US011672377B2

(12) **United States Patent**
Martin et al.

(10) **Patent No.: US 11,672,377 B2**
(45) **Date of Patent: *Jun. 13, 2023**

(54) **COOKING DEVICE AND COMPONENTS THEREOF**

(71) Applicant: **SHARKNINJA OPERATING LLC**, Needham, MA (US)

(72) Inventors: **Christopher T. Martin**, North Attleboro, MA (US); **Thomas Guerin**, Boston, MA (US); **Roger Neil Jackson**, Cornwall (GB); **Joshua D. Anthony**, North Billerica, MA (US); **Kerry Schwarz**, Needham, MA (US); **Michaela Dubeau**, Uxbridge, MA (US)

(73) Assignee: **SHARKNINJA OPERATING LLC**, Needham, MA (US)

(*) Notice: Subject to any disclaimer, the term of this patent is extended or adjusted under 35 U.S.C. 154(b) by 0 days.

This patent is subject to a terminal disclaimer.

(21) Appl. No.: **17/837,768**

(22) Filed: **Jun. 10, 2022**

(65) **Prior Publication Data**

US 2022/0296039 A1 Sep. 22, 2022

Related U.S. Application Data

(63) Continuation of application No. 17/219,238, filed on Mar. 31, 2021, now Pat. No. 11,389,026, which is a (Continued)

(51) **Int. Cl.**

A47J 37/06	(2006.01)
A47J 27/00	(2006.01)
A47J 27/12	(2006.01)

(52) **U.S. Cl.**
CPC ***A47J 37/0641*** (2013.01); ***A47J 27/004*** (2013.01); ***A47J 27/12*** (2013.01); ***A47J 37/0664*** (2013.01)

(58) **Field of Classification Search**
CPC A47J 37/0641; A47J 27/00; A47J 27/08; A47J 27/09; A47J 27/092; A47J 36/025;
(Continued)

(56) **References Cited**

U.S. PATENT DOCUMENTS

5,832,812 A 11/1998 Wolfe et al.
6,545,251 B2 4/2003 Allera et al.
(Continued)

FOREIGN PATENT DOCUMENTS

CN 202665302 U 1/2013
CN 105615640 A 6/2016
(Continued)

OTHER PUBLICATIONS

U.S. Appl. No. 17/159,414, filed Jan. 27, 2021, Cooking Device and Components Thereof.
(Continued)

Primary Examiner — Phuong T Nguyen
(74) *Attorney, Agent, or Firm* — Mintz Levin Cohn Ferris Glovsky and Popeo, PC

(57) **ABSTRACT**

A cooking system includes a housing having at least one internal compartment and a cooking container receivable within said at least one internal compartment. A cooking volume is defined within an interior of said cooking container. A bottom surface of said cooking container is angled upwardly. A heating element is associated with said at least one internal compartment.

22 Claims, 15 Drawing Sheets

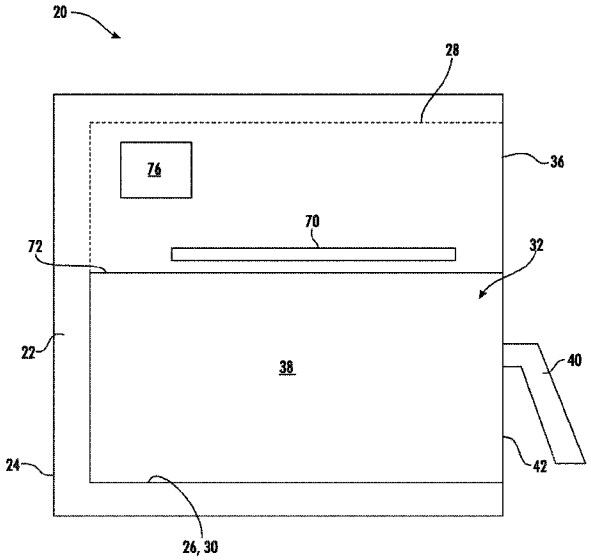

Related U.S. Application Data

continuation of application No. 17/159,414, filed as application No. PCT/US2020/042120 on Jul. 15, 2020.

(60) Provisional application No. 62/874,193, filed on Jul. 15, 2019.

(58) **Field of Classification Search**

CPC .. A47J 36/06; A47J 36/08; A47J 36/10; A47J 36/12; A47J 36/165; A47J 36/18; A47J 36/20; A47J 36/22; A47J 37/00; A47J 37/12; A47J 37/1204; A47J 37/1209; A47J 37/1214; A47J 37/1219; A47J 37/1266; A47J 37/1285; A47J 37/129; A47J 37/1295

USPC 99/324, 325, 330–343, 369, 400–418, 99/422, 425, 426, 430, 440, 444, 447, 99/448, 449, 451, 483, 495, 501

See application file for complete search history.

(56) **References Cited**

U.S. PATENT DOCUMENTS

6,593,552 B1 7/2003 Li
6,653,602 B2 11/2003 Li
6,758,206 B1 7/2004 Barnes et al.
6,761,159 B1 7/2004 Barnes et al.
6,878,904 B2 4/2005 Verveniotis
6,917,017 B2 7/2005 Moon et al.
7,064,297 B2 6/2006 Tidey
7,105,778 B1 9/2006 Delong et al.
7,105,779 B2 9/2006 Shei
7,117,866 B2 10/2006 Cantal
7,227,102 B2 6/2007 Shei
7,238,921 B2 7/2007 Beesley et al.
7,250,587 B2 7/2007 Ely et al.
7,250,588 B2 7/2007 Ely et al.
7,297,905 B2 11/2007 Kim et al.
7,328,654 B2 2/2008 Shei
7,339,140 B2 3/2008 Tidey
7,442,901 B2 10/2008 Kim et al.
7,703,389 B2 4/2010 McLemore et al.
8,006,685 B2 8/2011 Bolton et al.
8,035,062 B2 10/2011 McFadden et al.
8,096,231 B2 1/2012 Veltrop et al.
8,212,188 B2 7/2012 Kim et al.
8,217,314 B2 7/2012 Kim et al.
8,274,020 B2 9/2012 Donarski et al.
8,378,265 B2 2/2013 Greenwood et al.
8,389,907 B2 3/2013 Willett
8,404,292 B2 3/2013 Veltrop et al.
D688,513 S 8/2013 Garman
8,517,006 B2 8/2013 Frock et al.
D695,058 S 12/2013 Garman
8,640,608 B2 2/2014 Volatier
8,669,500 B2 3/2014 Hensel et al.
8,720,323 B2 5/2014 Douglas et al.
8,735,778 B2 5/2014 Greenwood et al.
8,748,783 B2 6/2014 Hensel et al.
8,883,234 B2 11/2014 Choi
8,895,902 B2 11/2014 Shei et al.
D724,890 S 3/2015 Molnar et al.
8,993,026 B2 3/2015 Molnar et al.
9,021,942 B2 5/2015 Lee et al.
9,072,403 B2 7/2015 Braden et al.
9,074,776 B2 7/2015 Greenwood et al.
9,080,774 B2 7/2015 Kim et al.
9,115,904 B2 8/2015 Bringe et al.
9,192,262 B2 11/2015 Kanbur et al.
9,314,134 B2 4/2016 Molnar
9,326,639 B2 5/2016 McKee et al.
9,351,495 B2 5/2016 Mcfadden
9,370,275 B2 6/2016 Jackson et al.
9,404,661 B2 8/2016 Kim et al.
9,433,321 B2 9/2016 Piazzi
9,462,912 B2 10/2016 Jackson et al.
9,480,364 B2 11/2016 Mckee et al.
9,482,437 B2 11/2016 Kemper
9,504,351 B2 11/2016 Cadima
9,534,791 B2 1/2017 Wie et al.
9,534,794 B2 1/2017 Rogers et al.
9,541,295 B2 1/2017 Adelmann et al.
9,568,200 B2 2/2017 Moon et al.
9,618,212 B2 4/2017 Schootstra et al.
9,635,979 B2 5/2017 Abrams et al.
9,661,952 B2 5/2017 Jackson et al.
9,668,615 B2 6/2017 Contarino, Jr.
9,671,114 B2 6/2017 Braden et al.
9,677,774 B2 6/2017 McKee et al.
9,681,773 B2 6/2017 McKee et al.
9,693,655 B2 7/2017 Shei et al.
9,702,564 B2 7/2017 Park et al.
9,723,954 B2 8/2017 Bringe et al.
9,746,189 B2 8/2017 Kantas
9,759,430 B2 9/2017 Jadhav et al.
9,759,432 B2 9/2017 Chung et al.
9,788,687 B2 10/2017 Frehn et al.
9,795,250 B2 10/2017 Huang
9,803,873 B2 10/2017 Rowley et al.
9,863,645 B2 1/2018 Adelmann et al.
9,874,354 B2 1/2018 Jadhav et al.
9,879,865 B2 1/2018 McKee et al.
9,900,936 B2 2/2018 Imm et al.
9,903,598 B2 2/2018 Greenwood et al.
9,974,312 B2 5/2018 McKee et al.
9,976,750 B1 5/2018 Kestner et al.
9,980,322 B1 5/2018 Kestner et al.
9,980,606 B2 5/2018 Marra
9,993,111 B2 6/2018 Thorndyke
10,045,651 B2 8/2018 Huang
10,051,997 B2 8/2018 Contarino, Jr.
10,088,173 B2 10/2018 Mckee et al.
10,094,576 B2 10/2018 Kim et al.
10,099,839 B2 10/2018 Schoning
10,101,038 B2 10/2018 Kim et al.
10,113,749 B2 10/2018 Yancey
10,143,324 B2 12/2018 Kataoka et al.
10,174,953 B2 1/2019 Jadhav et al.
10,190,783 B2 1/2019 Rogers et al.
10,203,117 B2 2/2019 Moon et al.
10,234,144 B2 3/2019 Deshpande
10,247,424 B2 4/2019 Adelmann et al.
10,271,686 B2 4/2019 Roy
10,271,690 B2 4/2019 Veltrop et al.
10,285,531 B2 5/2019 Chanowitz
10,309,659 B2 6/2019 Moon et al.
10,337,745 B2 7/2019 Mckee et al.
10,364,990 B2 7/2019 Lee
10,364,991 B2 7/2019 Kang et al.
10,383,477 B2 8/2019 Payen et al.
10,390,656 B2 8/2019 Gill et al.
10,405,696 B2 9/2019 Kim
10,405,697 B2 9/2019 Gill et al.
10,405,698 B2 9/2019 Gill et al.
10,405,699 B2 9/2019 Contarino, Jr.
10,413,121 B2 9/2019 Gill et al.
10,413,122 B2 9/2019 Gill et al.
10,426,176 B2 10/2019 Dixon et al.
10,448,785 B2 10/2019 Van Der Weij
10,448,786 B2 10/2019 Van Der Burg et al.
10,451,285 B2 10/2019 Dumenil
10,492,641 B2 12/2019 Kestner et al.
10,495,319 B2 12/2019 Lee et al.
10,495,320 B2 12/2019 Torrentes et al.
10,502,433 B2 12/2019 Park et al.
10,512,363 B2 12/2019 Kestner et al.
10,524,615 B2 1/2020 Reales Bertomeo et al.
10,598,391 B2 3/2020 Padula
10,619,862 B2 4/2020 Bruin-Slot et al.
10,627,116 B2 4/2020 Bruin-Slot et al.
10,638,882 B1 5/2020 He et al.
10,660,471 B2 5/2020 Kim et al.
10,674,853 B2 6/2020 Huang

(56) **References Cited**

U.S. PATENT DOCUMENTS

10,674,854	B2	6/2020	Huang	
10,684,022	B2	6/2020	McKee et al.	
10,694,753	B2	6/2020	Reese et al.	
10,694,882	B2	6/2020	Huang	
10,712,018	B2	7/2020	Adelmann et al.	
10,729,144	B2	8/2020	McKee et al.	
10,731,865	B2	8/2020	Jadhav et al.	
10,743,709	B2	8/2020	Nie	
10,743,710	B2	8/2020	Frehn et al.	
10,794,599	B2	10/2020	Jang et al.	
10,835,077	B2	11/2020	Nie	
10,841,981	B1	11/2020	Kestner et al.	
10,849,457	B2	12/2020	Bell	
10,852,002	B1	12/2020	Kestner et al.	
10,865,994	B2	12/2020	Lee et al.	
10,881,246	B2	1/2021	He et al.	
10,883,721	B2	1/2021	Paller	
10,887,952	B2	1/2021	Peterson	
10,890,336	B2	1/2021	Mckee et al.	
10,890,372	B2	1/2021	Hanning	
10,914,473	B2	2/2021	Kim et al.	
10,918,112	B2	2/2021	Bigott et al.	
10,920,992	B2	2/2021	Kobayashi et al.	
11,045,046	B1	6/2021	Man	
11,297,977	B1	4/2022	Man	
2009/0126580	A1*	5/2009	Hartfelder	A47J 39/006 99/483
2012/0272832	A1*	11/2012	Kwon	A21B 1/00 99/324
2012/0321770	A1	12/2012	Pelle	
2016/0029829	A1	2/2016	Klein	
2016/0209028	A1	7/2016	Jang	
2016/0220057	A1	8/2016	Smith et al.	
2017/0071408	A1	3/2017	Veltrop et al.	
2017/0079473	A1	3/2017	Bigott	
2017/0231430	A1	8/2017	Moon et al.	
2017/0245683	A1	8/2017	Chen et al.	
2017/0251859	A1	9/2017	Mundt	
2018/0073746	A1	3/2018	Jang et al.	
2018/0220500	A1	8/2018	Staton et al.	
2018/0220842	A1	8/2018	Delrue et al.	
2018/0255971	A1	9/2018	Moon et al.	
2018/0259194	A1	9/2018	Won et al.	
2018/0303285	A1	10/2018	Cheng	
2018/0352612	A1	12/2018	Hofleitner et al.	
2019/0045590	A1	2/2019	Kunimoto et al.	
2019/0063123	A1	2/2019	Ham et al.	
2019/0137111	A1	5/2019	Kobayashi et al.	
2019/0170368	A1	6/2019	Rogers et al.	
2019/0208956	A1	7/2019	Chen et al.	
2019/0239517	A1	8/2019	Mckee et al.	
2019/0242590	A1	8/2019	Colozzo et al.	
2019/0246835	A1	8/2019	Tsai	
2019/0246836	A1	8/2019	Du et al.	
2019/0246841	A1	8/2019	Veltrop et al.	
2019/0254473	A1	8/2019	Anthony et al.	
2019/0254474	A1	8/2019	Anthony et al.	
2019/0254476	A1	8/2019	Anthony et al.	
2019/0254479	A1	8/2019	De' Longhi et al.	
2019/0269276	A1	9/2019	Gvili	
2019/0282029	A1	9/2019	Goldberg	
2019/0290062	A1	9/2019	Prieto et al.	
2019/0290072	A1	9/2019	Prieto et al.	
2019/0298104	A1	10/2019	Balsamo et al.	
2019/0298105	A1	10/2019	Floessholzer	
2019/0298106	A1	10/2019	Cichosz	
2019/0307291	A1	10/2019	De' Longhi et al.	
2019/0309955	A1	10/2019	Castillo et al.	
2019/0313846	A1	10/2019	Abukashef	
2019/0313847	A1	10/2019	Chun et al.	
2019/0328175	A1	10/2019	Bancroft	
2019/0380533	A1	12/2019	Lien	
2020/0033009	A1	1/2020	Lee et al.	
2020/0033010	A1	1/2020	Kang et al.	
2020/0072475	A1	3/2020	Crow et al.	
2020/0132309	A1	4/2020	Oh et al.	
2020/0138238	A1	5/2020	Gromowski et al.	
2020/0138239	A1	5/2020	Gromowski et al.	
2020/0149746	A1	5/2020	Lee et al.	
2020/0182484	A1	6/2020	Cowan et al.	
2020/0187708	A1	6/2020	Samonigg et al.	
2020/0187710	A1	6/2020	Guo et al.	
2020/0200393	A1	6/2020	Goldberg et al.	
2020/0200394	A1	6/2020	Bruin-Slot et al.	
2020/0200395	A1	6/2020	Klok	
2020/0208844	A1	7/2020	Bruin-Slot et al.	
2020/0229276	A1	7/2020	Kim et al.	
2020/0268200	A1	8/2020	Anthony et al.	
2020/0288725	A1	9/2020	Ten Dam	
2020/0309379	A1	10/2020	Paller	
2020/0323222	A1	10/2020	Reese et al.	
2020/0329908	A1	10/2020	Chen	
2020/0329909	A1	10/2020	Conrad et al.	
2020/0345173	A1	11/2020	Reales Bertomeo	
2020/0352385	A1	11/2020	Home	
2020/0378609	A1	12/2020	Paller	
2020/0383512	A1	12/2020	Ito et al.	

FOREIGN PATENT DOCUMENTS

CN	205849310	U	1/2017
CN	206080273	U	4/2017
CN	206675433	U	11/2017
CN	209032019	U	6/2019
WO	2019092346	A1	5/2019
WO	2019092347	A1	5/2019
WO	2019129598	A1	7/2019
WO	2019153512	A1	8/2019
WO	2019157848	A1	8/2019
WO	2019207325	A1	10/2019
WO	2020016085	A1	1/2020
WO	2020033980	A1	2/2020
WO	2020043427	A1	3/2020
WO	2020077606	A1	4/2020
WO	2020098748	A1	5/2020
WO	2020108917	A1	6/2020
WO	2020113990	A1	6/2020
WO	2020118993	A1	6/2020
WO	2020125025	A1	6/2020
WO	2020148164	A1	7/2020
WO	2020148187	A1	7/2020
WO	2020168202	A1	8/2020
WO	2020174329	A1	9/2020
WO	2020233111	A1	11/2020
WO	2021005543	A1	1/2021

OTHER PUBLICATIONS

U.S. Appl. No. 17/219,238, filed Mar. 31, 2021, Cooking Device and Components Thereof.

International Search Report and Written Opinion received for PCT Patent International Application No. PCT/US2020/042120, dated Oct. 30, 2020, 14 pages.

* cited by examiner

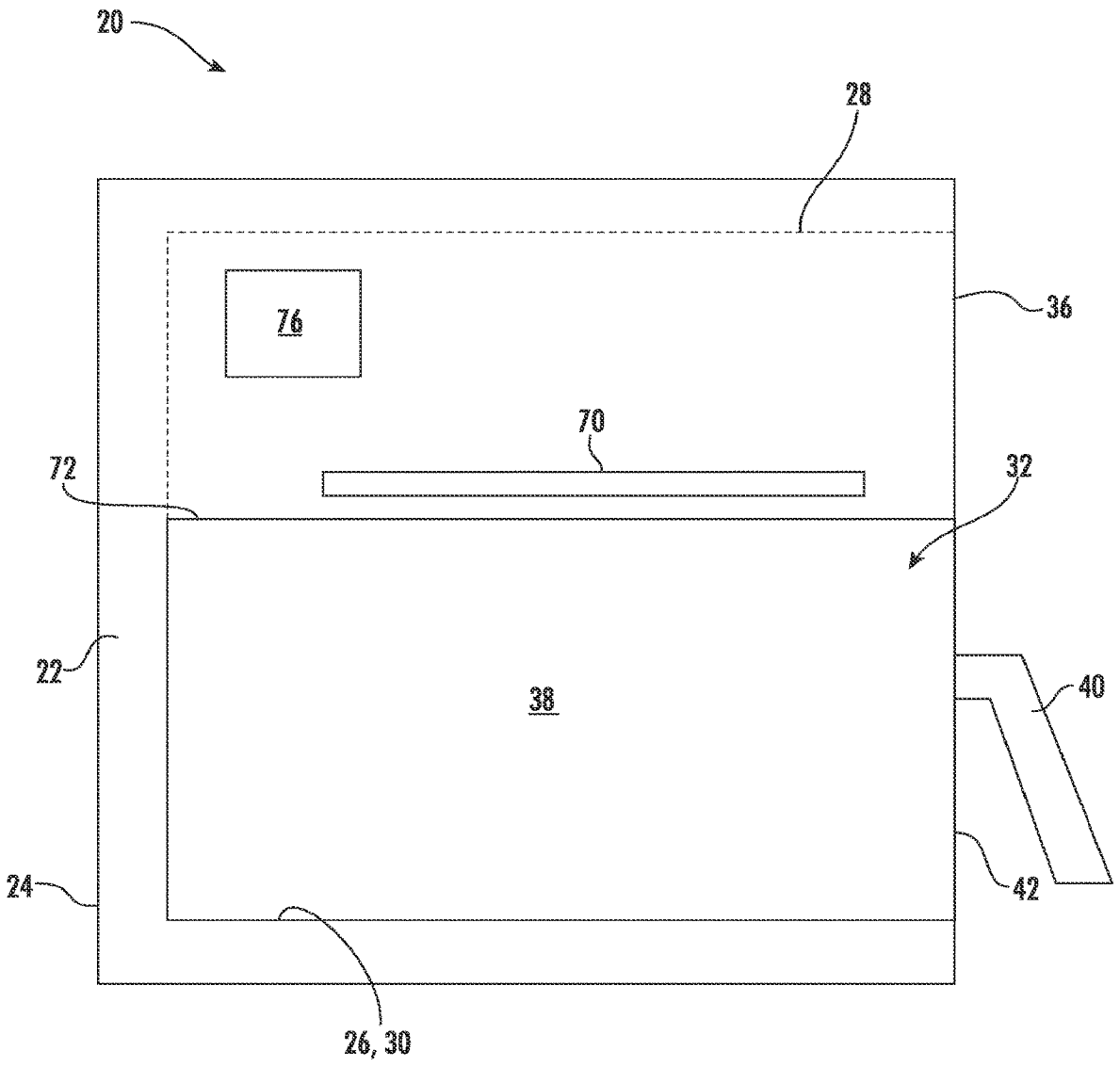

FIG. 1

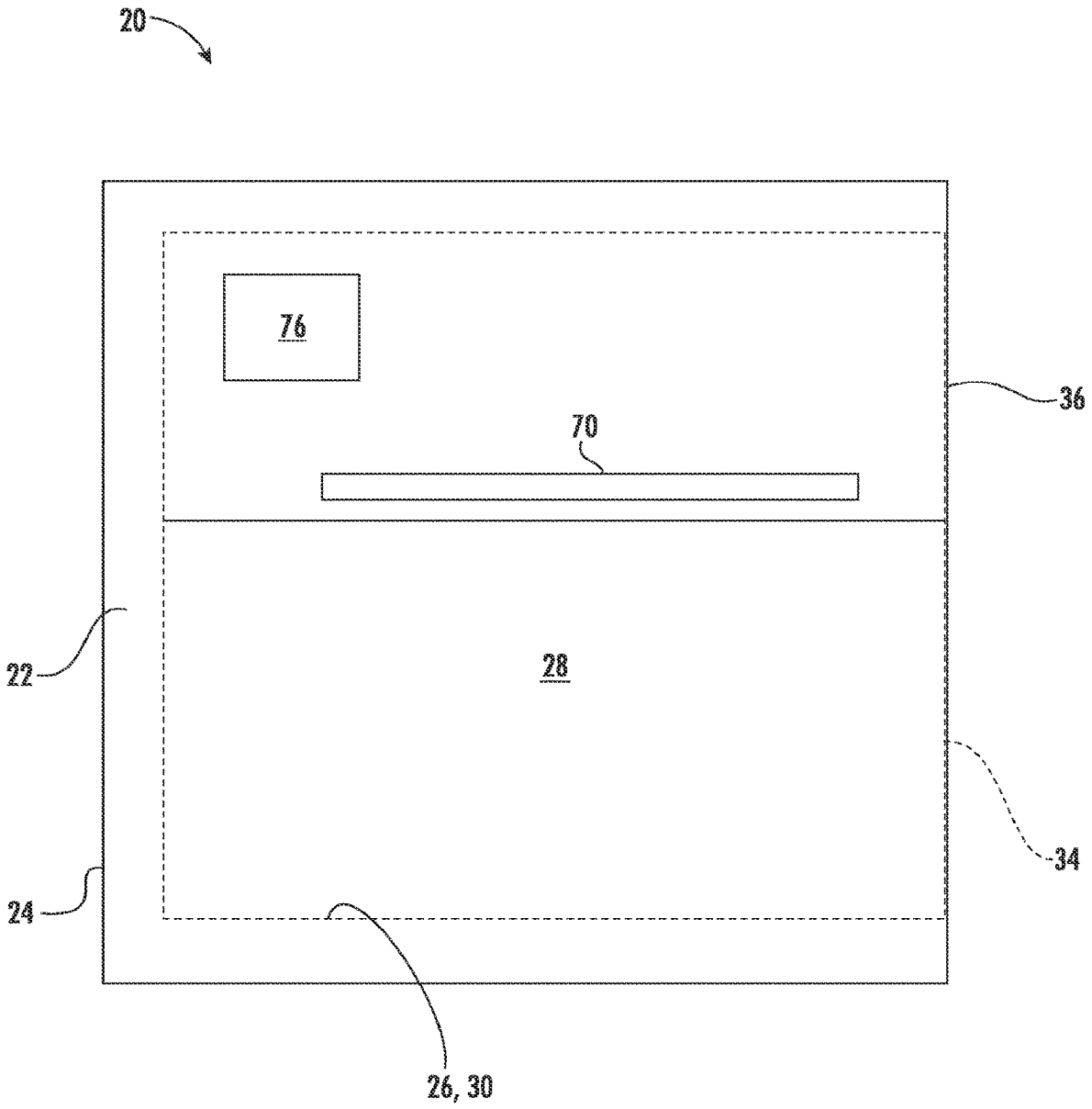

FIG. 2

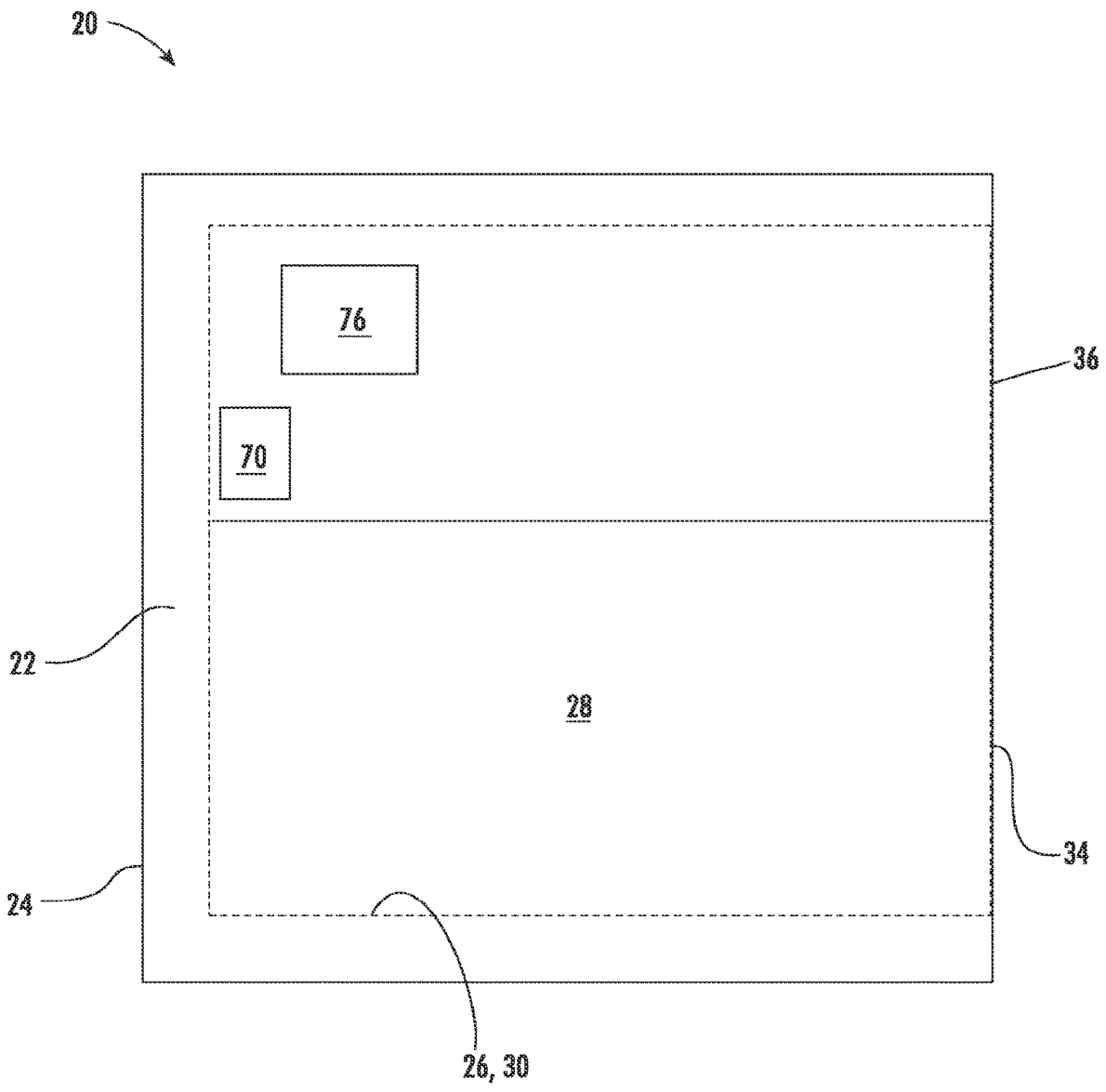

FIG. 3

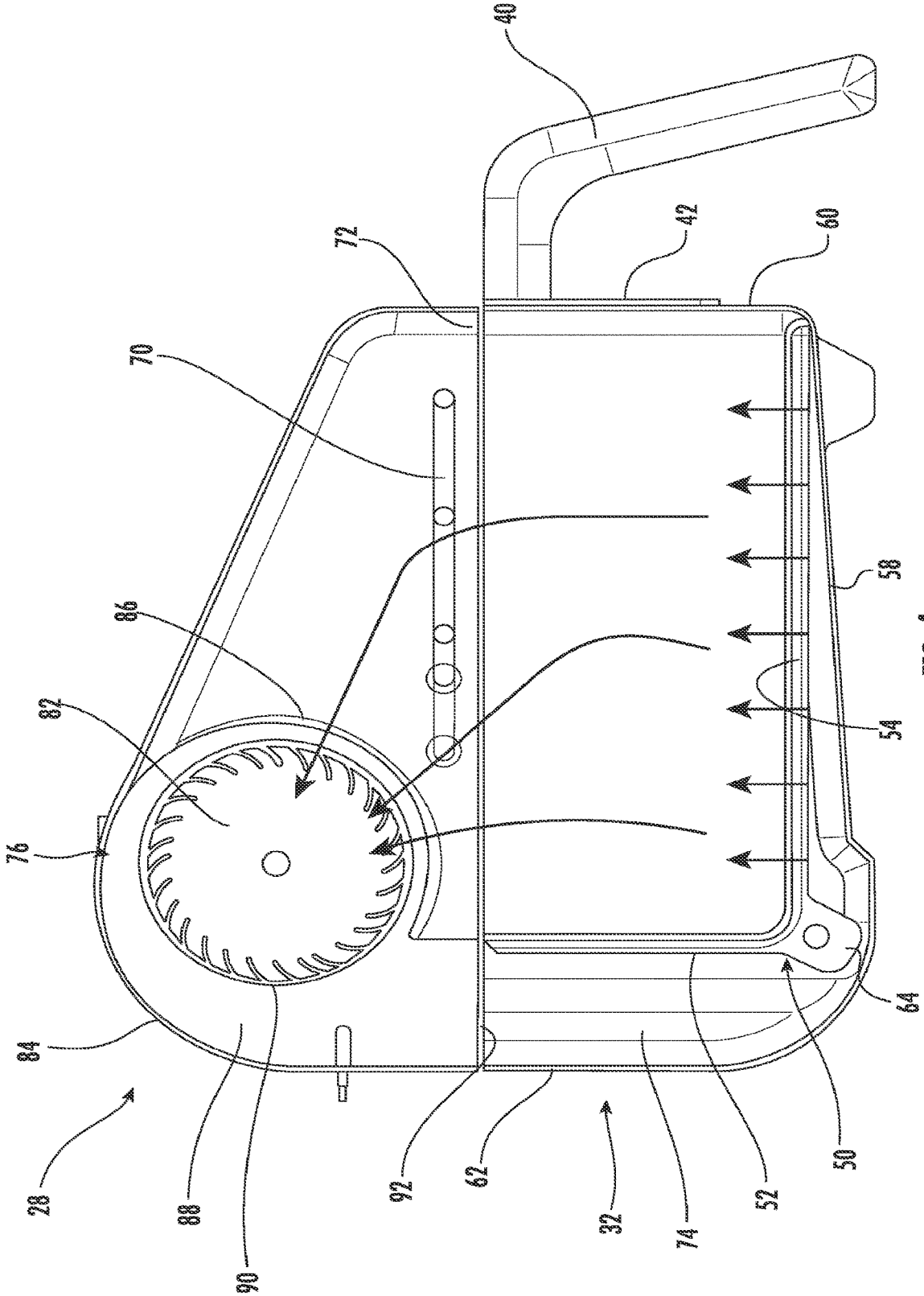

FIG. 4

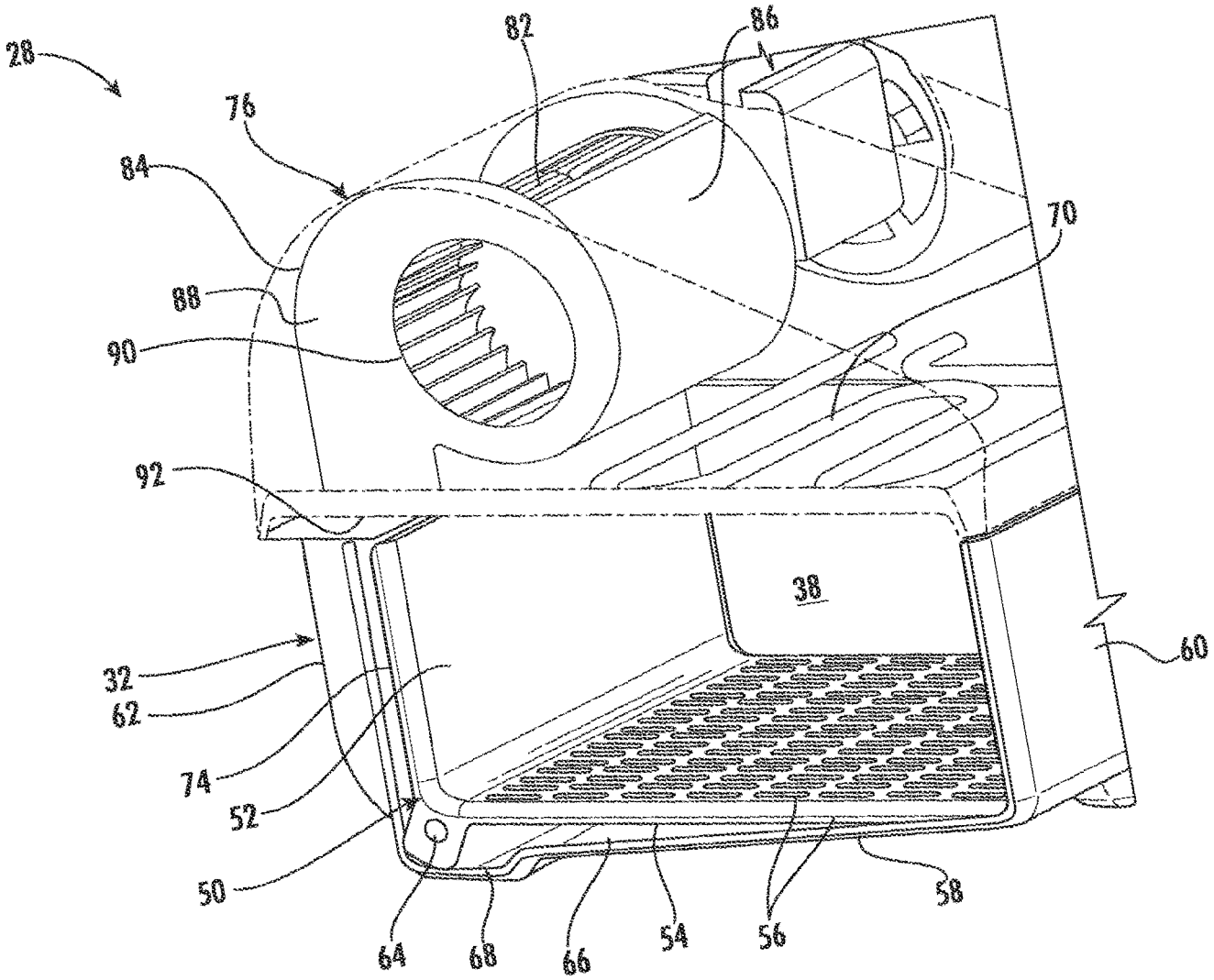

FIG. 5

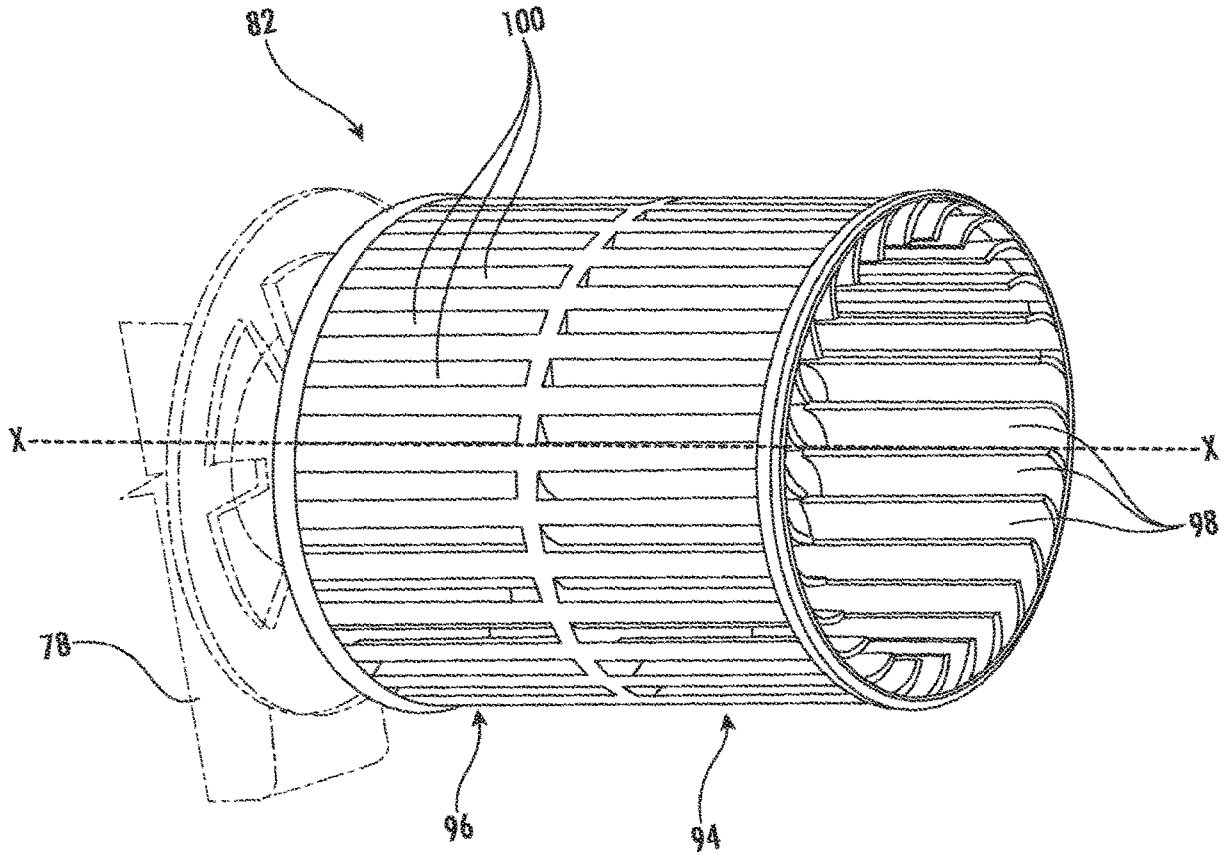

FIG. 6

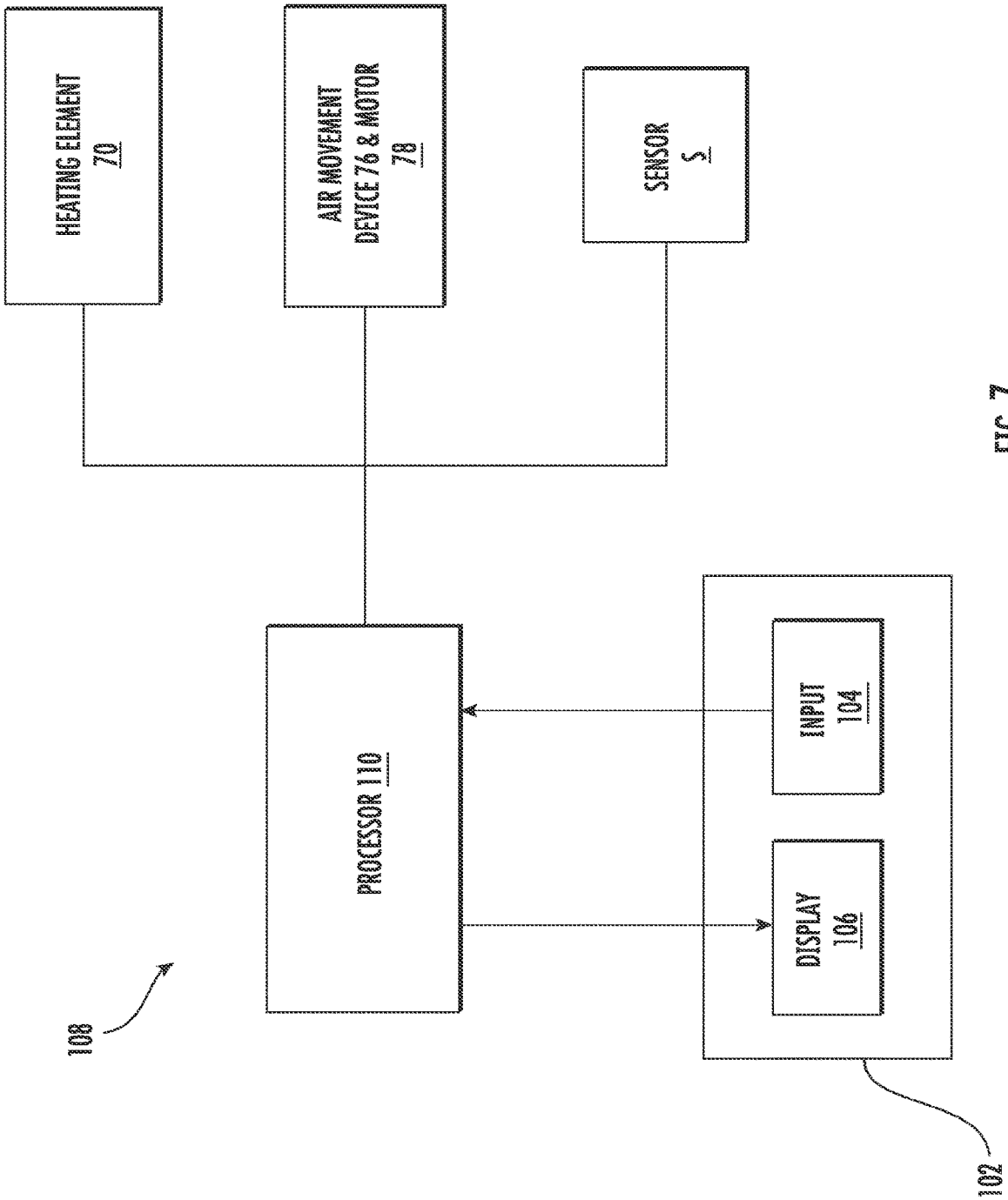
HEATING ELEMENT
70
AIR MOVEMENT
DEVICE 76 & MOTOR
78
SENSOR
S
PROCESSOR 110
INPUT
104
DISPLAY
106
108
102

FIG. 7

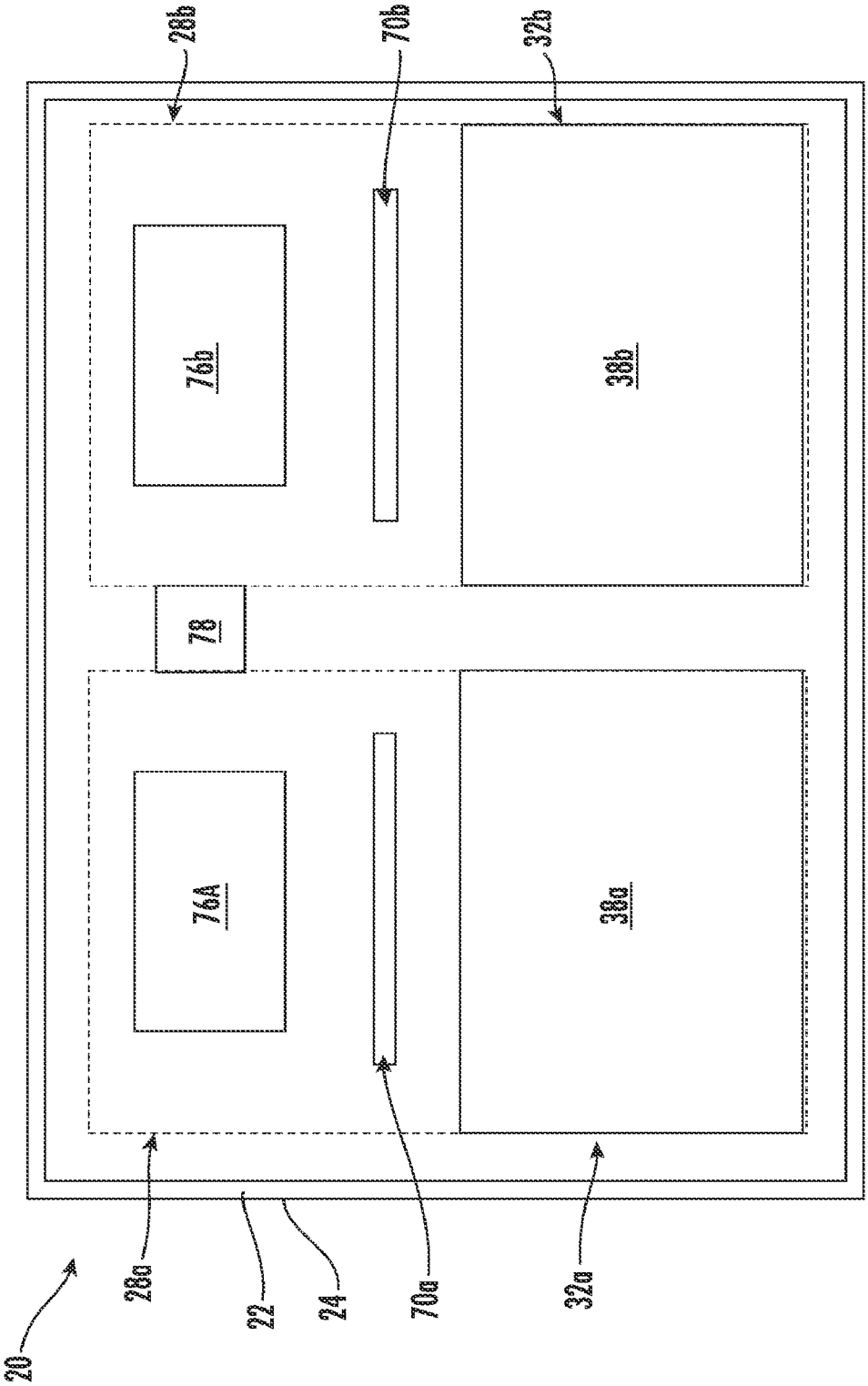

FIG. 8

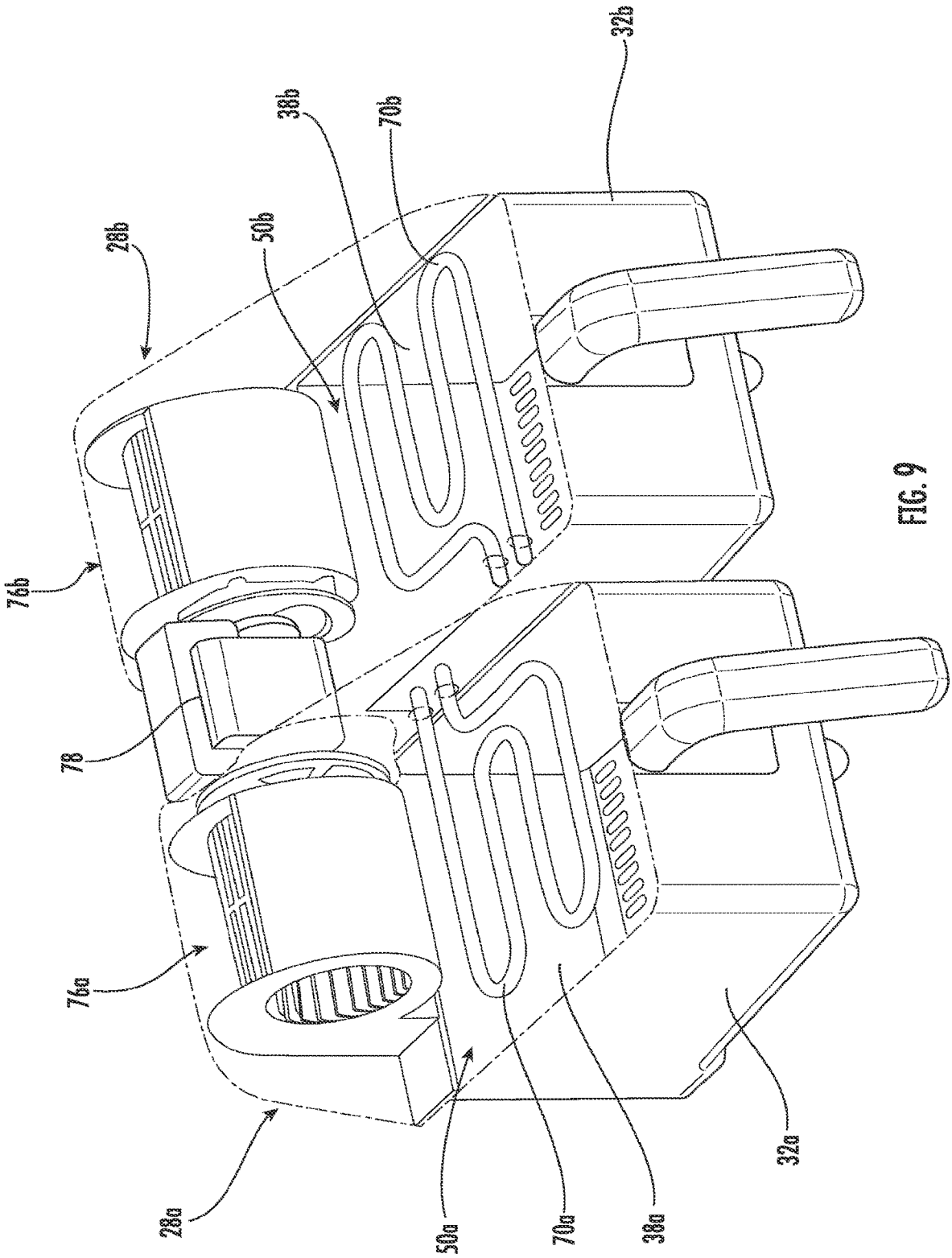

FIG. 9

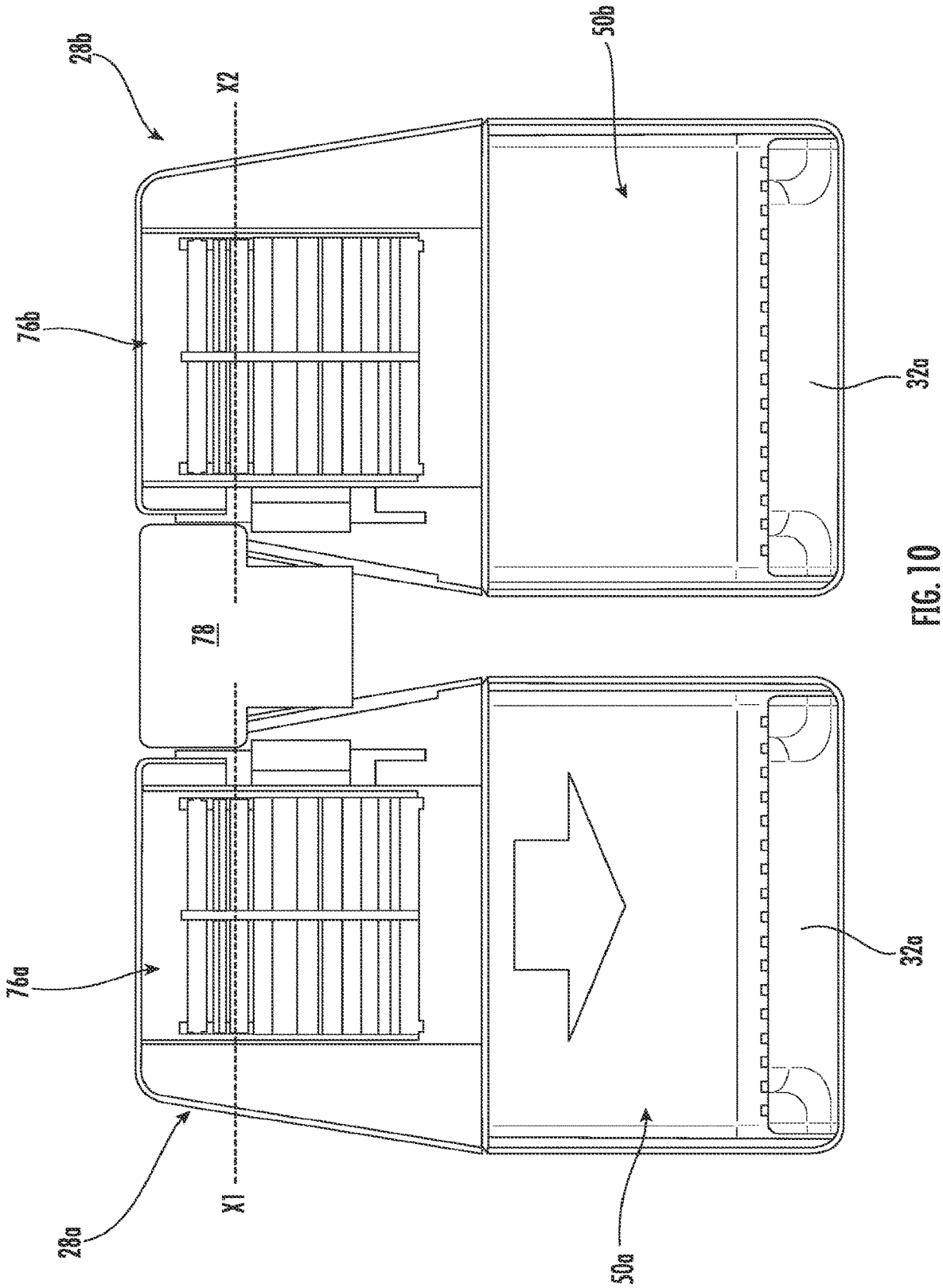

FIG. 10

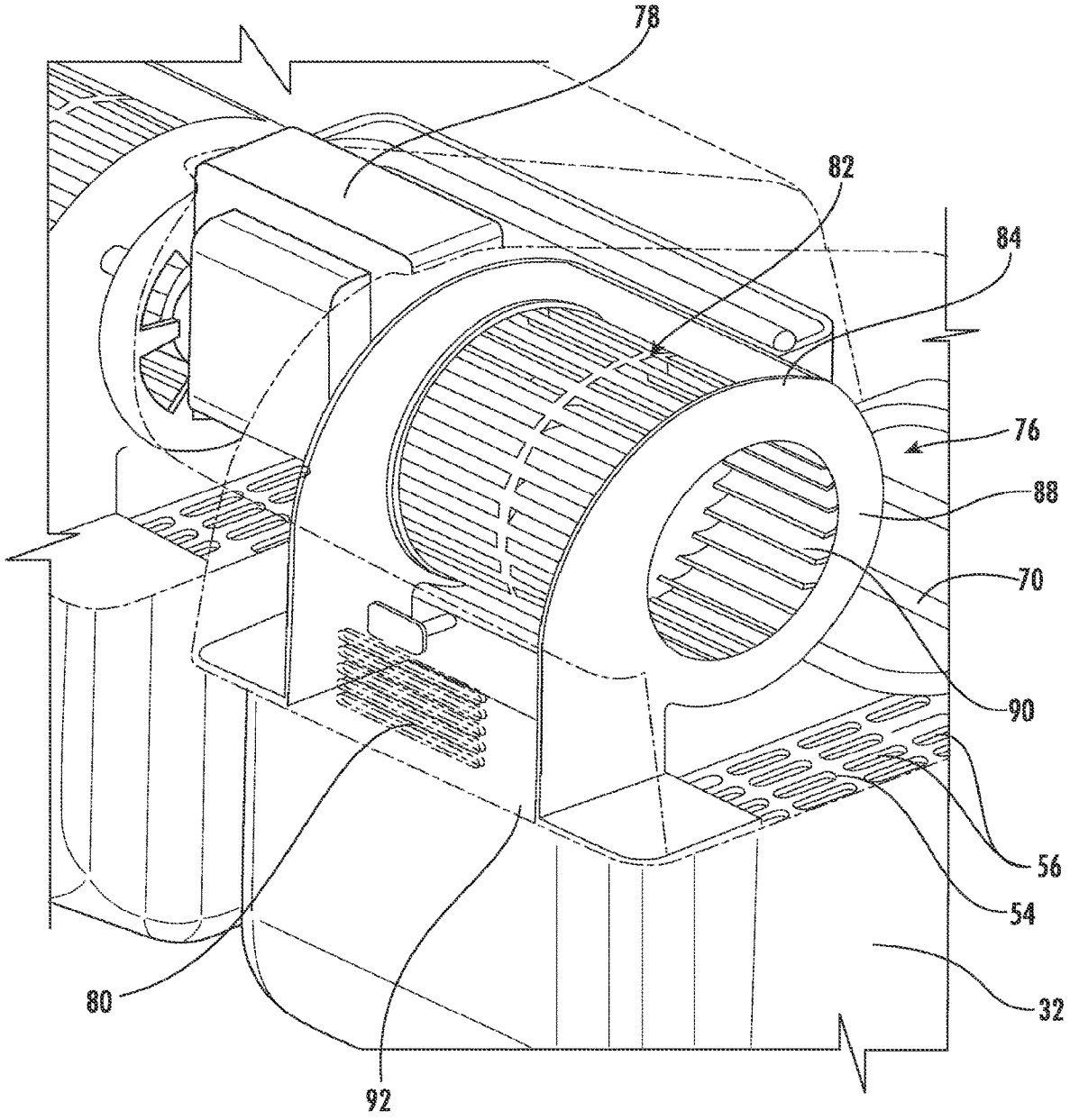

FIG. 11

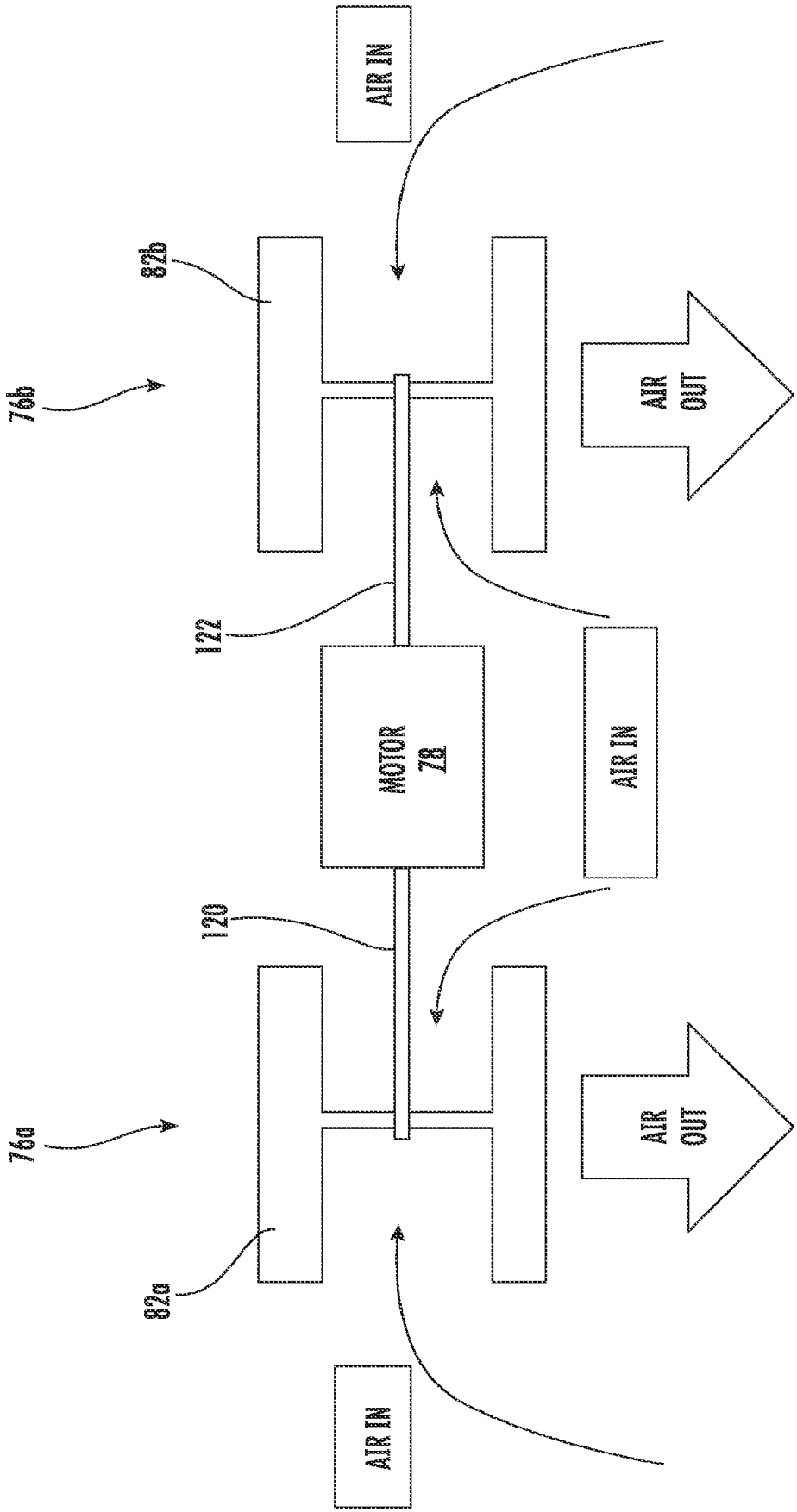
AIR IN
82b
76b
AIR OUT
122
MOTOR 78
AIR IN
120
76a
AIR OUT
82a
AIR IN

FIG. 12

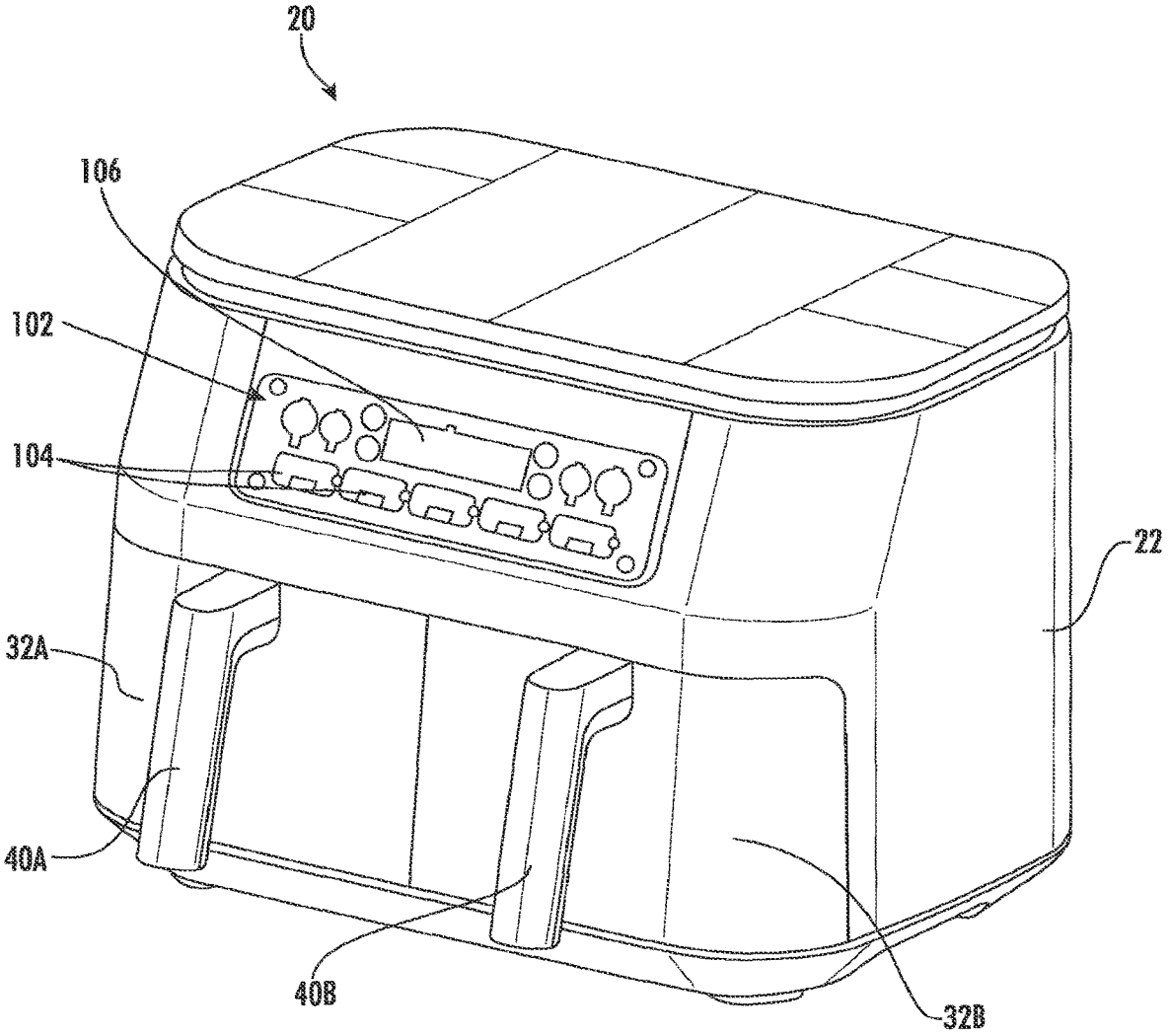

FIG. 13

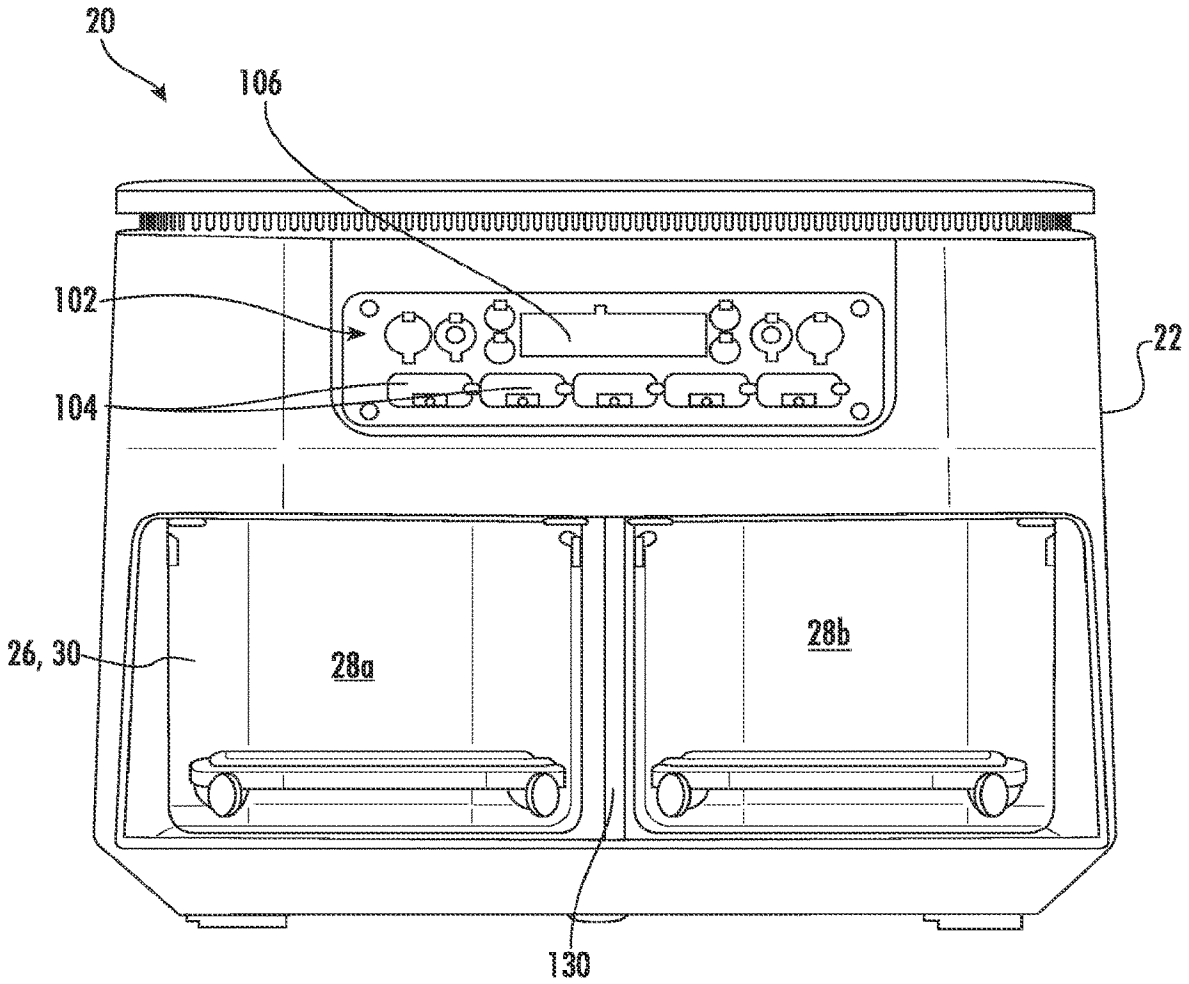

FIG. 14

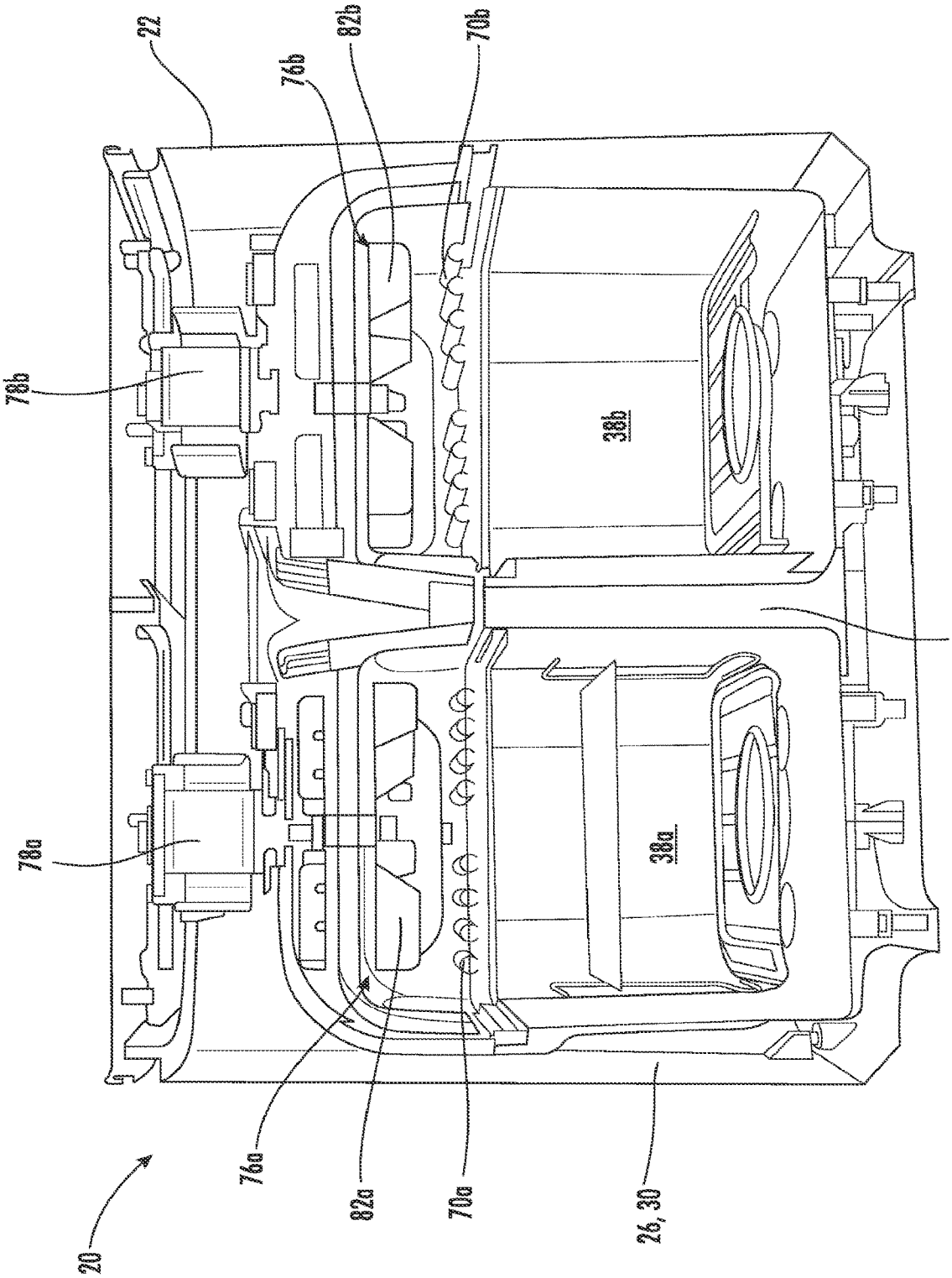

FIG. 15

COOKING DEVICE AND COMPONENTS THEREOF

CROSS-REFERENCE TO RELATED APPLICATIONS

This application is a continuation of U.S. patent application Ser. No. 17/219,238, filed on Mar. 31, 2021, and entitled "Cooking Device and Components Thereof," which is a continuation of U.S. application Ser. No. 17/159,414, filed Jan. 27, 2021, and entitled "Cooking Device and Components Thereof," which is a 371 U.S. National Stage application of PCT/US2020/042120, filed Jul. 15, 2020, which claims the benefit of U.S. Provisional Application No. 62/874,193, filed Jul. 15, 2019, each of which is hereby incorporated by reference herein in their entireties.

BACKGROUND

Embodiments of the present disclosure relate generally to a cooking system, and more specifically, to a countertop cooking system operable in a plurality of distinct cooking modes.

SUMMARY

According to an embodiment, cooking system includes a housing having at least one internal compartment and a cooking container receivable within said at least one internal compartment. A cooking volume is defined within an interior of said cooking container. A bottom surface of said cooking container is angled upwardly. A heating element is associated with said at least one internal compartment.

In addition to one or more of the features described above, or as an alternative, in further embodiments said bottom surface of said cooking container is oriented at an angle to a surface for supporting the cooking system.

In addition to one or more of the features described above, or as an alternative, in further embodiments said bottom surface of said cooking container is not orthogonal to a back wall of said cooking container.

In addition to one or more of the features described above, or as an alternative, in further embodiments said cooking container includes a front wall and a back wall, and a height of said cooking container adjacent said back wall of said cooking container is greater than a height of said cooking container adjacent said front wall of said cooking container.

In addition to one or more of the features described above, or as an alternative, in further embodiments comprising an insert positionable within said interior of said cooking container, said insert including a food support surface having at least one opening formed therein.

In addition to one or more of the features described above, or as an alternative, in further embodiments said insert at least partially defines said cooking volume within said interior of said cooking container.

In addition to one or more of the features described above, or as an alternative, in further embodiments said food support surface has a generally horizontal orientation when said insert is arranged within said interior of said cooking container.

In addition to one or more of the features described above, or as an alternative, in further embodiments said food support surface is offset from said bottom surface of said cooking container by a clearance.

In addition to one or more of the features described above, or as an alternative, in further embodiments said clearance defined between said food support surface and said bottom surface of said cooking container varies over at least one dimension of the cooking container.

In addition to one or more of the features described above, or as an alternative, in further embodiments said insert further comprises at least one protrusion and said bottom surface of said cooking container further comprises at least one channel, said at least one protrusion being positioned within said at least one channel when said insert is properly installed in said interior of said cooking container.

In addition to one or more of the features described above, or as an alternative, in further embodiments an air duct separate from said cooking volume is defined between said insert and a portion of said cooking container.

In addition to one or more of the features described above, or as an alternative, in further embodiments said insert further comprises a blocking wall arranged at an angle to said food support surface and said air duct is defined between said blocking wall and a back wall of said cooking container.

In addition to one or more of the features described above, or as an alternative, in further embodiments comprising an air movement mechanism disposed in said housing.

In addition to one or more of the features described above, or as an alternative, in further embodiments comprising a motor operable to rotate said air movement mechanism about an axis of rotation, wherein said motor is located at least partially external to said at least one internal compartment.

In addition to one or more of the features described above, or as an alternative, in further embodiments said air movement mechanism further comprises a fan housing having a first inlet, a second inlet and an outlet, the first inlet and the second inlet being arranged in fluid communication with said outlet and a fan wheel rotatably mounted within said fan housing.

In addition to one or more of the features described above, or as an alternative, in further embodiments said fan wheel includes a first wheel portion having a first plurality of impeller blades and a second wheel portion having a second plurality of impeller blades.

According to an embodiment, a cooking system includes a housing having at least one internal compartment, a cooking container receivable within said at least one internal compartment, a cooking volume being defined within an interior of said cooking container, and a heating element associated with said at least one internal compartment. An air movement mechanism is disposed in said housing. The air movement mechanism is rotatable about an axis of rotation oriented relatively horizontally.

In addition to one or more of the features described above, or as an alternative, in further embodiments said axis of rotation is oriented substantially perpendicular to a flow provided at an outlet of said air movement mechanism towards a relative bottom of said housing.

In addition to one or more of the features described above, or as an alternative, in further embodiments said cooking container is movable relative to said housing along an axis of translation, and said axis of rotation is oriented perpendicularly to said axis of translation.

In addition to one or more of the features described above, or as an alternative, in further embodiments said air movement mechanism includes a first inlet, a second inlet, and an outlet, said first inlet and said second inlet being arranged in fluid communication with said outlet.

In addition to one or more of the features described above, or as an alternative, in further embodiments an air duct

separate from said cooking volume is defined within said cooking container, and said outlet of said air movement mechanism is aligned with said air duct.

In addition to one or more of the features described above, or as an alternative, in further embodiments comprising a motor operable to rotate said air movement mechanism about said axis or rotation, wherein said motor is located at least partially external to said at least one internal compartment.

In addition to one or more of the features described above, or as an alternative, in further embodiments said air movement mechanism further comprises a fan housing and a fan wheel rotatably mounted within said fan housing.

In addition to one or more of the features described above, or as an alternative, in further embodiments said fan wheel includes a first wheel portion having a first plurality of impeller blades and a second wheel portion having a second plurality of impeller blades.

In addition to one or more of the features described above, or as an alternative, in further embodiments a configuration of said first plurality of impeller blades is substantially identical to a configuration of said second plurality of impeller blades.

In addition to one or more of the features described above, or as an alternative, in further embodiments a configuration of said first plurality of impeller blades is different than a configuration of said second plurality of impeller blades.

In addition to one or more of the features described above, or as an alternative, in further embodiments said air movement mechanism is disposed vertically above said cooking volume.

In addition to one or more of the features described above, or as an alternative, in further embodiments said air movement mechanism is disposed vertically above said cooking container.

In addition to one or more of the features described above, or as an alternative, in further embodiments an insert positionable within said interior of said cooking container, wherein a portion of said air movement mechanism is disposed in vertical alignment with said insert.

In addition to one or more of the features described above, or as an alternative, in further embodiments said air movement mechanism is horizontally offset from said heating element.

According to an embodiment, a cooking system includes a housing having at least one internal compartment, and a cooking container receivable within said at least one internal compartment. A cooking volume is defined within an interior of said cooking container. A heating element associated with said cooking volume. A rotatable air movement mechanism has a first inlet arranged in a first plane of said air movement mechanism and a second inlet arranged in a second plane of said air movement mechanism, said second plane being distinct from said first plane. An outlet of the air movement mechanism is arranged in fluid communication with both said first inlet and said second inlet.

In addition to one or more of the features described above, or as an alternative, in further embodiments said air movement mechanism is rotatable about an axis of rotation and during operation of said air movement mechanism, said first inlet and said second inlet being fixed relative to said axis of rotation.

In addition to one or more of the features described above, or as an alternative, in further embodiments said cooking container is movable relative to said housing along an axis of translation, and said axis of rotation is oriented perpendicularly to said axis of translation.

In addition to one or more of the features described above, or as an alternative, in further embodiments said first plane and said second plane are substantially parallel.

In addition to one or more of the features described above, or as an alternative, in further embodiments said first plane is defined at a first side of said air movement mechanism and said second plane is defined at a second side of said air movement mechanism.

In addition to one or more of the features described above, or as an alternative, in further embodiments said second side is opposite said first side.

In addition to one or more of the features described above, or as an alternative, in further embodiments an air duct separate from said cooking volume is defined within said cooking container, and said outlet of said air movement mechanism is aligned with said air duct.

In addition to one or more of the features described above, or as an alternative, in further embodiments comprising a motor operable to rotate said air movement mechanism about an axis or rotation, wherein said motor is located at least partially external to said at least one internal compartment.

In addition to one or more of the features described above, or as an alternative, in further embodiments said air movement mechanism further comprises a fan housing and a fan wheel rotatably mounted within said fan housing.

In addition to one or more of the features described above, or as an alternative, in further embodiments said fan wheel includes a first wheel portion having a first plurality of impeller blades and a second wheel portion having a second plurality of impeller blades.

In addition to one or more of the features described above, or as an alternative, in further embodiments said air movement mechanism is positioned vertically above at least one of said cooking volume and said cooking container.

In addition to one or more of the features described above, or as an alternative, in further embodiments comprising an insert positionable within said interior of said cooking container, wherein a portion of said air movement mechanism is disposed in vertical alignment with said insert.

In addition to one or more of the features described above, or as an alternative, in further embodiments said air movement mechanism is horizontally offset from said heating element.

According to yet another embodiment, a cooking system includes a housing having at least one internal compartment and a cooking container receivable within said at least one internal compartment. A cooking volume is defined within an interior of said cooking container. A heating element is associated with said cooking volume. A plurality of air movement mechanism is disposed within said housing and a motor is operably coupled to said plurality of air movement mechanisms.

In addition to one or more of the features described above, or as an alternative, in further embodiments said motor is located externally to said at least one internal compartment.

In addition to one or more of the features described above, or as an alternative, in further embodiments said plurality of air movement mechanisms includes a first air movement mechanism and a second air movement mechanism.

In addition to one or more of the features described above, or as an alternative, in further embodiments said motor includes a first output shaft and a second output shaft, said first air movement mechanism being operably coupled to said first output shaft and said second air movement mechanism being operably coupled to said second output shaft.

In addition to one or more of the features described above, or as an alternative, in further embodiments said first air movement mechanism and a second air movement mechanism are arranged coaxially.

In addition to one or more of the features described above, or as an alternative, in further embodiments said motor operates said first air movement mechanism at a first speed and said motor operates said second air movement mechanism at a second speed, said first speed and said second speed being substantially identical.

In addition to one or more of the features described above, or as an alternative, in further embodiments said motor operates said first air movement mechanism at a first speed and said motor operates said second air movement mechanism at a second speed, said first speed being different than said second speed.

In addition to one or more of the features described above, or as an alternative, in further embodiments said at least one internal compartment includes a first internal compartment and a second internal compartment, said first internal compartment being fluidly separate from said second internal compartment.

In addition to one or more of the features described above, or as an alternative, in further embodiments said first air movement mechanism is positioned within said first internal compartment and said second air movement mechanism is positioned within said second internal compartment.

In addition to one or more of the features described above, or as an alternative, in further embodiments said motor is positioned between said first internal compartment and said second internal compartment.

According to yet another embodiment, a cooking system includes a housing having at first internal compartment and a second internal compartment. At least one cooking container is receivable within one of said first internal compartment and said second internal compartment. At least one cooking volume is defined within an interior of said at least one cooking container. At least one heating element disposed in said housing.

In addition to one or more of the features described above, or as an alternative, in further embodiments said at least one cooking container is a first cooking container receivable within said first internal compartment and a second cooking container receivable within said second internal compartment, wherein a first cooking volume is defined within an interior of said first cooking container and a second cooking volume is defined within an interior of said second cooking container.

In addition to one or more of the features described above, or as an alternative, in further embodiments said at least one heating element includes a first heating element positioned within said first internal compartment and a second heating element positioned within said second internal compartment.

In addition to one or more of the features described above, or as an alternative, in further embodiments comprising at least one air movement mechanism disposed within said housing.

In addition to one or more of the features described above, or as an alternative, in further embodiments said at least one air movement mechanism is stacked vertically relative to said at least one heating element within said housing.

In addition to one or more of the features described above, or as an alternative, in further embodiments said at least one air movement mechanism includes a first inlet, a second inlet, and an outlet, said first inlet and said second inlet being arranged in fluid communication with said outlet.

In addition to one or more of the features described above, or as an alternative, in further embodiments said at least one air movement mechanism further comprises: a fan housing and a fan wheel rotatably mounted within said fan housing.

In addition to one or more of the features described above, or as an alternative, in further embodiments said fan wheel includes a first wheel portion having a first plurality of impeller blades and a second wheel portion having a second plurality of impeller blades.

In addition to one or more of the features described above, or as an alternative, in further embodiments said at least one air movement mechanism includes a first air movement mechanism associated with said first internal compartment and a second air movement mechanism associated with said second internal compartment.

In addition to one or more of the features described above, or as an alternative, in further embodiments said at least one air movement mechanism has an axially oriented inlet and a radially oriented outlet.

In addition to one or more of the features described above, or as an alternative, in further embodiments said at least one air movement mechanism is rotatable about a vertically oriented axis.

In addition to one or more of the features described above, or as an alternative, in further embodiments comprising a motor operably coupled to said at least one air movement mechanism.

In addition to one or more of the features described above, or as an alternative, in further embodiments said motor is located externally from said first internal compartment and said second internal compartment.

In addition to one or more of the features described above, or as an alternative, in further embodiments said motor is positioned between said first internal compartment and said second internal compartment.

In addition to one or more of the features described above, or as an alternative, in further embodiments said first cooking container and said second cooking container are individually insertable into said first cooking compartment and said second cooking compartment respectively.

In addition to one or more of the features described above, or as an alternative, in further embodiments said first internal compartment and said second internal compartment are fluidly separate.

In addition to one or more of the features described above, or as an alternative, in further embodiments said first cooking volume and said second cooking volume are fluidly separate.

According to another embodiment, a cooking system includes a housing having at least one internal compartment and a cooking container receivable within said at least one internal compartment. A cooking volume is defined within an interior of said cooking container. A heating element is associated with said at least one internal compartment and an air movement mechanism is disposed in said housing. The air movement mechanism is positioned vertically above said cooking volume and horizontally offset from said heating element.

BRIEF DESCRIPTION OF THE FIGURES

The accompanying drawings incorporated in and forming a part of the specification embodies several aspects of the present disclosure and, together with the description, serves to explain the principles of the disclosure. In the drawings:

FIG. **1** is a schematic diagram of a cooking system having a cooking container installed therein according to an embodiment;

FIG. **2** is a schematic diagram of the cooking system of FIG. **1** absent the cooking container according to an embodiment;

FIG. **3** is a schematic diagram of another cooking system absent the cooking container according to an embodiment;

FIG. **4** is a cross-sectional view of a portion of a cooking system according to an embodiment;

FIG. **5** is a perspective view of a portion of a cooking system according to an embodiment;

FIG. **6** is a perspective view of a fan wheel of an air movement mechanism of the cooking system according to an embodiment;

FIG. **7** is a schematic diagram of a control system of the cooking system according to an embodiment;

FIG. **8** is a front perspective view of a portion of the cooking system according to another embodiment;

FIG. **9** is a front view of the portion of the cooking system of FIG. **8** according to an embodiment;

FIG. **10** is a rear perspective view of the portion of the cooking system of FIG. **8** according to an embodiment;

FIG. **11** is a perspective view of a motor of the cooking system of FIG. **8** according to an embodiment;

FIG. **12** is a schematic diagram of the motor and the air movement mechanisms of the cooking system according to an embodiment;

FIG. **13** is a perspective view of the cooking system according to another embodiment;

FIG. **14** is a plan view of the cooking system of FIG. **13**, with the cooking containers removed according to an embodiment; and

FIG. **15** is a perspective cross-sectional view of the cooking system of FIG. **13** according to an embodiment.

DETAILED DESCRIPTION

With reference now to the FIGS., an example of a cooking system **20** is illustrated at numeral **20**. As best shown in FIGS. **1** and **2**, the cooking system **20** includes a housing **22** having an exterior heat resistant or non-conductive surface **24** and an interior surface **26** that defines an at least partially hollow compartment **28** arranged within an interior of the housing **22**. The housing **22** may be formed as a single unitary body, or alternatively, may be formed by connecting a plurality of pieces together. In addition, the housing **22** may be made of any suitable material, including but not limited to glass, aluminum, plastic, or stainless steel for example. A liner **30** may be disposed within at least a portion of the housing **22**. The liner **30** may be formed from any suitable conductive material, such as aluminum for example. In an embodiment, the liner **30** forms at least a portion of the interior surface **26** and thereby defines at least a portion of the internal compartment **28** of the housing **22**. However, it should be understood that other components of the cooking system **20**, or surfaces thereof, may also define the internal compartment **28**.

A cooking container **32** is receivable within a portion of the internal compartment **28** of the housing **22**, such as a bottom portion of the internal compartment **28** for example. Although the cooking container **32** is described herein as being separable from the housing **22**, embodiments where the cooking container **32** is movably connected with or integrally formed with the housing **22** are also contemplated herein. The cooking container **32** may be a pot formed from a ceramic, metal, or die cast aluminum material. However, any suitable material capable of withstanding the high temperatures required for cooking food products are also within the scope of the disclosure. In an embodiment, the cooking container **32** is configured to translate along an axis relative to the housing **22** such that the cooking container **32** is slidably received within an opening **34** formed in a wall **36** of the housing **22**. Accordingly, in such embodiments, a size and shape of the cooking container **32** may be complementary to the size and shape of the opening **34**. In the illustrated, non-limiting embodiment, the cooking container **32** is generally square in shape. However, in other embodiments, the cooking container **32** may have another configuration.

The cooking container **32** has a generally hollow interior **38** for supporting one or more consumable products, such as food products for example, therein. Examples of food products suitable for use with the cooking system **20**, include but are not limited to, meats, fish, poultry, bread, rice, grains, pasta, vegetables, fruits, and dairy products, among others.

At least one handle **40** may be associated with the cooking container **32** to allow a user to easily grasp and manipulate the cooking container **32** relative to the housing **22**. In the illustrated, non-limiting embodiment, the cooking container **32** includes a single handle **40** extending from a first, front surface **42** of the cooking container **32**. Although the cooking container **32** illustrated and described herein has a single handle **40**, in other embodiments, the cooking container **32** may have two or more handles, or alternatively, a handle or groove formed into a surface of the cooking container **32**. Any suitable configuration of the cooking container **32** and/or handle(s) **40** is within the scope of the disclosure.

One or more inserts or food support structures **50** may be positionable within the interior **38** of the cooking container **32**. In such embodiments, the insert **50** provides a surface on which food is supported. An example of an insert **50** suitable for use with the cooking container **32** is best shown in FIGS. **4** and **5**. As shown, the insert **50** includes a solid blocking wall **52** and a food support surface **54** having a plurality of perforations or openings **56** formed therein. In the illustrated, non-limiting embodiment, the blocking wall **52** and the food support surface **54** are arranged generally perpendicular to one another. Although the insert **50** is shown as being an L-shaped plate, in other embodiments, the insert **50** may include additional side walls such that the insert **50** is a basket for example. When the insert **50** is installed within the interior **38** of the cooking container **32**, the blocking wall **52** and the food support surface **54** of the insert **50** cooperate with one or more walls of the cooking container **32** to define an area there between referred to herein as a "cooking volume." Further, in embodiments where an insert is not disposed within the cooking container **32**, the interior **38** of the cooking container **32** may define the cooking volume.

In the illustrated, non-limiting embodiment, the bottom surface **58** of the cooking container **32** is sloped relative to a bottom surface of the housing **22** or to a surface on which the cooking system **20** may be positioned and supported. As shown, the slope extends generally upwardly towards a front wall **60** of the cooking container **32**. As a result, a height of the interior **38** of the cooking container **32** adjacent a back wall **62** is greater than a height of the interior **38** of the cooking container **32** adjacent the front wall **60** thereof. When the insert **50** is installed within the interior **38** of the cooking container **32**, the food support surface **54** has a generally horizontal orientation. As shown, the insert **50** may include one or more protrusions **64**, such as tabs for example, configured to contact the bottom surface **58** of the cooking container **32** to achieve this desired orientation. The

food support surface **54** is therefore at least partially offset from the bottom surface **58** of the cooking container **32**. Because of the angled configuration of the bottom surface **58** of the cooking container **32**, the clearance **66** between the bottom surface **58** and the food support surface **54**, varies, and more specifically, gradually decreases from a back to a front of the cooking container **32**.

The insert **50** and the bottom surface **58** of the cooking container **32** may cooperate to properly position the insert within the interior **38** such that the blocking wall **52** of the insert **50** is offset from the back wall **62** of the cooking container **32**. This clearance between the blocking wall **52** and the back wall **62** defines an air duct **74** within the cooking container **32**, separate from the cooking volume, and through which air is circulated during operation of the cooking system **20**. In an embodiment, a contour of the cooking container **32** facilitates positioning of the insert **50** relative to the cooking container **32**. As previously described, one or more protrusions **64** extend from a bottom surface of the insert **50**, and as best shown in FIGS. **4** and **5**, the bottom surface **58** of the cooking container **32** may be contoured to define one or more channels **68** therein. When the insert **50** is positioned within the cooking container **32**, the one or more protrusions **64** are received within the one or more channels **68**. The engagement between the at least one protrusion **64** and the sidewalls of the channel(s) **68** properly positions the insert **50** within the cooking container **32** to create a suitably sized air duct **74**.

The cooking system **20** additionally includes at least one heating element **70** operable to impart heat to the cooking volume during one or more modes of operation of the cooking system **20**. In the illustrated, non-limiting embodiment best shown in FIGS. **1**, **2** and **4-5**, the at least one heating element **70** is positioned within the internal compartment **28**, generally at or above an upper extent or surface **72** of the cooking container **32**, such as proximate a center of the cooking container **32** for example. In an embodiment, the heating element **70** is disposed adjacent a center of the cooking volume and/or the cooking container **32**. In such embodiments, the at least one heating element **70** is mounted completely outside of the cooking container **32**, and vertically offset from the upper extent or surface **72** thereof. In another embodiment, best shown in FIG. **3**, the at least one heating element **70** may be located adjacent the rear of the internal compartment **28**, such as in vertical alignment with the air duct **74** formed between the blocking wall **52** of the insert **50** and the back wall **62** of the cooking container **32**. However, it should be understood that a heating element **70** located at any suitable location is within the scope of the disclosure.

The at least one heating element **70** may be capable of performing any suitable type of heat generation. For example, a heating element **70** configured to heat one or more food items located within the cooking volume of the cooking container **32** via conduction, convection, radiation, and induction are all within the scope of the disclosure. In the illustrated, non-limiting embodiment, the heating element **70** is a convective heating element, and the cooking system **20** additionally includes an air movement mechanism **76**, such as a fan for example, operable to circulate air through the cooking volume. The air is heated as it flows along a path of circulation, such as by flowing over a portion of the at least one heating element **70**. As shown, the air movement mechanism **76** is located within the internal compartment **28** at a position entirely above the upper extent **72** of the cooking container **32**. In addition, at least a portion of the air movement mechanism **76**, and in some embodiment, the entirety of the air movement mechanism **76**, is disposed vertically above the cooking volume, and therefore the insert **50**. As shown, the air movement mechanism **76** is horizontally offset from the at least one heating element **70**. However, embodiments where the air movement mechanism **76** vertically or horizontally overlaps or is aligned with the at least one heating element **70** are also contemplated herein.

The air movement mechanism **76**, or at least a portion thereof may be removable from the internal compartment. In the illustrated, non-limiting embodiment, the air movement mechanism **76** is driven by a motor **78** located at least partially externally to the internal compartment **28**. Further, the cooking system **20** may include a vent **80** for exhausting hot air generated by operation of at least one of the air movement mechanism **76** or the motor **78** to the exterior of the cooking system **20**. Although the vent **80** is illustrated as being formed at the rear of the internal compartment **28**, embodiments where the vent **80** is formed at another location are also contemplated herein.

An example of the air movement mechanism **76** is illustrated in more detail in FIGS. **5** and **6**. In the illustrated, non-limiting embodiment, the air movement mechanism **76** includes a fan wheel **82** positioned within a fan housing **84**. As shown, the fan wheel **82** is configured to rotate about an axis X oriented generally horizontally, and in some embodiments, the axis of the fan wheel is oriented perpendicular to the translational axis along which the cooking container **32** is configured to move relative to the housing **22**. The fan housing **84** has an outer wall **86** having a scroll-shaped length, a first sidewall **88** including a first inlet aperture **90** and a second sidewall (not shown) including a second inlet aperture. Although the outlet opening **92** of the fan housing **84** is illustrated as being generally rectangular in shape, embodiments where the outlet opening **92** is another shape are also contemplated herein.

With specific reference now to FIG. **6**, the fan wheel **82** is typically formed with first wheel portion **94** and a second wheel portion **96**. Both the first wheel portion **94** and the second wheel portion **96** function as an air inlet and are configured to provide air to a single plenum. The air inlet defined by the first wheel portion **94** is arranged in a first plane at a first side of the air movement mechanism **76** and the air inlet defined by the second wheel portion **96** is arranged in a second plane at a second side of the air movement mechanism **76**, the first and second planes being generally parallel. Accordingly, the air inlets defined by the first and second wheel portions **94**, **96** remain generally fixed relative to both the fan housing **84** and an axis of rotation of the fan wheel **82**. The first wheel portion **94** includes a first plurality of impeller blades **98** and the second wheel portion **96** similarly includes a second plurality of impeller blades **100**. One or both of the first plurality and the second plurality of impeller blades **98**, **100** may have a backward curved configuration, a forward curved configuration, or another configuration.

With reference now to FIG. **7**, a control panel or user interface **102** may be positioned at an exterior surface of the housing **22**. The control panel **102** includes one or more inputs **104** associated with energizing the heating element **70** of the cooking system **20** and for selecting various modes of operation of the cooking system **20**. One or more of the inputs **104** may include a light or other indicator to show that the respective input has been selected. The control panel **102** may additionally include a display **106** separate from and associated with the at least one input **104**. However, embodiments where the display **106** is integrated into the at least one input **104** are also contemplated herein.

Operation of the one or more inputs **104** will be described in more detail below. FIG. **7** illustrates an example of a control system **108** of the cooking system **20** including a controller or processor **110** for controlling operation of the heating element **70** and air movement device **76** (including the motor **78** associated therewith), and in some embodiments for executing stored sequences of heating operation. The processor **110** is operably coupled to the control panel **102** and to the heating element **70** and the air movement mechanism **76**.

In addition, the cooking system **20** may include one or more sensors S for monitoring one or more parameters associated with the temperature of the heating element **70**, the cooking volume, the airflow being delivered to the cooking volume and/or and the insert **50** positioned within the cooking container **32** during a cooking operation. Accordingly, operation of the cooking system **20**, and in particular of the one or more heating elements **70**, may be regulated in response to the parameters sensed by the one or more sensors S. In an embodiment, the one or more sensors S includes a temperature sensor arranged in communication with the processor **110**. In an embodiment, the temperature sensor(s) S, such as a negative temperature coefficient (NTC) sensor for example, is positioned adjacent the rear of the internal compartment **28**, upstream from the air duct **74** defined between the back wall **62** of the cooking container **32** and the blocking wall **52** of the insert **50**. In embodiments of the cooking system **20** including one or more temperature sensors S, adjustment of an operating parameter, such as operation of the heating element **70** for example, may be performed using the control algorithm in response to the temperature of the heated airflow, measured by the temperature sensor S disposed in the heated airflow. For example, power provided to the heating element **70** may be increased if the sensed airflow temperature is below a set point, and the power provided to the heating element **70** may be reduced or ceased completely if the sensed airflow temperature is above a set point, thereby allowing the cooking volume to cool.

In an embodiment, the air movement mechanism **76** of the cooking system **20** is a variable speed fan operable at a plurality of rotational speeds. In an embodiment, the operational speed of the air movement mechanism **76** may vary based on the cooking mode selected. For example, the speed of the air movement mechanism **76** during operation in a first cooking mode may be different than the speed of the air movement mechanism **76** during operation in a second cooking mode. The operational speed of the air movement mechanism **76** may be controlled by the processor **110** in response to one or more inputs **104**, including selection of a cooking mode. However, the processor **110** may also be configured to adjust the operational speed of the air movement mechanism **76**, or alternatively, the power supplied to the at least one heating elements **70** to control the temperature and/or pressure within the interior **38** of the cooking container **32**.

In an embodiment, at least one input **104** on the control panel **102** is an on/off button which allows the user to activate or deactivate the control panel **102**. When the control panel **102** is deactivated, the one or more heating elements **70** are not energized. In an exemplary embodiment, the at least one input **104** is operable to select one or more manual modes of operation of the heating element **70**. Alternatively, or in addition, at least one input **104** is operable to select a stored sequence of operation of the heating element **70**. In some cases, the stored sequences may be particularly well suited for a given method of food preparation and/or for particular ingredients or types of ingredients. The plurality of stored sequences associated with the at least one input **104** may be stored within a memory accessible by the processor **110**. Alternatively, the plurality of stored sequences may be stored remotely from the cooking system **20**, and may be accessed by the processor **110**, such as via wireless communication for example.

In addition, a user may be able to enter a time associated with operation of the cooking system **20** in a desired manual mode. The time may be entered via the same input **104** or a separate input **104** as used to select a mode of operation. Further in embodiments where the cooking system **20** is in a mode configured to perform a stored sequence in response to selection of one of the inputs **104**, the display **106** may indicate a time remaining. Temperature or other parameters may also be entered via inputs **104** and/or shown on the display **106**.

The at least one input **104** may include a distinct start button intended to initiate operation in a desired mode, a distinct stop button to cease all operation, or a stop/start button intended to initiate and cease functions. Alternatively, the cooking system **20** may be operable to automatically start operation after a predetermined time has elapsed once an input **104** has been selected and any necessary information has been provided to the control panel **102**. Alternatively, one or more of the other inputs **104** may be operable to start and stop operation of the cooking system **20**, regardless of whether the cooking system **20** is following a stored sequence or is in a manual mode.

As previously noted, the one or more inputs **104** may be operable to initiate operation of the cooking system **20** in a plurality of cooking modes. In an embodiment, the cooking system **20** is operable in a cooking mode where the heating element **70** is employed to perform a non-contact heating operation, such as a convective or radiative heating operation. Suitable cooking operations that may be performed in this first cooking mode include, but are not limited to air frying, broiling, baking/roasting, and dehydrating.

During operation in the first cooking mode, the air movement mechanism **76** is operable to circulate a heated air flow through the cooking volume. As previously described, the air movement mechanism **76** is operable to draw air upwards, through the adjacent heating element **70** and into the two inlets arranged at opposing sides of the fan wheel **82**. The heated air is expelled outwardly from the outlet opening **92** of the fan housing **84** in a single direction. In the illustrated, non-limiting embodiment, the air output from the air movement mechanism **76** is provided within a plane directed downwardly into the cooking container **32**. In the illustrated, non-limiting embodiment, the outlet opening **92** arranged directly adjacent the upper extent **72** of the cooking container **32**, such that the air is expelled from the outlet opening **92** directly into the air duct **74** formed within the cooking container **32**. Once the heated air reaches the bottom surface **58** of the cooking container **32**, the hot air will be deflected off the bottom surface **58** towards the cooking volume. Because the bottom surface **58** of the cooking container **32** is sloped, the interaction between the heated air and the sloped bottom surface **58** directs the heated air both forwards and upwardly, causing the air to evenly distribute from the back to the front of the cooking container **32** before passing through the openings **56** formed in the food support surface **54** of the insert **50**. The hot air is drawn by the air movement mechanism **76** through the openings **56** and over the exterior of the food items positioned on the food support surface **54**. From within the

cooking volume, the air is then drawn back into one of the inlets of the air movement mechanism **76** for further circulation within the interior **28**.

With reference now to FIGS. **8-15**, in an embodiment of the cooking system **20**, the housing **22** includes a plurality of internal compartments arranged within the interior of the housing **22**. For example, as best shown in FIGS. **8**, **14**, and **15**, the housing **22** is illustrated as having a first internal compartment **28***a* and a second internal compartment **28***b*, separated from one another at least in part by a divider or wall **130**. The divider **130** extends vertically from a base of the housing or liner **30** and forms a sidewall of a bottom portion of two adjacent internal compartments **28***a*, **28***b*. In an embodiment, the divider **130** extends to a lower edge of an upper portion of each internal compartment **28***a*, **28***b*, the upper portion of each internal compartment containing the respective heating element **70***a*, **70***b*, and air movement mechanism **76***a*, **76***b* associated therewith. As shown, the plurality of internal compartments **28***a*, **28***b* (both the upper and lower portions) are fluidly separate from one another. Although two internal compartments **28***a*, **28***b* are illustrated and described herein, it should be understood that embodiments including any number of internal compartments, such as more than two compartments are also within the scope of the disclosure. The plurality of internal compartments **28***a*, **28***b* may be substantially similar in size and shape, or alternatively, may be different.

Each of the internal compartments **28***a*, **28***b* formed in the housing **22** may be substantially identical to the internal compartment **28** previously described with respect to FIGS. **1-6**. More specifically, a respective cooking container **32***a*, **32***b* is insertable into each internal compartment **28***a*, **28***b*, and an insert **50***a*, **50***b* may be removably installed within the interior **38***a*, **38***b* of each cooking container **32***a*, **32***b*. In addition, each internal compartment **28***a*, **28***b* includes at least one heating element **70***a*, **70***b* and an air movement mechanism **76***a*, **76***b* configured to circulate air through the internal compartment **28***a*, **28***b*, respectively. The components associated with operation of each internal compartment, such as the heating element and air movement mechanism are also independently operable and fluidly separate from the components of the adjacent internal compartment.

In the non-limiting embodiment of FIGS. **14** and **15**, each air movement mechanism **76***a*, **76***b* is illustrated as a fan wheel or impeller **82** that is configured to rotate about a generally vertically oriented axis. The air movement mechanisms **76***a*, **76***b* need not include a separate housing as previously described with respect to the embodiment of FIGS. **1-6**. As shown, the air movement mechanisms **76***a*, **76***b* may be stacked vertically relative to the heating element **70***a*, **70***b* such that a flow of air is configured to flow from the heating element **70***a*, **70***b* directly to the air movement mechanism **76***a*, **76***b* sequentially. The axial flow of air provided to the inlet of the air movement mechanism **76***a*, **76***b* is expelled from the impeller **82***a*, **82***b* radially, adjacent the sides of the internal compartment **28**. Although this configuration of the air movement mechanism **76***a*, **76***b* is illustrated with respect to an embodiment of the cooking system **20** including a plurality of fluidly distinct internal compartments **28***a*, **28***b*, it should be understood that such an air movement mechanism **76** may also be used in embodiments of the cooking system **20** including only a single internal compartment **28**.

As noted above, the cooking system **20** includes a motor **78** located external to the internal compartment **28** and operable to rotate an air movement mechanism **76** about an axis of rotation X. In embodiments of the cooking system **20** including two distinct internal compartments, a single motor **78** may be used to drive both a first air movement mechanism **76***a* associated with the first internal compartment **28***a* and a second air movement mechanism **76***b* associated with the second internal compartment **28***b*. In such embodiments, the motor **78** may be disposed within the housing **22** between the first and second compartments **28***a*, **28***b*, such that the first air movement mechanism **76***a* is mounted to a first output shaft **120** extending from a first side of the motor **78** and the second air movement mechanism **76***b* is mounted to a second output shaft **122** extending from a second side of the motor **78**. As a result, the first air movement mechanism **76***a* and the second air movement mechanism **76***b* may be positioned coaxially (see FIG. **10**). However, embodiments, where the axis of rotation X1 of the first air movement mechanism **76***a* is offset from the axis of rotation X2 of the second air movement mechanism **76***b* are also contemplated herein.

Because a single motor **78** is used to drive the both the first and second air movement mechanisms **76***a*, **76***b*, in an embodiment, both the first and second air movement mechanisms **76***a*, **76***b* are driven about their axes, even when only one of the first and second internal compartment **28***a*, **28***b* is being used to perform a cooking operation. Accordingly, an air movement mechanism **76** may rotate about its axis even when the adjacent heating mechanism **70** associated therewith is non-operational. In other embodiments, the first and second air movement mechanisms **76***a*, **76***b* may be independently operable via a shared motor **78**. Further, in an embodiment, the motor **78** is operable to rotate the first and second air movement mechanisms **76***a*, **76***b*, at the same speed. However, embodiments where the first and second air movement mechanisms **76***a*, **76***b*, are rotated at different speeds, such as via a coupling for example, are also within the scope of the disclosure.

However, it should be understood that embodiments of the cooking system **20** that include a separate motor associated with each internal compartment are also within the scope of the disclosure. For example, as shown in FIG. **15**, the system **20** includes two separate motors **78***a*, **78***b* configured to operate the air movement mechanisms **76***a*, **76***b* associated with the first and second internal compartments **28***a*, **28***b* independently. In such embodiments, each motor **78***a*, **78***b* may be located external to the internal compartment **28**, for example in a vertically stacked configuration relative to the heating elements **70***a*, **70***b*, and the air movement mechanisms **76***a*, **76***b*. In such embodiments, the motors **78***a*, **78***b* may be located near an upper end or top surface of the housing **22**.

In embodiments of the cooking system **20** including a plurality of internal compartments, a single control system **108**, as previously described with respect to FIG. **7**, may be suitable to selectively perform one or more cooking operations associated with both the first internal compartment **28***a* and the second internal compartment **28***b*. Accordingly, the same inputs **104** may be used to provide control for the plurality of internal compartments **28***a*, **28***b*, or alternatively, distinct inputs **104** may be associated with each of the plurality of internal compartments **28***a*, **28***b*, respectively.

All references, including publications, patent applications, and patents cited herein are hereby incorporated by reference to the same extent as if each reference were individually and specifically indicated to be incorporated by reference and were set forth in its entirety herein.

The use of the terms "a" and "an" and "the" and similar referents in the context of describing the disclosure (especially in the context of the following claims) is to be

construed to cover both the singular and the plural, unless otherwise indicated herein or clearly contradicted by context. The terms "comprising," "having," "including," and "containing" are to be construed as open-ended terms (i.e., meaning "including, but not limited to,") unless otherwise noted. Recitation of ranges of values herein are merely intended to serve as a shorthand method of referring individually to each separate value falling within the range, unless otherwise indicated herein, and each separate value is incorporated into the specification as if it were individually recited herein. All methods described herein can be performed in any suitable order unless otherwise indicated herein or otherwise clearly contradicted by context. The use of any and all examples, or exemplary language (e.g., "such as") provided herein, is intended merely to better illuminate the disclosure and does not pose a limitation on the scope of the disclosure unless otherwise claimed. No language in the specification should be construed as indicating any non-claimed element as essential to the practice of the disclosure.

Exemplary embodiments of this disclosure are described herein, including the best mode known to the inventors for carrying out the disclosure. Variations of those embodiments may become apparent to those of ordinary skill in the art upon reading the foregoing description. The inventors expect skilled artisans to employ such variations as appropriate, and the inventors intend for the disclosure to be practiced otherwise than as specifically described herein. Accordingly, this disclosure includes all modifications and equivalents of the subject matter recited in the claims appended hereto as permitted by applicable law. Moreover, any combination of the above-described elements in all possible variations thereof is encompassed by the disclosure unless otherwise indicated herein or otherwise clearly contradicted by context.

What is claimed is:

1. A cooking system comprising:

a housing having a first internal compartment and a second internal compartment, the first internal compartment and the second internal compartment being separated by a dividing wall extending upward from a base of the housing;

a first cooking container defining a first cooking volume, said first cooking container being removably receivable within said first internal compartment to completely close off an opening to said first internal compartment when fully inserted therein, and a second cooking container defining a second cooking volume, said second cooking container being removably receivable within said second internal compartment to completely close off an opening to said second internal compartment when fully inserted therein;

a first heating element and a second heating element disposed in said housing, said first heating element being in thermal communication with said first cooking volume and said second heating element being in thermal communication with said second cooking volume, the first and second heating elements being independently operable to independently cook food contained within the first and second cooking containers; and

a first fan and a second fan disposed in said housing, said first fan being in fluid communication with said first cooking volume and said second fan being in fluid communication with said second cooking volume.

2. The cooking system of claim **1**, wherein said first cooking container and said second cooking container are individually insertable into said first internal compartment and said second internal compartment respectively.

3. The cooking system of claim **1**, wherein said first internal compartment and said second internal compartment are fluidly separate.

4. The cooking system of claim **1**, wherein said first fan is stacked vertically relative to said first heating element within said housing and said second fan is stacked vertically relative to said second heating element within said housing.

5. The cooking system of claim **1**, wherein said first fan includes a first inlet, a second inlet, and an outlet, said first inlet and said second inlet being arranged in fluid communication with said outlet.

6. The cooking system of claim **1**, wherein said first fan has a first axially oriented inlet and a first radially oriented outlet and said second fan has a second axially oriented inlet and a second radially oriented outlet.

7. The cooking system of claim **1**, wherein said first cooking container includes a first handle and said second cooking container includes a second handle.

8. The cooking system of claim **1**, further comprising a motor operably coupled to each of said first fan and said second fan.

9. The cooking system of claim **8**, wherein said motor is located externally from said first internal compartment and said second internal compartment.

10. The cooking system of claim **8**, wherein said motor is positioned between said first internal compartment and said second internal compartment.

11. The cooking system of claim **1**, wherein the housing has a first opening extending into the first internal compartment and a second opening extending into the second internal compartment, and wherein said first cooking container is removably receivable within said first internal compartment to seal the first opening to said first internal compartment when inserted therein, and wherein said second cooking container is removably receivable within said second internal compartment to seal the second opening to said second internal compartment when inserted therein.

12. A cooking system, comprising:

a housing having a first internal cooking compartment with a first cooking container removably disposed therein and a second internal compartment with a second cooking container removably disposed therein, the first internal compartment including a first heating assembly comprising a first fan and a first heating element configured to cook food disposed in the first cooking container, and the second internal cooking compartment including a second heating assembly comprising a second fan and a second heating element configured to cook food disposed in the second cooking container, the first and second heating assemblies being independently operable to independently cook food contained within the first and second cooking containers, and the first and second heating assemblies being programmable to simultaneously cook food in separate cooking modes,

wherein the first and second internal cooking compartments are separated by a dividing wall extending upward from a base of the housing, wherein the first and second cooking containers are horizontally coplanar when disposed in the first and second internal cooking compartments respectively.

13. The cooking system of claim **12**, wherein the first cooking container includes a first external handle attached thereto and the second cooking container includes a second external handle attached thereto.

14. The cooking system of claim **12**, wherein the first internal cooking compartment and the second internal cooking compartment are independently operable to cook food using at least one of conduction, convection, radiation, and induction.

15. The cooking system of claim **12**, further comprising a control system configured to operate the first and second heating assemblies, the control system being configured to receive inputs corresponding to at least one of a temperature, a cook time, and a food type.

16. The cooking system of claim **12**, further comprising a motor operably coupled to each of the first and second fans, the motor configured to operate the first and second fans at the same speed or at different speeds.

17. The cooking system of claim **12**, wherein the housing has a first opening extending into the first internal cooking compartment and a second opening extending into the second internal compartment, and wherein the first cooking container is configured to seal the first opening to said first internal cooking compartment when said first cooking container is disposed therein, and wherein the second cooking container is configured to seal the second opening to said second internal cooking compartment when said second cooking container is disposed therein.

18. A cooking system, comprising:

a housing having first and second internal independently removable cooking containers disposed therein, the first and second cooking containers being separated from each other by a dividing wall extending upward from a base of the housing, each of the first and second cooking containers defining a cooking volume therein, the first and second cooking containers being configured to engage with first and second respective channels inside the housing to define first and second respective air ducts therein;

first and second heating elements disposed in the housing adjacent the cooking volume of the first and second cooking containers, respectively, the first and second heating elements being independently operable; and

first and second fans disposed in the housing adjacent the first and second heating elements, respectively, the first and second fans being independently operable, and the first and second fans being configured to circulate air through the first and second cooking volumes, respectively.

19. The cooking system of claim **18**, further comprising a control system configured to operate cooking processes of food contained in the first and second cooking containers.

20. The cooking system of claim **19**, wherein the control system is configured to independently operate the first and second heating elements and the first and second fans.

21. The cooking system of claim **19**, wherein the control system is configured to receive inputs corresponding to at least one of a temperature, a cook time, and a food type.

22. The cooking system of claim **19**, wherein the control system is configured to adjust cooking parameters based on sensed data without user input.

* * * * *