US 20070247414A1

(19) United States

(12) Patent Application Publication

(10) Pub. No.: US 2007/0247414 A1

(43) Pub. Date: Oct. 25, 2007

Roberts

(54) SOLID STATE LUMINAIRES FOR GENERAL ILLUMINATION

(75) Inventor: **John K. Roberts**, Grand Rapids, MI (US)

Correspondence Address:
MYERS BIGEL SIBLEY & SAJOVEC
PO BOX 37428
RALEIGH, NC 27627 (US)

(73) Assignee: **Cree, Inc.**

(21) Appl. No.: **11/408,648**

(22) Filed: **Apr. 21, 2006**

Publication Classification

(51) **Int. Cl.**

G09G	*3/36*	(2006.01)
G01D	*11/28*	(2006.01)
G09F	*9/33*	(2006.01)

(52) **U.S. Cl.** **345/102**; 362/29; 340/815.45

(57) **ABSTRACT**

A lighting panel includes a tile having a first side parallel to a principal plane of the lighting panel, a plurality of solid state lighting devices arranged on the first side of the tile and configured to emit light, a reflector sheet on the first side of the tile, and a brightness enhancement film on the reflector sheet. The reflector sheet may be arranged between the tile and the brightness enhancement film and the brightness enhancement film may be configured to increase the on-axis intensity of emitted light. A luminaire adapted for general illumination includes a lighting panel as described above, a current supply circuit configured to supply an on-state drive current to a string of lighting devices in response to a control signal, a photosensor arranged to receive light from one of the solid state lighting devices, and a control system configured to receive an output signal from the photosensor and to adjust the control signal responsive to the output signal of the photosensor.

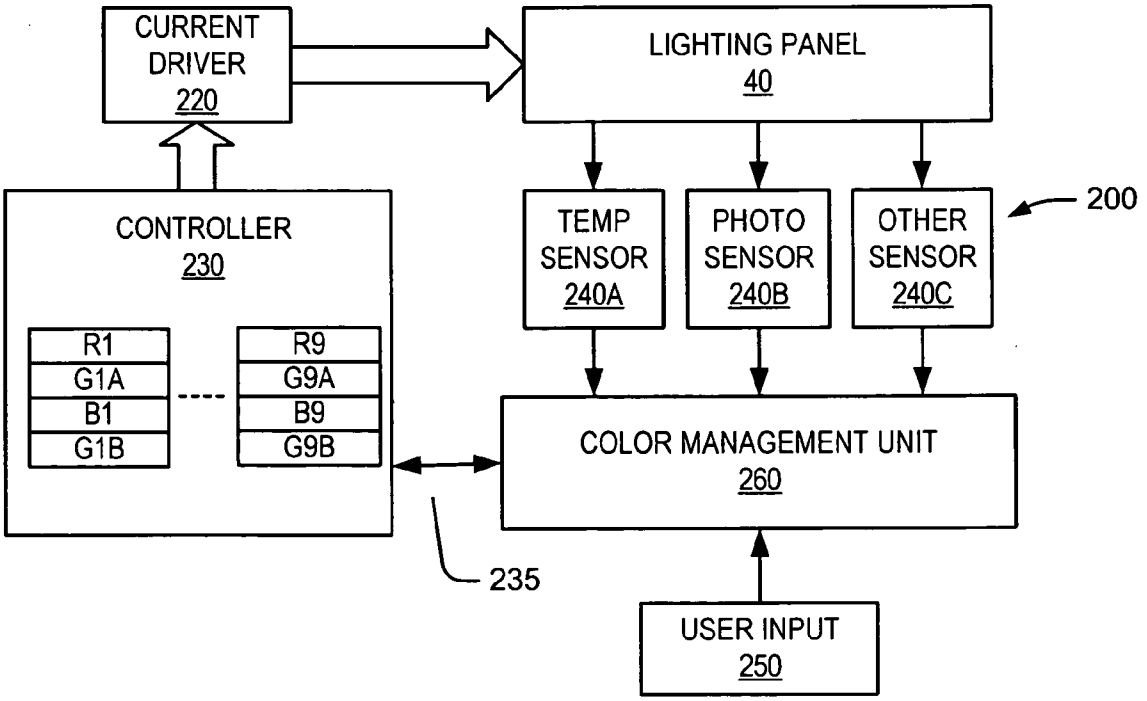

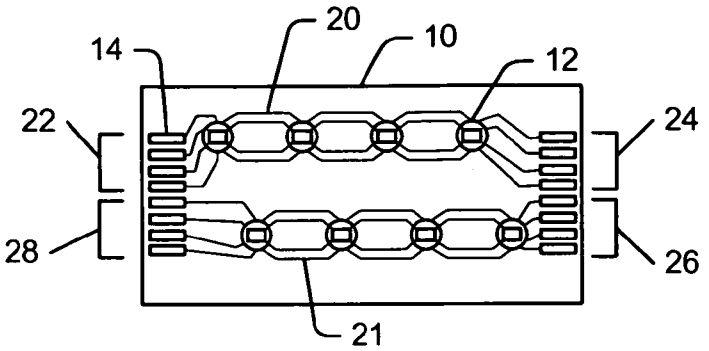

FIGURE 1

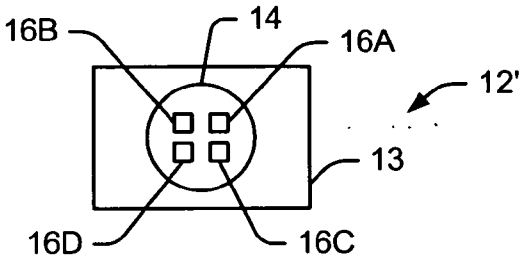

FIGURE 2

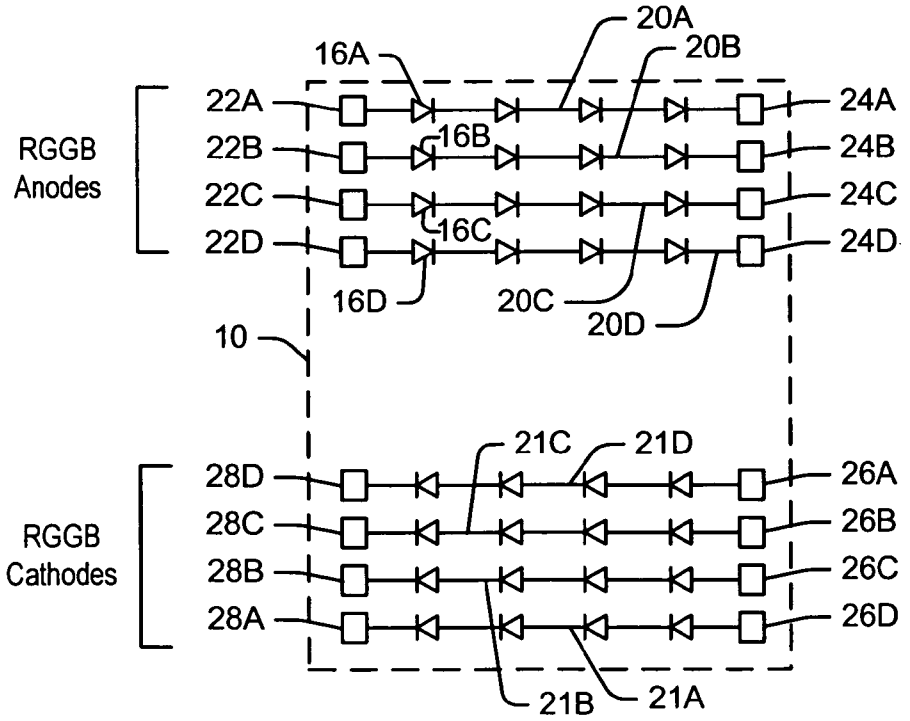

FIGURE 3

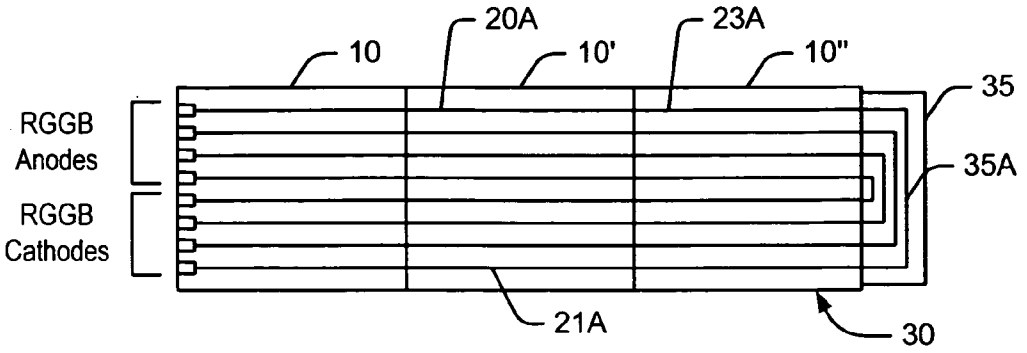

FIGURE 4A

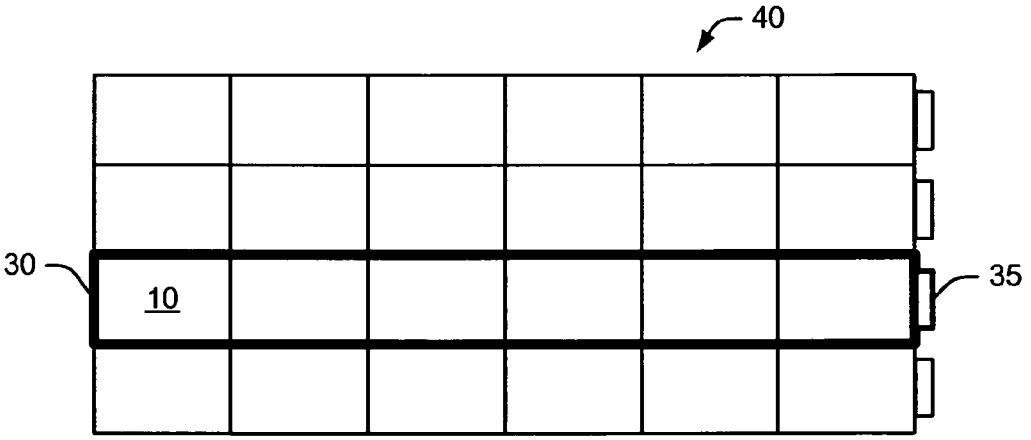

FIGURE 4B

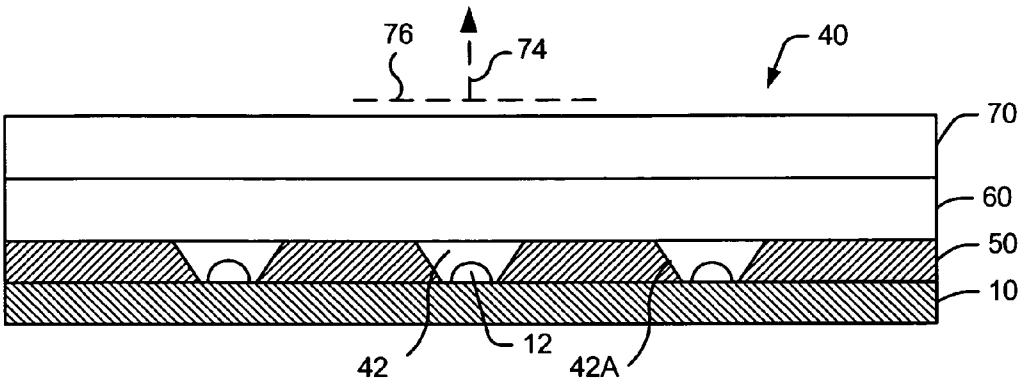

FIGURE 5A

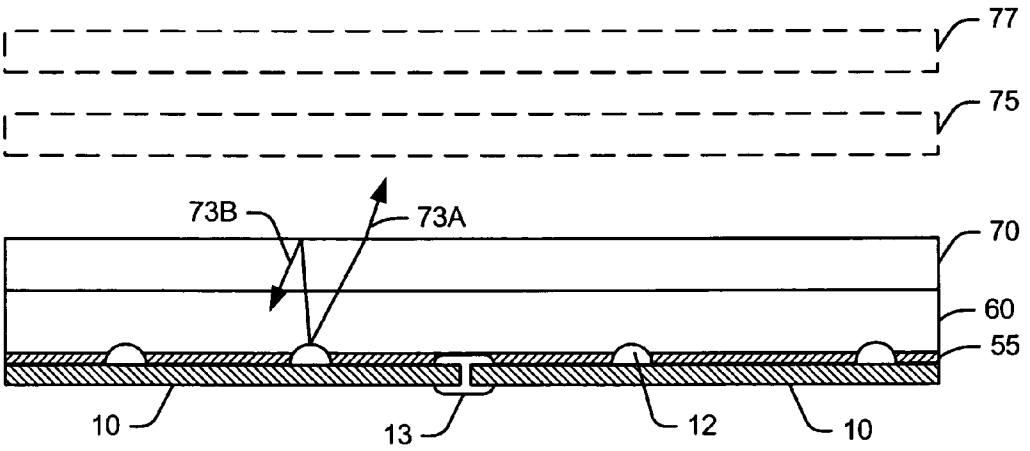

FIGURE 5B

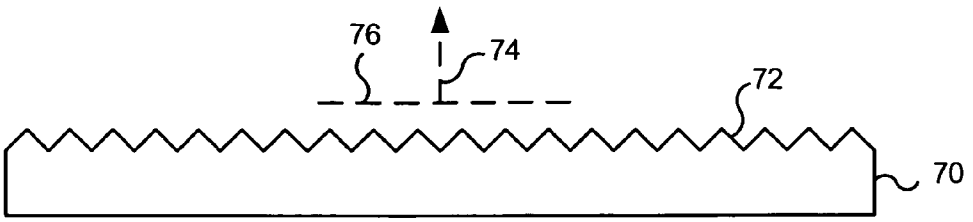

FIGURE 6A

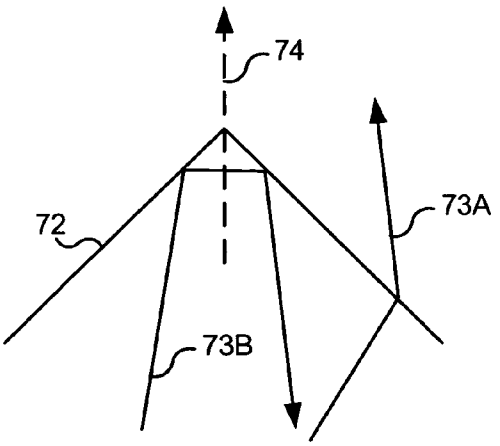

FIGURE 6B

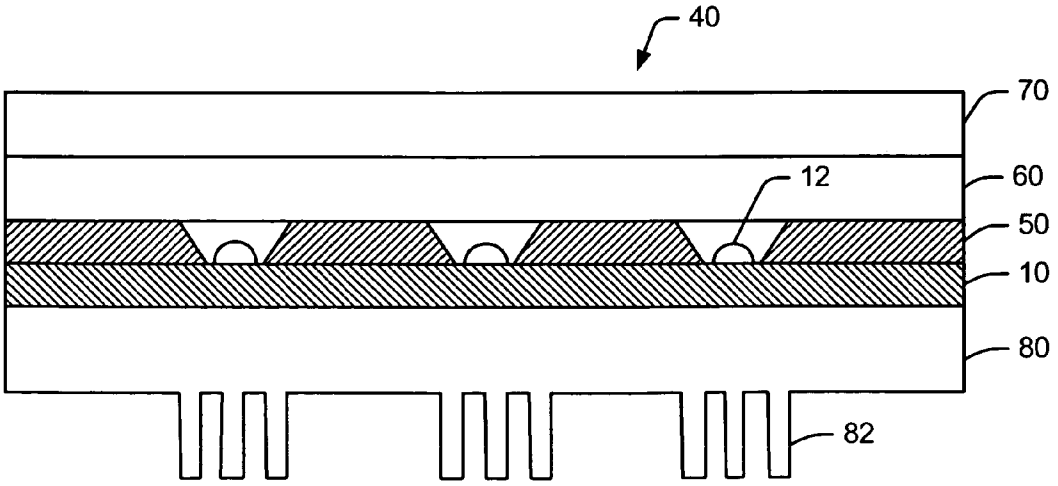

FIGURE 7

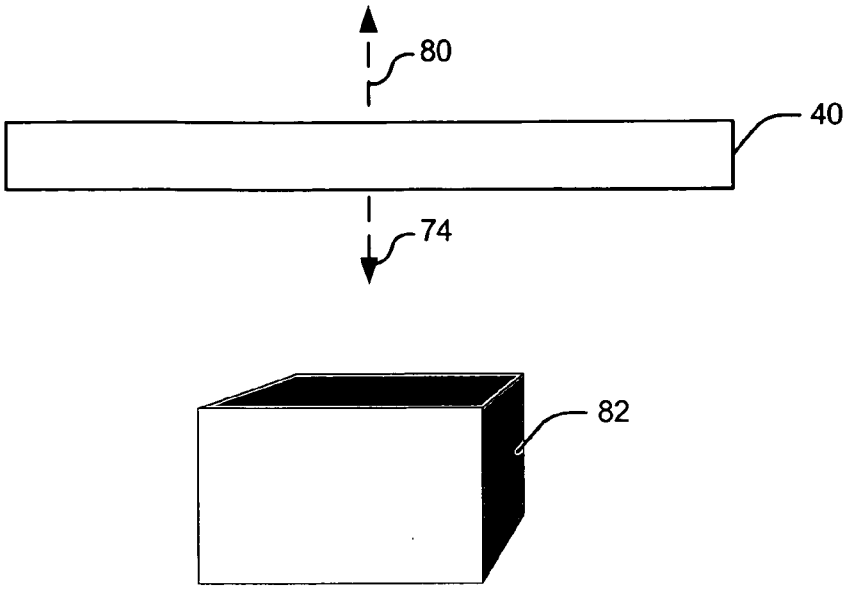

FIGURE 16

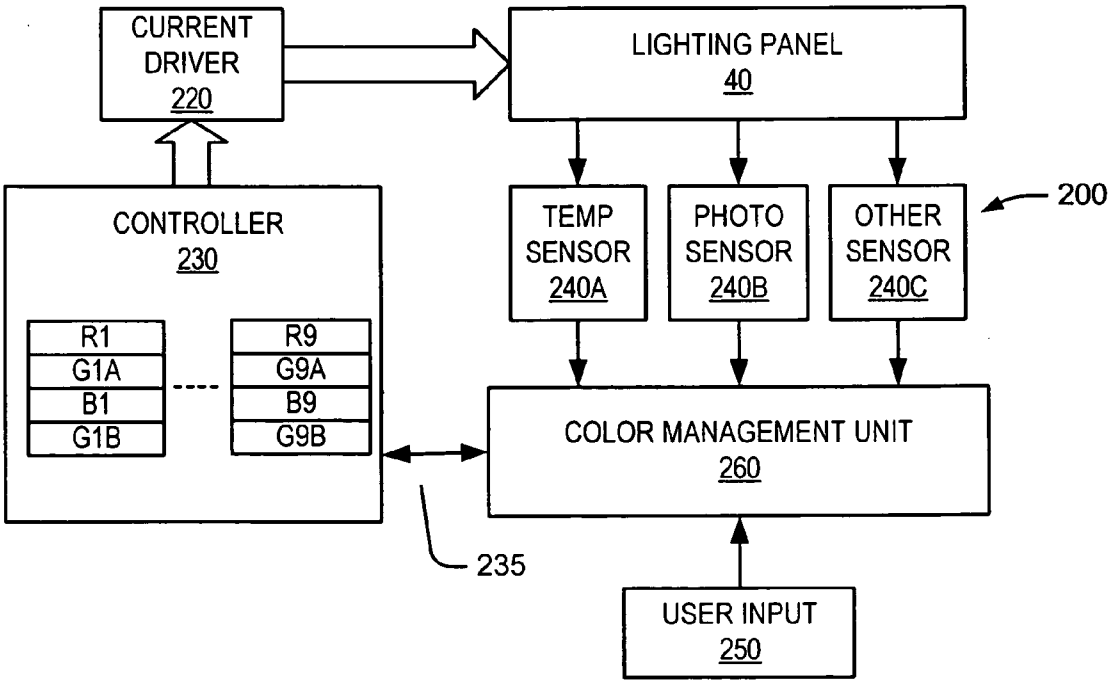

FIGURE 8

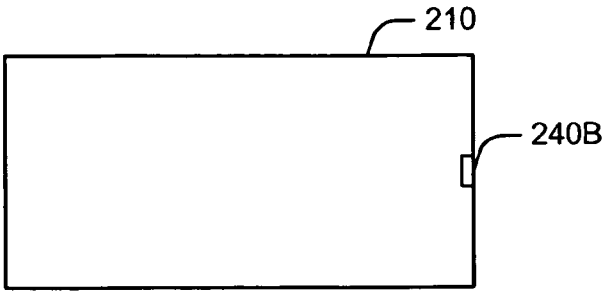

FIGURE 9A

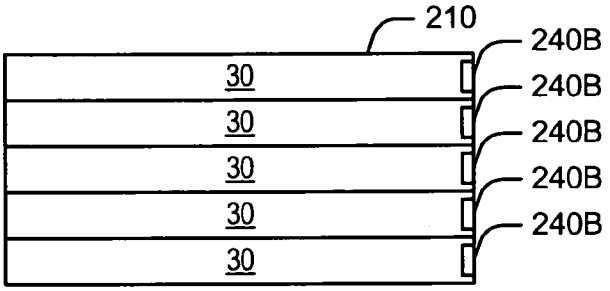

FIGURE 9B

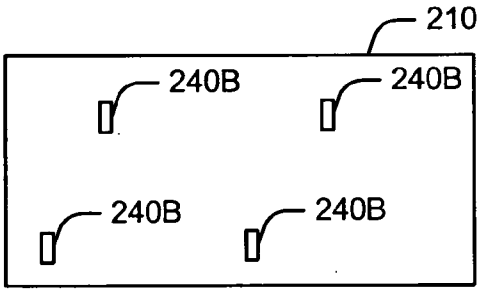

FIGURE 9C

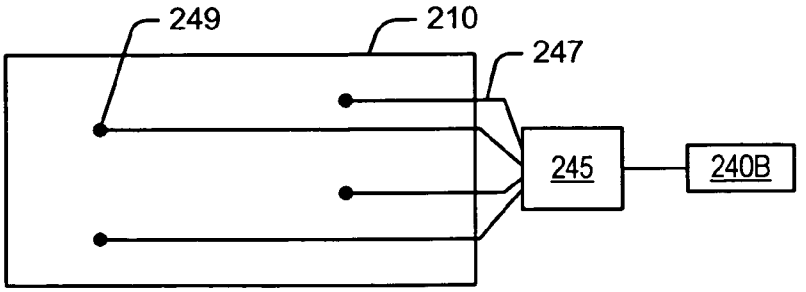

FIGURE 9D

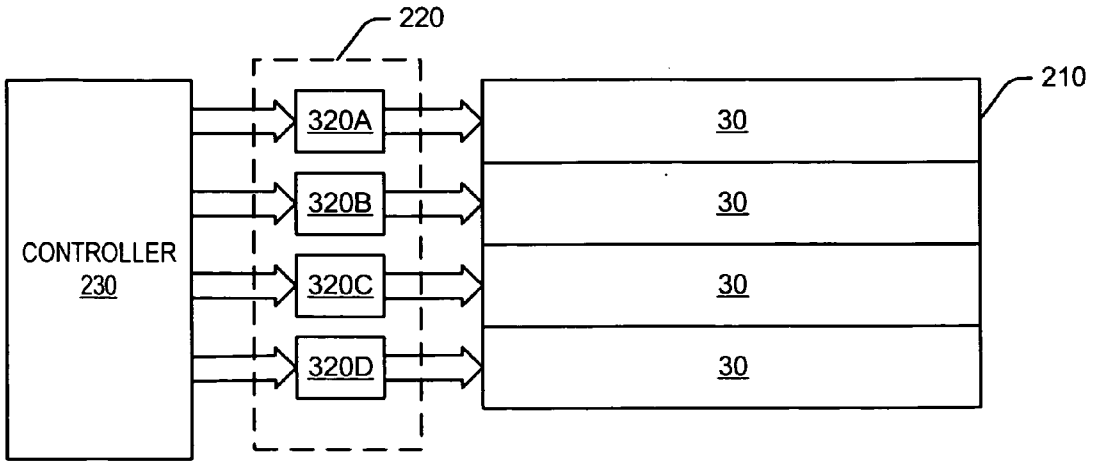

FIGURE 10

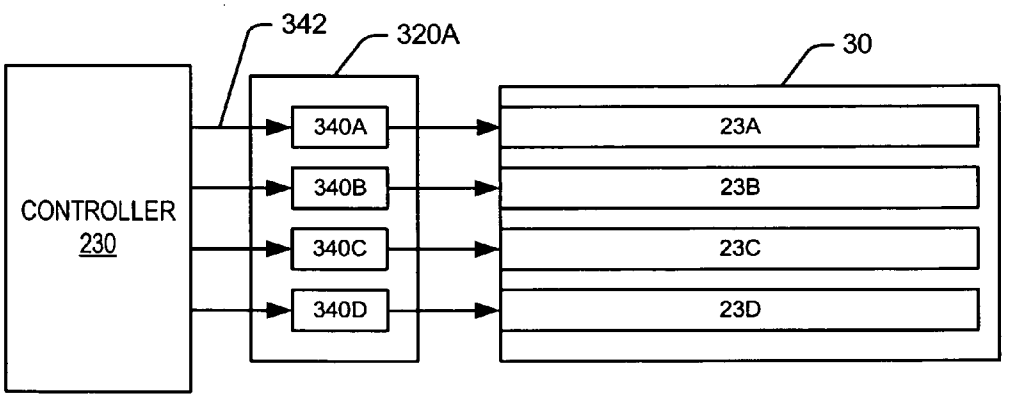

FIGURE 11

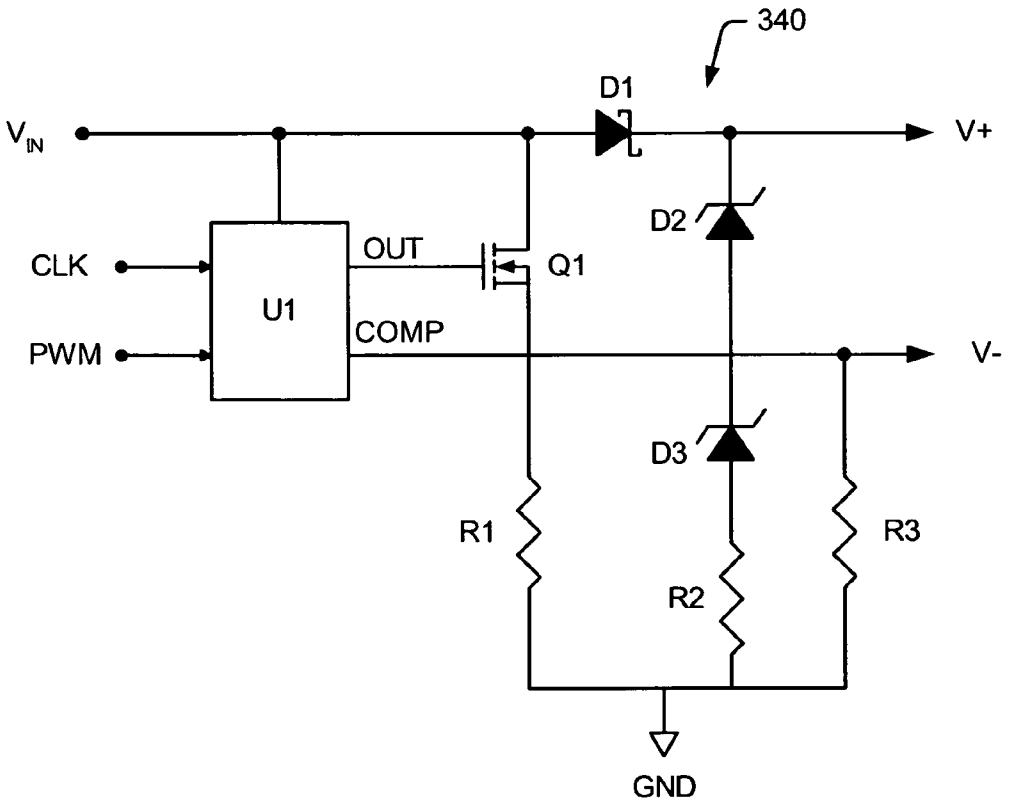

FIGURE 12

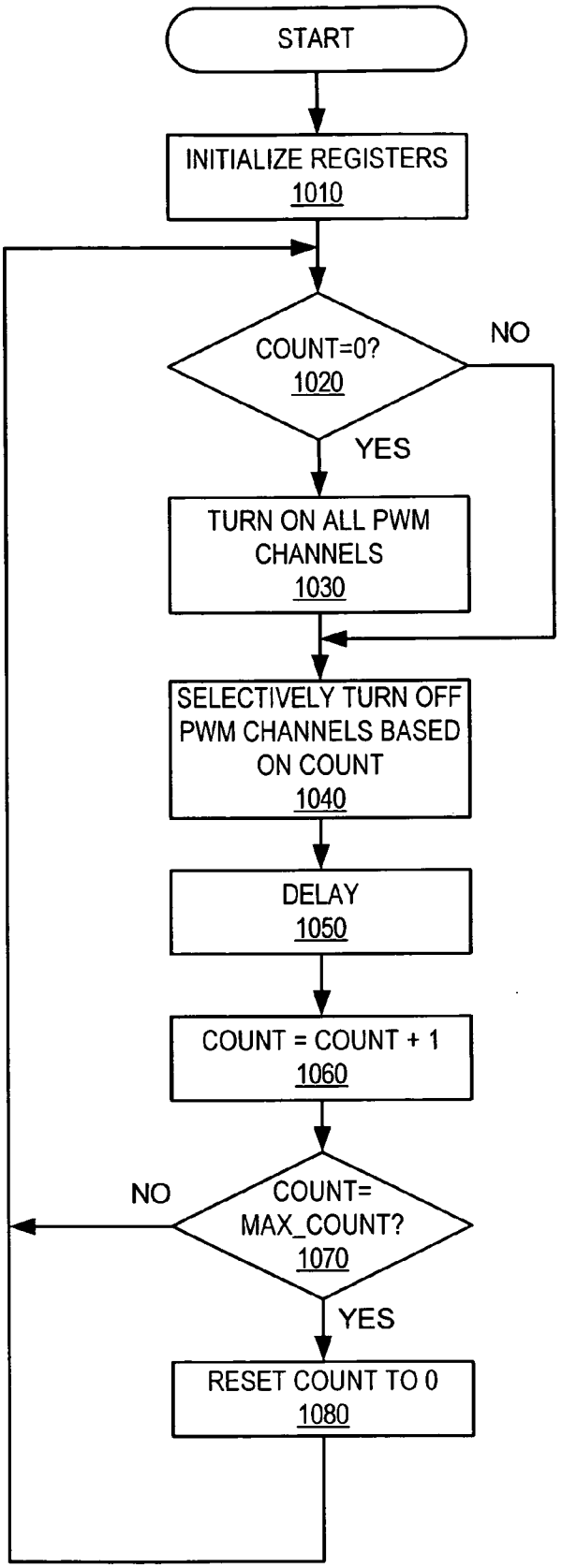
START
INITIALIZE REGISTERS
1010
COUNT=0?
1020
NO
YES
TURN ON ALL PWM CHANNELS
1030
SELECTIVELY TURN OFF PWM CHANNELS BASED ON COUNT
1040
DELAY
1050
COUNT = COUNT + 1
1060
COUNT= MAX_COUNT?
1070
NO
YES
RESET COUNT TO 0
1080

FIGURE 13

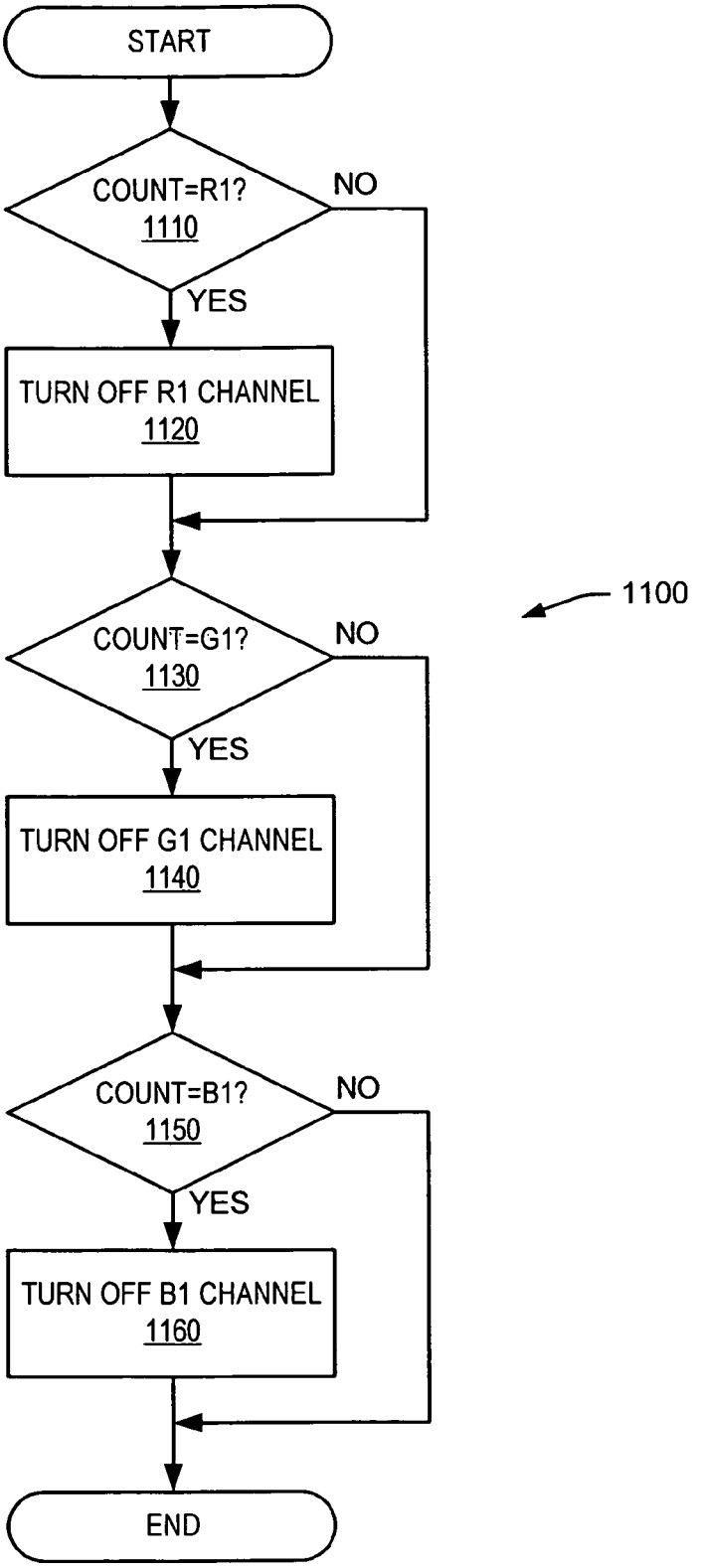
START
COUNT=R1?
1110
NO
YES
TURN OFF R1 CHANNEL
1120
COUNT=G1?
1130
NO
YES
TURN OFF G1 CHANNEL
1140
COUNT=B1?
1150
NO
YES
TURN OFF B1 CHANNEL
1160
END
1100

FIGURE 14

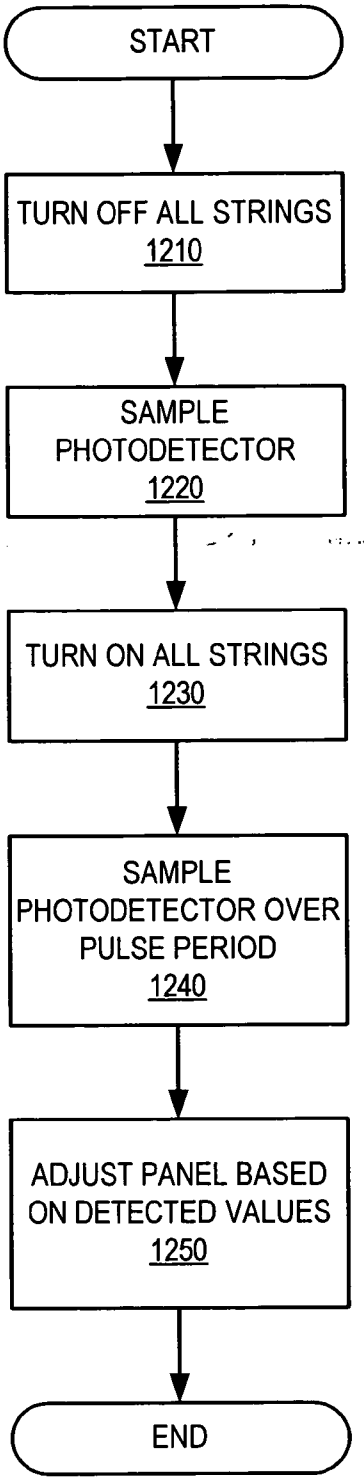
START
TURN OFF ALL STRINGS
1210
SAMPLE
PHOTODETECTOR
1220
TURN ON ALL STRINGS
1230
SAMPLE
PHOTODETECTOR OVER
PULSE PERIOD
1240
ADJUST PANEL BASED
ON DETECTED VALUES
1250
END

FIGURE 15

SOLID STATE LUMINAIRES FOR GENERAL ILLUMINATION

FIELD OF THE INVENTION

[0001] The present invention relates to solid state lighting, and more particularly to solid state lighting and to systems and methods for adjusting the light output of solid state lighting.

BACKGROUND

[0002] Solid state lighting arrays are used for a number of lighting applications. For example, solid state lighting panels including arrays of solid state lighting devices have been used as direct illumination sources, for example, in architectural and/or accent lighting. A solid state lighting device may include, for example, a packaged light emitting device including one or more light emitting diodes (LEDs). Inorganic LEDs typically include semiconductor layers forming p-n junctions. Organic LEDs (OLEDs), which include organic light emission layers, are another type of solid state light emitting device. Typically, a solid state light emitting device generates light through the recombination of electronic carriers, i.e. electrons and holes, in a light emitting layer or region.

[0003] Solid state lighting panels are commonly used as backlights for small liquid crystal display (LCD) display screens, such as LCD display screens used in portable electronic devices. In addition, there has been increased interest in the use of solid state lighting panels for general illumination, such as indoor lighting.

[0004] The color rendering index of a light source is an objective measure of the ability of the light generated by the source to accurately illuminate a broad range of colors. The color rendering index ranges from essentially zero for monochromatic sources to nearly 100 for incandescent sources. For large-scale backlight and illumination applications, it is often desirable to provide a lighting source that generates white light having a high color rendering index, so that objects illuminated by the lighting panel may appear more natural. Accordingly, such lighting sources may typically include an array of solid state lighting devices including red, green and blue light emitting devices. When red, green and blue light emitting devices are energized simultaneously, the resulting combined light may appear white, or nearly white, depending on the relative intensities of the red, green and blue sources. There are many different hues of light that may be considered "white." For example, some "white" light, such as light generated by sodium vapor lighting devices, may appear yellowish in color, while other "white" light, such as light generated by some fluorescent lighting devices, may appear more bluish in color.

[0005] The chromaticity of a particular light source may be referred to as the "color point" of the source. For a white light source, the chromaticity may be referred to as the "white point" of the source. The white point of a white light source may fall along a locus of chromaticity points corresponding to the color of light emitted by a black-body radiator heated to a given temperature. Accordingly, a white point may be identified by a correlated color temperature (CCT) of the light source, which is the temperature at which the heated black-body radiator matches the hue of the light source. White light typically has a CCT of between about 4000 and 8000K. White light with a CCT of 4000 has a yellowish color, while light with a CCT of 8000K is more bluish in color.

[0006] For larger illumination applications, multiple solid state lighting panels may be connected together, for example, in a two dimensional array, to form a lighting system. Unfortunately, however, the hue of white light generated by the lighting system may vary from panel to panel, and/or even from lighting device to lighting device. Such variations may result from a number of factors, including variations of intensity of emission from different LEDs, and/or variations in placement of LEDs in a lighting device and/or on a panel. Accordingly, in order to construct a multi-panel lighting system that produces a consistent hue of white light from panel to panel, it may be desirable to measure the hue and saturation, or chromaticity, of light generated by a large number of panels, and to select a subset of panels having a relatively close chromaticity for use in the multi-panel lighting system. This may result in decreased yields and/or increased inventory costs for a manufacturing process.

[0007] Moreover, even if a solid state lighting panel has a consistent, desired hue of light when it is first manufactured, the hue and/or brightness of solid state devices within the panel may vary non-uniformly over time and/or as a result of temperature variations, which may cause the overall color point of a lighting panel made up of the panels to change over time and/or may result in non-uniformity of color across the lighting panel. In addition, a user may wish to change the light output characteristics of a lighting panel in order to provide a desired hue and/or brightness level of the lighting panel.

[0008] Solid state lighting sources may have a number of advantages over conventional lighting sources for general illumination. For example, a conventional incandescent spotlight may include a 150 watt lamp projecting light from a 30 square inch aperture. Thus, the source may dissipate about 5 watts of power per square inch. Such sources may have an efficiency of no more than about 10 lumens per watt, which means that in terms of ability to generate light in a given area, such a source may generate about 50 lumens per square inch in a relatively small space.

[0009] A conventional incandescent spotlight provides a relatively bright, highly directed source of light. However, an incandescent spotlight may illuminate only a small area. Thus, even though an incandescent spot light has a relatively high light output, it may not be suitable for general illumination, for example illumination of a room. Thus, when used indoors, spotlights are typically reserved for accent or fill-in lighting applications.

[0010] Fluorescent light bulbs, on the other hand, produce light in a manner that is more suitable for general illumination. Fluorescent light bulbs approximate line sources of light, for which the intensity falls off in proportion to 1/r near the source, where r is the distance from the source. Furthermore, fluorescent light sources are typically grouped in a panel to approximate a plane source of light, which may be more useful for general interior illumination and/or other purposes, since the intensity of the light generated by a plane source may not drop off as quickly near the source as the intensity of a point or line source of light does.

[0011] A typical fluorescent light source may include three bulbs, which may emit 40 watts of light per bulb, for a total

of 120 watts. A typical fluorescent panel for general interior illumination may have dimensions of about 24"x48", which corresponds to about 0.1 watts per square inch of power dissipation. A fluorescent light source may produce up to about 65 lumens per watt, for an overall luminance of about 7 lumens per square inch for a 24"x48" lighting panel. Even though this may be significantly less than the luminance of an incandescent spotlight of similar power, the distributed nature of a fluorescent light panel and its suitability for interior illumination has made fluorescent light panels a popular choice for general lighting applications. As noted above, however, fluorescent light may appear slightly bluish or washed out. Furthermore, fluorescent light bulbs may present environmental difficulties, since they may include mercury as a component.

[0012] Accordingly, there is a continued need for improved lighting sources for general illumination.

SUMMARY

[0013] A lighting panel according to some embodiments of the invention includes at least one tile, or an LED module having one or more LEDs mounted thereon, having a first side parallel to a principal plane of the lighting panel, a plurality of solid state lighting devices arranged on the first side of the at least one tile and configured to emit light, a reflector sheet on the first side of the at least one tile, and a brightness enhancement film on the reflector sheet. The reflector sheet may be arranged between the at least one tile and the brightness enhancement film and the brightness enhancement film may be configured to preferentially emit light having a first orientation from the lighting panel and to preferentially reflect light having a second orientation, different from the first orientation, back into the lighting panel.

[0014] The reflector sheet may be configured to reflect and disperse light incident thereon. The reflector sheet may include a plurality of apertures therethrough, respective ones of the plurality of apertures aligned with corresponding ones of the plurality of solid state lighting devices. Respective ones of the apertures may include angled sidewalls to thereby form reflective optical cavities around the corresponding ones of the plurality of solid state lighting devices. In particular embodiments, the reflector sheet may include a plastic foam.

[0015] The lighting panel may further include a diffuser sheet between the reflector sheet and the brightness enhancement film. The brightness enhancement film may include a plurality of three dimensional light extraction features configured to bend at least some light rays passing through the brightness enhancement film toward the direction normal to the principal plane of the lighting panel. The light extraction features may be random features.

[0016] The brightness enhancement film may be configured to limit direct emission from the lighting panel of light emitted by the plurality of solid state light emitting devices to thereby encourage light recycling/diffusion in the lighting panel. In some embodiments, the light extraction features include fresnel-type lenses, and/or the brightness enhancement film may be configured to substantially collimate light emitted by the lighting panel.

[0017] The lighting panel may further include a heatsink panel on a second side of the at least one tile opposite to the first side and configured to draw heat away from the at least one tile in a direction opposite to a direction of light emission from the at least one tile. The heatsink panel may include black anodized aluminum.

[0018] The heatsink panel may include a plurality of heatsink features configured to reduce a thermal resistance of the heatsink panel. The plurality of heatsink features may include cooling fins. Respective ones of the plurality of heatsink features may be aligned with corresponding ones of the plurality of solid state light emitting devices.

[0019] Some embodiments of the invention provide a luminaire adapted for general illumination. The luminaire includes a lighting panel including at least one tile, a plurality of solid state lighting devices electrically connected in a string and arranged on a first side of the at least one tile and configured to emit light at a dominant wavelength, a reflector sheet on the first side of the at least one tile, and a brightness enhancement film on the reflector sheet. The reflector sheet may be arranged between the at least one tile and the brightness enhancement film. The luminaire further includes a current supply circuit configured to supply an on-state drive current to the string in response to a control signal, a photosensor arranged to receive light from at least one of the plurality of solid state lighting devices, and a control system configured to receive an output signal from the photosensor and to adjust the control signal responsive to the output signal of the photosensor to thereby adjust an average current supplied to the string by the current supply circuit.

[0020] The current supply circuit may include a closed loop variable voltage boost converter current source. The control system may be configured to sample the output of the photosensor when current may be not being supplied to the string of solid state lighting devices to obtain an ambient light value. The control system may be configured to decrease average current to the string as the ambient light value increases.

[0021] The control system may be configured to sample the photosensor during an interval in which current may be being supplied to the string in order to obtain a brightness value. The control system may be configured to decrease the average current to the first string as the brightness value increases.

[0022] The control system may be configured to adjust the average current supplied to the string based on the ambient light value and the brightness value.

[0023] The control system may be configured to adjust the average current supplied to the string based on a difference between the ambient light value and the brightness value.

[0024] The control system may be configured to adjust the average current supplied to the string based on a ratio of the ambient light value and the brightness value. In some embodiments, the control system may be configured to maintain an average luminosity of the first string independent of an ambient/background illumination.

[0025] The control system may be configured to maintain a relationship between an ambient/background illumination and an average luminosity of the string by providing a first feedback signal with respect to the ambient light value and a second feedback signal with respect to the brightness value.

[0026] The control signal may include a pulse width modulation (PWM) signal, and the control system may be configured to control an average current supplied to the string by varying a duty cycle of the PWM signal.

[0027] The control system may be configured to control an average current supplied to the string by varying a pulse frequency of the control signal.

[0028] The current supply circuit may be configured to maintain the on-state current supplied to the string at a substantially constant value even as the average current supplied to the string may be varied.

[0029] The control system may include a color management unit coupled to the photosensor and configured to sample and process the output signal of the photosensor and to provide the processed output signal to the control system.

[0030] The luminaire may further include a temperature sensor configured to sense a temperature associated with the lighting panel, the control system may be configured to adjust an average current supplied to the first string in response to a change in the sensed temperature.

[0031] A luminaire according to further embodiments of the invention includes a lighting panel including at least one tile and at least a first string of solid state lighting devices on a first side of the at least one tile and configured to emit light at a first dominant wavelength and a second string of solid state lighting devices configured to emit light at a second dominant wavelength, different from the first dominant wavelength. The lighting panel further includes a reflector sheet on the first side of the at least one tile, and a brightness enhancement film on the reflector sheet. The reflector sheet may be arranged between the at least one tile and the brightness enhancement film.

[0032] The luminaire further includes a first current supply circuit configured to supply an on-state drive current to the first string in response to a first control signal, and a second current supply circuit configured to supply an on-state drive current to the second string in response to a second control signal.

[0033] The luminaire further includes a photosensor arranged to receive light from at least one solid state lighting device in the first string and at least one solid state lighting device in the second string, and a control system configured to receive an output signal from the photosensor and to adjust the first control signal and/or the second control signal responsive to the output signal of the photosensor to thereby adjust an average current supplied to the first string by the first current supply circuit and/or to adjust an average current supplied to the second string by the second current supply circuit, such that the photosensor, the control system and the first and second current supply circuits thereby form a feedback loop for the lighting panel.

[0034] The first and second control signals may include pulse width modulation (PWM) signals, and the control system may be configured to control an average current supplied to the first and/or second string by varying a duty cycle of the first and/or second control signal.

[0035] A leading edge of a pulse of the first control signal occurs at a different time from a leading edge of a pulse of the second control signal. The leading edge of the pulse of the first control signal may be delayed from the leading edge of the pulse of the second control signal by a fixed delay and/or a variable delay. The variable delay may change within a range of delay intervals that may be random, chaotic or determined by a sweep function, table or other technique, and/or may be dependent on the pulse width of the first control signal and/or the second control signal.

BRIEF DESCRIPTION OF THE DRAWINGS

[0036] The accompanying drawings, which are included to provide a further understanding of the invention and are incorporated in and constitute a part of this application, illustrate certain embodiment(s) of the invention. In the drawings:

[0037] FIG. **1** is a front view of a solid state lighting tile in accordance with some embodiments of the invention;

[0038] FIG. **2** is a top view of a packaged solid state lighting device including a plurality of LEDs in accordance with some embodiments of the invention;

[0039] FIG. **3** is a schematic circuit diagram illustrating the electrical interconnection of LEDs in a solid state lighting tile in accordance with some embodiments of the invention;

[0040] FIG. **4**A is a front view of a bar assembly including multiple solid state lighting tiles in accordance with some embodiments of the invention;

[0041] FIG. **4**B is a front view of a lighting panel in accordance with some embodiments of the invention including multiple bar assemblies;

[0042] FIGS. **5**A-**5**B are cross sectional illustrations of lighting panels in accordance with some embodiments of the invention;

[0043] FIGS. **6**A-**6**B are schematic illustrations of a brightness enhancement film according to some embodiments of the invention;

[0044] FIG. **7** is a cross sectional illustration of a lighting panel in accordance with further embodiments of the invention;

[0045] FIG. **8** is a schematic diagram illustrating a luminaire according to some embodiments of the invention;

[0046] FIGS. **9**A-**9**D are a schematic diagrams illustrating possible configurations of photosensors on a lighting panel in accordance with some embodiments of the invention;

[0047] FIGS. **10**-**11** are schematic diagrams illustrating elements of a lighting panel system according to some embodiments of the invention;

[0048] FIG. **12** is a schematic circuit diagram of a current supply circuit according to some embodiments of the invention;

[0049] FIGS. **13**-**15** are flowchart diagrams illustrating operations according to some embodiments of the invention; and

[0050] FIG. **16** is a schematic illustration of a lighting panel according to some embodiments of the invention.

DETAILED DESCRIPTION OF EMBODIMENTS OF THE INVENTION

[0051] Embodiments of the present invention now will be described more fully hereinafter with reference to the

accompanying drawings, in which embodiments of the invention are shown. This invention may, however, be embodied in many different forms and should not be construed as limited to the embodiments set forth herein. Rather, these embodiments are provided so that this disclosure will be thorough and complete, and will fully convey the scope of the invention to those skilled in the art. Like numbers refer to like elements throughout.

[0052] It will be understood that, although the terms first, second, etc. may be used herein to describe various elements, these elements should not be limited by these terms. These terms are only used to distinguish one element from another. For example, a first element could be termed a second element, and, similarly, a second element could be termed a first element, without departing from the scope of the present invention. As used herein, the term "and/or" includes any and all combinations of one or more of the associated listed items.

[0053] It will be understood that when an element such as a layer, region or substrate is referred to as being "on" or extending "onto" another element, it can be directly on or extend directly onto the other element or intervening elements may also be present. In contrast, when an element is referred to as being "directly on" or extending "directly onto" another element, there are no intervening elements present. It will also be understood that when an element is referred to as being "connected" or "coupled" to another element, it can be directly connected or coupled to the other element or intervening elements may be present. In contrast, when an element is referred to as being "directly connected" or "directly coupled" to another element, there are no intervening elements present.

[0054] Relative terms such as "below" or "above" or "upper" or "lower" or "horizontal" or "vertical" or "front" or "back" may be used herein to describe a relationship of one element, layer or region to another element, layer or region as illustrated in the figures. It will be understood that these terms are intended to encompass different orientations of the device in addition to the orientation depicted in the figures.

[0055] The terminology used herein is for the purpose of describing particular embodiments only and is not intended to be limiting of the invention. As used herein, the singular forms "a", "an" and "the" are intended to include the plural forms as well, unless the context clearly indicates otherwise. It will be further understood that the terms "comprises""comprising,""includes" and/or "including" when used herein, specify the presence of stated features, integers, steps, operations, elements, and/or components, but do not preclude the presence or addition of one or more other features, integers, steps, operations, elements, components, and/or groups thereof.

[0056] Unless otherwise defined, all terms (including technical and scientific terms) used herein have the same meaning as commonly understood by one of ordinary skill in the art to which this invention belongs. It will be further understood that terms used herein should be interpreted as having a meaning that is consistent with their meaning in the context of this disclosure and the relevant art and will not be interpreted in an idealized or overly formal sense unless expressly so defined herein.

[0057] The present invention is described below with reference to flowchart illustrations and/or block diagrams of methods, systems and computer program products according to embodiments of the invention. It will be understood that some blocks of the flowchart illustrations and/or block diagrams, and combinations of some blocks in the flowchart illustrations and/or block diagrams, can be implemented by computer program instructions. These computer program instructions may be stored or implemented in a microcontroller, microprocessor, digital signal processor (DSP), field programmable gate array (FPGA), a state machine, programmable logic controller (PLC) or other processing circuit, general purpose computer, special purpose computer, or other programmable data processing apparatus such as to produce a machine, such that the instructions, which execute via the processor of the computer or other programmable data processing apparatus, create means for implementing the functions/acts specified in the flowchart and/or block diagram block or blocks.

[0058] These computer program instructions may also be stored in a computer readable memory that can direct a computer or other programmable data processing apparatus to function in a particular manner, such that the instructions stored in the computer readable memory produce an article of manufacture including instruction means which implement the function/act specified in the flowchart and/or block diagram block or blocks.

[0059] The computer program instructions may also be loaded onto a computer or other programmable data processing apparatus to cause a series of operational steps to be performed on the computer or other programmable apparatus to produce a computer implemented process such that the instructions which execute on the computer or other programmable apparatus provide steps for implementing the functions/acts specified in the flowchart and/or block diagram block or blocks. It is to be understood that the functions/acts noted in the blocks may occur out of the order noted in the operational illustrations. For example, two blocks shown in succession may in fact be executed substantially concurrently or the blocks may sometimes be executed in the reverse order, depending upon the functionality/acts involved. Although some of the diagrams include arrows on communication paths to show a primary direction of communication, it is to be understood that communication may occur in the opposite direction to the depicted arrows.

[0060] Referring now to FIG. **1**, a solid state lighting tile **10** is shown that may be used as a functional building block to create a large area planar light source. However, it will be understood that a large area planar light source may include only one tile. A solid state lighting tile **10** may include thereon a number of solid state lighting elements **12** arranged in a regular and/or irregular one- or two-dimensional array. The tile **10** may include, for example, a printed circuit board (PCB) on which one or more circuit elements, such as discrete light emitting components, may be mounted. In particular, a tile **10** may include a metal core PCB (MCPCB) including a metal core having thereon a polymer coating on which patterned metal traces (not shown) may be formed. MCPCB material, and material similar thereto, is commercially available from, for example, The Bergquist Company. The PCB may further include heavy clad (4 oz. copper or more) and/or conventional FR-4 PCB material with thermal vias. MCPCB material may provide improved thermal performance compared to con-

ventional PCB material. However, MCPCB material may also be heavier than conventional PCB material, which may not include a metal core.

[0061] In the embodiments illustrated in FIG. **1**, the lighting elements **12** are multi-chip clusters of four solid state emitting devices per cluster. In the tile **10**, four lighting elements **12** are serially arranged in a first path **20**, while four lighting elements **12** are serially arranged in a second path **21**. The lighting elements **12** of the first path **20** are connected, for example via printed circuits, to a set of four anode contacts **22** arranged at a first end of the tile **10**, and a set of four cathode contacts **24** arranged at a second end of the tile **10**. The lighting elements **12** of the second path **21** are connected to a set of four anode contacts **26** arranged at the second end of the tile **10**, and a set of four cathode contacts **28** arranged at the first end of the tile **10**.

[0062] In some embodiments of the invention, the lighting elements **12** are chip-on-board clusters including one or more LEDs configured to emit in the blue or UV spectrum. A wavelength conversion material is arranged to receive light emitted by the LEDs and to responsively emit a longer wavelength light, such as a red, green, blue and/or yellow light. The emitted light may combine with other light to produce a white light. In some embodiments, the lighting elements **12** include blue LEDs coated with a wavelength conversion material including at least a yellow phosphor. As is known in the art, yellow light emitted by the phosphor may combine with unconverted blue light emitted by the LEDs to produce a white light. A lighting element **12** may further include a red-emitting phosphor. Red light from the red emitting phosphor may combine with the blue and yellow light emitted by the LEDs and the yellow phosphor, respectively, to produce a warmer white light having better color rendering characteristics.

[0063] The solid state lighting elements **12** may include, for example, organic and/or inorganic light emitting devices. An example of a solid state lighting element **12'** for high power illumination applications according to some other embodiments is illustrated in FIG. **2**. Instead of a chip-on-board arrangement, a solid state lighting element **12'** may include a packaged discrete electronic component including a carrier substrate **13** on which a plurality of LED chips **16**A-**16**D are mounted.

[0064] The LED chips **16**A-**16**D of a light emitting element **12** or **12'** may include at least a red LED **16**A, a green LED **16**B and a blue LED **16**C. The blue and/or green LEDs may be InGaN-based blue and/or green LED chips available from Cree, Inc., the assignee of the present invention. The red LEDs may be, for example, AlInGaP LED chips available from Epistar, Osram and others. The lighting device **12** may include an additional green LED **16**D in order to make more green light available.

[0065] In some embodiments, the LEDs **16** may have a square or rectangular periphery with an edge length of about 900 μm or greater (i.e. so-called "power chips." However, in other embodiments, the LED chips **16** may have an edge length of 500 μm or less (i.e. so-called "small chips"). In particular, small LED chips may operate with better electrical conversion efficiency than power chips. For example, green LED chips with a maximum edge dimension less than 500 microns and as small as 260 microns, commonly have a higher electrical conversion efficiency than 900 micron chips, and are known to typically produce 55 lumens of luminous flux per Watt of dissipated electrical power and as much as 90 lumens of luminous flux per Watt of dissipated electrical power.

[0066] As further illustrated in FIG. **2**, the LEDs **16**A-**16**D may be covered by an encapsulant **14**, which may be clear and/or may include light scattering particles, phosphors, and/or other elements to achieve a desired emission pattern, color and/or intensity. While not illustrated in FIG. **2**, the lighting device **12** may further include a reflector cup surrounding the LEDs **16**A-**16**D, a lens mounted above the LEDs **16**A-**16**D, one or more heat sinks for removing heat from the lighting device, an electrostatic discharge protection chip, and/or other elements.

[0067] LED chips **16**A-**16**D of the lighting elements **12** in the tile **10** may be electrically interconnected as shown in the schematic circuit diagram in FIG. **3**. As shown therein, the LEDs may be interconnected such that the blue LEDs **16**A in the first path **20** are connected in series to form a string **20**A. Likewise, the first green LEDs **16**B in the first path **20** may be arranged in series to form a string **20**B, while the second green LEDs **16**D may be arranged in series to form a separate string **20**D. The red LEDs **16**C may be arranged in series to form a string **20**C. Each string **20**A-**20**D may be connected to an anode contact **22**A-**22**D arranged at a first end of the tile **10** and a cathode contact **24**A-**24**D arranged at the second end of the tile **10**, respectively.

[0068] A string **20**A-**20**D may include all, or less than all, of the corresponding LEDs in the first path **20** or the second path **21**. For example, the string **20**A may include all of the blue LEDs from all of the lighting elements **12** in the first path **20**. Alternatively, a string **20**A may include only a subset of the corresponding LEDs in the first path **20**. Accordingly the first path **20** may include four serial strings **20**A-**20**D arranged in parallel on the tile **10**.

[0069] The second path **21** on the tile **10** may include four serial strings **21**A, **21**B, **21**C, **21**D arranged in parallel. The strings **21**A to **21**D are connected to anode contacts **26**A to **26**D, which are arranged at the second end of the tile **10** and to cathode contacts **28**A to **28**D, which are arranged at the first end of the tile **10**, respectively.

[0070] It will be appreciated that, while the embodiments illustrated in FIGS. **1**-**3** include four LED chips **16** per lighting element **12** which are electrically connected to form at least four strings of LEDs **16** per path **20**, **21**, more and/or fewer than four LED chips **16** may be provided per lighting device **12**, and more and/or fewer than four LED strings may be provided per path **20**, **21** on the tile **10**. For example, a lighting device **12** may include only one green LED chip **16**B, in which case the LEDs may be connected to form three strings per path **20**, **21**. Likewise, in some embodiments, the two green LED chips in a lighting device **12** may be connected in serial to one another, in which case there may only be a single string of green LED chips per path **20**, **22**. Further, a tile **10** may include only a single path **20** instead of plural paths **20**, **21** and/or more than two paths **20**, **21** may be provided on a single tile **10**. In addition, the lighting devices **12** may have a single emission color and may be combined with a wavelength conversion phosphor to produce a desired color of light.

[0071] Multiple tiles **10** may be assembled to form a larger lighting bar assembly **30** as illustrated in FIG. **4**A. As shown

therein, a bar assembly **30** may include two or more tiles **10**, **10'**, **10"** connected end-to-end. Accordingly, referring to FIGS. **3** and **4**, the cathode contacts **24** of the first path **20** of the leftmost tile **10** may be electrically connected to the anode contacts **22** of the first path **20** of the central tile **10'**, and the cathode contacts **24** of the first path **20** of the central tile **10'** may be electrically connected to the anode contacts **22** of the first path **20** of the rightmost tile **10"**, respectively. Similarly, the anode contacts **26** of the second path **21** of the leftmost tile **10** may be electrically connected to the cathode contacts **28** of the second path **21** of the central tile **10'**, and the anode contacts **26** of the second path **21** of the central tile **10'** may be electrically connected to the cathode contacts **28** of the second path **21** of the rightmost tile **10"**, respectively.

[**0072**] Furthermore, the cathode contacts **24** of the first path **20** of the rightmost tile **10"** may be electrically connected to the anode contacts **26** of the second path **21** of the rightmost tile **10"** by a loopback connector **35**. For example, the loopback connector **35** may electrically connect the cathode **24**A of the string **20**A of blue LED chips **16**A of the first path **20** of the rightmost tile **10"** with the anode **26**A of the string **21**A of blue LED chips of the second path **21** of the rightmost tile **10"**. In this manner, the string **20**A of the first path **20** may be connected in series with the string **21**A of the second path **21** by a conductor **35**A of the loopback connector **35** to form a single string **23**A of blue LED chips **16**. The other strings of the paths **20**, **21** of the tiles **10**, **10'**, **10"** may be connected in a similar manner.

[**0073**] The loopback connector **35** may include an edge connector, a flexible wiring board, or any other suitable connector. In addition, the loop connector may include printed traces formed on/in the tile **10**.

[**0074**] While the bar assembly **30** shown in FIG. **4**A is a one dimensional array of tiles **10**, other configurations are possible. For example, the tiles **10** could be connected in a two-dimensional array in which the tiles **10** are all located in the same plane, or in a three dimensional configuration in which the tiles **10** are not all arranged in the same plane. Furthermore the tiles **10** need not be rectangular or square, but could, for example, be hexagonal, triangular, or the like.

[**0075**] Referring to FIG. **4**B, in some embodiments, a plurality of bar assemblies **30** may be combined to form a lighting panel **40**, which may be used, for example, as a planar illumination source for general illumination. As shown in FIG. **4**B, a lighting panel **40** may include four bar assemblies **30**, each of which includes six tiles **10**. The rightmost tile **10** of each bar assembly **30** includes a loopback connector **35**. Accordingly, each bar assembly **30** may include four strings **23** of LEDs (i.e. one red, two green and one blue).

[**0076**] In some embodiments, a bar assembly **30** may include four LED strings **23** (one red, two green and one blue). Thus, a lighting panel **40** including nine bar assemblies may have 36 separate strings of LEDs. Moreover, in a bar assembly **30** including six tiles **10** with eight solid state lighting elements **12** each, an LED string **23** may include 48 LEDs connected in serial.

[**0077**] Referring to FIG. **5**A, a portion of a lighting panel **40** is shown in side view. The lighting panel **40** includes at least one tile **10** on which a plurality of lighting elements **12** are disposed on one side thereof. For simplicity, only a single tile **10** is shown in FIG. **5**A. In order to provide and/or improve light recycling in the lighting panel **40**, a reflector sheet **50** may be provided on the same side of the tile **10** as the lighting elements **12**. In some embodiments, a single reflector sheet **50** may be provided having a length and width similar to the length and width of the two-dimensional lighting panel **40**. In other embodiments, a plurality of reflector sheets may be provided, and the reflector sheets **50** may be smaller than the lighting panel **40**. In some embodiments, each tile **10** may include a separate reflector sheet **50** thereon.

[**0078**] The reflector sheet **50** may include a plurality of apertures **42** therein, which apertures **42** may align with the lighting elements **12** on the tile **10**.

[**0079**] The reflector sheet **50** may be formed, for example, of a lightweight reflective material that both reflects and scatters incident light. In some embodiments, the reflector sheet **50** may include a white plastic foam material such as polyethylene-terephthalate (PET) plastic that has been processed into a lightweight white foam. Accordingly, in addition to reflecting incident light, the reflector sheet **50** may help disperse the incident light so that it is reflected in a random direction (i.e. a lambertian reflector), which may improve the uniformity of the lighting panel **40**.

[**0080**] In some embodiments, the apertures **42** may be circular apertures, and may have a sidewall **42**A that is angled with respect to the surface of the tiles **10**, thereby forming reflective optical cavities around the lighting elements **12**.

[**0081**] The lighting panel **40** may further include a brightness enhancement film **70** separated from the tile **10** and the reflector sheet **50** by a diffuser sheet **60**. The diffuser sheet **60** may scatter light passing therethrough in order to further diffuse light emitted by the lighting elements **12** and/or reflected by the reflector sheet **50**. Diffuser sheets are commonly used, for example, in display panels, as is known to those skilled in the art.

[**0082**] Additional embodiments of the invention are illustrated in FIG. **5**B, in which a pair of tiles **10** are shown. The panels **10** may be connected at respective opposing edges by an edge connector **13**, which may provide an electrical and/or mechanical connection between adjacent tiles **10**. In the embodiments of FIG. **5**B, a reflector sheet **55** is provided as a reflective coating on the same surface of the tiles **10** as the lighting elements **12**. The coating may include, for example, a white paint that is configured to reflect and scatter light incident thereon. A diffuser sheet **60** is provided on the reflector sheet **55**.

[**0083**] Also illustrated in FIG. **5**B are optional additional layers **75** and **77**, which may include layers configured to diffuse, polarize, collimate and/or reflect light. Such additional optional layers may be provided to improve the brightness and/or uniformity of light emitted by the panel **40**, and/or otherwise to provide a desired emission pattern.

[**0084**] As shown in FIG. **5**B, some light rays, such as light ray **73**A are emitted by the panel **40**, while other light rays, such as light ray **73**B, are reflected back into the panel **40** where they may be recycled (i.e. emitted at a different location/direction). Such light recycling may improve the uniformity of emission from the panel **40**.

[0085] As shown in FIGS. **6**A and **6**B, the brightness enhancement film **70** may include a plurality of three dimensional light extraction features **72** which may include sidewalls that are angled with respect to the principal plane of the lighting panel **40** such that light rays incident thereon, such as light ray **73**A, are bent toward a an optical axis **74** that is perpendicular to the principal plane **76** of the lighting panel **40** when they exit the film **70** or are internally reflected back into the diffuser sheet **60**, such as light ray **73**B, where they may be further recycled and/or diffused. In this manner, light emitted by the lighting panel **40** may be further collimated to increase the on-axis intensity of the emitted light.

[0086] In various embodiments, the shape of the light extraction features **72** may be regular, irregular and/or random to produce a desired effect on light passing through the diffuser sheet **60**. In some embodiments, the light extraction features may be defined to discourage and/or limit direct emission from the lighting panel **40** of light emitted by the lighting elements **12**, for example, in order to reduce "hot spots" near the locations of the lighting elements **12**. In other words, the light extraction features **72** may be designed and configured to encourage light recycling/diffusion in the lighting panel **40** in order to improve uniformity of emission from the lighting panel **40**. Thus, for example, the light extraction features **72** may include sidewalls sloped at an angle such that light traveling approximately parallel to an optical axis **74** of the lighting panel **40** (i.e. perpendicular to the plane of the panel **40**) will be totally internally reflected back into the diffuser sheet **60**. That is, light, such as the light ray **73**B may strike a sidewall of the light extraction feature **72** at an angle that is greater than the critical angle defined by the difference index of refraction between the brightness enhancement film **70** and the medium on the other side of the film **70** (which may be, for example, air). In other embodiments, the light extraction features may be arranged to form an array of fresnel-type lenses which may substantially collimate light emitted by the lighting elements **12**.

[0087] Referring to FIG. **7**, the lighting panel **40** may further include a heatsink panel **80** provided on a side of the tiles **10** opposite to the lighting elements **12**. Thus, heat may be extracted from the lighting panel **40** in a direction opposite to the direction of light emission. The heatsink panel **80** may include a plurality of heatsink features **82**, such as cooling fins, which may increase the surface area over which heat is dissipated, thereby decreasing the thermal resistance of the heatsink panel **80**. The heatsink features **82** may be positioned opposite the lighting elements **12**. The heatsink panel **80** may be coated and/or treated in a manner that decreases the thermal resistance of the heatsink panel. For example, the heatsink panel **80** may include black anodized aluminum for improved heat emission.

[0088] In operation, a lighting panel **40** will typically be mounted above an area to be illuminated, i.e., with the light emission of the lighting panel **40** directed downward. Such a configuration is shown in FIG. **16**, which illustrates a lighting panel **40** positioned above an object **82** to be illuminated. In that case, the heatsink features **82** will be oriented above the tiles **10** of the panel **40**, and heat generated by the luminaire in which the lighting panel **40** is used will be preferentially extracted upwards from the panel **40** (direction **80**), while light is directed downward (direction **74**), opposite to the direction of heat extraction. Thus, heat generated by the luminaire may be more efficiently extracted, since heat tends to rise. Heating of an airspace above the panel **40** by the heatsink panel **80** may also generate convection currents, which may contribute further to cooling the panel **40**.

[0089] A lighting panel **40** according to some embodiments of the invention may provide a substantially planar source of light that may be suitable for general illumination, such as illumination of rooms. Furthermore, a lighting panel **40** according to some embodiments of the invention may have significant advantages over a conventional fluorescent light source for general illumination applications. For example, due to the fact that multiple tiles **10** may be combined to form a single lighting panel **40**, a lighting panel **40** according to some embodiments of the invention may have a relatively large area. The use of distributed point sources such as lighting elements **12** may permit a large amount of optical power to be distributed over a relatively large area. For example, a lighting panel **40** having dimensions of 18"x25" has a total area of 450 square inches. Highly efficient solid state lighting sources **12** may generate in excess of 50 lumens per watt. Thus, a typical lighting panel **40** may generate approximately 5616 lumens, or about 12.5 lumens per square inch of the panel. This compares favorably with the approximately 7 lumens per square inch output by a typical fluorescent luminaire.

[0090] Furthermore, providing a large number of distributed lighting sources **12** in the panel **40** may improve the efficiency and/or uniformity of the panel **40**. For example, as discussed above, small LED chips (less than 500 μm^2 in area) are typically more efficient than larger, so-called "power chips." In addition, providing a large number of lighting sources **12** in the panel **40** may facilitate the diffusion and recycling of light in the panel **40**, which may improve uniformity.

[0091] For some types of LEDs, in particular blue and/or green LEDs, the forward voltage (Vf) may vary by as much as +/−0.75V from a nominal value from chip to chip at a standard drive current of 20 mA. A typical blue or green LED may have a Vf of 3.2 Volts. Thus, the forward voltage of such chips may vary by as much as 25%. For a string of LEDs containing 48 LEDs, the total Vf required to operate the string at 20 mA may vary by as much as +/−36V.

[0092] Accordingly, depending on the particular characteristics of the LEDs in a bar assembly, a string of one light bar assembly (e.g. the blue string) may require significantly different operating power compared to a corresponding string of another bar assembly. These variations may significantly affect the color and/or brightness uniformity of a lighting panel that includes multiple tiles **10** and/or bar assemblies **30**, as such Vf variations may lead to variations in brightness and/or hue from tile to tile and/or from bar to bar. For example, current differences from string to string may result in large differences in the flux, peak wavelength, and/or dominant wavelength output by a string. Variations in LED drive current on the order of 5% or more may result in unacceptable variations in light output from string to string and/or from tile to tile. Such variations may significantly affect the overall color gamut, or range of displayable colors, of a lighting panel.

[0093] In addition, the light output characteristics of LED chips may change during their operational lifetime. For

example, the light output by an LED may change over time and/or with ambient temperature.

[0094] In order to allow consistent, controllable light output characteristics for a lighting panel, some embodiments of the invention provide a lighting panel having two or more serial strings of LED chips. An independent current control circuit is provided for each of the strings of LED chips. Furthermore, current to each of the strings may be individually controlled, for example, by means of pulse width modulation (PWM) and/or pulse frequency modulation (PFM). The width of pulses applied to a particular string in a PWM scheme (or the frequency of pulses in a PFM scheme) may be based on a pre-stored pulse width (frequency) value that may be modified during operation based, for example, on a user input and/or a sensor input.

[0095] Accordingly, referring to FIG. **8**, a luminaire **200** according to some embodiments of the invention is shown. The luminaire **200**, which may be a lighting fixture for general illumination, includes a lighting panel **40**. The lighting panel **40** may include, for example, a plurality of bar assemblies **30**, which, as described above, may include a plurality of tiles **10**. However, it will be appreciated that embodiments of the invention may be employed in conjunction with lighting panels formed in other configurations. For example, some embodiments of the invention may be employed with solid state backlight panels that include a single, large area tile.

[0096] In particular embodiments, however, a lighting panel **40** may include a plurality of bar assemblies **30**, each of which may have four cathode connectors and four anode connectors corresponding to the anodes and cathodes of four independent strings **23** of LEDs each having the same dominant wavelength. For example, each bar assembly **23** may have a red string **23**A, two green strings **23**B, **23**D, and a blue string **23**C, each with a corresponding pair of anode/cathode contacts on one side of the bar assembly **30**. In particular embodiments, a lighting panel **40** may include nine bar assemblies **30**. Thus, a lighting panel **40** may include 36 separate LED strings.

[0097] A current driver **220** provides independent current control for each of the LED strings **23** of the lighting panel **40**. For example, the current driver **220** may provide independent current control for 36 separate LED strings in the lighting panel **40**. The current driver **220** may provide a constant current source for each of the 36 separate LED strings of the lighting panel **40** under the control of a controller **230**. In some embodiments, the controller **230** may be implemented using an 8-bit microcontroller such as a PIC18F8722 from Microchip Technology Inc., which may be programmed to provide pulse width modulation (PWM) control of 36 separate current supply blocks within the driver **220** for the 36 LED strings **23**.

[0098] Pulse width information for each of the 36 LED strings may be obtained by the controller **230** from a color management unit **260**, which may in some embodiments include a color management controller such as the Agilent HDJD-J822-SCR00 color management controller.

[0099] The color management unit **260** may be connected to the controller **230** through an I2C (Inter-Integrated Circuit) communication link **235**. The color management unit **260** may be configured as a slave device on an I2C communication link **235**, while the controller **230** may be configured as a master device on the link **235**. I2C communication links provide a low-speed signaling protocol for communication between integrated circuit devices. The controller **230**, the color management unit **260** and the communication link **235** may together form a feedback control system configured to control the light output from the lighting panel **40**. The registers R**1**-R**9**, etc., may correspond to internal registers in the controller **230** and/or may correspond to memory locations in a memory device (not shown) accessible by the controller **230**.

[0100] The controller **230** may include a register, e.g. registers R**1**-R**9**, G**1**A-G**9**A, B**1**-B**9**, G**1**B-G**9**B, for each LED string **23**, i.e. for a lighting unit with 36 LED strings **23**, the color management unit **260** may include at least 36 registers. Each of the registers is configured to store pulse width information for one of the LED strings **23**. The initial values in the registers may be determined by an initialization/calibration process. However, the register values may be adaptively changed over time based on user input **250** and/or input from one or more sensors **240** coupled to the lighting panel **40**.

[0101] The sensors **240** may include, for example, a temperature sensor **240**A, one or more photosensors **240**B, and/or one or more other sensors **240**C. In particular embodiments, a lighting panel **40** may include one photosensor **240**B for each bar assembly **30** in the lighting panel. However, in other embodiments, one photosensor **240**B could be provided for each LED string **30** in the lighting panel. In other embodiments, each tile **10** in the lighting panel **40** may include one or more photosensors **240**B.

[0102] In some embodiments, the photosensor **240**B may include photo-sensitive regions that are configured to be preferentially responsive to light having different dominant wavelengths. Thus, wavelengths of light generated by different LED strings **23**, for example a red LED string **23**A and a blue LED string **23**C, may generate separate outputs from the photosensor **240**B. In some embodiments, the photosensor **240**B may be configured to independently sense light having dominant wavelengths in the red, green and blue portions of the visible spectrum. The photosensor **240**B may include one or more photosensitive devices, such as photodiodes. The photosensor **240**B may include, for example, an Agilent HDJD-S831-QT333 tricolor photo sensor.

[0103] Sensor outputs from the photosensors **240**B may be provided to the color management unit **260**, which may be configured to sample such outputs and to provide the sampled values to the controller **230** in order to adjust the register values for corresponding LED strings **23** in order to correct variations in light output on a string-by-string basis. In some embodiments, an application specific integrated circuit (ASIC) may be provided on each tile **10** along with one or more photosensors **240**B in order to pre-process sensor data before it is provided to the color management unit **260**. Furthermore, in some embodiments, the sensor output and/or ASIC output may be sampled directly by the controller **230**.

[0104] The photosensors **240**B may be arranged at various locations within the lighting panel **40** in order to obtain representative sample data. Alternatively and/or additionally, light guides such as optical fibers may be provided in the lighting panel **40** to collect light from desired locations.

In that case, the photosensors **240**B could be provided, for example, on the back side of the lighting panel **40**. Further, an optical switch may be provided to switch light from different light guides which collect light from different areas of the lighting panel **40** to a photosensor **240**B. Thus, a single photosensor **240**B may be used to sequentially collect light from various locations on the lighting panel **40**.

[**0105**] The user input **250** may be configured to permit a user to selectively adjust attributes of the lighting panel **40**, such as color temperature, brightness, hue, etc., by means of user controls such as input controls on a remote control panel.

[**0106**] The temperature sensor **240**A may provide temperature information to the color management unit **260** and/or the controller **230**, which may adjust the light output from the lighting panel on a string-to-string and/or color-to-color basis based on known/predicted brightness vs. temperature operating characteristics of the LED chips **16** in the strings **23**.

[**0107**] Various configurations of photosensors **240**B are shown in FIGS. **9**A-**9**D. For example, in the embodiments of FIG. **9**A, a single photosensor **240**B is provided in the lighting panel **40**. The photosensor **240**B may be provided at a location where it may receive an average amount of light from more than one tile/string in the lighting panel **40**.

[**0108**] In order to provide more extensive data regarding light output characteristics of the lighting panel **40**, more than one photosensor **240**B may be used. For example, as shown in FIG. **9**B, there may be one photosensor **240**B per bar assembly **30**. In that case, the photosensors **240**B may be located at ends of the bar assemblies **30** and may be arranged to receive an average/combined amount of light emitted from the bar assembly **30** with which they are associated.

[**0109**] As shown in FIG. **9**C, photosensors **240**B may be arranged at one or more locations within a periphery of the light emitting region of the lighting panel **40**. However in some embodiments, the photosensors **240**B may be located away from the light emitting region of the lighting panel **40**, and light from various locations within the light emitting region of the lighting panel **40** may be transmitted to the sensors **240**B through one or more light guides. For example, as shown in FIG. **9**D, light from one or more locations **249** within the light emitting region of the lighting panel **40** is transmitted away from the light emitting region via light guides **247**, which may be optical fibers that may extend through and/or across the tiles **10**. In the embodiments illustrated in FIG. **9**D, the light guides **247** terminate at an optical switch **245**, which selects a particular guide **247** to connect to the photosensor **240**B based on control signals from the controller **230** and/or from the color management unit **260**. It will be appreciated, however, that the optical switch **245** is optional, and that each of the light guides **245** may terminate at a photosensor **240**B. In further embodiments, instead of an optical switch **245**, the light guides **247** may terminate at a light combiner, which combines the light received over the light guides **247** and provides the combined light to a photosensor **240**B. The light guides **247** may extend across partially across, and/or through the tiles **10**. For example, in some embodiments, the light guides **247** may run behind the panel **40** to various light collection locations and then run through the panel at such locations. Furthermore, the photosensor **240**B may be mounted on a front side of the panel (i.e. on the side of the panel **40** on which the lighting devices **16** are mounted) or on a reverse side of the panel **40** and/or a tile **10** and/or bar assembly **30**.

[**0110**] Referring now to FIG. **10**, a current driver **220** may include a plurality of bar driver circuits **320**A-**320**D. One bar driver circuit **320**A-**320**D may be provided for each bar assembly **30** in a lighting panel **40**. In the embodiments shown in FIG. **7**, the lighting panel **40** includes four bar assemblies **30**. However, in some embodiments the lighting panel **210** may include nine bar assemblies **30**, in which case the current driver **220** may include nine bar driver circuits **320**. As shown in FIG. **11**, in some embodiments, each bar driver circuit **320** may include four current supply circuits **340**A-**340**D, i.e., one current supply circuit **340**A-**340**D for each LED string **23**A-**23**D of the corresponding bar assembly **30**. Operation of the current supply circuits **340**A-**340**B may be controlled by control signals **342** from the controller **230**.

[**0111**] A current supply circuit **340** according to some embodiments of the invention is illustrated in more detail in FIG. **12**. As shown therein, a current supply circuit **340** may include a PWM controller U**1**, a transistor Q**1**, resistors R**1**-R**3** and diodes D**1**-D**3** arranged as shown in FIG. **12**. The current supply circuit **340** receives an input voltage Vin. The current supply circuit **340** also receives a clock signal CLK and a pulse width modulation signal PWM from the controller **230**. The current supply circuit **340** is configured to provide a substantially constant current to a corresponding LED string **23** via output terminals V+ and V−, which are connected to the anode and cathode of the corresponding LED string, respectively. The constant current may be supplied with a variable voltage boost to account for differences in average forward voltage from string to string. The PWM controller U**1** may include, for example, an LM5020 Current Mode PWM controller from National Semiconductor Corporation.

[**0112**] The current supply circuit **340** is configured to supply current to the corresponding LED string **13** while the PWM input is a logic HIGH. Accordingly, for each timing loop, the PWM input of each current supply circuit **340** in the driver **220** is set to logic HIGH at the first clock cycle of the timing loop. The PWM input of a particular current supply circuit **340** is set to logic LOW, thereby turning off current to the corresponding LED string **23**, when a counter in the controller **230** reaches the value stored in a register of the controller **230** corresponding to the LED string **23**. Thus, while each LED string **23** in the lighting panel **40** may be turned on simultaneously, the strings may be turned off at different times during a given timing loop, which would give the LED strings different pulse widths within the timing loop. The apparent brightness of an LED string **23** may be approximately proportional to the duty cycle of the LED string **23**, i.e., the fraction of the timing loop in which the LED string **23** is being supplied with current.

[**0113**] An LED string **23** may be supplied with a substantially constant current during the period in which it is turned on. By manipulating the pulse width of the current signal, the average current passing through the LED string **23** may be altered even while maintaining the on-state current at a substantially constant value. Thus, the dominant wavelength of the LEDs **16** in the LED string **23**, which may vary with applied current, may remain substantially stable even though

the average current passing through the LEDs **16** is being altered. Similarly, the luminous flux per unit power dissipated by the LED string **23** may remain more constant at various average current levels than, for example, if the average current of the LED string **23** was being manipulated using a variable current source.

[**0114**] The value stored in a register of the controller **230** corresponding to a particular LED string may be based on a value received from the color management unit **260** over the communication link **235**. Alternatively and/or additionally, the register value may be based on a value and/or voltage level directly sampled by the controller **230** from a sensor **240**.

[**0115**] In some embodiments, the color management unit **260** may provide a value corresponding to a duty cycle (i.e. a value from 0 to 100), which may be translated by the controller **230** into a register value based on the number of cycles in a timing loop. For example, the color management unit **260** indicates to the controller **230** via the communication link **235** that a particular LED string **23** should have a duty cycle of 50%. If a timing loop includes 10,000 clock cycles, then assuming the controller increments the counter with each clock cycle, the controller **230** may store a value of 5000 in the register corresponding to the LED string in question. Thus, in a particular timing loop, the counter is reset to zero at the beginning of the loop and the LED string **23** is turned on by sending an appropriate PWM signal to the current supply circuit **340** serving the LED string **23**. When the counter has counted to a value of 5000, the PWM signal for the current supply circuit **340** is reset, turning the LED string off.

[**0116**] In some embodiments, the pulse repetition frequency (i.e. pulse repetition rate) of the PWM signal may be in excess of 60 Hz. In particular embodiments, the PWM period may be 5 ms or less, for an overall PWM pulse repetition frequency of 200 Hz or greater. A delay may be included in the loop, such that the counter may be incremented only 100 times in a single timing loop. Thus, the register value for a given LED string **23** may correspond directly to the duty cycle for the LED string **23**. However, any suitable counting process may be used provided that the brightness of the LED string **23** is appropriately controlled.

[**0117**] The register values of the controller **230** may be updated from time to time to take into account changing sensor values. In some embodiments, updated register values may be obtained from the color management unit **260** multiple times per second.

[**0118**] Furthermore, the data read from the color management unit **260** by the controller **230** may be filtered to limit the amount of change that occurs in a given cycle. For example, when a changed value is read from the color management unit **260**, an error value may be calculated and scaled to provide proportional control ("P"), as in a conventional PID (Proportional-Integral-Derivative) feedback controller. Further, the error signal may be scaled in an integral and/or derivative manner as in a PID feedback loop. Filtering and/or scaling of the changed values may be performed in the color management unit **260** and/or in the controller **230**.

[**0119**] Operations of some elements of the luminaire **200** are illustrated in FIGS. **13-15**. Referring to FIG. **13**, the string registers in the controller **230** are initialized (block **1010**). The initial register values may be stored in a non-volatile memory, such as a read-only memory (ROM), a non-volatile random access memory (NVRAM) or other storage device accessible by the controller **230**. The counter COUNT in the controller **230** is also reset to zero.

[**0120**] Control then passes to block **1020**, which determines if the counter COUNT is equal to zero. If so, the PWM outputs of each of the control lines **342** are set to logic HIGH (block **1030**). If not, block **1030** is bypassed. The controller **230** then selectively turns off the PWM output of any LED string whose register value is equal to COUNT (block **1040**). An optional delay is then introduced (block **1050**), and the COUNT value is incremented (block **1060**). Control then passes to block **1070**, which determines if the COUNT has reached a maximum value, which in some embodiments may be 100. If not, control passes to block **1020**. If the value of COUNT has reached the maximum value MAX_COUNT, the current timing loop has ended, and COUNT is reset to 0 (block **1080**).

[**0121**] Referring now to FIG. **14**, operations associated with selectively turning off the PWM signals for each of the LED strings **23** is illustrated as a process **1100**, which is repeated for each group of red, green and blue strings **23** in a lighting panel **40**. For example, the process **1100** may be repeated once for each bar assembly **30** of a lighting panel **40**. As shown in FIG. **14**, the controller **230** first determines if the count is equal to the register value of the red string register R**1** (block **1110**). If so, the PWM signal associated with the register R**1** is set to logic low, thereby turning off the LED string **23** associated therewith (block **1120**). Next, the controller **230** determines if the count is equal to the register value of the first green string register G**1**A (block **1130**). If so, the PWM signal associated with the register G**1**A is set to logic low, thereby turning off the LED string or strings **23** associated therewith (block **1140**). The same process may be repeated for the second green string register G**1**B. Alternatively, a single register may be used for both green strings. Finally, the controller **230** determines if the count is equal to the register value of the blue string register B**1** (block **1150**). If so, the PWM signal associated with the register B**1** is set to logic low, thereby turning off the LED string **23** associated therewith (block **1160**). The process **1100** is repeated for each bar assembly **30** in the lighting panel **40**.

[**0122**] In some embodiments, the controller **230** may cause the color management unit **260** to sample a photosensor **240**B when the lighting panel **40** is momentarily dark (i.e. when all of the light sources within the unit are momentarily switched off) in order to obtain a measure of ambient light (e.g. a dark signal value). The controller **230** may also cause the color management unit **260** to sample the photosensor **240**B during a time interval in which the panel **40** is lighted for at least a portion of the interval in order to obtain a measure of the luminaire brightness (e.g. a light signal value). For example, the controller **230** may cause the color management unit **260** to obtain a value from the photosensor that represents an average over an entire timing loop.

[**0123**] For example, referring to FIG. **15**, all LED strings in the lighting panel **40** are turned off (block **1210**), and the photosensor **240**B output is sampled to obtain a dark signal

value (block **1220**). The LED strings are then energized (block **1230**), and the panel output is integrated over an entire pulse period and sampled (block **1240**) to obtain a light signal value. The output of the lighting panel **40** is then adjusted based on the dark signal value and/or the light signal value (block **1250**)

[**0124**] The brightness of the lighting panel **40** may be adjusted to account for differences in ambient light. For example, in situations in which the level of ambient light is high, the brightness of the lighting panel **40** may be reduced via a negative feedback signal in order to maintain a substantially consistent level of light in the area to be illuminated. In other situations in which the level of ambient light is low, the luminaire brightness may be increased by a positive feedback signal in order to maintain a consistent level of light in the illuminated area. That is, since the level of ambient light in an illuminated area may vary due, for example, to variations in the amount of natural light in the illuminated area. According to some embodiments of the invention, the light output from the luminaire **200** may be varied in response to a level of ambient light. For example, if the level of ambient light in an illuminated area is high, the brightness of the luminaire **200** may be reduced. In an area illuminated by a plurality of luminaires **200**, it may be desirable to coordinate the measurement of ambient light among the luminaires **200**.

[**0125**] As explained above, the brightness of the lighting panel **40** may be adjusted by adjusting the pulse widths of the current pulses for one or more (or all) of the LED strings **23** in the lighting panel **40**. In some embodiments, the pulse widths may be adjusted based on a difference between the sensed luminaire brightness and the sensed ambient brightness. In other embodiments, the pulse widths may be adjusted based on a ratio of the sensed luminaire brightness (the light signal value) to the sensed ambient brightness (the dark signal value).

[**0126**] Accordingly, in some embodiments, the feedback loop formed by the lighting panel **40**, the photosensor **240**B, the color management unit **260** and the controller **230** may tend to maintain the average luminosity of the lighting panel **40** independent of ambient illumination. In other embodiments, the feedback loop may be configured to maintain a desired relationship between the average luminosity of the lighting panel **40** and the level of ambient illumination.

[**0127**] In some embodiments, the feedback loop may employ digital incremental logic. The digital incremental logic of the feedback loop may reference indices of a lookup table including a list of values such as duty cycle values.

[**0128**] As indicated above, in some embodiments of the invention, each of the PWM signals may be set to logic HIGH at the same time (i.e. at the beginning of a timing loop). In that case, all of the LEDs in the panel **40** will turn on at the same time within a given timing loop, but will turn off at different times depending on the register values associated with the various LED strings **23** in the lighting panel **40**. However, in other embodiments, the turn-on of one or more of the LED strings **23** may be staggered, so that all of the LED strings **23** are not being turned on simultaneously. In some cases, the PWM signal of at least one of the LED strings **23** may be delayed by a fixed and/or variable delay that causes the LED string **23** to turn on at a different time from other LED strings **23**. The delay may be provided in software, for example by providing an offset value that may be added to the register value. The offset value may be examined before the LED string is turned on.

[**0129**] Thus, for example, each LED string may have two associated values representing a start time and a stop time, or, alternatively, a start time and a duration. For example, the controller may maintain two values (START and STOP) for each LED string **23**. At the entry of the timing loop, all PWM values may be reset to logic LOW. In each cycle of the timing loop, the value of COUNT is compared to START. If the value of COUNT is greater than or equal to START, but less than the value of STOP, the PWM signal for the LED string **23** is turned/maintained at logic HIGH. However, if the value of COUNT is greater than STOP, the PWM signal for the LED string is reset to logic LOW.

[**0130**] In some embodiments, the timing delay (e.g. the value of START) may be fixed at a different level for each LED string **23** and/or groups of LED strings **23**. For example, timing delays may be set such that one red LED string **23**A has a different START value than another red LED string **23**A.

[**0131**] In further embodiments, a timing delay for each LED string may be randomly generated. The random timing delay may be generated for each timing loop and/or after a given number of timing loops have elapsed. A random delay may be provided within a minimum bound and a maximum bound. The minimum bound may be zero, and the maximum bound for a given LED string **23** may be the maximum count MAX_COUNT minus the string register value for the LED string **23** in question. For example, a pulse with a 60% duty cycle may be delayed by no more than 40% of the pulse period. This may ensure that the LED string **23** will remain on for the full pulse width, even if it is delayed.

[**0132**] By staggering the timing delays of the LED strings **23**, in a fixed or random fashion, all of the LED strings **23** may not switched from an off-state to an on-state simultaneously, which may reduce flicker and/or combined amplitude in the light output from the lighting panel **40** and/or may balance an external power factor of the lighting panel **40**.

[**0133**] Other methods may be employed in order to control the average luminosity of an LED string **23** and/or the lighting panel **40**. For example, instead of using pulse width modulation, a system may employ pulse frequency modulation. Modifications to the controller **230** and/or current driver **220** in order to accommodate pulse frequency modulation are generally known to those skilled in the art.

[**0134**] Same colored LED strings in a lighting panel need not be driven with the same pulse width. For example, a backlight panel **40** may include a plurality of red LED strings **23**, each of which may be driven with a different pulse width, resulting in a different average current level. Accordingly, some embodiments of the invention provide a closed loop digital control system for a lighting panel, such as an LCD backlight, that includes first and second LED strings **23** that include a plurality of LED chips **16** therein that emit narrow band optical radiation having a first dominant wavelength when energized, and third and fourth LED strings **23** that include a plurality of LED chips **16** that emit narrow band optical radiation having a second dominant wavelength, different from the first dominant wavelength.

[0135] In some embodiments, the first and second LED strings **23** are maintained at a different average current level than one another yet are driven at substantially the same on-state current. Likewise, the third and fourth LED strings are maintained at different average current levels than one another yet are driven at substantially the same on-state current.

[0136] The on-state current of the first and second LED strings **23** may be different than the on-state current of the third and fourth LED strings. For example, the on-state current used to drive red LED strings **23** may be different than the on-state current used to drive green and/or blue LED strings. The average current of a string **23** is proportional to the pulse width of the current through the string **23**. The ratio of average current between the first and second LED strings **23** may be maintained relatively constant, and/or the ratio of average current between the third and fourth LED strings **23** may be maintained relatively constant. Furthermore, the ratio of average current between the first and second LED strings **23** compared to the average current of the third and fourth LED strings **23** may be allowed to change as part of the closed loop control in order to maintain a desired white point.

[0137] In some embodiments, the on-state current level provided to a given LED string **23** may be adjusted by the current supply circuit **340** in response to commands from the controller **230**. In that case, a particular LED string may be driven at an on-state current level selected to adjust a dominant wavelength of a particular LED string **23**. For example, due to chip-to-chip variations in dominant wavelength, a particular LED string **23** may have an average dominant wavelength that is higher than an average dominant wavelength of other LED strings **23** of the same color within a lighting panel **40**. In that case, it may be possible to drive the higher-wavelength LED string at a slightly higher on-state current, which may cause the dominant wavelength of the LED string **23** to drop and better match that of the shorter-wavelength LED strings **23**.

[0138] In some embodiments, the initial on-state drive currents of each of the LED strings **23** may be calibrated by a calibration process in which each of the LED strings is individually energized and the light output from each string is detected using the photosensor **240**A. The dominant wavelength of each string may be measured, and an appropriate drive current may be calculated for each LED string in order to adjust the dominant wavelength as necessary. For example, the dominant wavelengths of each of the LED strings **23** of a particular color may be measured and the variance of the dominant wavelengths for a particular color may be calculated. If the variance of the dominant wavelengths for the color is greater than a predetermined threshold, or if the dominant wavelength of a particular LED string **23** is higher or lower than the average dominant wavelength of the LED strings **23** by a predetermined number of standard deviations, then the on-state drive current of one or more of the LED strings **23** may be adjusted in order to reduce the variance of dominant wavelengths. Other methods/algorithms may be used in order to correct/account for differences in dominant wavelength from string to string.

[0139] In the drawings and specification, there have been disclosed typical embodiments of the invention and, although specific terms are employed, they are used in a generic and descriptive sense only and not for purposes of limitation, the scope of the invention being set forth in the following claims.

That which is claimed is:

1. A lighting panel, comprising:

at least one tile having a first side parallel to a principal plane of the lighting panel;

a plurality of solid state lighting devices arranged on the first side of the at least one tile and configured to emit light;

a reflector sheet on the first side of the at least one tile; and

a brightness enhancement film on the reflector sheet, wherein the reflector sheet is arranged between the at least one tile and the brightness enhancement film and the brightness enhancement film is configured to preferentially emit light having a first orientation from the lighting panel and to preferentially reflect light having a second orientation, different from the first orientation, back into the lighting panel.

2. The lighting panel of claim 1, wherein the reflector sheet is configured to reflect and disperse light incident thereon.

3. The lighting panel of claim 1, wherein the reflector sheet includes a plurality of apertures therethrough, wherein respective ones of the plurality of apertures aligned with corresponding ones of the plurality of solid state lighting devices.

4. The lighting panel of claim 3, wherein respective ones of the apertures include angled sidewalls to thereby form reflective optical cavities around the corresponding ones of the plurality of solid state lighting devices.

5. The lighting panel of claim 1, wherein the reflector sheet comprises a plastic foam.

6. The lighting panel of claim 1, further comprising a diffuser sheet between the reflector sheet and the brightness enhancement film.

7. The lighting panel of claim 1, wherein the brightness enhancement film comprises a plurality of three dimensional light extraction features configured to bend at least some light rays passing through the brightness enhancement film toward the direction normal to the principal plane of the lighting panel.

8. The lighting panel of claim 7, wherein the light extraction features are random features.

9. The lighting panel of claim 7, wherein the brightness enhancement film is configured to limit direct emission from the lighting panel of light emitted by the plurality of solid state light emitting devices to thereby encourage light recycling/diffusion in the lighting panel.

10. The lighting panel of claim 7, wherein the light extraction features comprise fresnel-type lenses.

11. The lighting panel of claim 7, wherein the brightness enhancement film is configured to substantially collimate light emitted by the lighting panel.

12. The lighting panel of claim 1, further comprising a heatsink panel on a second side of the at least one tile opposite to the first side and configured to draw heat away from the at least one tile in a direction opposite to a direction of light emission from the at least one tile.

13. The lighting panel of claim 12, wherein the heatsink panel comprises black anodized aluminum.

14. The lighting panel of claim 13, wherein the heatsink panel comprises a plurality of heatsink features configured to reduce a thermal resistance of the heatsink panel.

15. The lighting panel of claim 14, wherein the plurality of heatsink features comprise cooling fins.

16. The lighting panel of claim 14, wherein respective ones of the plurality of heatsink features are aligned with corresponding ones of the plurality of solid state light emitting devices.

17. A luminaire adapted for general illumination, the luminaire comprising:

a lighting panel including at least one tile, a plurality of solid state lighting devices electrically connected in a string and arranged on a first side of the at least one tile and configured to emit light at a dominant wavelength, a reflector sheet on the first side of the at least one tile, and a brightness enhancement film on the reflector sheet, wherein the reflector sheet is arranged between the at least one tile and the brightness enhancement film;

a current supply circuit configured to supply an on-state drive current to the string in response to a control signal;

a photosensor arranged to receive light from at least one of the plurality of solid state lighting devices; and

a control system configured to receive an output signal from the photosensor and to adjust the control signal responsive to the output signal of the photosensor to thereby adjust an average current supplied to the string by the current supply circuit.

18. The luminaire of claim 17, wherein the current supply circuit comprises a closed loop variable voltage boost converter current source.

19. The luminaire of claim 17, wherein the control system is configured to sample the output of the photosensor when current is not being supplied to the string of solid state lighting devices to obtain an ambient light value.

20. The luminaire of claim 19, wherein the control system is configured to decrease average current to the string as the ambient light value increases.

21. The luminaire of claim 17, wherein the control system is configured to sample the photosensor during an interval in which current is being supplied to the string in order to obtain a brightness value.

22. The luminaire of claim 21, wherein the control system is configured to decrease the average current to the first string as the brightness value increases.

23. The luminaire of claim 22, wherein the control system is configured to adjust the average current supplied to the string based on the ambient light value and the brightness value.

24. The luminaire of claim 23, wherein the control system is configured to adjust the average current supplied to the string based on a difference between the ambient light value and the brightness value.

25. The luminaire of claim 23, wherein the control system is configured to adjust the average current supplied to the string based on a ratio of the ambient light value and the brightness value.

26. The luminaire of claim 23, wherein the control system is configured to maintain an average luminosity of the first string independent of an ambient/background illumination.

27. The luminaire of claim 23, wherein the control system is configured to maintain a relationship between an ambient/background illumination and an average luminosity of the string by providing a first feedback signal with respect to the ambient light value and a second feedback signal with respect to the brightness value.

28. The luminaire of claim 17, wherein the control signal comprises a pulse width modulation (PWM) signal, and wherein the control system is configured to control an average current supplied to the string by varying a duty cycle of the PWM signal.

29. The luminaire of claim 17, wherein the control system is configured to control an average current supplied to the string by varying a pulse frequency of the control signal.

30. The luminaire of claim 17, wherein the current supply circuit is configured to maintain the on-state current supplied to the string at a substantially constant value even as the average current supplied to the string is varied.

31. The luminaire of claim 17, wherein the control system comprises:

a color management unit coupled to the photosensor and configured to sample and process the output signal of the photosensor and to provide the processed output signal to the control system.

32. The luminaire of claim 17, further comprising:

a temperature sensor configured to sense a temperature associated with the lighting panel, wherein the control system is configured to adjust an average current supplied to the first string in response to a change in the sensed temperature.

33. A luminaire, comprising:

a lighting panel including at least one tile, at least a first string of solid state lighting devices on a first side of the at least one tile and configured to emit light at a first dominant wavelength and a second string of solid state lighting devices on the first side of the at least one tile and configured to emit light at a second dominant wavelength, different from the first dominant wavelength, a reflector sheet on the first side of the at least one tile, and a brightness enhancement film on the reflector sheet, wherein the reflector sheet is arranged between the at least one tile and the brightness enhancement film;

a first current supply circuit configured to supply an on-state drive current to the first string in response to a first control signal;

a second current supply circuit configured to supply an on-state drive current to the second string in response to a second control signal;

a photosensor arranged to receive light from at least one solid state lighting device in the first string and at least one solid state lighting device in the second string; and

a control system configured to receive an output signal from the photosensor and to adjust the first control signal and/or the second control signal responsive to the output signal of the photosensor to thereby adjust an average current supplied to the first string by the first current supply circuit and/or to adjust an average current supplied to the second string by the second current supply circuit, such that the photosensor, the

control system and the first and second current supply circuits thereby form a feedback loop for the lighting panel;

wherein the first and second control signals comprise pulse width modulation (PWM) signals, and wherein the control system is configured to control an average current supplied to the first and/or second string by varying a duty cycle of the first and/or second control signal.

34. The luminaire of claim 33, wherein a leading edge of a pulse of the first control signal occurs at a different time from a leading edge of a pulse of the second control signal.

35. The luminaire of claim 34, wherein the leading edge of the pulse of the first control signal is delayed from the leading edge of the pulse of the second control signal by a fixed delay.

36. The luminaire of claim 34, wherein the leading edge of the pulse of the first control signal is delayed from the leading edge of the pulse of the second control signal by a variable delay.

37. The luminaire of claim 36, wherein the variable delay changes within a range of delay intervals that is random, chaotic or determined by a sweep function, table or other technique, and/or is dependent on the pulse width of the first control signal and/or the second control signal.

* * * * *