US 20060187660A1

(19) United States

(12) Patent Application Publication

(10) Pub. No.: US 2006/0187660 A1

(43) Pub. Date: Aug. 24, 2006

Liu

(54) BACKLIGHT MODULE HAVING DEVICE FOR FASTENING LIGHTING UNITS

(75) Inventor: **Pang-Hsuan Liu**, Lungtam Hsiang (TW)

Correspondence Address:
GENUS LAW GROUP
LOWE HAUPTMAN & BERNER, LLP
1700 DIAGONAL ROAD, SUITE 300
ALEXANDRIA, VA 22314 (US)

(73) Assignee: **AU OPTRONICS CORPORATION**

(21) Appl. No.: **11/182,210**

(22) Filed: **Jul. 15, 2005**

(30) **Foreign Application Priority Data**

Feb. 18, 2005 (TW)..... 94104798

Publication Classification

(51) **Int. Cl.**
F21V 29/00 (2006.01)

(52) **U.S. Cl.** **362/294**; 362/249

(57) **ABSTRACT**

A device for fastening the lighting units in a backlight module is provided. A rigid board partially laps over the adjacent lighting unit or units. The rigid board and the backboard have holes respectively such that a bolt is passed through the holes and locked on a nut. Accordingly the rigid board exerts a compressing strength to fasten the adjacent lighting unit or units onto the backboard.

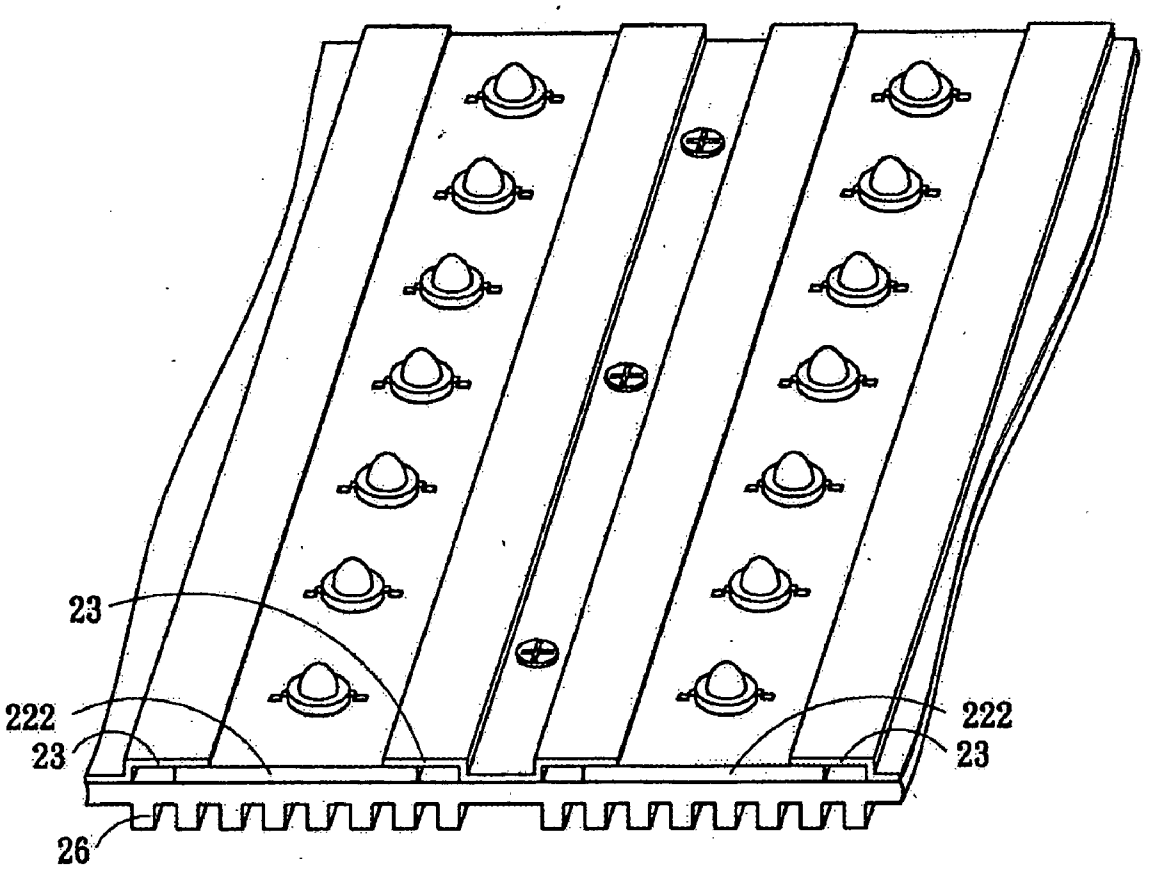

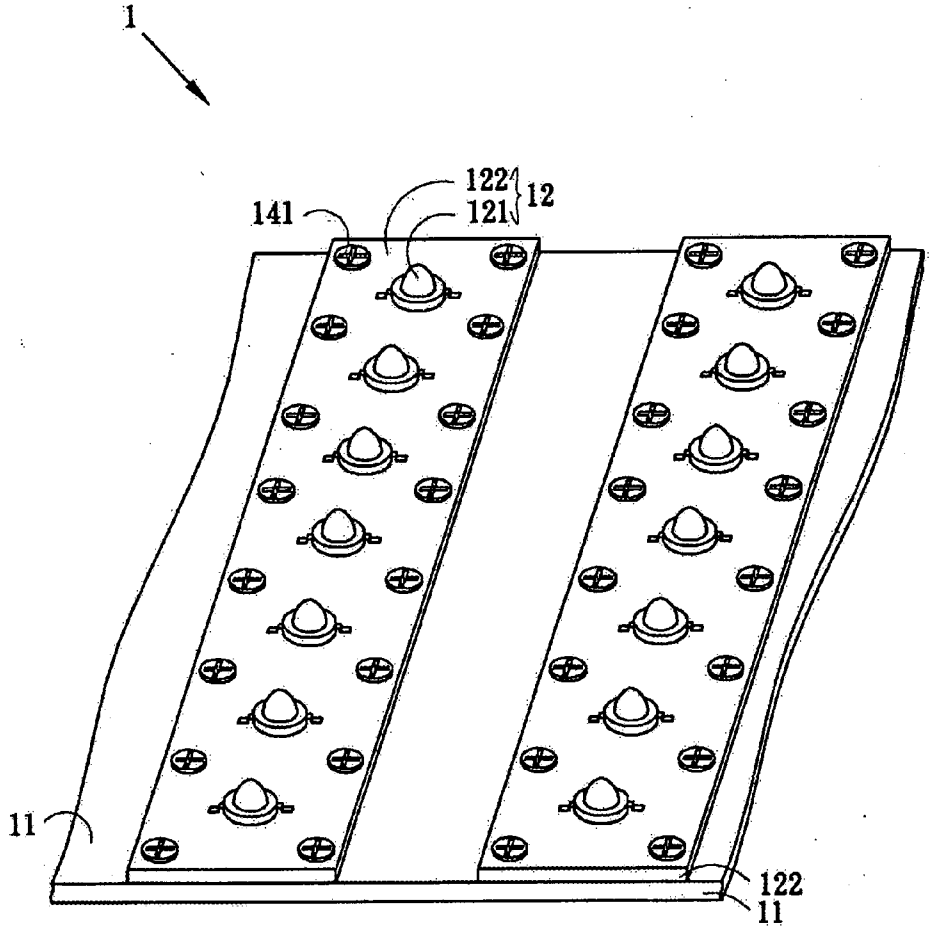

FIG. 1(Prior Art)

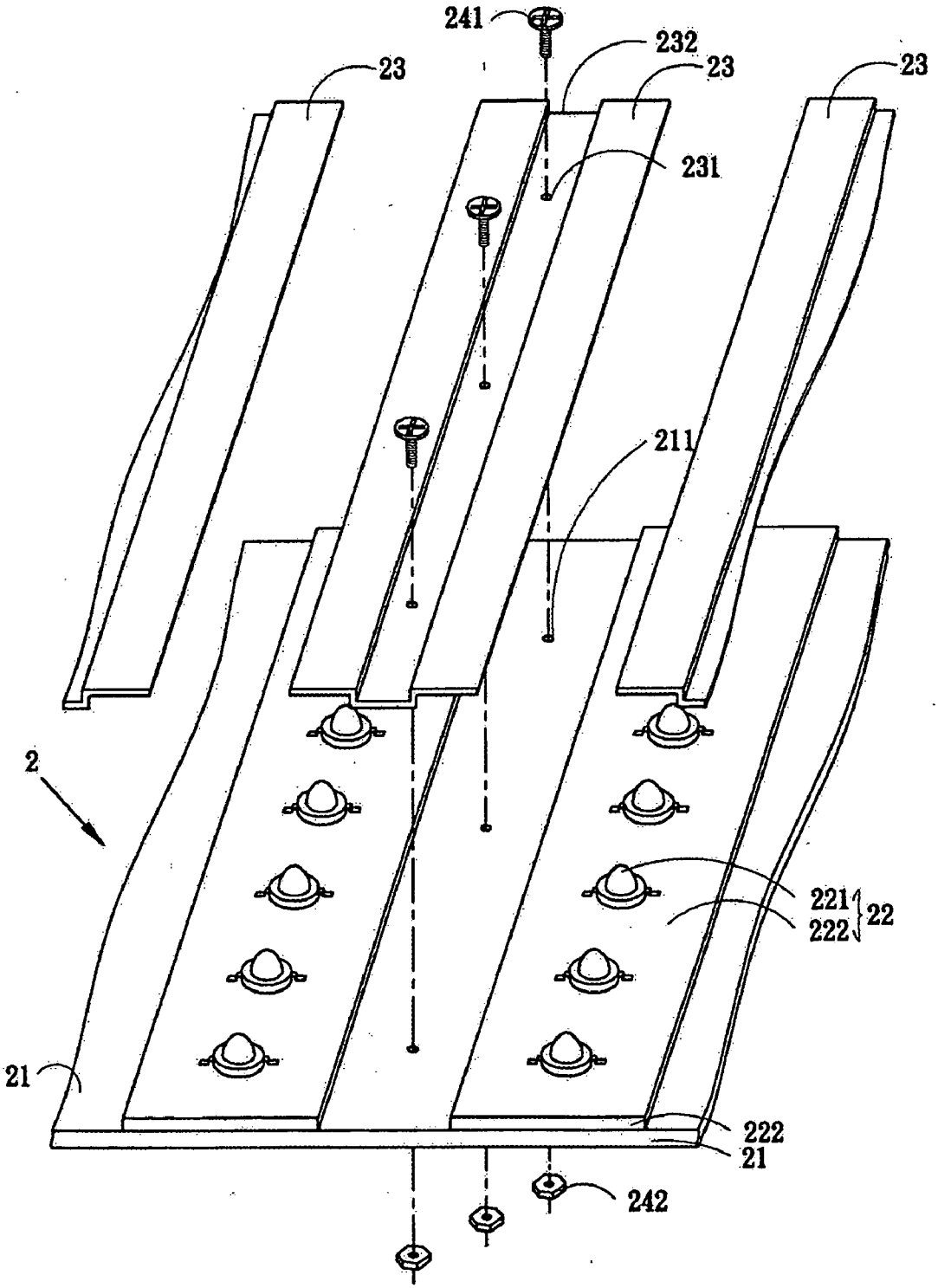

FIG. 2A

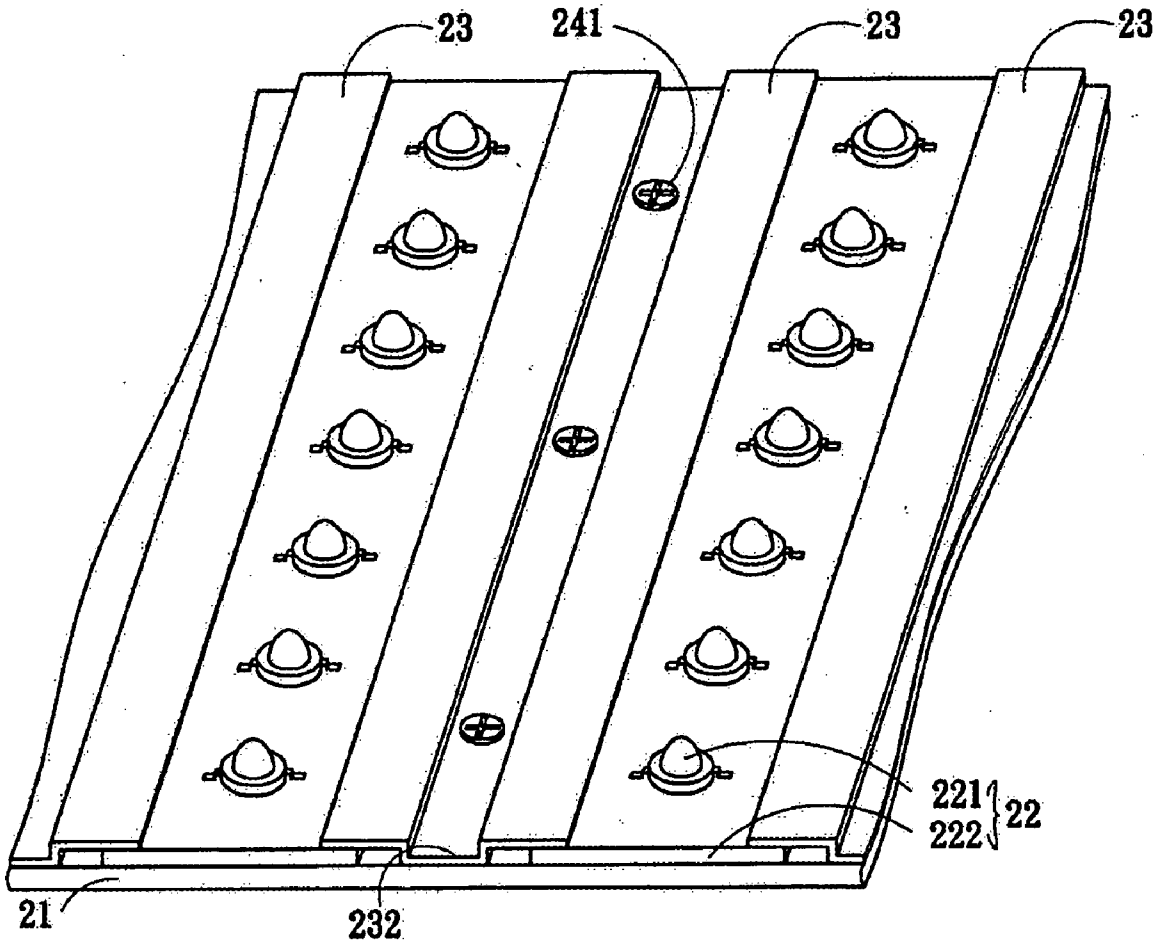

FIG. 2B

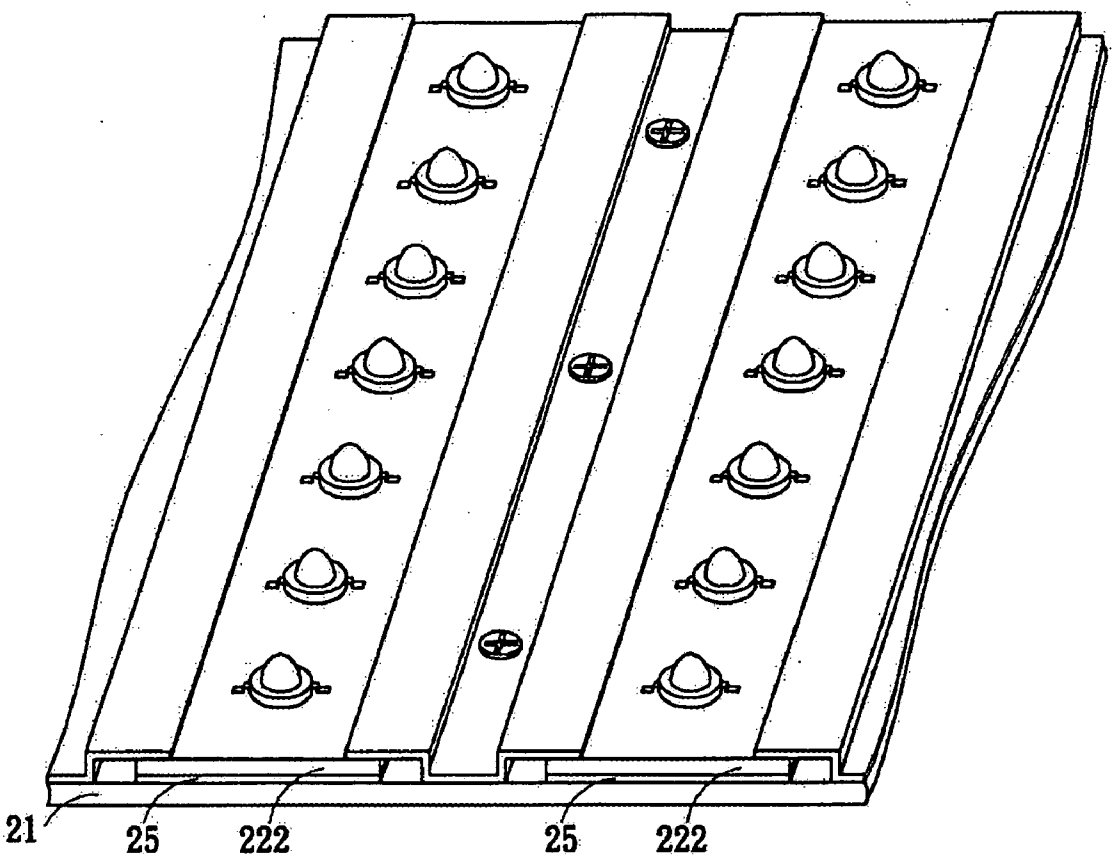

FIG. 2C

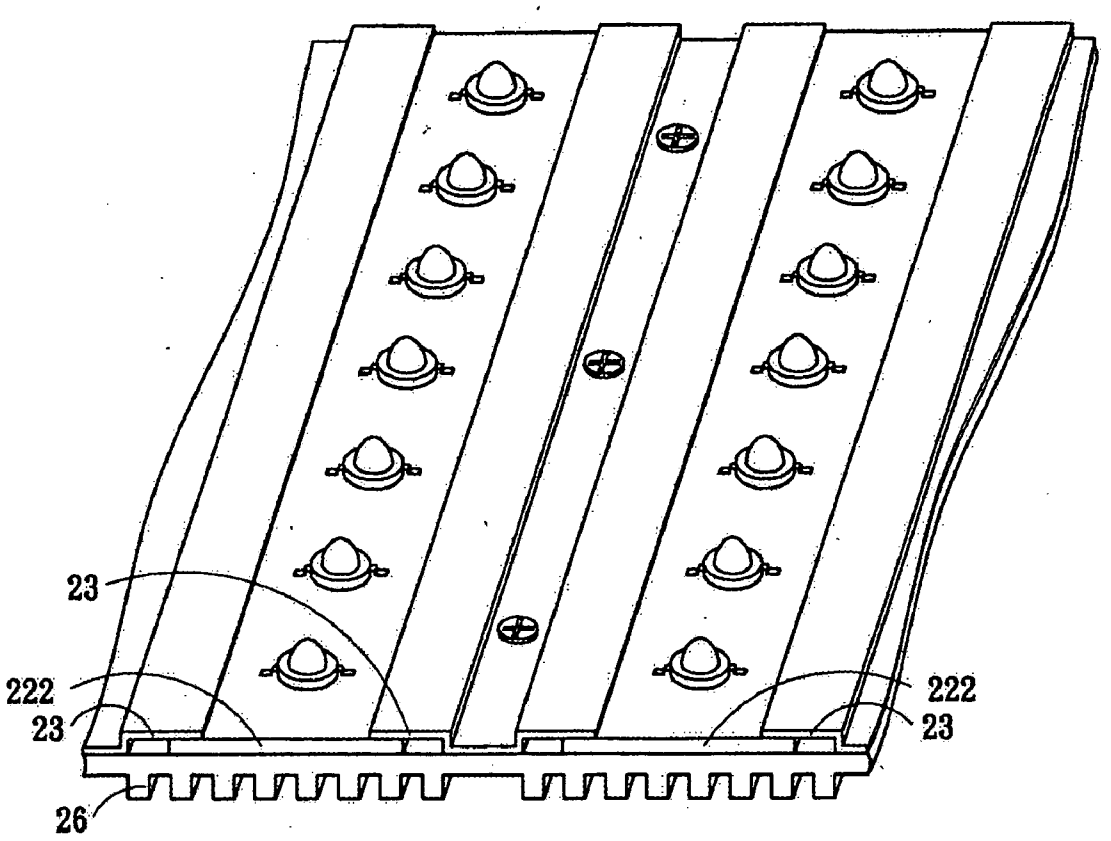

FIG. 2D

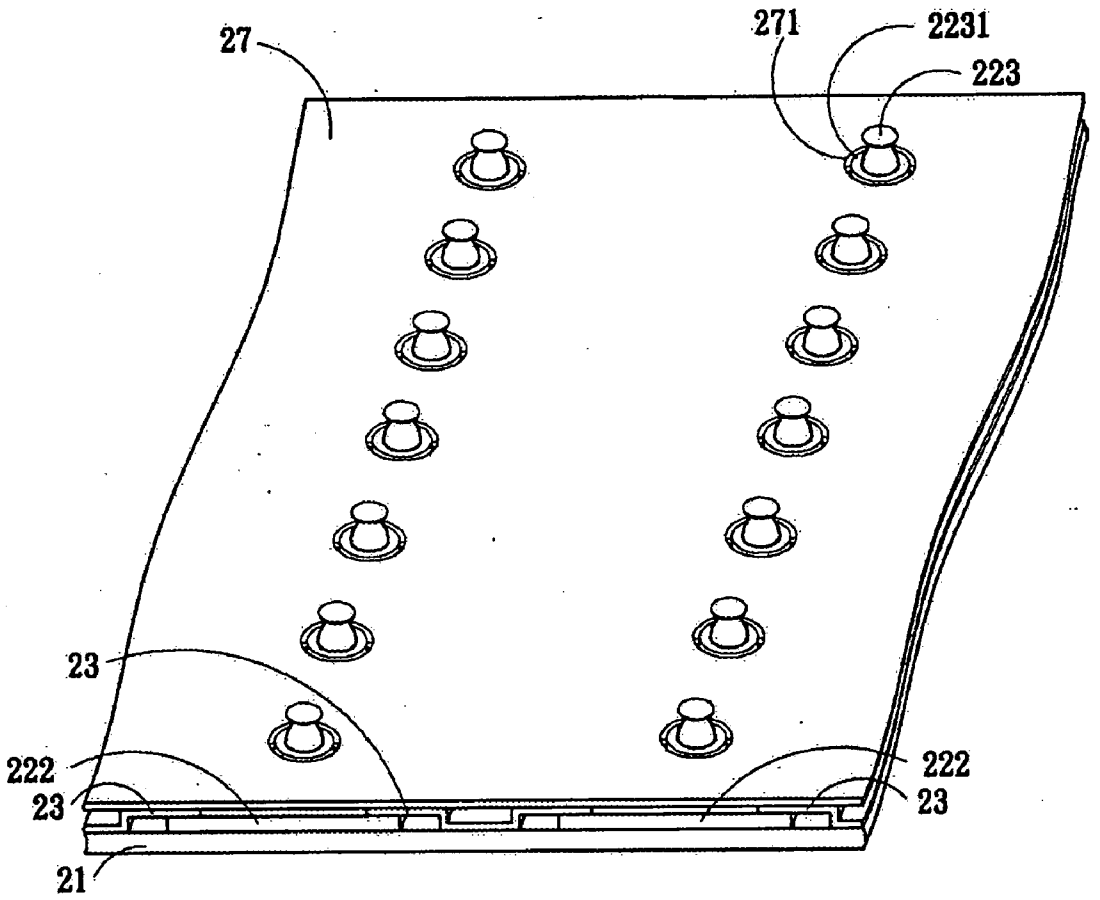

FIG. 2E

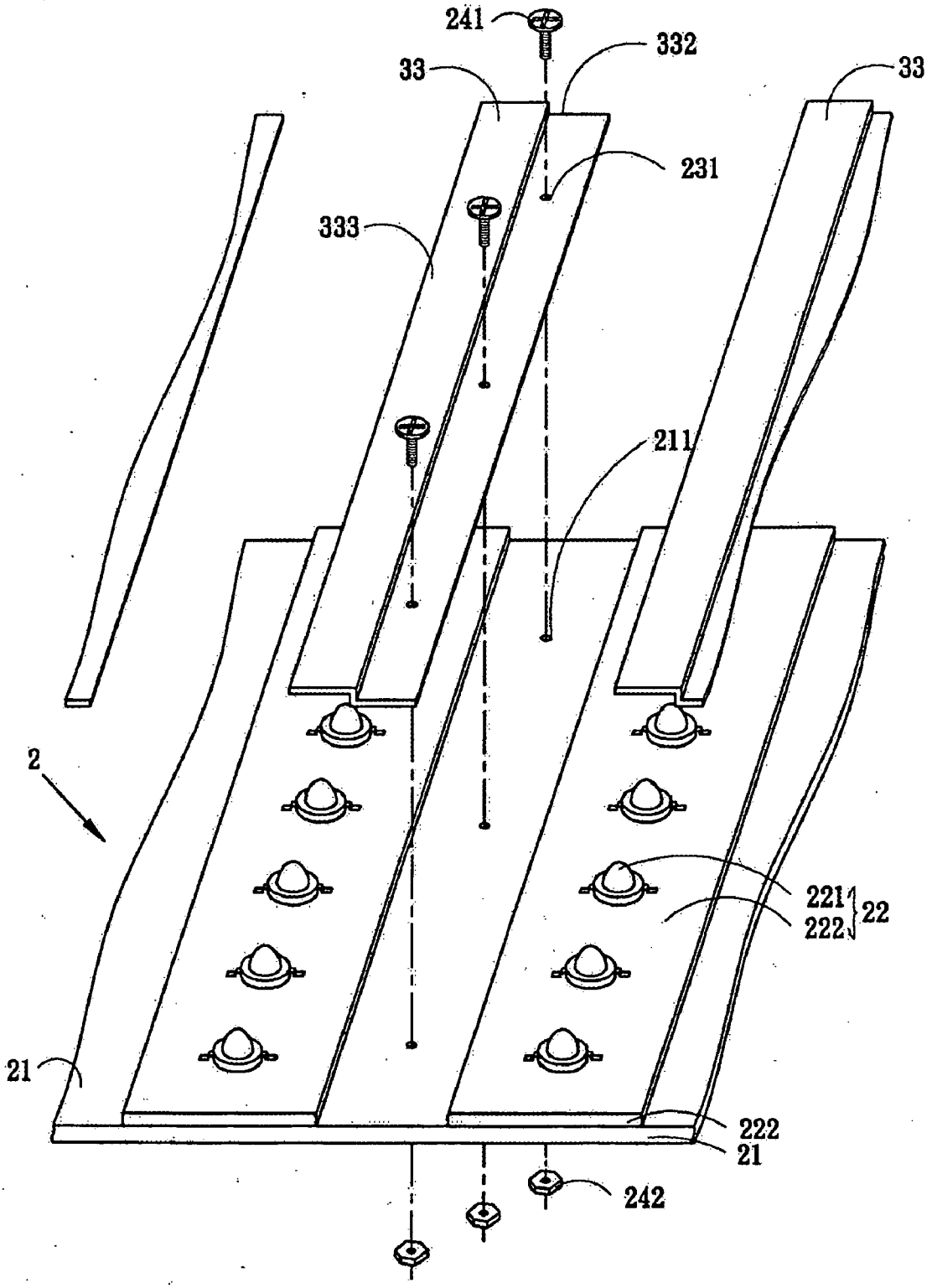

FIG. 3A

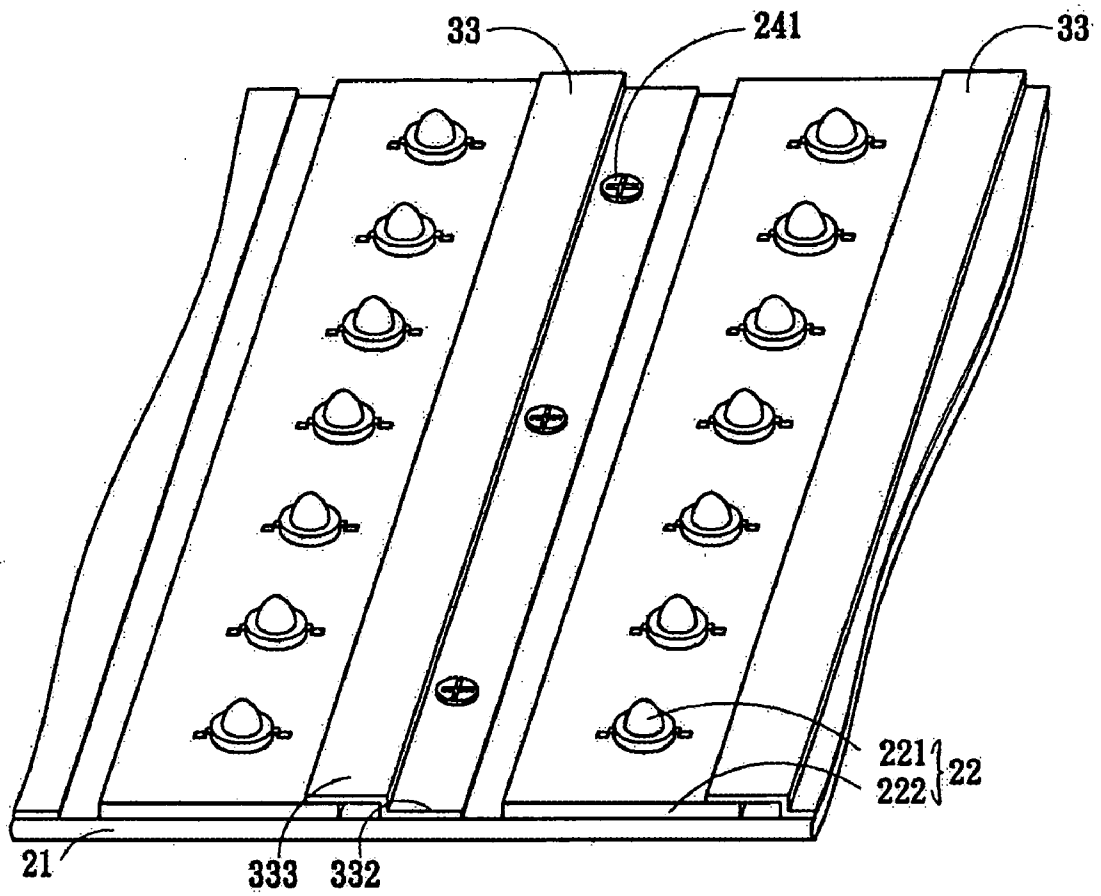

FIG. 3B

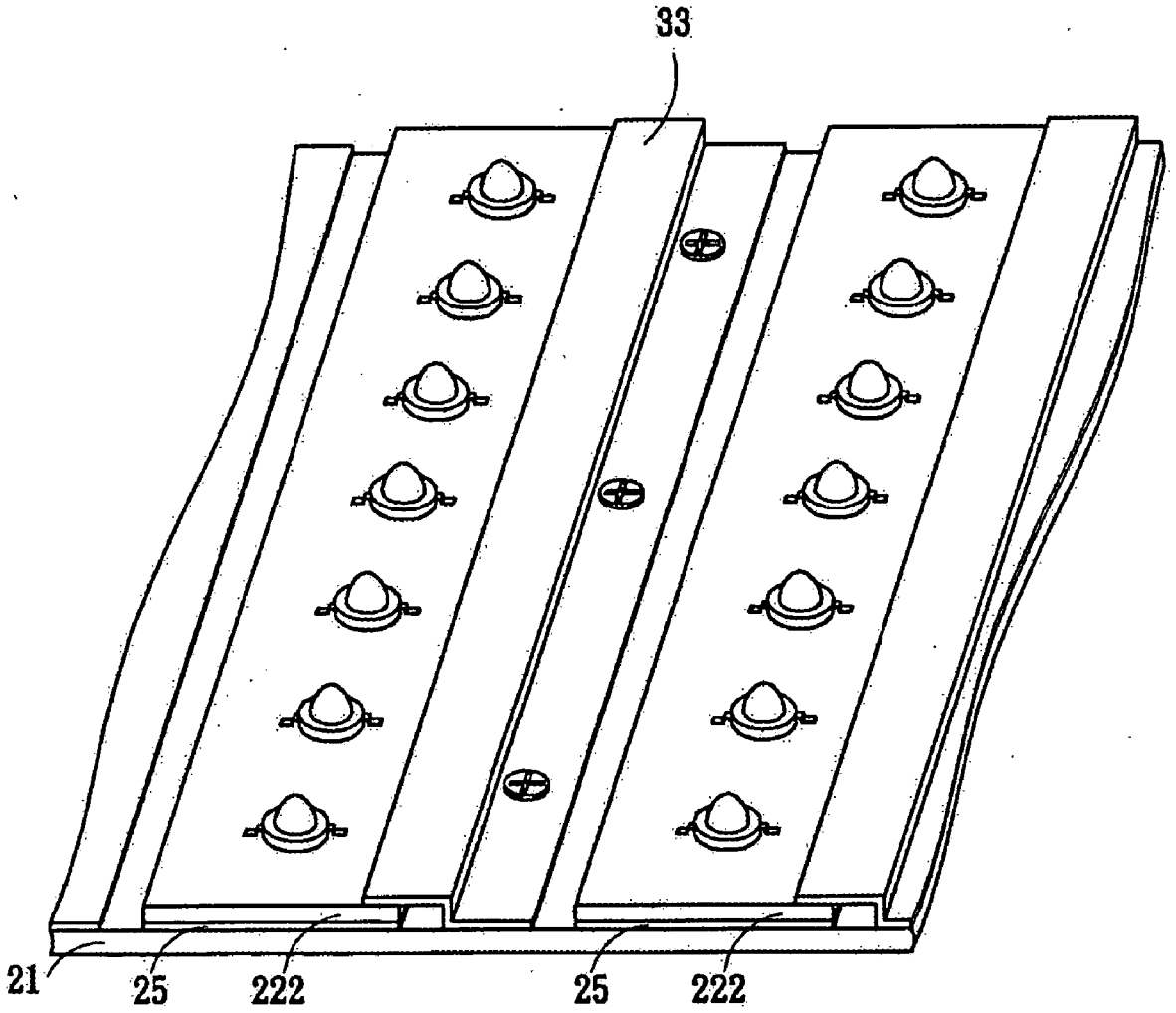

FIG. 3C

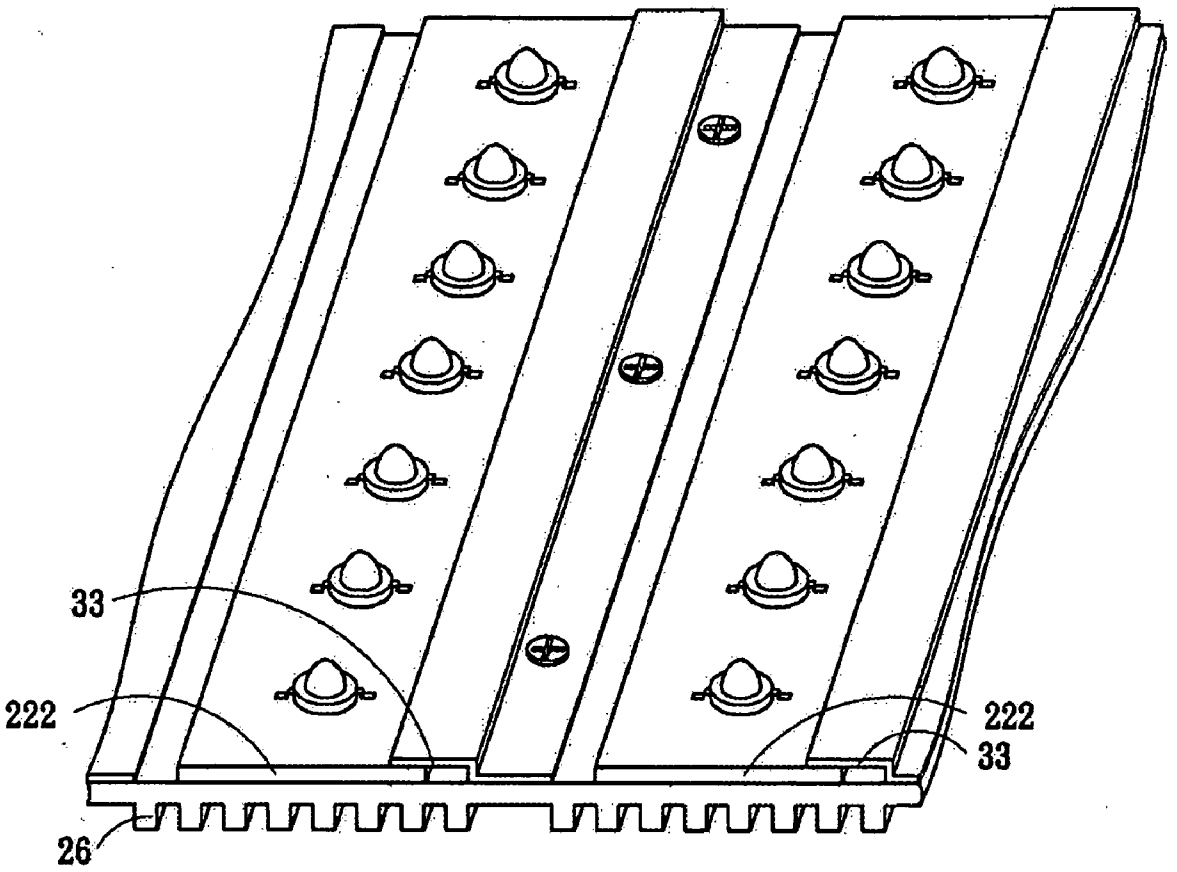

FIG. 3D

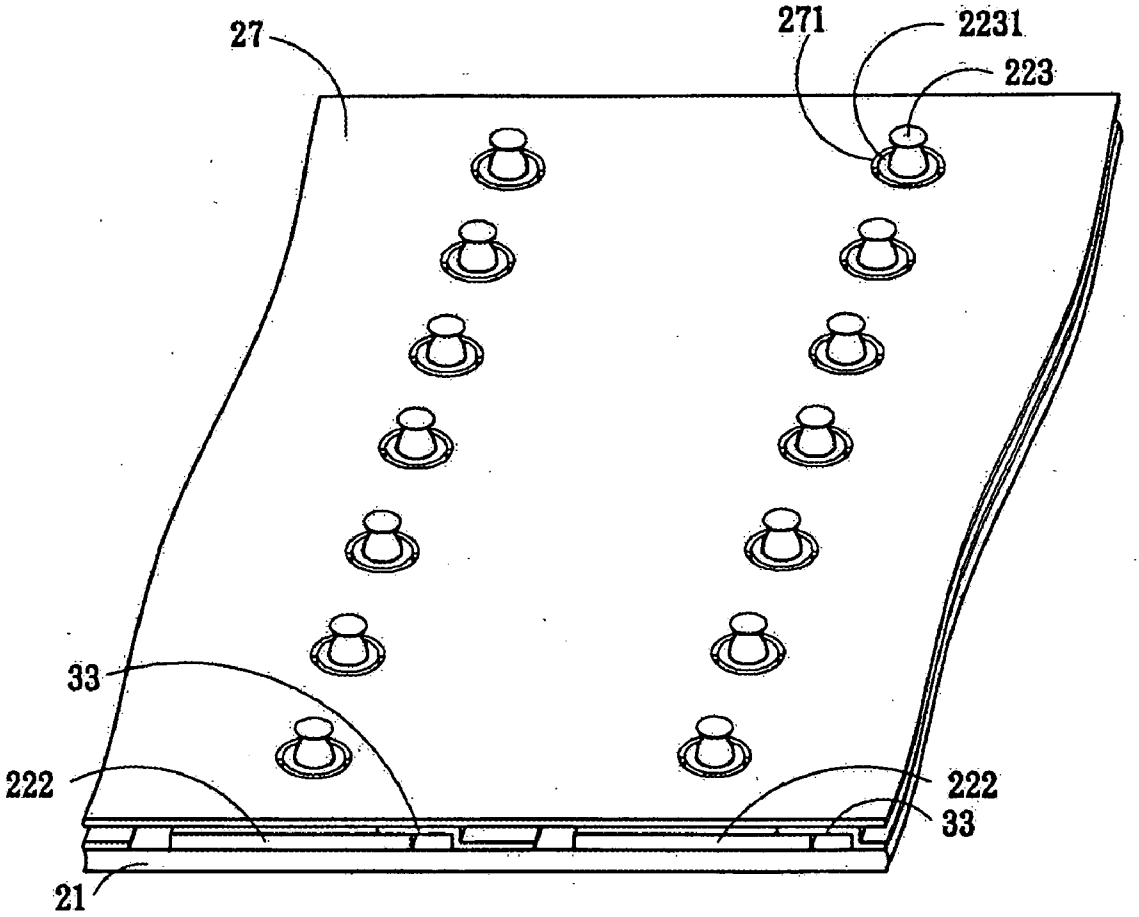

FIG. 3E

BACKLIGHT MODULE HAVING DEVICE FOR FASTENING LIGHTING UNITS

BACKGROUND OF THE INVENTION

[0001] 1. Field of the Invention

[0002] The present invention relates to a fastening device, and more particularly relates to a fastening device utilized in a backlight module to fasten the lighting units.

[0003] 2. Description of the Prior Art

[0004] Referring to **FIG. 1**, in the prior art, there is a fastening device used to fasten the lighting units **12** of the backlight module **1** within a liquid crystal display. The backlight module **1** composes a backboard **11** and a plurality of lighting units **12** arranged in equal space and in parallel on the backboard **11**. Each of the lighting units **12** includes a plurality of lighting elements **121** and an aluminum board **122** carrying the lighting elements **121**, wherein the lighting elements **121** are soldered above the aluminum board **122** and connected with the conductive trace (not shown). And, the heat generated by operating the lighting units **12** is dissipated to the backboard **11** through the aluminum board **122**.

[0005] Still referring to **FIG. 1**, the conventional method of the prior art used to fasten the lighting unit **12** is to form the corresponding holes between the aluminum board **122** and the backboard **11**, and then use bolts **141** to pass through the holes of the aluminum board **122** and the backboard **11**. Thereafter, the bolts **141** are locked together with the nuts placed at the other side of the backboard **11** and the lighting units **12** are thus fastened to the backboard **11**.

[0006] Since the material of the aluminum board **122** is not hard enough such that it is inevitable to have some voids between the aluminum board **122** and the backboard **11** to block the thermal dissipation. Therefore, in order to let the aluminum board **122** and the backboard **11** have the effect of sticking tightly, in the prior art, the solution is using lots of bolts **141** and nuts. However, it increases the complexity of the backlight module, the time of the assembling, and the cost of the producing during the fabricating.

SUMMARY OF THE INVENTION

[0007] According to the drawbacks described above, the conventional method of fastening the lighting units in the backlight module suffers complexity in assembling and high cost of manufacturing, and therefore, the purpose of the present invention is to provide a fastening device utilized in a backlight module to fasten the lighting units. An object of the present invention is to firmly fasten the lighting units unto the backboard of the backlight module so that the assembling is simplified and the required amount of the nuts and bolts is greatly reduced.

[0008] According to the object described above, the present invention discloses a fastening device utilized in a backlight module to fasten the lighting units and the resultant backlight module. A rigid board partially laps over the adjacent lighting unit or units. The rigid board and the backboard have holes respectively such that bolts are passed through the holes and locked on nuts. Accordingly the rigid board exerts a compressing strength to fasten the adjacent lighting unit or units onto the backboard. In addition to the simplification of the assembling and the decrease of the amount of the nuts and bolts required, the efficiency of thermal dissipation between the lighting units and the backboard is further improved.

BRIEF DESCRIPTION OF THE DRAWINGS

[0009] The accompany drawings incorporated in and forming a part of the specification illustrate several aspects of the present invention, and together with the description serve to explain the principles of the invention. In the drawings:

[0010] **FIG. 1** is a perspective view illustrating the backlight module by using bolts and nuts to fasten the lighting units in the prior art;

[0011] **FIGS. 2A-2B** are perspective views illustrating the lighting units within the backlight module fastened by the rigid metal board according to one embodiment of the present invention;

[0012] **FIG. 2C** is a perspective view illustrating a thermal conductive pad inserted between the metal board and the backboard according to another embodiment of the present invention;

[0013] **FIG. 2D** is a perspective view illustrating a heat sink utilized in the backlight module according to a further embodiment of the present invention;

[0014] **FIG. 2E** is a perspective view illustrating a reflective board configured on the lighting unit and the rigid metal board according to a further embodiment of the present invention; and

[0015] **FIGS. 3A** to **3**E illustrate other embodiments of the present invention, which are similar to those of **FIGS. 2A-2E** except for a modified rigid metal board.

DESCRIPTION OF THE PREFERRED EMBODIMENT

[0016] The following is the detailed description of the present invention, which describes the backlight module and the lighting units, but the detailed structure composition and the operating theory are not discussed. The portions relating to the conventional techniques are briefly described, and the parts of the drawings are not proportionally drafted. While embodiments are discussed, it is not intended to limit the scope of the present invention. Except expressly restricting the amount of the components, it is appreciated that the quantity of the disclosed components may be greater than that disclosed.

[0017] One of the preferred embodiments of the present invention discloses a backlight module in which the lighting units are fastened. First referring to **FIG. 2A**, a backlight module **2** is composed of a backboard **21** and a plurality of lighting units **22** arranged in equal space and in parallel to one another on the backboard **21**. Each lighting unit **22** comprises a plurality of lighting elements **221** and a metal board **222** carrying the lighting elements **221**. The lighting element **221** can be a conventional lighting device such as a light emitting diode (LED) soldered on the metal board **222**. On the metal board **222** is the conductive trace (not shown). The boards **222** in general can be metal boards, such as aluminum boards, or printed circuit boards (PCBs) having good thermal conductivity. Therefore, the heat generated

from the lighting element **221** could be effectively dissipated to the backboard **21** through the metal boards/PCBs **222**.

[**0018**] Still referring to **FIG. 2A**, in the embodiment of the present invention, the lighting units **22** are fastened by using a rigid metal board **23** and fasteners (**241**, **242**), where holes **211** and **231** are correspondingly formed in the backboard **21** and the rigid metal board **23**, respectively. The rigid metal board **23** can be a tinned steel board or a stainless steel board, and has a raised portion along its center to face towards the backboard **21**. The opposite of the raised portion is a concave side **232** facing upwards, which is in a direction parallel with the metal board **222**. Beside, the fasteners mentioned above can be bolts **241** and nuts **242**.

[**0019**] Now referring to **FIG. 2B**, when the rigid metal board **23** is moved and configured between two adjacent metal boards **222**, the two sides of the rigid metal board **23** with good rigidity lap over the adjacent portions of the metal boards **222**. And, when the bolts **241** are passed through the holes **231** of the concave portion **232** and the holes **211** of the backboard **21**, and locked together with nuts **242** (not shown in the figure), the rigid metal board **23** can be fastened on the backboard **21**. And, the strength of the compressing provided by the rigid metal board **23** can fasten the adjacent boards **222** on the backboard **21**. In this embodiment, the bolts **241** are passed through the holes **211** and **231** and locked in the nuts **242**. But based on other embodiments of the present invention, however, the holes **211** of the backboard **21** can be replaced by threaded holes, and the bolts replaced by screws. At the time, the screws are passed through the threaded holes and locked directly to the backboard **21**. Accordingly, the lighting units **22** are thus fastened in the backlight module **2** and the heat generated during operating the lighting elements **221** can be dissipated from the metal board **222** to the rigid metal board **23**, and ultimately to the backboard **21**, thereby enhancing the efficiency of the thermal dissipation and also reducing the needed amount of bolts/screws and nuts.

[**0020**] In order to further reduce the voids between the metal board **222** and the backboard **21**, based on other embodiments of the present invention as referring to **FIG. 2C**, it is configured a thermally conductive pad **25** between the metal board **222** and the backboard **21** to increase the contact area to enhance the efficiency of the thermal dissipation. And the thermal pad **25** can improve the tolerance between the metal board **222** and the backboard **21** during producing the materials.

[**0021**] Instead of using the thermal pad **25**, the efficiency of thermal dissipation of the backlight module **2** according to the embodiment of the present invention can also be improved by adding a heat sink **26** or replacing the backboard **21** by the heat sink **26** as shown in **FIG. 2D**.

[**0022**] According to another embodiment of the present invention, as shown in **FIG. 2E**, in which side-emitting lighting elements **223** are used as the light source, a reflective board **27** is required within the lighting unit. The reflective board **27** has holes **271** with dimension larger than that of the side-emitting lighting elements **223**, such that the side-emitting lighting elements **223** could protrude from the holes **271**. The reflective board **27** covers the metal boards **222**, which are fastened by the rigid metal board **23**, and accordingly, the side-emitting lighting elements **223** generate uniform light out of the backlight module.

[**0023**] **FIGS. 3A** to **3**E illustrate other embodiments of the present invention, and will be described with respect to the embodiments of **FIGS. 2A** to **2**E, respectively. The composing elements in **FIGS. 3A** to **3**E that are the same as corresponding ones in **FIGS. 2A** to **2**E are labeled with the same reference numerals, and will be only briefly discussed or even passed over. The elements that are modified, however, are labeled with different reference numerals, and will be discussed as follows.

[**0024**] **FIGS. 3A-3B** illustrate a backlight module **2** similar to that of **FIGS. 2A-2B** except that the rigid metal board **33** mainly includes two portions arranged in a step configuration. Specifically, the first portion **332** is recognized as the bottom step, and the second portion **333** as the top step. In assembling, when the bolts **241** are passed through the holes **231** of the bottom portion **332** and the holes **211** of the backboard **21**, and locked together with nuts **242**, the rigid metal board **33** can be fastened on the backboard **21**. And, the strength of the compressing provided by the rigid metal board **33**, especially the top portion **333**, can fasten the adjacent boards **222** on the backboard **21**.

[**0025**] **FIG. 3C** illustrates a backlight module similar to that of **FIG. 2C** except that the rigid metal board **33** mainly includes two portions arranged in a step configuration as described in the previous paragraph. Referring to **FIG. 3C**, a thermally conductive pad **25** is configured between the metal board **222** and the backboard **21** to increase the contact area to enhance the efficiency of the thermal dissipation.

[**0026**] **FIG. 3D** illustrates a backlight module similar to that of **FIG. 2D** except that the rigid metal board **33** mainly includes two portions arranged in a step configuration as described in the previous paragraphs. The efficiency of thermal dissipation of the backlight module according to this embodiment can be improved by adding a heat sink **26** or replacing the backboard **21** by the heat sink **26**.

[**0027**] **FIG. 3E** illustrates a backlight module similar to that of **FIG. 2E** except that the rigid metal board **33** mainly includes two portions arranged in a step configuration as described in the previous paragraphs. In this embodiment, the reflective board **27** covers the metal boards **222**, which are fastened by the rigid metal board **33**, and accordingly, the side-emitting lighting elements **223** generate uniform light out of the backlight module.

[**0028**] The foregoing description is not intended to be exhaustive or to limit the invention to the precise forms disclosed. Obvious modifications or variations are possible in light of the above teachings. In this regard, the embodiment or embodiments discussed were chosen and described to provide the best illustration of the principles of the invention and its practical application to thereby enable one of ordinary skill in the art to utilize the invention in various embodiments and with various modifications as are suited to the particular use contemplated. All such modifications and variations are within the scope of the invention as determined by the appended claims when interpreted in accordance with the breadth to which they are fairly and legally entitled.

What is claimed is:

1. A backlight module, comprising:

a backboard;

a plurality of lighting units disposed on the backboard; and

at least one rigid board, disposed between two adjacent lighting units, having two sides lapping over the two adjacent lighting units, respectively.

2. The backlight module of claim 1, wherein each of said lighting units comprises a plurality of lighting elements, and a carrying board for carrying said plurality of lighting elements.

3. The backlight module of claim 2, wherein said rigid board partially laps over the carrying board.

4. The backlight module of claim 1, wherein said rigid board is a tinned steel board.

5. The backlight module of claim 1, wherein said rigid board is a stainless steel board.

6. The backlight module of claim 1, further comprising a fastener configured to fasten the rigid board on the backboard.

7. The backlight module of claim 6, wherein said rigid board comprises a concave portion with a bottom of the concave portion attached to the backboard.

8. The backlight module of claim 7, wherein said rigid board and said backboard have a first hole and a second hole, respectively, and wherein the first hole is positioned on the concave portion, and the second hole is positioned corresponding to the first hole.

9. The backlight module of claim 8, wherein said fastener comprises a screw, and the second hole is a threaded hole.

10. The backlight module of claim 8, wherein said fastener comprises a bolt and a nut, said bolt being passed through the first hole and the second hole and locked on the nut, thereby fastening the rigid board on the backboard.

11. The backlight module of claim 2, further comprising a thermal conductive pad located between the carrying board and the backboard.

12. The backlight module of claim 2, further comprising a reflective board covering the rigid board.

13. The backlight module of claim 12, wherein said reflective board has a hole such that the lighting element protrudes from the hole.

14. The backlight module of claim 1, wherein said backboard comprises a heat dissipating portion.

15. A backlight module, comprising:

a backboard;

a plurality of lighting units disposed on the backboard; and

at least one rigid board, disposed adjacent the lighting unit, having at least one side lapping over the lighting unit.

16. The backlight module of claim 15, wherein each of said lighting units comprises a plurality of lighting elements, and a carrying board for carrying said plurality of lighting elements.

17. The backlight module of claim 15, wherein said rigid board comprises a first portion and a second portion connected to the first portion, said first portion being attached to the backboard.

18. The backlight module of claim 16, further comprising a thermal conductive pad located between the carrying board and the backboard.

19. The backlight module of claim 16, further comprising a reflective board covering the rigid board, wherein said reflective board has a hole such that the lighting element protrudes from the hole.

20. The backlight module of claim 15, wherein said backboard comprises a heat dissipating portion.

* * * * *