US009127545B2

(12) **United States Patent**
Kajaria et al.

(10) **Patent No.: US 9,127,545 B2**
(45) **Date of Patent: Sep. 8, 2015**

(54) **DELIVERY SYSTEM FOR FRACTURE APPLICATIONS**

(71) Applicant: **GE Oil & Gas Pressure Control LP**, Houston, TX (US)

(72) Inventors: **Saurabh Kajaria**, Houston, TX (US); **Khang Nguyen**, Houston, TX (US)

(73) Assignee: **GE Oil & Gas Pressure Control LP**, Houston, TX (US)

(*) Notice: Subject to any disclaimer, the term of this patent is extended or adjusted under 35 U.S.C. 154(b) by 215 days.

(21) Appl. No.: **13/870,622**

(22) Filed: **Apr. 25, 2013**

(65) **Prior Publication Data**

US 2013/0284455 A1 Oct. 31, 2013

Related U.S. Application Data

(60) Provisional application No. 61/638,818, filed on Apr. 26, 2012.

(51) **Int. Cl.**

E21B 43/26	(2006.01)
E21B 33/03	(2006.01)
F16L 23/08	(2006.01)

(52) **U.S. Cl.**

CPC ***E21B 43/26*** (2013.01); ***E21B 33/03*** (2013.01); ***F16L 23/08*** (2013.01)

(58) **Field of Classification Search**

CPC E21B 43/12; E21B 43/26

See application file for complete search history.

(56) **References Cited**

U.S. PATENT DOCUMENTS

4,218,080	A	8/1980	Kendrick
4,448,535	A	5/1984	West
5,799,734	A	9/1998	Norman et al.
6,306,800	B1	10/2001	Samuel et al.
6,435,277	B1	8/2002	Qu et al.
6,698,915	B2	3/2004	Dearing et al.
7,073,592	B2	7/2006	Polsky et al.
7,478,673	B2	1/2009	Boyd
7,841,394	B2	11/2010	McNeel et al.
7,921,914	B2	4/2011	Bruins et al.
8,146,665	B2	4/2012	Neal
8,261,841	B2	9/2012	Bailey et al.
2008/0029267	A1	2/2008	Shampine et al.
2010/0032031	A1	2/2010	Neal
2010/0326663	A1	12/2010	Bobier et al.
2011/0048695	A1	3/2011	Cherewyk et al.
2011/0259584	A1	10/2011	Broussard, Ii
2011/0272158	A1	11/2011	Neal
2012/0085541	A1	4/2012	Love et al.

(Continued)

OTHER PUBLICATIONS

International Search Report and Written Opinion issued in connection with corresponding PCT Application No. PCT/US2013/038178 dated Sep. 29, 2014.

(Continued)

Primary Examiner — William P Neuder

(74) *Attorney, Agent, or Firm* — Bracewell & Giuliani LLP

(57) **ABSTRACT**

Described herein is a modular, adjustable system for distributing fluids to one or more wellbores. The system is readily configured and assembled at a well site, and allows for one portion of the system to be isolated for service or repair while the remainder of the system continues to operate. The system includes a plurality of pump skids having both a distribution junction in fluid communication with inlets to of plurality of pump trucks and an exit junction in fluid communication with outlets of the plurality of pump trucks.

18 Claims, 8 Drawing Sheets

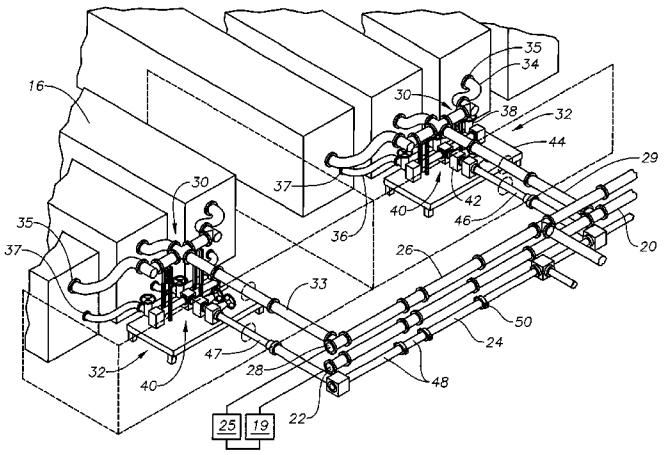

(56) **References Cited**

U.S. PATENT DOCUMENTS

2012/0181013	A1*	7/2012	Kajaria et al.	166/79.1
2012/0181015	A1	7/2012	Kajaria et al.	
2012/0181016	A1	7/2012	Kajaria et al.	
2012/0181030	A1	7/2012	Kajaria et al.	
2012/0181046	A1*	7/2012	Kajaria et al.	166/380
2012/0255734	A1*	10/2012	Coli et al.	166/305.1

OTHER PUBLICATIONS

API 6A Mud Valves (Complete Solutions for Industrial Valves)—Neway Valve, Cat. No. E-MV-2004, pp. 1-4.

* cited by examiner

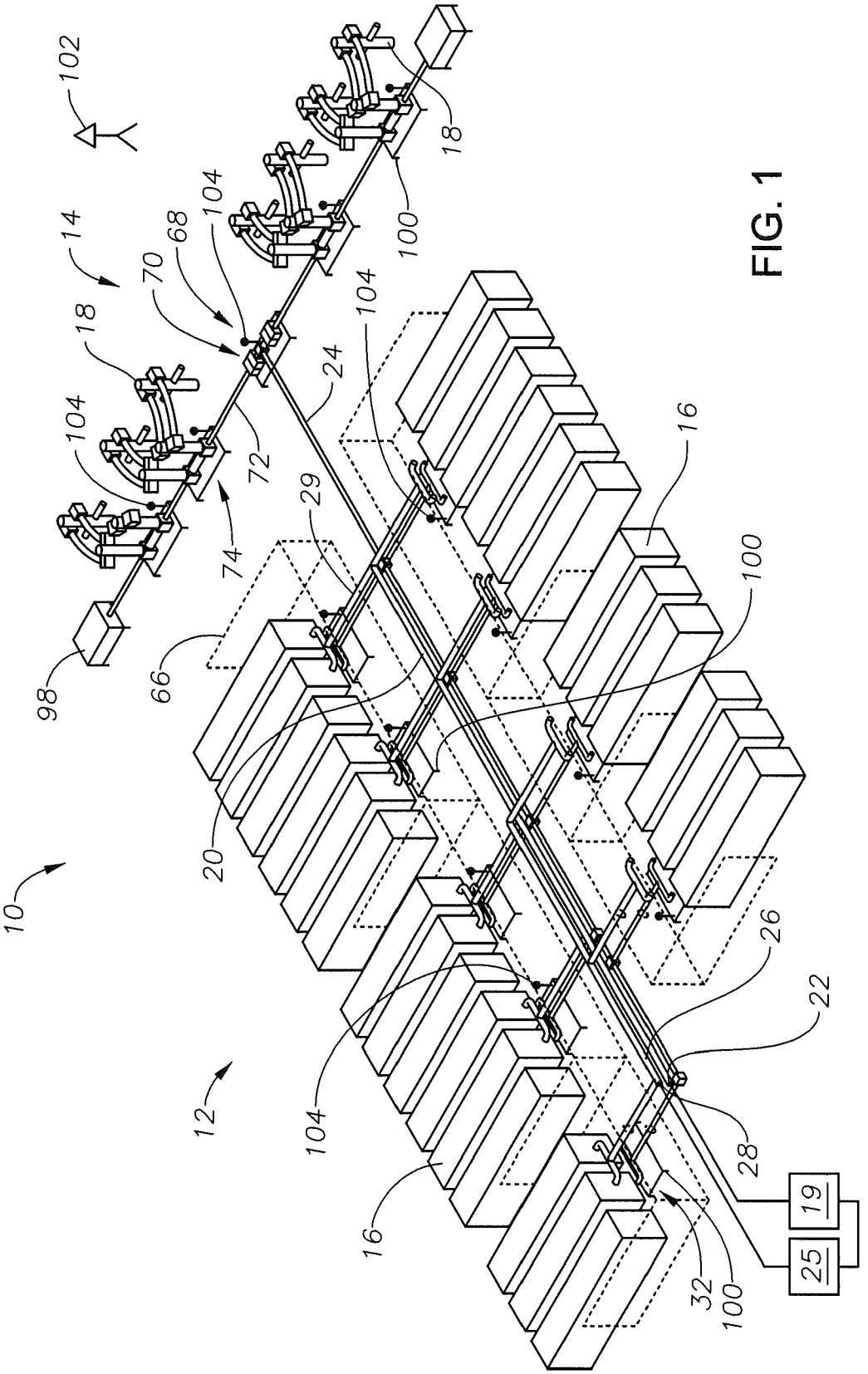
102
14
18
70
68
104
100
18
104
72
24
104
74
29
16
98
66
100
20
10
26
22
12
104
28
16
19
25
32
100

FIG. 1

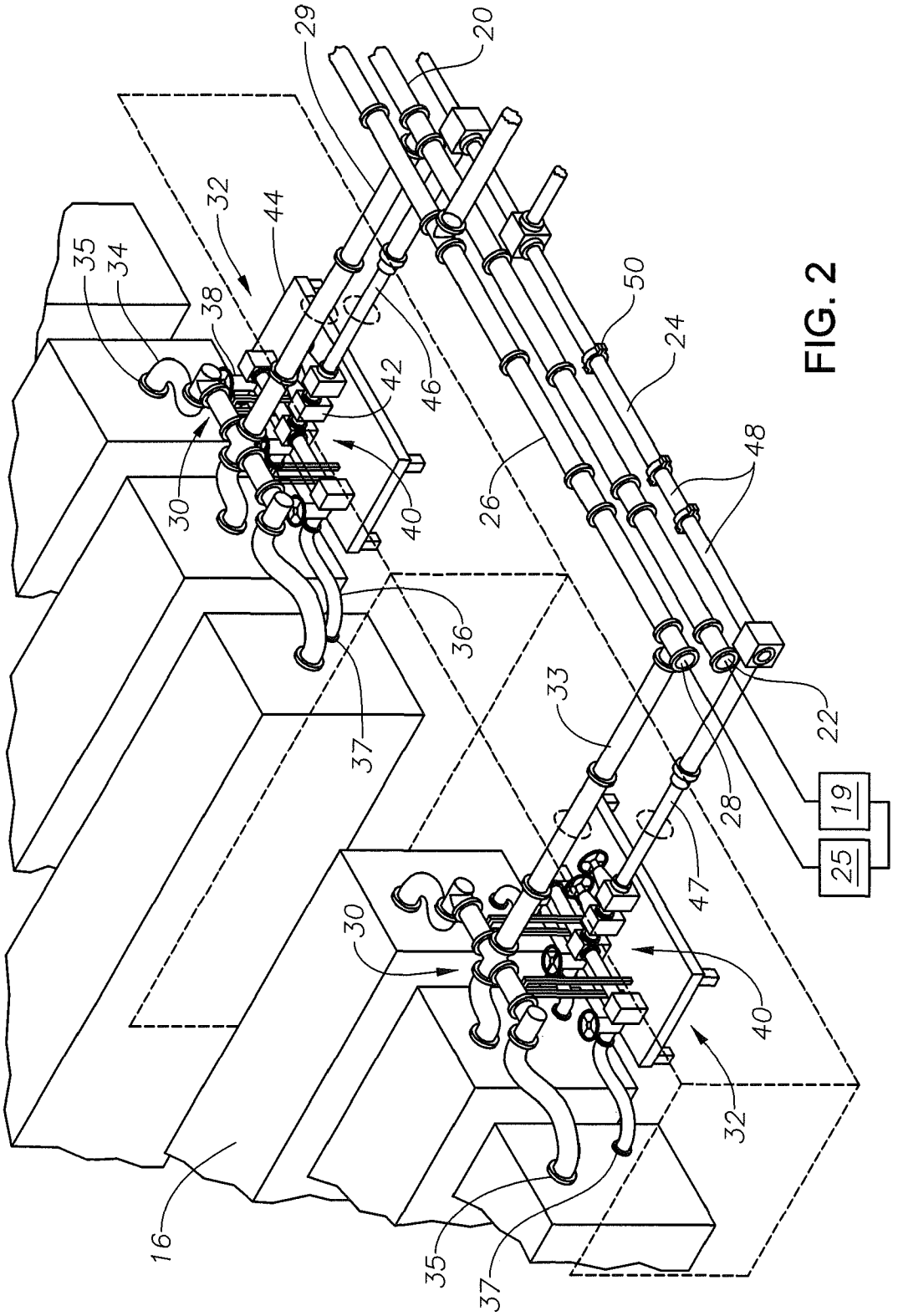
29
20
32
44
35
34
38
42
46
50
24
30
40
26
48
36
37
33
22
19
25
28
47
30
40
32
16
35
37

FIG. 2

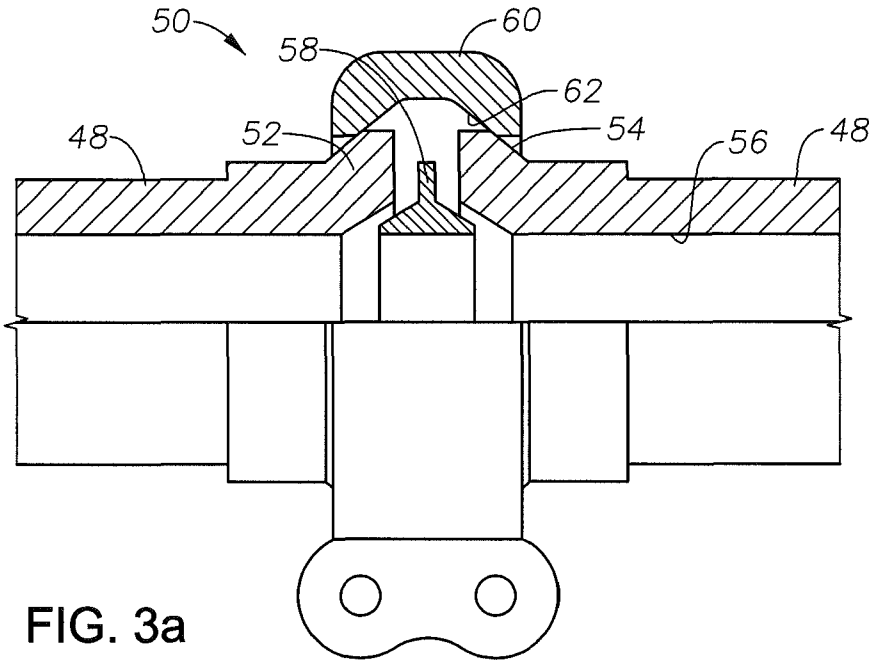

FIG. 3a

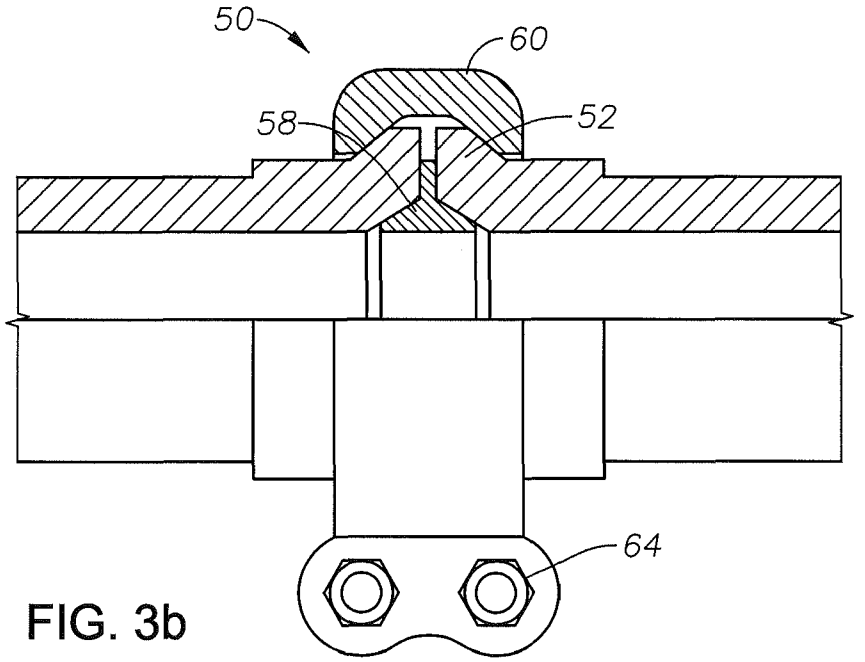

FIG. 3b

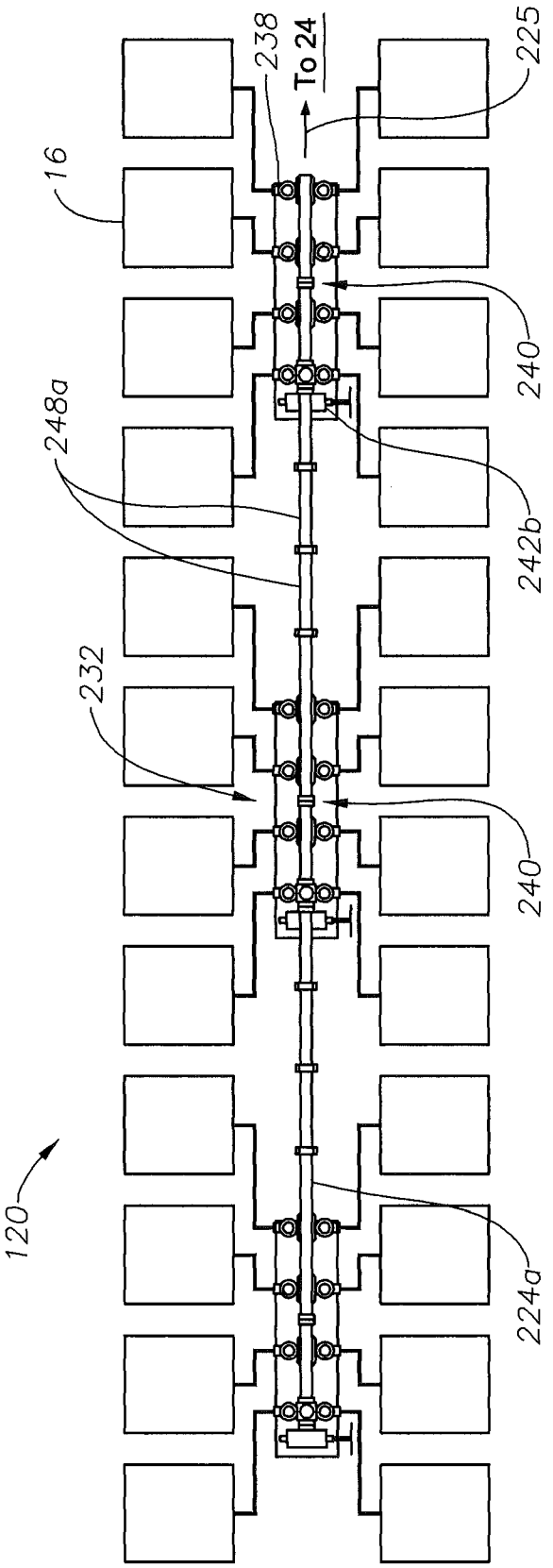

FIG. 4

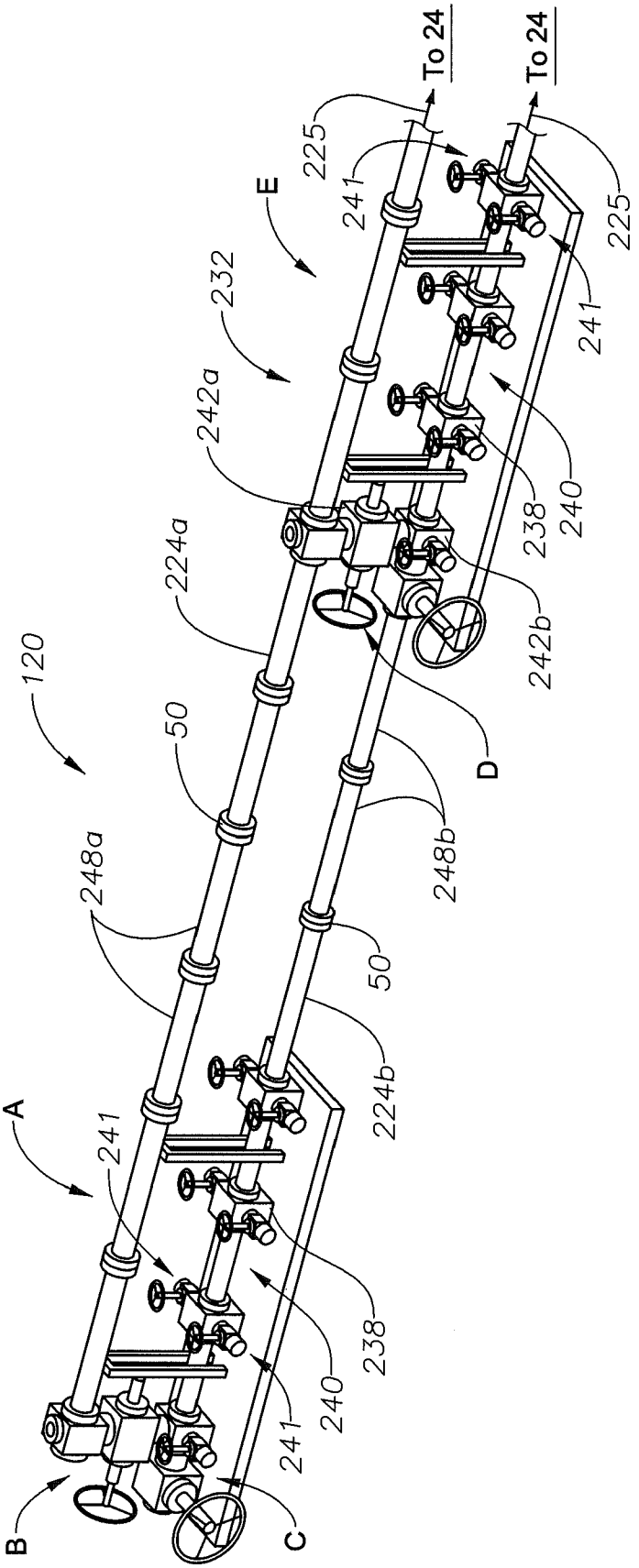
To 24
To 24
225
225
241
241
E
232
242a
240
238
224a
242b
120
50
D
248a
248b
50
224b
A
241
238
240
241
B
C

FIG. 5

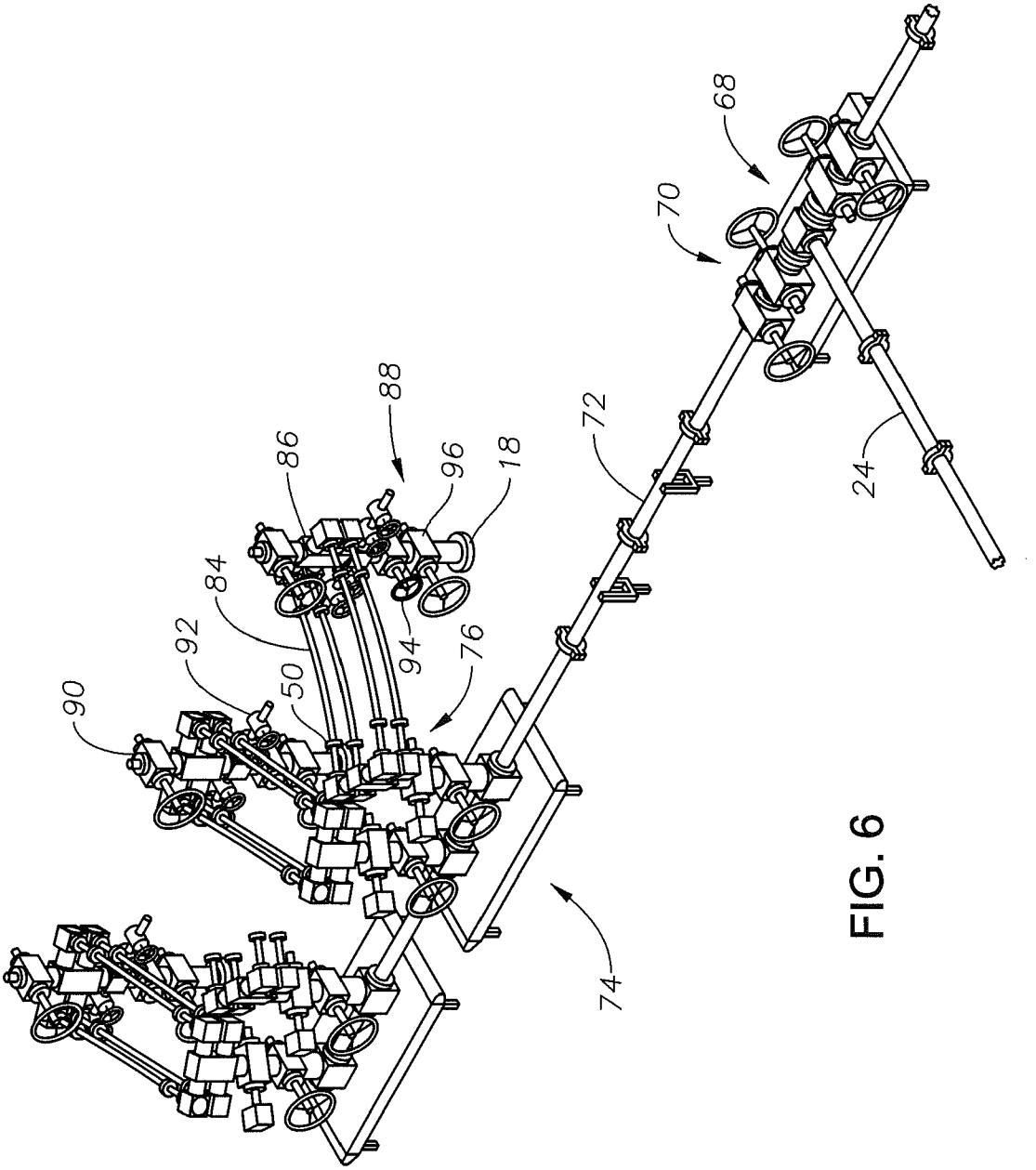

FIG. 6

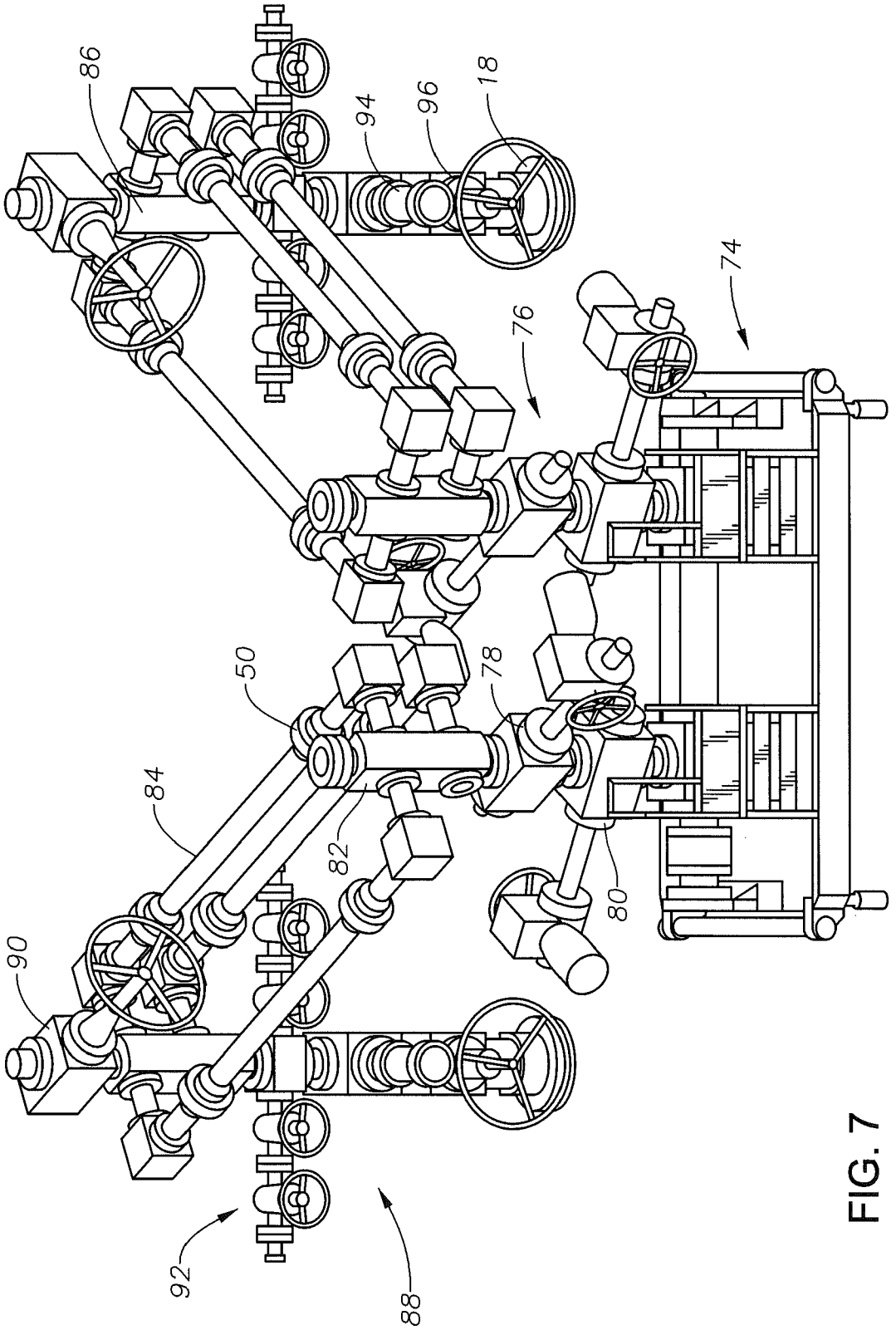

FIG. 7

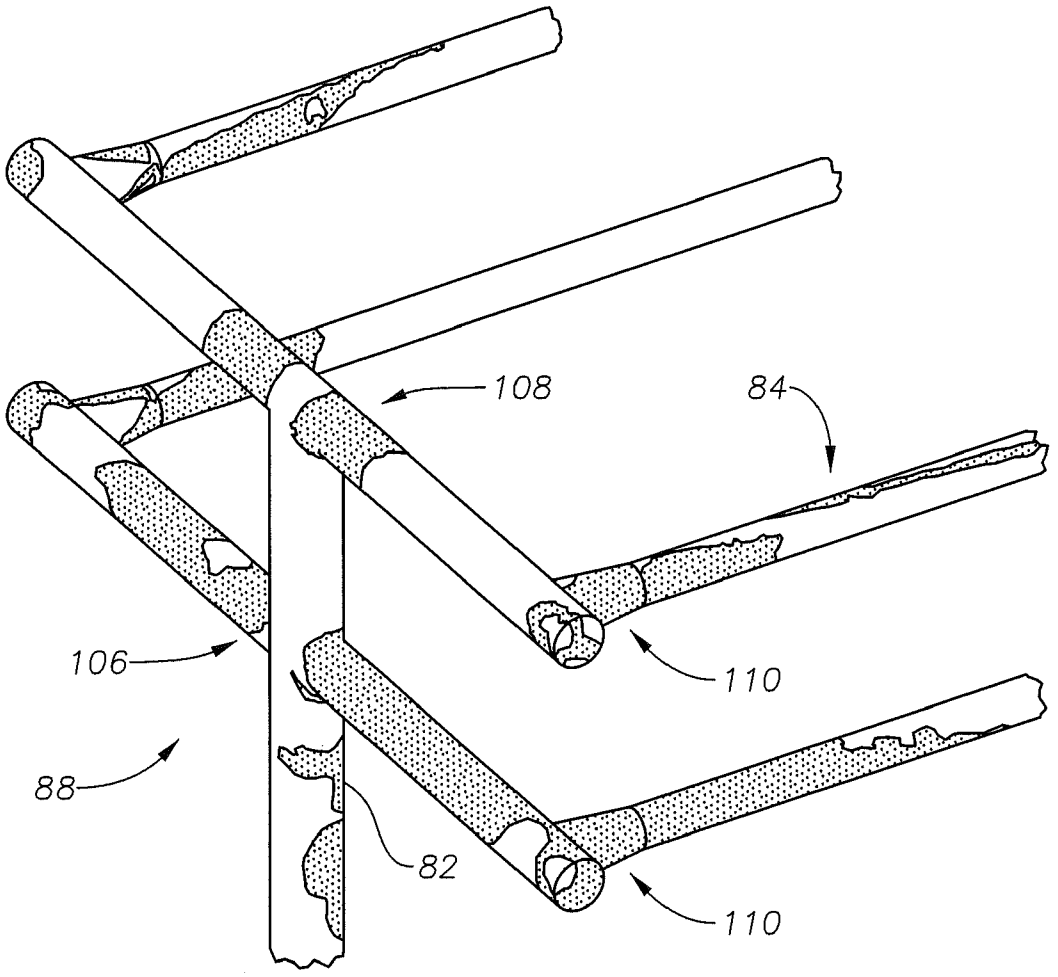

FIG. 8

DELIVERY SYSTEM FOR FRACTURE APPLICATIONS

CROSS-REFERENCE TO RELATED APPLICATIONS

This application claims priority to and the benefit of co-pending U.S. Provisional Application 61/638,818, filed Apr. 26, 2012, the full disclosure of which is hereby incorporated by reference herein for all purposes.

BACKGROUND OF THE INVENTION

1. Field of the Invention

Embodiments of the present invention relate in general to fluid delivery systems and in particular to manifolds for delivering fluids under pressure.

2. Description of the Related Art

Often in oilfield operations, fluids are pumped into a wellbore extending through a geologic formation. Hydraulic fracturing is an example of an oilfield operation in which fluids are pumped into a wellbore at a sufficient pressure to fracture the geologic formation. Fracturing the geologic formation provides a conductive path for hydrocarbons captured in the geologic formation to reach the wellbore, and thereby facilitates recovery of the hydrocarbons through the wellbore.

In general, the equipment used in hydraulic fracturing includes a tank or other source of low-pressure fracturing fluid, a slurry blender, a plurality of high-pressure, high volume fracturing pumps, and various hoses and pipelines to direct the flow of the fracturing fluid to the wellbore. The management of the number of trucks, pumps, containers, pipelines, and other equipment for a fracturing system presents significant challenges to an operator. For example, it is often necessary to interrupt operations to investigate a malfunction or to repair the equipment. Additionally, to be cost effective, once fracturing operations are complete at a first well site, the complex system of equipment must often be disassembled, relocated, and reassembled at another well site for reuse. These connections and disconnections consume a considerable amount of time and manpower.

SUMMARY OF THE INVENTION

Described herein is a modular, adjustable system for distributing fluids to one or more wellbores. The system allows for one portion of the system to be isolated for service or repair while the remainder of the system continues to operate. The system is also readily configured and assembled at a well site.

According to one aspect of the disclosure, a delivery system for delivering fluid to a wellhead includes a water pipeline having an end in fluid communication with a water supply, and a water supply branch that is in fluid communication with the water pipeline and that connects to an inlet of a water pump. A slurry pipeline has an end in fluid communication with a supply of slurry, and a slurry supply branch is in fluid communication with the slurry pipeline and connects to an inlet of a slurry pump. A high-pressure pipeline has an end in fluid communication with the wellhead. A water exit branch is in fluid communication with the high pressure pipeline and connects to an outlet of the water pump, and a slurry exit branch is in fluid communication with the high pressure pipeline and connects to an outlet of the slurry pump.

In some embodiments, the delivery system further includes a first pump skid supporting a first distribution junction and a first exit junction thereon, and the slurry supply branch connects to the inlet of the slurry pump through the first distribution junction and the slurry exit branch connects to the outlet of the slurry pump through the first exit junction. In some embodiments, the delivery system further includes a second pump skid supporting a second distribution junction and a second exit junction thereon, and the water supply branch connects to the inlet of the water pump through the second distribution junction and the water exit branch connects to the outlet of the water pump through the second exit junction. In some embodiments, the slurry supply branch connects to a plurality of slurry pumps through the first distribution junction and the slurry exit branch connects to the plurality of slurry pumps through the first exit junction.

In some embodiments, the delivery system further includes a valve fluidly coupled between the outlet of the slurry supply branch and the exit junction such that the slurry pump is selectively isolatable from the high pressure pipeline. In some embodiments, the delivery system further includes a valve unit fluidly coupled between the first exit junction and the slurry exit branch such that the plurality of slurry pumps are selectively isolatable from the high pressure pipeline.

In some embodiments, the supply of slurry is in fluid communication with the water supply. In some embodiments, the water pipeline and the slurry pipeline are in parallel with the high-pressure pipeline. In some embodiments, the delivery system further includes a frac skid adjacent the wellhead, and the frac skid includes at least one frac manifold in fluid communication with the high-pressure pipeline. In some embodiments, the first and second pump skids each include a jack operable to adjust an elevation of the respective pump skid, and in some embodiments, the delivery system further includes an elevation measurement device, and the first and second pump skids each include a leveling target thereon providing a reference for the elevation measurement device.

According to another aspect of the disclosure, a collection manifold for delivering fluid to a wellhead includes a first low-pressure pipeline comprising an end in fluid communication with a source of fluid and a high-pressure pipeline having an end in fluid communication with the wellhead. A first pump skid supports a first distribution junction and a first exit junction thereon. The first low-pressure pipeline connects to an inlet of a first pump through the first distribution junction and the high-pressure pipeline connects to an outlet of the first pump through the first exit junction. A second pump skid is disposed remotely from the first pump skid. The second pump skid supports a second distribution junction and a second exit junction thereon, and the first low-pressure pipeline connects to an inlet of a second pump through the second distribution junction and the high-pressure pipeline connects to an outlet of the second pump through the second exit junction.

In some embodiments, the high-pressure pipeline connects to a plurality of pumps through a plurality of inlets defined in the first exit junction, and the plurality of inlets are arranged on two opposing sides of the first pump skid. In some embodiments, the first and second exit junctions are fluidly coupled in series to one another. In some embodiments, the delivery system further includes a bypass high-pressure pipeline in fluid communication with the first and second exit junctions.

In some embodiments, the first low-pressure pipeline is a slurry pipeline in fluid communication with a source of slurry. In some embodiments, the collection manifold further includes a second low pressure pipeline, and the second low-pressure pipeline is a water pipeline in fluid communication with a water source and in fluid communication with the high-pressure pipeline through a third pump.

In some embodiments, the collection manifold further includes a safety blanket positioned between the first and second pump skids. In some embodiments, the high-pressure pipeline includes first and second high-pressure pipe segments coupled to one another by a hub connector having a seal ring disposed longitudinally between the first and second pipe segments and a clamping ring with two opposing members operable to urge the first and second pipe segments longitudinally toward one another in response to movement of the two opposing members toward one another in a lateral direction.

According to another aspect of the disclosure, a method of assembling a manifold for delivering fluid to a wellhead includes (i) assembling a distribution junction and an exit junction to each of a plurality of bases to form a plurality of pump skids, (ii) arranging the plurality of pump skids at a well site, (iii) fluidly coupling a first low-pressure pipeline to at least one the distribution junctions disposed on the plurality of pump skids, wherein the first low pressure pipeline extends to a fluid source, and (iv) fluidly coupling a high-pressure pipeline to each of the exit junctions disposed on the plurality of pump skids, wherein the high-pressure pipeline extends to the wellhead.

BRIEF DESCRIPTION OF THE DRAWINGS

So that the manner in which the features and benefits of the invention, as well as others which will become apparent, may be understood in more detail, a more particular description of the invention briefly summarized above may be had by reference to the embodiments thereof which are illustrated in the appended drawings, which form a part of this specification. It is also to be noted, however, that the drawings illustrate only various embodiments of the invention and are therefore not to be considered limiting of the invention's scope as it may include other effective embodiments as well.

FIG. **1** is a perspective view of a delivery system according to an embodiment of the present invention;

FIG. **2** is a perspective view of a portion of a collection manifold of the system of FIG. **1** according to an embodiment of the present invention;

FIG. **3***a* is a partial sectional view of a hub connector in the open position according to an embodiment of the present invention;

FIG. **3***b* is a sectional view of a hub connector in a closed position according to an embodiment of the present invention;

FIG. **4** is a plan view of an alternative embodiment of a collection manifold according to an embodiment of the present invention;

FIG. **5** is a perspective view of a portion the collection manifold of the system of FIG. **4** according to an embodiment of the present invention;

FIG. **6** is a perspective view of a portion of the delivery section of the delivery system according to an embodiment of the present invention;

FIG. **7** is a perspective view of a portion of the delivery section of FIG. **6** according to an embodiment of the present invention; and

FIG. **8** is a perspective view of erosion analysis results of flow lines according to an embodiment of the present invention.

DETAILED DESCRIPTION OF THE EXEMPLARY EMBODIMENTS

The present invention will now be described more fully hereinafter with reference to the accompanying drawings, which illustrate various embodiments of the invention. This invention, however, may be embodied in many different forms and should not be construed as limited to the illustrated embodiments set forth herein; rather, these embodiments are provided so that this disclosure will be thorough and complete, and will fully convey the scope of the invention to those skilled in the art.

1. Modularity and Isolation

Referring to FIG. **1**, shown in an overhead perspective view is an example of a delivery system **10** for use in delivering fluids under pressure includes a collection manifold **12** and a delivery section **14**. This delivery system **10** may be used, for example, for delivering fracturing fluids through pump trucks **16** to wellheads **18**. The fracturing fluids may be made up of sand, water and other additives, which is mixed in blenders **19** to create a low-pressure slurry. This slurry is conveyed to the pump trucks **16** by way of a slurry pipeline or first low-pressure pipeline **20**. The blenders **19** connect to first low-pressure pipeline **20** at slurry input end **22**. The pump trucks **16** pressurize the slurry and transfer it to high-pressure pipeline **24**. Instead of receiving slurry, some pump trucks **16** may instead pressurize water only. Water is provided from water source **25**. Water enters a water pipeline or second low-pressure pipeline **26** at water source end **28** and is conveyed through second low-pressure pipeline **26** to one or more of the pump trucks **16**. Water source **25** is also in fluid communication with the blenders **19** such that water from the water source **25** is supplied to the blenders **19** to create the low pressure slurry in some embodiments.

As is best seen in FIG. **2**, after entering slurry input end **22**, the slurry travels from first low-pressure pipeline **20** to truck slurry supply branch **29**. Truck slurry supply branch **29** is in fluid communication with a distribution junction **30** located on a pump skid **32**. A water supply branch **33** extending from the second low-pressure pipeline **26** is similarly in fluid communication with a distribution junction **30** located on another pump skid **32**. The distribution junction **30** directs the low-pressure slurry from the truck slurry supply branch **29** to a truck connection line **34** which provides the slurry to an inlet **35** one of the pump trucks **16**. The distribution junction **30** is in fluid communication with multiple truck connection lines **34** and divides the slurry flowing in truck slurry supply branch **29** between the truck connection lines **34**. Truck connection line **34** may be, for example, either a flexible flow line or a rigid pipeline. In some embodiments, a valve (not shown) may be situated between the truck slurry supply branch **29** and the truck connection lines **34** to selectively block or allow fluid communication between the truck slurry supply branch **29** and the truck connection line **34**.

After the slurry is pressurized within pump truck **16**, the pressurized slurry exits the pump truck **16** into truck exit line **36** through outlet **37**. Truck exit line **36** may be, for example, either a flexible flow line or a rigid pipeline. One end of truck exit line **36** is in fluid communication with one of the pump trucks **16** and the other end of truck exit line **36** is in fluid communication with a truck exit valve **38** situated on a pump skid **32**. Truck exit valve **38** may be any suitable valve capable of operating at the design criteria, including pressure, of the pressurized slurry.

From the truck exit valve **38** the pressurized slurry passes into an exit junction **40** shown located on pump skid **32**. Exit junction **40** includes a line in communication with multiple exit valves **38** and combines the pressurized slurry from one or more pump trucks **16**. Exit junction **40** directs the slurry to truck exit valve unit **42**. Truck exit valve unit **42** is in fluid communication with exit junction **40**; which may include an isolation valve, and may be a single valve or two valves in

series. Truck exit valve unit **42** is also located on pump skid **32**. The equipment included in pump skid **32** is supported by a pump skid base **44**.

Still referring to FIG. **2**, after passing through the truck exit valve unit **42**, slurry enters the slurry exit branch **46**. One end of slurry exit branch **46** is in fluid communication with truck exit valve unit **42** and the other end of slurry exit branch **46** is in fluid communication with high-pressure pipeline **24**. Slurry exit branch **46** may have a single diameter flow line, or may include segments of flow lines with varying diameters. In one embodiment, the diameter of slurry exit branch **46** is larger proximal to high-pressure pipeline **24** and is smaller distal from high-pressure pipeline **24**.

Water is similarly conveyed from pump trucks **16** to high pressure pipeline **24** through a water exit branch **47**. In some embodiments of use, both water and slurry are introduced to high pressure pipeline **24** simultaneously from slurry exit branch **46** and water exit branch **47**. In other embodiments of use, truck exit valves **38** and/or valve units **42** are appropriately actuated such that water or slurry is individually introduced into high-pressure pipeline **24**.

High-pressure pipeline **24** includes a number of pipe segments **48**. High-pressure pipe segments **48** may be connected to each other using a hub connector **50**. Turning to FIGS. **3***a*-**3***b*, each end of high-pressure pipe segments **48** have a radially outward protruding hub portion **52** with a hub outer surface **54** which is disposed at an oblique to the central bore **56** of the pipe segment **48**. An annular seal ring **58** inserts between the end surfaces of consecutive pipe segments **48**. A clamping ring **60** includes two semi-circular members that each have an inner cam surface **62** that engages outer surface **54** of the hub portions **52** when the semicircular members of clamping ring **60** are moved toward one another in a lateral direction, causing the ends of the pipe segments **48** to move longitudinally towards each other and come into sealing engagement with opposite sides of seal ring **58**, as shown in FIG. **3***b*. Bolts **64** secure both of the semi-circular members of the clamping ring **60** together at each side. Bolts **64** are perpendicular to the central bore **56** of the pipe segment **48**.

Although other connection means, such as bolted flanges or hammer unions may be used, applicants have recognized a need to employ an alternative connection means that is less time consuming and has a low risk of causing injury to personnel during installation. In addition, there may be a significant amount of bending moments as well as other stresses, strains, and resulting vibrations acting on the high-pressure pipeline **24**. Such forces lead to wear and tear on the connection means, often causing failure of the connection means. For example, when a connection means with bolts that are parallel to the central bore **56** of the pipe segment **48** is used, the bolts may stretch under the applied bending moments and vibrational forces. Such stretching may result in leakage at the connection means and require the repair or replacement of the connection means. Not only is this costly and time consuming, but it could create a hazardous situation.

In addition, connection means such as bolted flanges or hammer unions do not generally accommodate the same degree of misalignment of the pipe ends as the hub connectors **50**. Thus, connection means such as bolted flanges or hammer unions make it time consuming to make up each of the connections between pipe segments **48** as there would be no margin of error allowable when mating the pipe segments **48**. Also, applicants have recognized that it would be desirable to use a connection means that could handle misalignment if high-pressure pipeline **24** was to become out of alignment during operations. The hub connector **50** can manage misalignment and would therefore decrease the time required to connect pipe segments **48** and can handle some degree of misalignment of high-pressure pipeline **24** during operations. Not only can hub connector **50** manage misalignment, it also has a better bending capability than traditional flanged connections, reducing the risk of failure from applied loads.

Returning to FIG. **1**, the delivery system **10** includes a plurality of pump skids **32**, each with one or more pump trucks **16** connected thereto. The number and layout of the pump trucks **16** and pump skids **32** can vary depending on the needs of a particular operation. Pump skids **32** may be standardized and pre-fabricated before delivery to the installation site. This will improve the efficiency, cost and time of installation as well as reduce manufacturing expenses. Standardization of the pump skids **32** will also allow for the pump skids **32** to be more easily utilized at a subsequent site.

Pump trucks **16** in the embodiment of FIG. **1** are connected in parallel, allowing for one pump truck **16** to be isolated from the delivery system **10**, or one pump skid **32** to be isolated from the delivery system **10**. A pump truck **16** or pump skid **32** may be isolated for service or repair while the other pump trucks **16** and pump skids **32** continue to operate. This allows for services and repairs to be performed as needed or desired without having to shut down other components or the entire operation. Looking again at FIG. **2**, when isolating a single pump truck **16** from the rest of the delivery system **10**, truck exit valve **38** would be moved to a closed position. To isolate a pump skid **32** from the system, one or more of the valves in truck exit valve unit **42** would be moved to a closed position. The opening and closing of these valves can be either manual or by automated actuation. A catwalk ramp (not shown) can be constructed along the length of the pump skid **32** or the entire collection manifold **12** to ease access for maintenance or repair or for other access requirements.

Explosion proof safety blankets **66** may be positioned to isolate one pump skid **32** from another and thereby create a safe work area. Traditional concrete or wood constructed barriers are cumbersome and not always capable of being re-used. Safety blankets **66** act as a pressure shield and are portable, light weight, weather resistant and re-usable. Not only can safety blankets **66** be re-used at a different operation, they may also be used for other purposes at the same operation. For example, if no maintenance or repairs are being conducted, the safety blankets **66** can be used as weather shields to protect the equipment in proximity to the wellhead **18**.

Turning now to FIGS. **4** and **5**, an alternative embodiment of a collection manifold **120** includes one or more pump skids **232**. As illustrated for clarity, the input lines extending between the slurry supply or blenders **19** (FIG. **1**) and the pump trucks **16** and the input lines extending between the water source **25** (FIG. **1**) and the pump trucks **16** are not depicted in FIGS. **4** and **5**. However, as one skilled in the art will appreciate, in some embodiments, the collection manifold **120** includes these input lines.

Each of the pump skids **232** is a modular unit that is connected in series and parallel. An exit junction **240** having inlets **241** is provided on each of the pump skids **232**. The inlets **241** are arranged on two opposing sides of the pump skids **232** such that pump trucks **16** can be connected to either side of the pump skid **232**. The number and layout of the pump trucks **16** and pump skids **232** can vary depending on the needs of a particular operation. Pump skids **232** may be standardized and pre-fabricated before delivery to the installation site. This will improve the efficiency, cost and time, of installation as well as reduced manufacturing expenses. Standardization of the pump skids **232** will also allow for the pump skids **232** to be more easily utilized at a subsequent site.

The arrangement of pump skids **232** can be linear, as shown in FIG. **4**, or they may be situated at an angle as required to fit the pad layout. As can be seen in FIG. **4** and FIG. **5**, each pump skid **232** interfaces with the pump truck **16** through a truck exit valve **238** that allows removal or isolation of one or more pump trucks **16** during operation. Pressurized slurry and/or water from the pump truck **16** passes through truck exit valve **238** and is directed either to upper bypass high-pressure pipeline **224***a* or lower high-pressure pipeline **224***b*. The lower high pressure pipeline **224***b* connects the exit junctions **240** to one another in series. Each of the high-pressure pipelines **224***a* and **224***b* is in fluid communication with high-pressure pipeline **24** (FIG. **1**), as indicated by arrows **225**. The parallel piping allows fluid to bypass a particular pump skid **238** while others are in operation.

An upper truck exit valve unit **242***a* and lower truck exit valve unit **242***b* are used to control fluid flow and bypass a pump skid **232** when necessary. Upper and lower truck exit valve units **242***a*, **242***b* can be manual or actuated. This allows for services and repairs to be performed as needed or desired without having to shut down other components or the entire operation.

In an example, if the pump skid **232** labeled A on FIG. **5** is to be bypassed, upper truck exit valve unit **242***a* labeled B on FIG. **5**, lower truck exit valve unit **242***b* labeled C on FIG. **5**, and lower truck exit valve unit **242***b* labeled D on FIG. **5** would all be closed. No slurry or water would therefore be able to travel through lower high-pressure pipeline **224***b* between the pump skid **238** labeled A on FIG. **5** and the pump skid **232** labeled E on FIG. **5**. Slurry or water flowing from any pump truck **16** connected to the pump skid **232** labeled E on FIG. **5** would therefore flow through a truck exit valve **238**, through upper truck exit valve unit **242***a* on the pump skid **232** labeled E on FIG. **5** and continue through upper high-pressure pipeline **224***a*.

If all pump skids **238** are on-line, then slurry and/or water flowing from the pump truck **16** connected to the pump skid would flow through a truck exit valve **238**, then could either flow through lower truck exit valve unit **242***b* to lower high-pressure pipeline **224***b* or through upper truck exit valve unit **242***a* to upper high-pressure pipeline **242***a*. In an optimized design, upper high-pressure pipeline **242***a* may have a larger diameter to accommodate a higher slurry and/or water flow rate. Upper high-pressure pipe segments **248***a* may be connected to each other with hub connectors **50**. Lower high-pressure pipe segments **248***b* may be connected to each other with hub connectors **50**.

Returning again to FIG. **1**, a single high-pressure pipeline **24** transports slurry from the collection manifold **12** or **120** to the delivery section **14**. A connection point skid **68** is situated at the junction between the collection manifold **12** and the delivery section **14**. Connection point skid **68** includes double block valves **70**, which may be used to isolate the collection manifold **12** from the delivery section **14** or to isolate one branch of the delivery section **14**. Double block isolation valves **70** may be two valves in series or a single double valve.

As can be seen in FIG. **6**, slurry flowing from the high-pressure pipeline **24** will pass through a double block valve **70** and continue through a delivery pipeline **72**. One end of delivery pipeline **72** is in fluid communication with the double block valve **70** and the other end of delivery pipeline **72** is in fluid communication with a frac skid **74** adjacent wellhead **18**. Frac skid **74** includes one or more frac manifolds **76**.

Looking at FIG. **7**, a frac manifold may include frac upper and lower master valves **78**, **80**, and a distribution head **82**. Distribution head **82** supports a number of distribution pipelines **84** which fluidly connect the distribution head **82** to a collection head **86** on the frac tree **88**. Frac tree **88** may also include a swab valve **90**, wing valves **92**, and upper and lower tree master valves **94**, **96**.

In the embodiments of FIG. **7**, the distribution head **82** and collection head **86** are identical. This distributes wear more evenly and maximizes erosion life and also allows for improved efficiency in manufacturing and installation as well as reducing the costs of carrying replacement parts on hand. Distribution and collection heads **82**, **86** may support any number of distribution pipelines **84**, for example, two to six pipelines **84**.

The distribution pipelines **84** illustrated are symmetrical with identical connection means on either end, with one end being supported by the distribution head **82** and the other end being supported by the collection head **86**. Distribution pipelines **84** may be high-pressure flexible piping with hub connectors **50**, or other quick connect connection means. The hub connectors **50** enhance leakage resistance due to flexing caused by vibration. This embodiment eliminates the need for skilled 3D arrangement during the design of the specific operation and welding on-site, as would be required for traditional fabricated hard loops used to connect frac equipment to the well.

In an example of operation, slurry that enters frac manifold **76** travels through distribution head **82** and is conveyed to collection head **86** by way of one of the distribution pipelines **84**. The slurry then travels down through frac tree **88** and wellhead **18** and into the well.

Returning to FIG. **1**, a flowback separator **98** may also be included in delivery system **10**. Separator **98** can be fluidly connected to equipment on frac skid **74** with a quick connect connection means. During flowback operations, the flowback separator **98** may separate gas, sand and fluids in the flowback stream before sending it on to an onsite collection tank.

2. Leveling System

In certain operating locations, such as in boggy terrain, the components of a delivery system **10** may undergo a significant change in elevation throughout a 24-hour period, such as up to 6 inches. Movement of this range would cause significant pipeline and equipment fatigue, leading to costly maintenance and repairs. Traditionally, equipment skids are supported by piles sunk into the ground in the range of 30 to 60 feet deep. This is a very costly method of supporting equipment skids and cannot easily be re-used at another site.

Returning to FIG. **1**, pump skids **32** and frac skids **74** may instead be supported by jacks **100**. The jacks **100** may either be hydraulic or mechanical jacks. A laser leveling system measures the elevation of multiple components of the delivery system **10** and the jacks **100** are adjusted accordingly to maintain the elevation of the components of the delivery system **10** within a required tolerance. The adjustments of the jacks could be performed manually or a dynamic control system may be used to maintain the elevation of the components of the delivery system within a required tolerance.

An example of a laser leveling system may include a stand mounted laser **102** or another elevation measurement device. The laser **102** then measures the deviation of laser targets **104** located on each of the pump skids **32** or various delivery system **10** components relative to a reference point. In an example where a dynamic system is used, the control system actuates the jacks **100**, if required, to reposition the component to be within a tolerable deviation. Alternatively, an operator could manually manipulate the jacks **100**. This process is repeated at a desired interval for each of the components with laser targets **104** so that the components of delivery system **10** are not subject to excessive stresses due to mis-

alignment cause by changes in elevation of the components. The laser leveling system is lightweight and portable and may be used for multiple operations at difference sites.

3. Erosion Protection

In order to optimize the diameter of the flow lines of delivery system **10**, a computer simulation could be performed for each new operation that had different design criteria than prior operations. If the delivery system **10** was designed to have flow lines with the same diameter throughout, a larger diameter than required would be used for some flow lines because the diameter selected would need to be large enough to accommodate the highest pressure and flow rate situation. The computer simulation would instead perform an erosion analysis to determine the velocity, and flow rates of the fluid through each flow line as well as the corresponding expected erosion pattern. The size of the equipment can then be customized and reduced where allowed, which will provide an overall cost savings.

In addition, by altering the diameter of the pipelines in various high erosion risk areas, the erosion risk to that area can be reduced. For example, increasing the diameter of a flow line just prior to or immediately following a direction change, or both, may reduce erosion of the flow line at such direction change. Other changes such as increasing the diameter of seals and making the transition between diameter changes in pipelines smooth can also reduce erosion risks and increase the useful life of the components. The erosion analysis can also identify critical components that are at risk for erosion the operator can mitigate risk of failure by replacing such components after they reach their design life.

Once high erosion risk areas are identified, such as at critical changes in diameter or direction, such areas may be coated with erosion resistant features including special surface treatments to increase its useful life. Turning, for example, to FIG. **8**, an erosion analysis can be performed on the frac tree **88**. Shaded high erosion risk regions such as at the lower branch junction **106**, upper branch junction **108**, and distribution pipeline junctions **110** could be provided with surface treatments. The surface treatments may be, for example, hard nano-composites coating, tungsten carbide hardfacing, ceramic hardfacing, or other know surface treatments means.

4. Operational Procedure

In one example embodiment of use, the delivery system **10** is assembled at a well site having a plurality of wellheads **18**. The collection manifold **12** and the delivery section **14** of the delivery system **10** are assembled concurrently, or in series with one another.

To assemble the collection manifold **12**, a plurality of pump skids **32** are remotely assembled and delivered to the well site. The pump skids **32** are provided on a ground surface at the well site, and arranged in a convenient manner to provide sufficient clearance for a plurality of pump trucks **16** to access the distribution junction **30** and the exit junction **40** on each of the pump skids **32**. Next, the a stand mounted laser **102** is employed to measure the deviation of laser targets **104** located on each of the pump skids **32**, and the jacks **100** on the pump skids are activated to adjust the elevation of each of the pump skids **32** until each of the pump skids **32** are disposed at an elevation within a predetermined tolerance. An exit branch **46** or **47** is coupled to the exit junction **40** on each of the pump skids **32**, and each of the exit branches **46**, **47** is connected to high-pressure pipeline **24**. The high-pressure pipeline **24** is assembled from pipe segments **48** and hub connectors **50** to extend between the exit branches **46**, **47** and the wellheads **18**. Either a slurry supply branch **29** or a water supply branch **33** is coupled to the distribution manifold **30** on each of the pump skids. Each slurry supply branch **29** is coupled to first low-pressure pipeline **20** extending between the slurry supply branches **29** and a source of slurry **19**, and each water supply branch **33** is coupled to second low-pressure pipeline **26** extending between the water supply branches **33** and a water source **25**.

To assemble the delivery section **14** of the delivery system **10**, a plurality of frac skids **74** are provided on a ground surface adjacent the wellheads **18**, and leveled in a manner similar to the pump skids **32** as described above. The frac manifolds **76** on each of the frac skids **74** are then coupled to a respective wellhead **18** by distribution pipelines **84** and a frac tree **88**, and the frac skids **74** are coupled to a delivery pipeline **72**, which extends toward the high-pressure pipeline **24**. The pipelines **72** and **74** are each coupled to connection point skid **68**, thereby coupling the delivery section **14** to the collection manifold **12**.

Once the delivery system **10** is assembled, pump trucks **16** are delivered to the well site. A plurality of pump trucks **16** are coupled to the distribution junctions **30** on each of the pump skids **32** by truck connection lines **34** and to the exit junctions **40** on each of the pump skids **32** by truck exit lines **36**. In other embodiments, the pump trucks **16** are coupled to the pump skids **32** concurrently with the assembly of the collection manifold **12**.

To initiate delivery of fluids to the wellbores **18**, the low-pressure pipelines **20** and **26** are respectively coupled to the supply of slurry **19** and to the water source **25**, and the pump trucks **16** are activated. Activation of the pump trucks **16** induces slurry to flow from the supply of slurry **19** through the first low-pressure pipeline **20** and slurry supply branches **29**. The slurry then enters the distribution junction **30** on a particular pump skid **32**, is conducted through the pump truck **16** and is discharged into the exit junction **40** on the particular pump skid **32**. The slurry then flows through the slurry exit branch **46** and into the high-pressure pipeline **24** extending toward the wellheads **18**. Similarly, activation of the pump trucks **16** induces water to flow from the water source **25** through second low-pressure pipeline **26** and water supply branches **33**. The water then enters the distribution junction **30** on a particular pump skid **32**, is conducted through the pump truck **16** and is discharged into the exit junction **40** on the particular pump skid **32**. The water then flows through the water exit branch **47** and into the high-pressure pipeline **24** extending toward the wellheads **18**.

The water and slurry mix with one another as they flow through the high-pressure pipeline **24**. The resulting slurry enters the delivery section **14**, where it is distributed as necessary to all or some portion of the wellheads **18**. Various valves are available for isolating any of the wellheads **18** from the slurry entering the delivery section **14**. For example, upper and lower tree master valves **94**, **96** associated with a particular wellhead **18** are closed to prevent slurry from entering the particular wellhead **18**.

The various valves provided on the collection manifold **12** are employed to serve various purposes. For example, if it becomes necessary to service or repair a particular pump truck **16** while the other pump trucks **16** continue to operate, the truck exit valve **38** associated with the particular pump truck **16** is moved to a closed position to fluidly isolate the particular pump truck **16** from the high-pressure pipeline **24**. The particular pump truck **16** is repaired and truck exit valve **38** is returned to an open position to fluidly recouple the particular pump truck to the high pressure pipeline. Also, for example, if it becomes necessary to provide only water to a wellhead **18**, one or more of the valves in truck exit valve unit **42** is moved to a closed position for each of the pump skids to

which the first low-pressure pipeline is coupled. Thus, no slurry is pumped into the high-pressure pipeline **24**, and only water is delivered to the wellhead **18**.

When fluid delivery to the wellheads **18** at the well site is no longer required, the delivery system **10** is disassembled. The pump skids **32** are decoupled from the pump trucks **16**, the supply branches **29**, **33** and the exit branches **46**, **47**, and the frac skids **74** are decoupled from the delivery pipeline **72** and the distribution pipelines **84**. The pump skids **32** and the frac skids **74** are refurbished and moved to a second well site to be assembled into another delivery system (not shown) that suits the second well site. Similarly, the pipelines **20**, **24** and **26** are disassembled, refurbished and subsequently reassembled into another delivery system.

Many modifications and other embodiments of the invention will come to the mind of those skilled in the art having the benefit of the teachings presented in the foregoing descriptions and the associated drawings. Therefore, it is to be understood that the invention is not to be limited to the illustrated embodiments disclosed, and that modifications and other embodiments are intended to be included within the scope of the appended claims.

What is claimed is:

1. A delivery system for delivering fluid to a wellhead, comprising:

a water pipeline comprising an end in fluid communication with a water supply;

a water supply branch that is in fluid communication with the water pipeline and that connects to an inlet of a water pump;

a slurry pipeline comprising an end in fluid communication with a supply of slurry;

a slurry supply branch that is in fluid communication with the slurry pipeline and that connects to an inlet of a slurry pump;

a high-pressure pipeline comprising an end in fluid communication with the wellhead, wherein the high-pressure pipeline comprises first and second high-pressure pipe segments coupled to one another by a hub connector comprising a seal ring disposed longitudinally between the first and second pipe segments and a clamping ring with two opposing members operable to urge the first and second pipe segments longitudinally toward one another in response to movement of the two opposing members toward one another in a lateral direction;

a water exit branch that is in fluid communication with the high pressure pipeline and that connects to an outlet of the water pump; and

a slurry exit branch that is in fluid communication with the high pressure pipeline and that connects to an outlet of the slurry pump.

2. The delivery system according to claim **1**, further comprising a first pump skid supporting a first distribution junction and a first exit junction thereon, wherein the slurry supply branch connects to the inlet of the slurry pump through the first distribution junction and wherein the slurry exit branch connects to the outlet of the slurry pump through the first exit junction.

3. The delivery system according to claim **2**, further comprising a second pump skid supporting a second distribution junction and a second exit junction thereon, wherein the water supply branch connects to the inlet of the water pump through the second distribution junction and wherein the water exit branch connects to the outlet of the water pump through the second exit junction.

4. The delivery system according to claim **2**, wherein the slurry supply branch connects to a plurality of slurry pumps through the first distribution junction and wherein the slurry exit branch connects to the plurality of slurry pumps through the first exit junction.

5. The delivery system according to claim **2**, further comprising a valve fluidly coupled between the outlet of the slurry pump and the first exit junction such that the slurry pump is selectively isolatable from the high pressure pipeline.

6. The delivery system according to claim **4**, further comprising a valve unit fluidly coupled between the first exit junction and the slurry exit branch such that the plurality of slurry pumps are selectively isolatable from the high pressure pipeline.

7. The delivery system according to claim **1**, wherein the supply of slurry is in fluid communication with the water supply.

8. The delivery system according to claim **1**, wherein the water pipeline and the slurry pipeline are in parallel with the high-pressure pipeline.

9. The delivery system according to claim **1**, further comprising a frac skid adjacent the wellhead, the frac skid including at least one frac manifold in fluid communication with the high-pressure pipeline.

10. The delivery system according to claim **3**, wherein the first and second pump skids each include a jack operable to adjust an elevation of the respective pump skid.

11. The delivery system according to claim **10**, further comprising an elevation measurement device, and wherein the first and second pump skids each include a leveling target thereon providing a reference for the elevation measurement device.

12. A collection manifold for delivering fluid to a wellhead, the collection manifold comprising:

a first low-pressure pipeline comprising an end in fluid communication with a source of fluid;

a high-pressure pipeline having an end in fluid communication with the wellhead,

a first pump skid supporting a first distribution junction and a first exit junction thereon, wherein the first low-pressure pipeline connects to an inlet of a first pump through the first distribution junction and wherein the high-pressure pipeline connects to the outlet of the first pump through the first exit junction;

a second pump skid disposed remotely from the first pump skid, wherein the second pump skid supports a second distribution junction and a second exit junction thereon, and wherein the first low-pressure pipeline connects to an inlet of a second pump through the second distribution junction, wherein the high-pressure pipeline connects to the outlet of the second pump through the second exit junction, and wherein the first and second exit junctions are fluidly coupled in series to one another; and

a bypass high-pressure pipeline in fluid communication with the first and second exit junctions.

13. The collection manifold according to claim **12**, wherein the high-pressure pipeline connects to a plurality of pumps through a plurality of inlets defined in the first exit junction, and wherein the plurality of inlets are arranged on two opposing sides of the first pump skid.

14. The collection manifold according to claim **12**, wherein the first low-pressure pipeline is a slurry pipeline in fluid communication with a source of slurry.

15. The collection manifold according to claim **14**, further comprising a second low pressure pipeline, wherein the second low-pressure pipeline is a water pipeline in fluid communication with a water source and in fluid communication with the high-pressure pipeline through a third pump.

16. The collection manifold according to claim **12**, further comprising a safety blanket positioned between the first and second pump skids.

17. The collection manifold according to claim **12**, wherein the high-pressure pipeline comprises first and second high-pressure pipe segments coupled to one another by a hub connector comprising a seal ring disposed longitudinally between the first and second pipe segments and a clamping ring with two opposing members operable to urge the first and second pipe segments longitudinally toward one another in response to movement of the two opposing members toward one another in a lateral direction.

18. A method of assembling a manifold for delivering fluid to a wellhead, the method comprising:

assembling a distribution junction and an exit junction to each of a plurality of bases to form a plurality of pump skids;

arranging the plurality of pump skids at a well site;

fluidly coupling a first low-pressure pipeline to at least one the distribution junctions disposed on the plurality of pump skids, wherein the first low pressure pipeline extends to a fluid source;

fluidly coupling a high-pressure pipeline to each of the exit junctions disposed on the plurality of pump skids, wherein the high-pressure pipeline extends to the wellhead, and wherein the exit junctions are fluidly coupled in series to one another; and

fluidly coupling a bypass high-pressure pipeline in fluid communication with the exit junctions.

* * * * *