UNITED STATES PATENT AND TRADEMARK OFFICE

UNITED STATES DEPARTMENT OF COMMERCE
United States Patent and Trademark Office
Address: COMMISSIONER FOR PATENTS
P.O. Box 1450
Alexandria, Virginia 22313-1450
www.uspto.gov

APPLICATION NO.	FILING DATE	FIRST NAMED INVENTOR	ATTORNEY DOCKET NO.	CONFIRMATION NO.
12/565,909	09/24/2009	Jong Taek YOON	103-1339	1417

38209 7590 07/23/2013
Stanzione & Kim, LLP
919 18th Street, NW
Suite 440
Washington, DC 20006

EXAMINER
TANG, SON M

ART UNIT	PAPER NUMBER
2681	

NOTIFICATION DATE	DELIVERY MODE
07/23/2013	ELECTRONIC

Please find below and/or attached an Office communication concerning this application or proceeding.

The time period for reply, if any, is set in the attached communication.

Notice of the Office communication was sent electronically on above-indicated "Notification Date" to the following e-mail address(es):

usptomail@snkiplaw.com
patent@snkiplaw.com

One-E-Way Exhibit 2006
Samsung Electronics Co., Ltd. et al. v. One-E-Way, Inc.
IPR2025-01540

Notice of Abandonment	Application No.	Applicant(s)
	12/565,909	YOON ET AL.
	Examiner	**Art Unit**
	SON M. TANG	2681

-- The MAILING DATE of this communication appears on the cover sheet with the correspondence address--

This application is abandoned in view of:

1. ☒ Applicant's failure to timely file a proper reply to the Office letter mailed on *19 December 2012*.
   (a) ☐ A reply was received on _____ (with a Certificate of Mailing or Transmission dated _____), which is after the expiration of the period for reply (including a total extension of time of _____ month(s)) which expired on _____.
   (b) ☐ A proposed reply was received on _____, but it does not constitute a proper reply under 37 CFR 1.113 (a) to the final rejection. (A proper reply under 37 CFR 1.113 to a final rejection consists only of: (1) a timely filed amendment which places the application in condition for allowance; (2) a timely filed Notice of Appeal (with appeal fee); or (3) a timely filed Request for Continued Examination (RCE) in compliance with 37 CFR 1.114).
   (c) ☐ A reply was received on _____ but it does not constitute a proper reply, or a bona fide attempt at a proper reply, to the non-final rejection. See 37 CFR 1.85(a) and 1.111. (See explanation in box 7 below).
   (d) ☒ No reply has been received.

2. ☐ Applicant's failure to timely pay the required issue fee and publication fee, if applicable, within the statutory period of three months from the mailing date of the Notice of Allowance (PTOL-85).
   (a) ☐ The issue fee and publication fee, if applicable, was received on _____ (with a Certificate of Mailing or Transmission dated _____), which is after the expiration of the statutory period for payment of the issue fee (and publication fee) set in the Notice of Allowance (PTOL-85).
   (b) ☐ The submitted fee of $_____ is insufficient. A balance of $_____ is due.
   The issue fee required by 37 CFR 1.18 is $_____. The publication fee, if required by 37 CFR 1.18(d), is $_____.
   (c) ☐ The issue fee and publication fee, if applicable, has not been received.

3. ☐ Applicant's failure to timely file corrected drawings as required by, and within the three-month period set in, the Notice of Allowability (PTO-37).
   (a) ☐ Proposed corrected drawings were received on _____ (with a Certificate of Mailing or Transmission dated _____), which is after the expiration of the period for reply.
   (b) ☐ No corrected drawings have been received.

4. ☐ The letter of express abandonment which is signed by the attorney or agent of record, the assignee of the entire interest, or all of the applicants.

5. ☐ The letter of express abandonment which is signed by an attorney or agent (acting in a representative capacity under 37 CFR 1.34(a)) upon the filing of a continuing application.

6. ☐ The decision by the Board of Patent Appeals and Interference rendered on _____ and because the period for seeking court review of the decision has expired and there are no allowed claims.

7. ☐ The reason(s) below:

/DANIEL WU/
Supervisory Patent Examiner, Art Unit 2681

Petitions to revive under 37 CFR 1.137(a) or (b), or requests to withdraw the holding of abandonment under 37 CFR 1.181, should be promptly filed to minimize any negative effects on patent term.

UNITED STATES PATENT AND TRADEMARK OFFICE

UNITED STATES DEPARTMENT OF COMMERCE
United States Patent and Trademark Office
Address: COMMISSIONER FOR PATENTS
P.O. Box 1450
Alexandria, Virginia 22313-1450
www.uspto.gov

APPLICATION NO.	FILING DATE	FIRST NAMED INVENTOR	ATTORNEY DOCKET NO.	CONFIRMATION NO.
12/565,909	09/24/2009	Jong Taek YOON	103-1339	1417

38209 7590 12/19/2012
Stanzione & Kim, LLP
919 18th Street, NW
Suite 440
Washington, DC 20006

EXAMINER
TANG, SON M

ART UNIT	PAPER NUMBER
2681	

MAIL DATE	DELIVERY MODE
12/19/2012	PAPER

Please find below and/or attached an Office communication concerning this application or proceeding.

The time period for reply, if any, is set in the attached communication.

Office Action Summary	Application No.	Applicant(s)	
	12/565,909	YOON ET AL.	
	Examiner	Art Unit	
	SON M. TANG	2681	

-- The MAILING DATE of this communication appears on the cover sheet with the correspondence address --

Period for Reply

A SHORTENED STATUTORY PERIOD FOR REPLY IS SET TO EXPIRE 3 MONTH(S) OR THIRTY (30) DAYS, WHICHEVER IS LONGER, FROM THE MAILING DATE OF THIS COMMUNICATION.

- Extensions of time may be available under the provisions of 37 CFR 1.136(a). In no event, however, may a reply be timely filed after SIX (6) MONTHS from the mailing date of this communication.
- If NO period for reply is specified above, the maximum statutory period will apply and will expire SIX (6) MONTHS from the mailing date of this communication.
- Failure to reply within the set or extended period for reply will, by statute, cause the application to become ABANDONED (35 U.S.C. § 133). Any reply received by the Office later than three months after the mailing date of this communication, even if timely filed, may reduce any earned patent term adjustment. See 37 CFR 1.704(b).

Status

1)☒ Responsive to communication(s) filed on *RCE filed 10/19/2012*.

2a)☐ This action is **FINAL**. 2b)☒ This action is non-final.

3)☐ An election was made by the applicant in response to a restriction requirement set forth during the interview on _____; the restriction requirement and election have been incorporated into this action.

4)☐ Since this application is in condition for allowance except for formal matters, prosecution as to the merits is closed in accordance with the practice under *Ex parte Quayle*, 1935 C.D. 11, 453 O.G. 213.

Disposition of Claims

5)☒ Claim(s) *1-5,8-17 and 19-34* is/are pending in the application.

5a) Of the above claim(s) _____ is/are withdrawn from consideration.

6)☐ Claim(s) _____ is/are allowed.

7)☒ Claim(s) *1-5,8-17 and 19-34* is/are rejected.

8)☐ Claim(s) _____ is/are objected to.

9)☐ Claim(s) _____ are subject to restriction and/or election requirement.

Application Papers

10)☐ The specification is objected to by the Examiner.

11)☐ The drawing(s) filed on _____ is/are: a)☐ accepted or b)☐ objected to by the Examiner.

Applicant may not request that any objection to the drawing(s) be held in abeyance. See 37 CFR 1.85(a).

Replacement drawing sheet(s) including the correction is required if the drawing(s) is objected to. See 37 CFR 1.121(d).

12)☐ The oath or declaration is objected to by the Examiner. Note the attached Office Action or form PTO-152.

Priority under 35 U.S.C. § 119

13)☐ Acknowledgment is made of a claim for foreign priority under 35 U.S.C. § 119(a)-(d) or (f).

a)☐ All b)☐ Some * c)☐ None of:

1.☐ Certified copies of the priority documents have been received.

2.☐ Certified copies of the priority documents have been received in Application No. _____.

3.☐ Copies of the certified copies of the priority documents have been received in this National Stage application from the International Bureau (PCT Rule 17.2(a)).

* See the attached detailed Office action for a list of the certified copies not received.

Attachment(s)

1) ☒ Notice of References Cited (PTO-892)

2) ☐ Notice of Draftsperson's Patent Drawing Review (PTO-948)

3) ☒ Information Disclosure Statement(s) (PTO/SB/08) Paper No(s)/Mail Date *10/19/12*.

4) ☐ Interview Summary (PTO-413) Paper No(s)/Mail Date. _____ .

5) ☐ Notice of Informal Patent Application

6) ☐ Other: _____.

DETAILED ACTION

Continued Examination Under 37 CFR 1.114

1. A request for continued examination under 37 CFR 1.114, including the fee set forth in 37 CFR 1.17(e), was filed in this application after final rejection. Since this application is eligible for continued examination under 37 CFR 1.114, and the fee set forth in 37 CFR 1.17(e) has been timely paid, the finality of the previous Office action has been withdrawn pursuant to 37 CFR 1.114. Applicant's submission filed on 10/19/2012 has been entered.

Claim Rejections - 35 USC § 103

2. The following is a quotation of 35 U.S.C. 103(a) which forms the basis for all obviousness rejections set forth in this Office action:

> (a) A patent may not be obtained though the invention is not identically disclosed or described as set forth in section 102 of this title, if the differences between the subject matter sought to be patented and the prior art are such that the subject matter as a whole would have been obvious at the time the invention was made to a person having ordinary skill in the art to which said subject matter pertains. Patentability shall not be negatived by the manner in which the invention was made.

3. Claims **1-5, 8-23, 25-31 and 33-34** are 35 U.S.C. 103 (a) as being unpatentable over **Yang et al**. [US 6,690,431; Yang] in view of **Bergman et al**. [US 2009/022,552,8; Bergman] and further in view of **Koyama et al**. [US 8,311,249].

Regarding to claims 1, 8, 10, 13-14, 19-20, 25-28, 31, 33-34: Yang discloses a method of controlling a device, and the device is an audio/video (AV) amplifier system comprising, an external device (e.g. CD, VCD, LD, DVD, VTR) and would obviously include a signal transmitter to output a signal upon receipt of power on/off signal from user [col. 4, lines 1-2], the external device (e.g. DVD) connected to the AV amplifier system [Fig. 2] having a receiver (e.g. 101) and a coupled power control grouping (e.g. A/D 701, digital signal analyzer 702 and CPU

3), wherein, the CPU can be a microcomputer (3) to control a power supplied to the audio device (e.g. volume 202), and to control an audio output signal (e.g. audio output) upon receipt of a switched on-signal from the CPU [see Figs. 2-6, col. 2, lines 50-66, col. 5, lines 15-67 and col. 6, lines 1-25], Yang teaches an A/D converter (e.g. rectifier) for converting the received signal from the external device, wherein the signal is being compared with an experimental threshold values to determine which signal source is received (e.g. CD, VCD, LD, DVD or VTR) and if the condition is met, the digital signal analyzer (702) outputs signal to microprocessor to control power supply, because the comparison switch (702) is configured to determine various different sources, which does not specifically mention of when the switch is turn off.

Bergman teaches an audio device with integrated switching power supply comprises a switch (200) in a formed of a transistor which configured to receive a suppressed noise signal from filter (204) and rectifier (206), and turn on/off to control power supply. With that, it is obvious one having ordinary skill in the art at the time the invention was made, to employ a switch suggested by Bergman into the coupled power control grouping of Yang, so that the switch is be able to turn on/off, for benefit of protecting the system from bad signal and performing more accuracy. Although, Bergman input signal is an AC signal, not an audio signal from an external device, but the concept of filtering noise signal and rectifying the signal prior to switch on power supply to the system can be applied in any appropriate system, because most electrical signal contains noise.

Although, **Yang and Bergman** made obvious above, Yang shows a digital signal processing section (2) for processing audio signal, except for not specifically mention that the digital processing section includes a digital interface receiver (DIR) to determine a sampling

frequency of the optical signal from the receiver so as to provide a digital optical signal to a digital signal processor (DSP) according to the optical signal; and the DSP to digitally process the digital optical signal received form the DIR and to generate the audio output signal.

Koyama et al. teaches an Audio Visual (AV) system comprises, a DIR (31) for converting the optical digital audio signal into a digital audio signal so as to provide the digital optical signal to a digital signal processor (DSP) and to generate the audio output signal [see Fig. 2, col. 4, lines 52-67 to col. 5, lines 1-28]. In an analogous of art, one having ordinary skill in the art at the time the invention was made, would have substituted one known element for another, such as DIR and DSP as suggested by Koyama, the results of the substitution would have been predictable, because the DIR and DSP are the known components used in AV system, specifically for optical signal.

Regarding to claims 2-3, 9, 15-16 and 30: Yang further discloses that the receiver (102) received digital signal through optic fiber [cited at col. 5, lines 40-43 and 50-52], that constitutes of claimed that the signal is an optical signal including a clock signal and audio signal, because digital audio signal is being transmitted in a form of pulses that the clock signal is included to carry data, such as audio.

Regarding to claims 11, 21 and 29: Yang discloses the AV system which used to enhance the power of the electro-volume of the speaker system [col. 1, lines 12-19], although, Yang does not show the speaker system, it is inherently included in the AV system of Yang, because the AV system is intended to enhance the power for the audio speaker.

Regarding to claim 23: Yang discloses a plurality of electronic devices (e.g. CD, VCD, LD, DVD and VTR) connected to an electronic switch device (101) of the AV system [Fig. 2],

the connection normally connect through the coupling or port of the devices. With that, the connection port of the receiver device is inherently included with the AV system, in order for the CD device to connect to the AV system.

Regarding to claims 4-5, 12 and 17: Yang and the combination made obvious above, Yang shows the coupled power control grouping (e.g. 701, 702 and 3), except for not specifically mention that the power control grouping includes a filter to cancel noise from the received signal, a rectifier to rectify the noise-cancelled signal and a switch to turn on upon receipt of the rectified signal.

Bergman teaches an audio device with integrated switching power supply comprises, a filter (204) for filtering noise, rectifier (206) for rectifying signal and a power switch (200) connected to the rectifier [see Figs. 2-3 and paragraphs 0025-0027], although, the receiving signal is not audio signal from the external device (e.g. CD, DVD), the reference shows a known concept of filtering noise from the any appropriate receiving signal from any appropriate sources. Therefore, it is obvious to one having ordinary skill in the art at the time the invention was made, to implement a noise filter, rectifier and power switch as taught by Bergman with the AV processing circuit of Yang, the implement would yield a predictable results, the resulted would improve the system, because most receiving signal from other device is not noise free, which needs to filter for more accuracy.

4. Claims **24 and 32** are rejected under 35 U.S.C. 103 (a) as being unpatentable over **Yang** in views of **Bergman** and **Koyama**, and further in view of **Holmgren et al.** [US 8,024,055; Holmgren].

Regarding to claims 24 and 32: Yang and the combination made obvious above, except for not specifically mention that the connection between the receiver and external source through a wireless connection. **Holmgren** teaches a system for controlling amplifier comprising a plurality of electronic devices (e.g. 102, 104, 106, 110 and 112) is connected through wireless connection [see Fig. 1-2A, col. 4, lines 1-53 and col. 5, lines 32-45]. One having ordinary skill artisan would found it obvious to apply an alternative technology such as wireless connection as suggested by Holmgren, the modification would provide a benefit of at least convenience to use and less labor for installation.

Conclusion

Any inquiry concerning this communication or earlier communications from the examiner should be directed to SON M. TANG whose telephone number is (571)272-2962. The examiner can normally be reached on 5/8.

If attempts to reach the examiner by telephone are unsuccessful, the examiner's supervisor, Daniel Wu can be reached on (571)272-2964. The fax phone number for the organization where this application or proceeding is assigned is 571-273-8300.

Information regarding the status of an application may be obtained from the Patent Application Information Retrieval (PAIR) system. Status information for published applications may be obtained from either Private PAIR or Public PAIR. Status information for unpublished applications is available through Private PAIR only. For more information about the PAIR system, see http://pair-direct.uspto.gov. Should you have questions on access to the Private PAIR system, contact the Electronic Business Center (EBC) at 866-217-9197 (toll-free). If you would

like assistance from a USPTO Customer Service Representative or access to the automated information system, call 800-786-9199 (IN USA OR CANADA) or 571-272-1000.

/S. M. T./
Examiner, Art Unit 2681

/DANIEL WU/
Supervisory Patent Examiner, Art Unit 2681

Notice of References Cited	Application/Control No. 12/565,909	Applicant(s)/Patent Under Reexamination YOON ET AL.	
	Examiner SON M. TANG	Art Unit 2681	Page 1 of 1

U.S. PATENT DOCUMENTS

*		Document Number Country Code-Number-Kind Code	Date MM-YYYY	Name	Classification
*	A	US-8,311,249	11-2012	Koyama et al.	381/306
	B	US-			
	C	US-			
	D	US-			
	E	US-			
	F	US-			
	G	US-			
	H	US-			
	I	US-			
	J	US-			
	K	US-			
	L	US-			
	M	US-			

FOREIGN PATENT DOCUMENTS

*		Document Number Country Code-Number-Kind Code	Date MM-YYYY	Country	Name	Classification
	N					
	O					
	P					
	Q					
	R					
	S					
	T					

NON-PATENT DOCUMENTS

*		Include as applicable: Author, Title Date, Publisher, Edition or Volume, Pertinent Pages)
	U	
	V	
	W	
	X	

*A copy of this reference is not being furnished with this Office action. (See MPEP § 707.05(a).)
Dates in MM-YYYY format are publication dates. Classifications may be US or foreign.

Search Notes	Application/Control No.	Applicant(s)/Patent Under Reexamination
	12565909	YOON ET AL.
	Examiner	**Art Unit**
	SON M TANG	2681

SEARCHED

Class	Subclass	Date	Examiner
340	5.1,516,635,653-654	12/5/2011	ST
381	71.1,14,26-28,143,372	12/5/2011	ST

SEARCH NOTES

Search Notes	Date	Examiner
Consulted with Daniel Wu	6/5/2012	ST
updated search	6/5/2012	ST
Consulted with Daniel Wu	12/12/2012	ST

INTERFERENCE SEARCH

Class	Subclass	Date	Examiner

PTO/SB/08a (01-10)
Approved for use through 07/31/2012. OMB 0651-0031
U.S. Patent and Trademark Office; U.S. DEPARTMENT OF COMMERCE
Under the Paperwork Reduction Act of 1995, no persons are required to respond to a collection of information unless it contains a valid OMB control number.

INFORMATION DISCLOSURE STATEMENT BY APPLICANT

(Not for submission under 37 CFR 1.99)

Application Number	12565909
Filing Date	2009-09-24
First Named Inventor	Jong Taek YOON
Art Unit	1417
Examiner Name	Son M. Tang
Attorney Docket Number	103-1339

U.S.PATENTS Remove

Examiner Initial*	Cite No	Patent Number	Kind Code[1]	Issue Date	Name of Patentee or Applicant of cited Document	Pages,Columns,Lines where Relevant Passages or Relevant Figures Appear
	1	6690431		2004-02-10	YANG et al.	

If you wish to add additional U.S. Patent citation information please click the Add button. Add

U.S.PATENT APPLICATION PUBLICATIONS Remove

Examiner Initial*	Cite No	Publication Number	Kind Code[1]	Publication Date	Name of Patentee or Applicant of cited Document	Pages,Columns,Lines where Relevant Passages or Relevant Figures Appear
	1					

If you wish to add additional U.S. Published Application citation information please click the Add button. Add

FOREIGN PATENT DOCUMENTS Remove

Examiner Initial*	Cite No	Foreign Document Number[3]	Country Code[2] ¡	Kind Code[4]	Publication Date	Name of Patentee or Applicant of cited Document	Pages,Columns,Lines where Relevant Passages or Relevant Figures Appear	T[5]
	1							☐

If you wish to add additional Foreign Patent Document citation information please click the Add button Add

NON-PATENT LITERATURE DOCUMENTS Remove

Examiner Initials*	Cite No	Include name of the author (in CAPITAL LETTERS), title of the article (when appropriate), title of the item (book, magazine, journal, serial, symposium, catalog, etc), date, pages(s), volume-issue number(s), publisher, city and/or country where published.	T[5]

ALL REFERENCES CONSIDERED EXCEPT WHERE LINED THROUGH. /S.T./

INFORMATION DISCLOSURE STATEMENT BY APPLICANT (Not for submission under 37 CFR 1.99)	Application Number	12565909
	Filing Date	2009-09-24
	First Named Inventor	Jong Taek YOON
	Art Unit	1417
	Examiner Name	Son M. Tang
	Attorney Docket Number	103-1339

	1	Korean Office Action Issued on September 18, 2012 in KR Patent Application No. 200910210341.0	☐

If you wish to add additional non-patent literature document citation information please click the Add button **Add**

EXAMINER SIGNATURE

Examiner Signature	/Son Tang/	Date Considered	12/12/2012

*EXAMINER: Initial if reference considered, whether or not citation is in conformance with MPEP 609. Draw line through a citation if not in conformance and not considered. Include copy of this form with next communication to applicant.

[1] See Kind Codes of USPTO Patent Documents at www.USPTO.GOV or MPEP 901.04. [2] Enter office that issued the document, by the two-letter code (WIPO Standard ST.3). [3] For Japanese patent documents, the indication of the year of the reign of the Emperor must precede the serial number of the patent document. [4] Kind of document by the appropriate symbols as indicated on the document under WIPO Standard ST.16 if possible. [5] Applicant is to place a check mark here if English language translation is attached.

ALL REFERENCES CONSIDERED EXCEPT WHERE LINED THROUGH. /S.T./

INFORMATION DISCLOSURE STATEMENT BY APPLICANT (Not for submission under 37 CFR 1.99)	Application Number	12565909
	Filing Date	2009-09-24
	First Named Inventor	Jong Taek YOON
	Art Unit	1417
	Examiner Name	Son M. Tang
	Attorney Docket Number	103-1339

CERTIFICATION STATEMENT

Please see 37 CFR 1.97 and 1.98 to make the appropriate selection(s):

☐ That each item of information contained in the information disclosure statement was first cited in any communication from a foreign patent office in a counterpart foreign application not more than three months prior to the filing of the information disclosure statement. See 37 CFR 1.97(e)(1).

OR

☐ That no item of information contained in the information disclosure statement was cited in a communication from a foreign patent office in a counterpart foreign application, and, to the knowledge of the person signing the certification after making reasonable inquiry, no item of information contained in the information disclosure statement was known to any individual designated in 37 CFR 1.56(c) more than three months prior to the filing of the information disclosure statement. See 37 CFR 1.97(e)(2).

☐ See attached certification statement.

☐ Fee set forth in 37 CFR 1.17 (p) has been submitted herewith.

☒ None

SIGNATURE

A signature of the applicant or representative is required in accordance with CFR 1.33, 10.18. Please see CFR 1.4(d) for the form of the signature.

Signature	/Patrick J. Stanzione/	Date (YYYY-MM-DD)	2012-10-19
Name/Print	Patrick J. Stanzione	Registration Number	40,434

This collection of information is required by 37 CFR 1.97 and 1.98. The information is required to obtain or retain a benefit by the public which is to file (and by the USPTO to process) an application. Confidentiality is governed by 35 U.S.C. 122 and 37 CFR 1.14. This collection is estimated to take 1 hour to complete, including gathering, preparing and submitting the completed application form to the USPTO. Time will vary depending upon the individual case. Any comments on the amount of time you require to complete this form and/or suggestions for reducing this burden, should be sent to the Chief Information Officer, U.S. Patent and Trademark Office, U.S. Department of Commerce, P.O. Box 1450, Alexandria, VA 22313-1450. DO NOT SEND FEES OR COMPLETED FORMS TO THIS ADDRESS. **SEND TO: Commissioner for Patents, P.O. Box 1450, Alexandria, VA 22313-1450.**

ALL REFERENCES CONSIDERED EXCEPT WHERE LINED THROUGH. /S.T./

Privacy Act Statement

The Privacy Act of 1974 (P.L. 93-579) requires that you be given certain information in connection with your submission of the attached form related to a patent application or patent. Accordingly, pursuant to the requirements of the Act, please be advised that: (1) the general authority for the collection of this information is 35 U.S.C. 2(b)(2); (2) furnishing of the information solicited is voluntary; and (3) the principal purpose for which the information is used by the U.S. Patent and Trademark Office is to process and/or examine your submission related to a patent application or patent. If you do not furnish the requested information, the U.S. Patent and Trademark Office may not be able to process and/or examine your submission, which may result in termination of proceedings or abandonment of the application or expiration of the patent.

The information provided by you in this form will be subject to the following routine uses:

1. The information on this form will be treated confidentially to the extent allowed under the Freedom of Information Act (5 U.S.C. 552) and the Privacy Act (5 U.S.C. 552a). Records from this system of records may be disclosed to the Department of Justice to determine whether the Freedom of Information Act requires disclosure of these record s.

2. A record from this system of records may be disclosed, as a routine use, in the course of presenting evidence to a court, magistrate, or administrative tribunal, including disclosures to opposing counsel in the course of settlement negotiations.

3. A record in this system of records may be disclosed, as a routine use, to a Member of Congress submitting a request involving an individual, to whom the record pertains, when the individual has requested assistance from the Member with respect to the subject matter of the record.

4. A record in this system of records may be disclosed, as a routine use, to a contractor of the Agency having need for the information in order to perform a contract. Recipients of information shall be required to comply with the requirements of the Privacy Act of 1974, as amended, pursuant to 5 U.S.C. 552a(m).

5. A record related to an International Application filed under the Patent Cooperation Treaty in this system of records may be disclosed, as a routine use, to the International Bureau of the World Intellectual Property Organization, pursuant to the Patent Cooperation Treaty.

6. A record in this system of records may be disclosed, as a routine use, to another federal agency for purposes of National Security review (35 U.S.C. 181) and for review pursuant to the Atomic Energy Act (42 U.S.C. 218(c)).

7. A record from this system of records may be disclosed, as a routine use, to the Administrator, General Services, or his/her designee, during an inspection of records conducted by GSA as part of that agency's responsibility to recommend improvements in records management practices and programs, under authority of 44 U.S.C. 2904 and 2906. Such disclosure shall be made in accordance with the GSA regulations governing inspection of records for this purpose, and any other relevant (i.e., GSA or Commerce) directive. Such disclosure shall not be used to make determinations about individuals.

8. A record from this system of records may be disclosed, as a routine use, to the public after either publication of the application pursuant to 35 U.S.C. 122(b) or issuance of a patent pursuant to 35 U.S.C. 151. Further, a record may be disclosed, subject to the limitations of 37 CFR 1.14, as a routine use, to the public if the record was filed in an application which became abandoned or in which the proceedings were terminated and which application is referenced by either a published application, an application open to public inspections or an issued patent.

9. A record from this system of records may be disclosed, as a routine use, to a Federal, State, or local law enforcement agency, if the USPTO becomes aware of a violation or potential violation of law or regulation.

ALL REFERENCES CONSIDERED EXCEPT WHERE LINED THROUGH. /S.T./

EAST Search History

EAST Search History (Prior Art)

Ref #	Hits	Search Query	DBs	Default Operator	Plurals	Time Stamp
S68	19456	(audio/visual audio/video AV audio) near3 (system device amplifier) and (wireless) same receiver	US-PGPUB; USPAT; USOCR; FPRS; EPO; JPO; DERWENT; IBM_TDB	OR	OFF	2012/06/05 20:09
S69	4739	(audio/visual audio/video AV audio) near3 (system device amplifier) same (wireless wired) same receiver	US-PGPUB; USPAT; USOCR; FPRS; EPO; JPO; DERWENT; IBM_TDB	OR	OFF	2012/06/05 20:10
S70	453	(audio/visual audio/video AV) near3 (system device amplifier) same (wireless wired) same receiver	US-PGPUB; USPAT; USOCR; FPRS; EPO; JPO; DERWENT; IBM_TDB	OR	OFF	2012/06/05 20:10
S71	132	(audio/visual audio/video AV) near3 (system device amplifier) same (wireless wired) same (receiver with transmitter)	US-PGPUB; USPAT; USOCR; FPRS; EPO; JPO; DERWENT; IBM_TDB	OR	OFF	2012/06/05 20:10
S72	22	(audio/visual audio/video AV) near3 (system device amplifier) same (wireless wired) same (receiver with transmitter) same (CD DVD)	US-PGPUB; USPAT; USOCR; FPRS; EPO; JPO; DERWENT; IBM_TDB	OR	OFF	2012/06/05 20:14
S73	18	("4858006" | "5170159" | "5539477" | "5548346" | "5754254" | "5754256" | "5838393" | "5917557" | "6118496" | "6122018" | "6167140" | "6340968").PN. OR ("6690431").URPN.	US-PGPUB; USPAT; USOCR	OR	OFF	2012/06/05 20:28
S74	70	(audio/visual audio/video AV multimedia reproduction) near3 (system device apparatus amplifier) same (wireless) same (receiver same transmitter) same (CD DVD)	US-PGPUB; USPAT; USOCR; FPRS; EPO; JPO; DERWENT; IBM_TDB	OR	OFF	2012/06/05 20:39
S75	0	"6690431".pn. and optical	US-PGPUB; USPAT; USOCR; FPRS; EPO; JPO; DERWENT; IBM_TDB	OR	ON	2012/12/11 20:18
S76	0	(audio near3 (system device)) same (optical near3 signal) same (digital	US-PGPUB; USPAT;	OR	ON	2012/12/11 20:21

		near3 interface near2 receiver)	USOCR; FPRS; EPO; JPO; DERWENT; IBM_TDB			
S77	8	(audio near3 (system device)) and (optical near3 signal) same (digital near3 interface near2 receiver)	US-PGPUB; USPAT; USOCR; FPRS; EPO; JPO; DERWENT; IBM_TDB	OR	ON	2012/12/11 20:21

12/12/2012 2:27:20 AM
C:\Users\stang\Documents\EAST\Workspaces\12565909.wsp

Index of Claims	Application/Control No.	Applicant(s)/Patent Under Reexamination
	12565909	YOON ET AL.
	Examiner	**Art Unit**
	SON M TANG	2681

✓	Rejected	-	Cancelled	N	Non-Elected	A	Appeal
=	Allowed	÷	Restricted	I	Interference	O	Objected

☐ Claims renumbered in the same order as presented by applicant ☐ CPA ☐ T.D. ☐ R.1.47

CLAIM		DATE								
Final	Original	12/05/2011	06/05/2012	12/12/2012						
	1	✓	✓	✓						
	2	✓	✓	✓						
	3	✓	✓	✓						
	4	✓	✓	✓						
	5	✓	-	-						
	6	✓	-	-						
	7	✓	✓	✓						
	8	✓	✓	✓						
	9	✓	✓	✓						
	10	✓	✓	✓						
	11	✓	✓	✓						
	12	✓	✓	✓						
	13	✓	✓	✓						
	14	✓	✓	✓						
	15	✓	✓	✓						
	16	✓	✓	✓						
	17	✓	✓	✓						
	18	✓	-	-						
	19	✓	✓	✓						
	20	✓	✓	✓						
	21	✓	✓	✓						
	22	✓	✓	✓						
	23	✓	✓	✓						
	24	✓	✓	✓						
	25	✓	✓	✓						
	26	✓	✓	✓						
	27	✓	✓	✓						
	28	✓	✓	✓						
	29	✓	✓	✓						
	30	✓	✓	✓						
	31	✓	✓	✓						
	32	✓	✓	✓						
	33	✓	✓	✓						
	34	✓	✓	✓						

PTO/SB/30EFS (08/06)
Approved for use through 08/31/2006. OMB 0651-0031
U.S. Patent and Trademark Office; U.S. DEPARTMENT OF COMMERCE
Under the Paperwork Reduction Act of 1995, no persons are required to respond to a collection of information unless it contains a valid OMB control number.

REQUEST FOR CONTINUED EXAMINATION(RCE)TRANSMITTAL
(Submitted Only via EFS-Web)

Application Number	12565909	Filing Date	2009-09-24	Docket Number (if applicable)	103-1339	Art Unit	2612
First Named Inventor	Jong Taek YOON			Examiner Name	Son M. Tang		

This is a Request for Continued Examination (RCE) under 37 CFR 1.114 of the above-identified application.
Request for Continued Examination (RCE) practice under 37 CFR 1.114 does not apply to any utility or plant application filed prior to June 8, 1995, or to any design application. The Instruction Sheet for this form is located at WWW.USPTO.GOV

SUBMISSION REQUIRED UNDER 37 CFR 1.114

Note: If the RCE is proper, any previously filed unentered amendments and amendments enclosed with the RCE will be entered in the order in which they were filed unless applicant instructs otherwise. If applicant does not wish to have any previously filed unentered amendment(s) entered, applicant must request non-entry of such amendment(s).

☒ Previously submitted. If a final Office action is outstanding, any amendments filed after the final Office action may be considered as a submission even if this box is not checked.

☐ Consider the arguments in the Appeal Brief or Reply Brief previously filed on _____

☒ Other Amendment Filed After Final on August 17, 2012

☒ Enclosed

☐ Amendment/Reply

☒ Information Disclosure Statement (IDS)

☐ Affidavit(s)/ Declaration(s)

☐ Other _____

MISCELLANEOUS

☐ Suspension of action on the above-identified application is requested under 37 CFR 1.103(c) for a period of months _____
(Period of suspension shall not exceed 3 months; Fee under 37 CFR 1.17(i) required)

☐ Other _____

FEES

The RCE fee under 37 CFR 1.17(e) is required by 37 CFR 1.114 when the RCE is filed.

☒ The Director is hereby authorized to charge any underpayment of fees, or credit any overpayments, to Deposit Account No 502827

SIGNATURE OF APPLICANT, ATTORNEY, OR AGENT REQUIRED

☒ Patent Practitioner Signature

☐ Applicant Signature

Signature of Registered U.S. Patent Practitioner			
Signature	/Darleen J. Stockley/	Date (YYYY-MM-DD)	2012-10-19
Name	Darleen J. Stockley	Registration Number	34257

This collection of information is required by 37 CFR 1.114. The information is required to obtain or retain a benefit by the public which is to file (and by the USPTO to process) an application. Confidentiality is governed by 35 U.S.C. 122 and 37 CFR 1.11 and 1.14. This collection is estimated to take 12 minutes to complete, including gathering, preparing, and submitting the completed application form to the USPTO. Time will vary depending upon the individual case. Any comments on the amount of time you require to complete this form and/or suggestions for reducing this burden, should be sent to the Chief Information Officer, U.S. Patent and Trademark Office, U.S. Department of Commerce, P.O. Box 1450, Alexandria, VA 22313-1450.

If you need assistance in completing the form, call 1-800-PTO-9199 and select option 2.

Privacy Act Statement

The Privacy Act of 1974 (P.L. 93-579) requires that you be given certain information in connection with your submission of the attached form related to a patent application or patent. Accordingly, pursuant to the requirements of the Act, please be advised that: (1) the general authority for the collection of this information is 35 U.S.C. 2(b)(2); (2) furnishing of the information solicited is voluntary; and (3) the principal purpose for which the information is used by the U.S. Patent and Trademark Office is to process and/or examine your submission related to a patent application or patent. If you do not furnish the requested information, the U.S. Patent and Trademark Office may not be able to process and/or examine your submission, which may result in termination of proceedings or abandonment of the application or expiration of the patent.

The information provided by you in this form will be subject to the following routine uses:

1. The information on this form will be treated confidentially to the extent allowed under the Freedom of Information Act (5 U.S.C. 552) and the Privacy Act (5 U.S.C. 552a). Records from this system of records may be disclosed to the Department of Justice to determine whether the Freedom of Information Act requires disclosure of these record s.

2. A record from this system of records may be disclosed, as a routine use, in the course of presenting evidence to a court, magistrate, or administrative tribunal, including disclosures to opposing counsel in the course of settlement negotiations.

3. A record in this system of records may be disclosed, as a routine use, to a Member of Congress submitting a request involving an individual, to whom the record pertains, when the individual has requested assistance from the Member with respect to the subject matter of the record.

4. A record in this system of records may be disclosed, as a routine use, to a contractor of the Agency having need for the information in order to perform a contract. Recipients of information shall be required to comply with the requirements of the Privacy Act of 1974, as amended, pursuant to 5 U.S.C. 552a(m).

5. A record related to an International Application filed under the Patent Cooperation Treaty in this system of records may be disclosed, as a routine use, to the International Bureau of the World Intellectual Property Organization, pursuant to the Patent Cooperation Treaty.

6. A record in this system of records may be disclosed, as a routine use, to another federal agency for purposes of National Security review (35 U.S.C. 181) and for review pursuant to the Atomic Energy Act (42 U.S.C. 218(c)).

7. A record from this system of records may be disclosed, as a routine use, to the Administrator, General Services, or his/her designee, during an inspection of records conducted by GSA as part of that agency's responsibility to recommend improvements in records management practices and programs, under authority of 44 U.S.C. 2904 and 2906. Such disclosure shall be made in accordance with the GSA regulations governing inspection of records for this purpose, and any other relevant (i.e., GSA or Commerce) directive. Such disclosure shall not be used to make determinations about individuals.

8. A record from this system of records may be disclosed, as a routine use, to the public after either publication of the application pursuant to 35 U.S.C. 122(b) or issuance of a patent pursuant to 35 U.S.C. 151. Further, a record may be disclosed, subject to the limitations of 37 CFR 1.14, as a routine use, to the public if the record was filed in an application which became abandoned or in which the proceedings were terminated and which application is referenced by either a published application, an application open to public inspections or an issued patent.

9. A record from this system of records may be disclosed, as a routine use, to a Federal, State, or local law enforcement agency, if the USPTO becomes aware of a violation or potential violation of law or regulation.

PTO/SB/08a (01-10)
Approved for use through 07/31/2012. OMB 0651-0031
U.S. Patent and Trademark Office; U.S. DEPARTMENT OF COMMERCE

Under the Paperwork Reduction Act of 1995, no persons are required to respond to a collection of information unless it contains a valid OMB control number.

INFORMATION DISCLOSURE STATEMENT BY APPLICANT

(Not for submission under 37 CFR 1.99)

Application Number	12565909
Filing Date	2009-09-24
First Named Inventor	Jong Taek YOON
Art Unit	1417
Examiner Name	Son M. Tang
Attorney Docket Number	103-1339

U.S.PATENTS Remove

Examiner Initial*	Cite No	Patent Number	Kind Code[1]	Issue Date	Name of Patentee or Applicant of cited Document	Pages,Columns,Lines where Relevant Passages or Relevant Figures Appear
	1	6690431		2004-02-10	YANG et al.	

If you wish to add additional U.S. Patent citation information please click the Add button. Add

U.S.PATENT APPLICATION PUBLICATIONS Remove

Examiner Initial*	Cite No	Publication Number	Kind Code[1]	Publication Date	Name of Patentee or Applicant of cited Document	Pages,Columns,Lines where Relevant Passages or Relevant Figures Appear
	1					

If you wish to add additional U.S. Published Application citation information please click the Add button. Add

FOREIGN PATENT DOCUMENTS Remove

Examiner Initial*	Cite No	Foreign Document Number[3]	Country Code[2] ¡	Kind Code[4]	Publication Date	Name of Patentee or Applicant of cited Document	Pages,Columns,Lines where Relevant Passages or Relevant Figures Appear	T[5]
	1							☐

If you wish to add additional Foreign Patent Document citation information please click the Add button Add

NON-PATENT LITERATURE DOCUMENTS Remove

Examiner Initials*	Cite No	Include name of the author (in CAPITAL LETTERS), title of the article (when appropriate), title of the item (book, magazine, journal, serial, symposium, catalog, etc), date, pages(s), volume-issue number(s), publisher, city and/or country where published.	T[5]

INFORMATION DISCLOSURE STATEMENT BY APPLICANT (Not for submission under 37 CFR 1.99)		
	Application Number	12565909
	Filing Date	2009-09-24
	First Named Inventor	Jong Taek YOON
	Art Unit	1417
	Examiner Name	Son M. Tang
	Attorney Docket Number	103-1339

	1	Korean Office Action Issued on September 18, 2012 in KR Patent Application No. 200910210341.0	☐

If you wish to add additional non-patent literature document citation information please click the Add button Add

EXAMINER SIGNATURE

Examiner Signature		Date Considered	

*EXAMINER: Initial if reference considered, whether or not citation is in conformance with MPEP 609. Draw line through a citation if not in conformance and not considered. Include copy of this form with next communication to applicant.

[1] See Kind Codes of USPTO Patent Documents at www.USPTO.GOV or MPEP 901.04. [2] Enter office that issued the document, by the two-letter code (WIPO Standard ST.3). [3] For Japanese patent documents, the indication of the year of the reign of the Emperor must precede the serial number of the patent document. [4] Kind of document by the appropriate symbols as indicated on the document under WIPO Standard ST.16 if possible. [5] Applicant is to place a check mark here if English language translation is attached.

INFORMATION DISCLOSURE STATEMENT BY APPLICANT (Not for submission under 37 CFR 1.99)		
	Application Number	12565909
	Filing Date	2009-09-24
	First Named Inventor	Jong Taek YOON
	Art Unit	1417
	Examiner Name	Son M. Tang
	Attorney Docket Number	103-1339

CERTIFICATION STATEMENT

Please see 37 CFR 1.97 and 1.98 to make the appropriate selection(s):

☐ That each item of information contained in the information disclosure statement was first cited in any communication from a foreign patent office in a counterpart foreign application not more than three months prior to the filing of the information disclosure statement. See 37 CFR 1.97(e)(1).

OR

☐ That no item of information contained in the information disclosure statement was cited in a communication from a foreign patent office in a counterpart foreign application, and, to the knowledge of the person signing the certification after making reasonable inquiry, no item of information contained in the information disclosure statement was known to any individual designated in 37 CFR 1.56(c) more than three months prior to the filing of the information disclosure statement. See 37 CFR 1.97(e)(2).

☐ See attached certification statement.

☐ Fee set forth in 37 CFR 1.17 (p) has been submitted herewith.

☒ None

SIGNATURE

A signature of the applicant or representative is required in accordance with CFR 1.33, 10.18. Please see CFR 1.4(d) for the form of the signature.

Signature	/Patrick J. Stanzione/	Date (YYYY-MM-DD)	2012-10-19
Name/Print	Patrick J. Stanzione	Registration Number	40,434

This collection of information is required by 37 CFR 1.97 and 1.98. The information is required to obtain or retain a benefit by the public which is to file (and by the USPTO to process) an application. Confidentiality is governed by 35 U.S.C. 122 and 37 CFR 1.14. This collection is estimated to take 1 hour to complete, including gathering, preparing and submitting the completed application form to the USPTO. Time will vary depending upon the individual case. Any comments on the amount of time you require to complete this form and/or suggestions for reducing this burden, should be sent to the Chief Information Officer, U.S. Patent and Trademark Office, U.S. Department of Commerce, P.O. Box 1450, Alexandria, VA 22313-1450. DO NOT SEND FEES OR COMPLETED FORMS TO THIS ADDRESS. **SEND TO: Commissioner for Patents, P.O. Box 1450, Alexandria, VA 22313-1450.**

Privacy Act Statement

The Privacy Act of 1974 (P.L. 93-579) requires that you be given certain information in connection with your submission of the attached form related to a patent application or patent. Accordingly, pursuant to the requirements of the Act, please be advised that: (1) the general authority for the collection of this information is 35 U.S.C. 2(b)(2); (2) furnishing of the information solicited is voluntary; and (3) the principal purpose for which the information is used by the U.S. Patent and Trademark Office is to process and/or examine your submission related to a patent application or patent. If you do not furnish the requested information, the U.S. Patent and Trademark Office may not be able to process and/or examine your submission, which may result in termination of proceedings or abandonment of the application or expiration of the patent.

The information provided by you in this form will be subject to the following routine uses:

1. The information on this form will be treated confidentially to the extent allowed under the Freedom of Information Act (5 U.S.C. 552) and the Privacy Act (5 U.S.C. 552a). Records from this system of records may be disclosed to the Department of Justice to determine whether the Freedom of Information Act requires disclosure of these record s.

2. A record from this system of records may be disclosed, as a routine use, in the course of presenting evidence to a court, magistrate, or administrative tribunal, including disclosures to opposing counsel in the course of settlement negotiations.

3. A record in this system of records may be disclosed, as a routine use, to a Member of Congress submitting a request involving an individual, to whom the record pertains, when the individual has requested assistance from the Member with respect to the subject matter of the record.

4. A record in this system of records may be disclosed, as a routine use, to a contractor of the Agency having need for the information in order to perform a contract. Recipients of information shall be required to comply with the requirements of the Privacy Act of 1974, as amended, pursuant to 5 U.S.C. 552a(m).

5. A record related to an International Application filed under the Patent Cooperation Treaty in this system of records may be disclosed, as a routine use, to the International Bureau of the World Intellectual Property Organization, pursuant to the Patent Cooperation Treaty.

6. A record in this system of records may be disclosed, as a routine use, to another federal agency for purposes of National Security review (35 U.S.C. 181) and for review pursuant to the Atomic Energy Act (42 U.S.C. 218(c)).

7. A record from this system of records may be disclosed, as a routine use, to the Administrator, General Services, or his/her designee, during an inspection of records conducted by GSA as part of that agency's responsibility to recommend improvements in records management practices and programs, under authority of 44 U.S.C. 2904 and 2906. Such disclosure shall be made in accordance with the GSA regulations governing inspection of records for this purpose, and any other relevant (i.e., GSA or Commerce) directive. Such disclosure shall not be used to make determinations about individuals.

8. A record from this system of records may be disclosed, as a routine use, to the public after either publication of the application pursuant to 35 U.S.C. 122(b) or issuance of a patent pursuant to 35 U.S.C. 151. Further, a record may be disclosed, subject to the limitations of 37 CFR 1.14, as a routine use, to the public if the record was filed in an application which became abandoned or in which the proceedings were terminated and which application is referenced by either a published application, an application open to public inspections or an issued patent.

9. A record from this system of records may be disclosed, as a routine use, to a Federal, State, or local law enforcement agency, if the USPTO becomes aware of a violation or potential violation of law or regulation.

Electronic Patent Application Fee Transmittal

Application Number:	12565909
Filing Date:	24-Sep-2009
Title of Invention:	AUDIO DEVICE, AV SYSTEM HAVING THE AUDIO DEVICE, AND METHOD TO CONTROL THE AUDIO DEVICE
First Named Inventor/Applicant Name:	Jong Taek YOON
Filer:	Patrick J. Stanzione/LaToyia Oliver
Attorney Docket Number:	103-1339

Filed as Large Entity

Utility under 35 USC 111(a) Filing Fees

Description	Fee Code	Quantity	Amount	Sub-Total in USD($)
Basic Filing:				
Pages:				
Claims:				
Miscellaneous-Filing:				
Petition:				
Patent-Appeals-and-Interference:				
Post-Allowance-and-Post-Issuance:				
Extension-of-Time:				
Extension - 1 month with $0 paid	1251	1	150	150

Description	Fee Code	Quantity	Amount	Sub-Total in USD($)
Miscellaneous:				
Request for continued examination	1801	1	930	930
		Total in USD ($)		**1080**

Electronic Acknowledgement Receipt

EFS ID:	14026664
Application Number:	12565909
International Application Number:	
Confirmation Number:	1417
Title of Invention:	AUDIO DEVICE, AV SYSTEM HAVING THE AUDIO DEVICE, AND METHOD TO CONTROL THE AUDIO DEVICE
First Named Inventor/Applicant Name:	Jong Taek YOON
Customer Number:	38209
Filer:	Patrick J. Stanzione/LaToyia Oliver
Filer Authorized By:	Patrick J. Stanzione
Attorney Docket Number:	103-1339
Receipt Date:	19-OCT-2012
Filing Date:	24-SEP-2009
Time Stamp:	12:52:08
Application Type:	Utility under 35 USC 111(a)

Payment information:

Submitted with Payment	no

File Listing:

Document Number	Document Description	File Name	File Size(Bytes)/ Message Digest	Multi Part /.zip	Pages (if appl.)
1	Request for Continued Examination (RCE)	RCE_TransmittalElectronic.pdf	575303 3364db8975517ae8121a18d0dbef1a53ca645cbb	no	3

Warnings:

Information:

2	Non Patent Literature	KR_OA.pdf	651388 0e83ba60e3cc0810583de93857542e6fe0ebf94f	no	7
Warnings:					
Information:					
3	Information Disclosure Statement (IDS) Form (SB08)	US_IDS_Form_SB_08a1.pdf	612209 688bae10050bb677dc751191346754c558b0bde6	no	4
Warnings:					
Information:					
4	Fee Worksheet (SB06)	fee-info.pdf	32634 0e12b7998b467f67672f7070b366717b27342657	no	2
Warnings:					
Information:					
			Total Files Size (in bytes):	1871534	

This Acknowledgement Receipt evidences receipt on the noted date by the USPTO of the indicated documents, characterized by the applicant, and including page counts, where applicable. It serves as evidence of receipt similar to a Post Card, as described in MPEP 503.

<u>New Applications Under 35 U.S.C. 111</u>
If a new application is being filed and the application includes the necessary components for a filing date (see 37 CFR 1.53(b)-(d) and MPEP 506), a Filing Receipt (37 CFR 1.54) will be issued in due course and the date shown on this Acknowledgement Receipt will establish the filing date of the application.

<u>National Stage of an International Application under 35 U.S.C. 371</u>
If a timely submission to enter the national stage of an international application is compliant with the conditions of 35 U.S.C. 371 and other applicable requirements a Form PCT/DO/EO/903 indicating acceptance of the application as a national stage submission under 35 U.S.C. 371 will be issued in addition to the Filing Receipt, in due course.

<u>New International Application Filed with the USPTO as a Receiving Office</u>
If a new international application is being filed and the international application includes the necessary components for an international filing date (see PCT Article 11 and MPEP 1810), a Notification of the International Application Number and of the International Filing Date (Form PCT/RO/105) will be issued in due course, subject to prescriptions concerning national security, and the date shown on this Acknowledgement Receipt will establish the international filing date of the application.

Electronic Patent Application Fee Transmittal

Application Number:	12565909
Filing Date:	24-Sep-2009
Title of Invention:	AUDIO DEVICE, AV SYSTEM HAVING THE AUDIO DEVICE, AND METHOD TO CONTROL THE AUDIO DEVICE
First Named Inventor/Applicant Name:	Jong Taek YOON
Filer:	Patrick J. Stanzione
Attorney Docket Number:	103-1339

Filed as Large Entity

Utility under 35 USC 111(a) Filing Fees

Description	Fee Code	Quantity	Amount	Sub-Total in USD($)
Basic Filing:				
Pages:				
Claims:				
Miscellaneous-Filing:				
Petition:				
Patent-Appeals-and-Interference:				
Post-Allowance-and-Post-Issuance:				
Extension-of-Time:				
Extension - 1 month with $0 paid	1251	1	150	150

Description	Fee Code	Quantity	Amount	Sub-Total in USD($)
Miscellaneous:				
			Total in USD ($)	**150**

Electronic Acknowledgement Receipt

EFS ID:	14030876
Application Number:	12565909
International Application Number:	
Confirmation Number:	1417
Title of Invention:	AUDIO DEVICE, AV SYSTEM HAVING THE AUDIO DEVICE, AND METHOD TO CONTROL THE AUDIO DEVICE
First Named Inventor/Applicant Name:	Jong Taek YOON
Customer Number:	38209
Filer:	Patrick J. Stanzione
Filer Authorized By:	
Attorney Docket Number:	103-1339
Receipt Date:	19-OCT-2012
Filing Date:	24-SEP-2009
Time Stamp:	15:27:00
Application Type:	Utility under 35 USC 111(a)

Payment information:

Submitted with Payment	no

File Listing:

Document Number	Document Description	File Name	File Size(Bytes)/ Message Digest	Multi Part /.zip	Pages (if appl.)
1	Fee Worksheet (SB06)	fee-info.pdf	30408 5bd5bbbd9ec05848ae3ea551da286ac13cbc717f	no	2

Warnings:

Information:

Total Files Size (in bytes):	30408

This Acknowledgement Receipt evidences receipt on the noted date by the USPTO of the indicated documents, characterized by the applicant, and including page counts, where applicable. It serves as evidence of receipt similar to a Post Card, as described in MPEP 503.

New Applications Under 35 U.S.C. 111

If a new application is being filed and the application includes the necessary components for a filing date (see 37 CFR 1.53(b)-(d) and MPEP 506), a Filing Receipt (37 CFR 1.54) will be issued in due course and the date shown on this Acknowledgement Receipt will establish the filing date of the application.

National Stage of an International Application under 35 U.S.C. 371

If a timely submission to enter the national stage of an international application is compliant with the conditions of 35 U.S.C. 371 and other applicable requirements a Form PCT/DO/EO/903 indicating acceptance of the application as a national stage submission under 35 U.S.C. 371 will be issued in addition to the Filing Receipt, in due course.

New International Application Filed with the USPTO as a Receiving Office

If a new international application is being filed and the international application includes the necessary components for an international filing date (see PCT Article 11 and MPEP 1810), a Notification of the International Application Number and of the International Filing Date (Form PCT/RO/105) will be issued in due course, subject to prescriptions concerning national security, and the date shown on this Acknowledgement Receipt will establish the international filing date of the application.

Electronic Patent Application Fee Transmittal

Application Number:	12565909
Filing Date:	24-Sep-2009
Title of Invention:	AUDIO DEVICE, AV SYSTEM HAVING THE AUDIO DEVICE, AND METHOD TO CONTROL THE AUDIO DEVICE
First Named Inventor/Applicant Name:	Jong Taek YOON
Filer:	Patrick J. Stanzione
Attorney Docket Number:	103-1339

Filed as Large Entity

Utility under 35 USC 111(a) Filing Fees

Description	Fee Code	Quantity	Amount	Sub-Total in USD($)
Basic Filing:				
Pages:				
Claims:				
Miscellaneous-Filing:				
Petition:				
Patent-Appeals-and-Interference:				
Post-Allowance-and-Post-Issuance:				
Extension-of-Time:				
Extension - 1 month with $0 paid	1251	1	150	150

Description	Fee Code	Quantity	Amount	Sub-Total in USD($)
Miscellaneous:				
Request for continued examination	1801	1	930	930
		Total in USD ($)		**1080**

Electronic Acknowledgement Receipt

EFS ID:	14030925
Application Number:	12565909
International Application Number:	
Confirmation Number:	1417
Title of Invention:	AUDIO DEVICE, AV SYSTEM HAVING THE AUDIO DEVICE, AND METHOD TO CONTROL THE AUDIO DEVICE
First Named Inventor/Applicant Name:	Jong Taek YOON
Customer Number:	38209
Filer:	Patrick J. Stanzione
Filer Authorized By:	
Attorney Docket Number:	103-1339
Receipt Date:	19-OCT-2012
Filing Date:	24-SEP-2009
Time Stamp:	15:28:43
Application Type:	Utility under 35 USC 111(a)

Payment information:

Submitted with Payment	yes
Payment Type	Credit Card
Payment was successfully received in RAM	$1080
RAM confirmation Number	2070
Deposit Account	502827
Authorized User	STANZIONE, PATRICK

The Director of the USPTO is hereby authorized to charge indicated fees and credit any overpayment as follows:

Charge any Additional Fees required under 37 C.F.R. Section 1.16 (National application filing, search, and examination fees)

Charge any Additional Fees required under 37 C.F.R. Section 1.17 (Patent application and reexamination processing fees)

Charge any Additional Fees required under 37 C.F.R. Section 1.19 (Document supply fees)

Charge any Additional Fees required under 37 C.F.R. Section 1.20 (Post Issuance fees)

Charge any Additional Fees required under 37 C.F.R. Section 1.21 (Miscellaneous fees and charges)

File Listing:

Document Number	Document Description	File Name	File Size(Bytes)/ Message Digest	Multi Part /.zip	Pages (if appl.)
1	Fee Worksheet (SB06)	fee-info.pdf	32529 fdafb6119ae584138d58cc7713e8f93508f99a3d	no	2

Warnings:

Information:

Total Files Size (in bytes):	32529

This Acknowledgement Receipt evidences receipt on the noted date by the USPTO of the indicated documents, characterized by the applicant, and including page counts, where applicable. It serves as evidence of receipt similar to a Post Card, as described in MPEP 503.

<u>New Applications Under 35 U.S.C. 111</u>
If a new application is being filed and the application includes the necessary components for a filing date (see 37 CFR 1.53(b)-(d) and MPEP 506), a Filing Receipt (37 CFR 1.54) will be issued in due course and the date shown on this Acknowledgement Receipt will establish the filing date of the application.

<u>National Stage of an International Application under 35 U.S.C. 371</u>
If a timely submission to enter the national stage of an international application is compliant with the conditions of 35 U.S.C. 371 and other applicable requirements a Form PCT/DO/EO/903 indicating acceptance of the application as a national stage submission under 35 U.S.C. 371 will be issued in addition to the Filing Receipt, in due course.

<u>New International Application Filed with the USPTO as a Receiving Office</u>
If a new international application is being filed and the international application includes the necessary components for an international filing date (see PCT Article 11 and MPEP 1810), a Notification of the International Application Number and of the International Filing Date (Form PCT/RO/105) will be issued in due course, subject to prescriptions concerning national security, and the date shown on this Acknowledgement Receipt will establish the international filing date of the application.

UNITED STATES PATENT AND TRADEMARK OFFICE

UNITED STATES DEPARTMENT OF COMMERCE
United States Patent and Trademark Office
Address: COMMISSIONER FOR PATENTS
P.O. Box 1450
Alexandria, Virginia 22313-1450
www.uspto.gov

APPLICATION NO.	FILING DATE	FIRST NAMED INVENTOR	ATTORNEY DOCKET NO.	CONFIRMATION NO.
12/565,909	09/24/2009	Jong Taek YOON	103-1339	1417

38209 7590 09/26/2012
Stanzione & Kim, LLP
919 18th Street, NW
Suite 440
Washington, DC 20006

EXAMINER
TANG, SON M

ART UNIT	PAPER NUMBER
2612	

MAIL DATE	DELIVERY MODE
09/26/2012	PAPER

Please find below and/or attached an Office communication concerning this application or proceeding.

The time period for reply, if any, is set in the attached communication.

Advisory Action Before the Filing of an Appeal Brief	**Application No.** *12/565,909*	**Applicant(s)** YOON ET AL.
	Examiner SON M. TANG	**Art Unit** 2612

--The MAILING DATE of this communication appears on the cover sheet with the correspondence address --

THE REPLY FILED 17 August 2012 FAILS TO PLACE THIS APPLICATION IN CONDITION FOR ALLOWANCE.

NO NOTICE OF APPEAL FILED

1. ☒ The reply was filed after a final rejection. No Notice of Appeal has been filed. To avoid abandonment of this application, applicant must timely file one of the following replies: (1) an amendment, affidavit, or other evidence, which places the application in condition for allowance;

(2) a Notice of Appeal (with appeal fee) in compliance with 37 CFR 41.31; or (3) a Request for Continued Examination (RCE) in compliance with 37 CFR 1.114 if this is a utility or plant application. Note that RCEs are not permitted in design applications. The reply must be filed within one of the following time periods:

a) ☐ The period for reply expires _____months from the mailing date of the final rejection.

b) ☒ The period for reply expires on: (1) the mailing date of this Advisory Action; or (2) the date set forth in the final rejection, whichever is later. In no event, however, will the statutory period for reply expire later than SIX MONTHS from the mailing date of the final rejection.

c) ☐ A prior Advisory Action was mailed more than 3 months after the mailing date of the final rejection in response to a first after-final reply filed within 2 months of the mailing date of the final rejection. The current period for reply expires months from the mailing date of *the prior Advisory Action* or SIX MONTHS from the mailing date of the final rejection, whichever is earlier.

Examiner Note: If box 1 is checked, check either box (a), (b) or (c). ONLY CHECK BOX (b) WHEN THIS ADVISORY ACTION IS THE FIRST RESPONSE TO APPLICANT'S FIRST AFTER-FINAL REPLY WHICH WAS FILED WITHIN TWO MONTHS OF THE FINAL REJECTION. ONLY CHECK BOX (c) IN THE LIMITED SITUATION SET FORTH UNDER BOX (c). See MPEP 706.07(f).

Extensions of time may be obtained under 37 CFR 1.136(a). The date on which the petition under 37 CFR 1.136(a) and the appropriate extension fee have been filed is the date for purposes of determining the period of extension and the corresponding amount of the fee. The appropriate extension fee under 37 CFR 1.17(a) is calculated from: (1) the expiration date of the shortened statutory period for reply originally set in the final Office action; or (2) as set forth in (b) or (c) above, if checked. Any reply received by the Office later than three months after the mailing date of the final rejection, even if timely filed, may reduce any earned patent term adjustment. See 37 CFR 1.704(b).

NOTICE OF APPEAL

2. ☐ The Notice of Appeal was filed on _____. A brief in compliance with 37 CFR 41.37 must be filed within two months of the date of filing the Notice of Appeal (37 CFR 41.37(a)), or any extension thereof (37 CFR 41.37(e)), to avoid dismissal of the appeal. Since a Notice of Appeal has been filed, any reply must be filed within the time period set forth in 37 CFR 41.37(a).

AMENDMENTS

3. ☒ The proposed amendments filed after a final rejection, but prior to the date of filing a brief, will not be entered because

a) ☐ They raise new issues that would require further consideration and/or search (see NOTE below);

b) ☒ They raise the issue of new matter (see NOTE below);

c) ☐ They are not deemed to place the application in better form for appeal by materially reducing or simplifying the issues for appeal; and/or

d) ☐ They present additional claims without canceling a corresponding number of finally rejected claims.

NOTE: *See Continuation Sheet*. (See 37 CFR 1.116 and 41.33(a)).

4. ☐ The amendments are not in compliance with 37 CFR 1.121. See attached Notice of Non-Compliant Amendment (PTOL-324).

5. ☐ Applicant's reply has overcome the following rejection(s): _____.

6. ☐ Newly proposed or amended claim(s) _____ would be allowable if submitted in a separate, timely filed amendment canceling the non-allowable claim(s).

7. ☒ For purposes of appeal, the proposed amendment(s): (a) ☒ will not be entered, or (b) ☐ will be entered, and an explanation of how the new or amended claims would be rejected is provided below or appended.

AFFIDAVIT OR OTHER EVIDENCE

8. ☐ The affidavit or other evidence filed after final action, but before or on the date of filing a Notice of Appeal will not be entered because applicant failed to provide a showing of good and sufficient reasons why the affidavit or other evidence is necessary and was not earlier presented. See 37 CFR 1.116(e).

9. ☐ The affidavit or other evidence filed after the date of filing the Notice of Appeal, but prior to the date of filing a brief, will not be entered because the affidavit or other evidence failed to overcome all rejections under appeal and/or appellant fails to provide a showing of good and sufficient reasons why it is necessary and was not earlier presented. See 37 CFR 41.33(d)(1).

10. ☐ The affidavit or other evidence is entered. An explanation of the status of the claims after entry is below or attached.

REQUEST FOR RECONSIDERATION/OTHER

11. ☐ The request for reconsideration has been considered but does NOT place the application in condition for allowance because: _____.

12. ☐ Note the attached Information *Disclosure Statement*(s). (PTO/SB/08) Paper No(s). _____

13. ☐ Other: _____.

STATUS OF CLAIMS

14. The status of the claim(s) is (or will be) as follows:

Claim(s) allowed: .

Claim(s) objected to: .

Claim(s) rejected: 1-5,8-17 and 19-34.

Claim(s) withdrawn from consideration: .

/DANIEL WU/ Supervisory Patent Examiner, Art Unit 2612	

Continuation of 3. NOTE: The new added limitations in claims 1, 8, 13, 19, and 27 such as, "a Digital interface Receiver (DIR) associated with a digital signal processor (DSP) functioning, which never claimed in any previous actions, thus, it is consisdered as a new matter in the claims.

Do not enter
this After
Final.
/ST/
9-24-2012

Docket No. 103-1339

IN THE UNITED STATES PATENT AND TRADEMARK OFFICE

In re Patent Application of:

Jong Taek YOON et al.

Application No.:	12/565,909	Group Art Unit:	2612
Filed:	September 24, 2009	Examiner	Son M. Tang
Customer No.:	38209	Confirmation No.	1417

For: AUDIO DEVICE, AV SYSTEM HAVING THE AUDIO DEVICE, AND METHOD to CONTROL THE AUDIO DEVICE

BOX AF
Commissioner of Patents and Trademarks
P.O. Box 1450
Alexandria, VA 22313-1450

AMENDMENT AFTER FINAL REJECTION

Sir:

In response to the Final Office Action mailed June 19, 2012, please amend the above-identified application as follows:

Amendments to the Claims are reflected in the listing of claims which begins on page 2 of this paper.

Remarks begin on page 10 of this paper.

Docket No. 103-1339

IN THE UNITED STATES PATENT AND TRADEMARK OFFICE

In re Patent Application of:

Jong Taek YOON et al.

Application No.:	12/565,909	Group Art Unit:	2612
Filed:	September 24, 2009	Examiner	Son M. Tang
Customer No.:	38209	Confirmation No.	1417

For: AUDIO DEVICE, AV SYSTEM HAVING THE AUDIO DEVICE, AND METHOD to CONTROL THE AUDIO DEVICE

BOX AF
Commissioner of Patents and Trademarks
P.O. Box 1450
Alexandria, VA 22313-1450

AMENDMENT AFTER FINAL REJECTION

Sir:

In response to the Final Office Action mailed June 19, 2012, please amend the above-identified application as follows:

Amendments to the Claims are reflected in the listing of claims which begins on page 2 of this paper.

Remarks begin on page 10 of this paper.

Amendments to the Claims

The listing of claims will replace all prior versions, and listings, of claims in the application:

Listing of Claims:

1. (Currently Amended) An audio device comprising:

a receiver connected to a transmitter of an external device to receive ~~a~~ an optical signal from the external device;

a coupled power control grouping ~~a switch to turn on in response to the received signal; anda microcomputer~~ to control a power ~~supply~~ supplied to the audio device and to control an audio output signal with the optical signal from the receiver, upon receipt of ~~an~~ a switched on-signal; ~~from the switch~~

a Digital Interface Receiver (DIR) to determine a sampling frequency of the optical signal from the receiver so as to provide a digital optical signal to a digital signal processor (DSP) according to the optical signal; and

the DSP to digitally process the digital optical signal received from the DIR and to generate the audio output signal.

2. (Original) The audio device according to claim 1, wherein the receiver includes an optical port.

3. (Currently Amended) The audio device according to claim 1, wherein the optical signal ~~is an optical signal including~~includes a clock signal and an audio signal.

4. (Currently Amended) The audio device according to claim 1, ~~further comprising~~wherein the coupled power control grouping includes a filter to cancel noise from the optical signal.

5. (Currently Amended) The audio device according to claim 4, wherein the coupled power control grouping further ~~comprising~~ comprises a rectifier to rectify the noise-

cancelled optical signal.

6. (Cancelled)

7. (Cancelled)

8. (Currently Amended) An Audio/Visual (AV) system comprising:

an external device having a transmitter to output a signal upon receipt of power; and

an audio device having:

a receiver to receive the signal~~,~~; and

a coupled power control grouping ~~a switch to turn on in response to the received signal, and a microcomputer~~ to control power supplied to the AV system and to control an audio output signal upon receipt of an on-signal ~~from the switch~~;

a Digital Interface Receiver (DIR) to determine a sampling frequency of the signal so as to provide a digital signal to a digital signal processor (DSP) according to the signal; and

the DSP to digitally process the digital signal received from the DIR and to generate the audio output signal.

9. (Original) The AV system according to claim 8, wherein each of the transmitter of the external device and the receiver of the audio device includes an optical port and the transmitter communicates with the receiver by optical communications.

10. (Original) The AV system according to claim 8, wherein the external device is a video device and/or an AV source device.

11. (Original) The AV system according to claim 8, wherein the audio device further includes one or more speakers to output audio signals of one or more channels, and an AV receiver and/or an amplifier.

12. (Currently Amended) The AV system according to claim 11, wherein the ~~audio~~

~~device~~ coupled power control grouping ~~further~~ includes a filter to cancel noise from the signal, and a rectifier to rectify the noise-cancelled signal and apply the rectified signal to ~~the~~ a switch in order to turn on the switch.

13. (Currently Amended) A method of controlling an audio device, the method comprising:

~~turning on a switch in response to a signal received from an external device;~~

~~and~~

receiving an optical signal at a receiver from a transmitter of an external device;

controlling, by a coupled power control grouping, power ~~supply~~ supplied to the audio device and an audio output signal of the audio device upon receipt of an on-signal from the receiver;

determining, by a Digital Interface Receiver (DIR), a sampling frequency of the optical signal and providing a digital optical signal to a digital signal processor (DSP) according to the optical signal; and

digitally processing, by the DSP, the digital optical signal received from the DIR and generating the audio output signal.

14. (Currently Amended) The method according to claim 13, wherein the optical signal is received from the external device in response to power being applied to the external device.

15. (Currently Amended) The method according to claim 14, wherein the optical signal is received by optical communications.

16. (Currently Amended) The method according to claim 15, wherein the optical signal ~~is an optical signal including~~includes a clock signal and an audio signal.

17. (Currently Amended) The method according to claim 13, wherein the controlling, by the coupled power control grouping, power supplied to the audio device and the audio

output signal further ~~comprising~~comprises:

canceling noise from the optical signal in response to the signal being received;

rectifying the noise-cancelled optical signal; and

turning on a switch based on the rectified optical signal.

18. (Cancelled)

19. (Currently Amended) A device comprising:

a receiver, connected to a transmitter of an external device, to receive a signal from an external source; ~~a switch to turn on in response to the received signal, and~~

a coupled power control grouping ~~controller~~ to control ~~an on/off state~~ power supplied to the device and to control an audio output signal of the device according to an ~~on/off~~on signal ~~received from the switch.~~;

a Digital Interface Receiver (DIR) to determine a sampling frequency of the signal so as to provide a digital signal to a digital signal processor (DSP) according to the signal; and

the DSP to digitally process the digital signal received from the DIR and to generate the audio output signal.

20. (Currently Amended) The device of claim 19, wherein the audio output signal of the device includes one or more audio signals.

21. (Original) The device of claim 19, wherein the received signal includes an audio component.

22. (Original) The device of claim 19, wherein the received signal is an optical signal.

23. (Original) The device of claim 19, wherein the receiver includes a connection port to connect to the external source.

24. (Original) The device of claim 23, wherein the receiver communicates with the external source through a wireless connection.

25. (Currently Amended) The device of claim 19, wherein the coupled power control grouping ~~the controller~~ includes a microcomputer ~~controls~~ to control the device to be turned on in response to receiving the signal.

26. (Currently Amended) The device of claim 19, wherein wherein the coupled power control grouping includes a ~~the controller~~ microcomputer ~~controls~~ to control the device to be turned off in response to termination of the received signal.

27. (Currently Amended) A method of controlling ~~a~~ an audio device, the method comprising:

~~turning on/off a switch according to a received signal; and~~

~~controlling an on/off state and an output of the device according to an on/off signal received from the switch.~~

providing, in response to a received signal and an on/off signal from a switch, a power supply to the audio device and an audio output signal;

determining, by a Digital Interface Receiver (DIR), a sampling frequency of the received signal so as to provide a digital signal to a digital signal processor (DSP) according to the signal; and

digitally processing, by the DSP, the digital signal received from the DIR and generating the audio output signal.

28. (Currently Amended) The method of claim 27, wherein the audio output signal of the device includes one or more audio signals.

29. (Original) The method of claim 27, wherein the received signal includes an audio component.

30. (Original) The method of claim 27, wherein the received signal is an optical signal.

31. (Original) The method of claim 27, further comprising:

receiving the received signal through a wired connection.

32. (Original) The method of claim 27, further comprising:

receiving the received signal through a wireless connection.

33. (Currently Amended) The method of claim 27, wherein ~~the controlling the on/off state of the device comprises:~~ the providing, in response to the received signal and the on/off signal from the switch, the power supply to the audio device and the audio output signal comprises:

turning the audio device on in response to receiving the ~~received signal~~ on-signal.

34. (Currently Amended) The method of claim 27, wherein ~~the controlling the on/off state of the device comprises:~~ the providing, in response to the received signal and the on/off signal from the switch, the power supply to the audio device and the audio output signal comprises:

turning the audio device off in response to termination of the received signal.

REMARKS

Introduction

Upon entry of the foregoing amendment, claims 1-5, 8-17, and 19-34 are pending in the application. Claims 1, 3-5, 8, 12-17, 19, 20, 25-28, 33, and 34 have been amended. The amendments are supported at least by paragraphs [0047]-[0064] and FIG. 1. Claims 6, 7 and 18 have been cancelled without prejudice or disclaimer. No new matter is being presented. In view of the following remarks, reconsideration and allowance of all the pending claims are requested.

Entry of this Amendment After Final is proper under 37 C.F.R. §1.116 because the claim amendments: (a) place this application in condition for allowance (for the reasons discussed herein), (b) do not raise any new issues requiring further search and/or consideration (since the amendments amplify issues previously discussed throughout prosecution as indicated in the Final Office Action), (c) present the rejected claims in better form for consideration on appeal (should an appeal be necessary), and (d) are necessary and were not earlier presented because they are made in response to arguments raised in the Final Office Action.

Accordingly, for at least the reasons discussed above, entry of this Amendment is respectfully requested.

Rejection under 35 USC § 103

Claims 1-5, 8-23, 25-31 and 33-34 are rejected under 35 USC 103 (a) as being unpatentable over Yang et al. (US 6,690,431; Yang) in view of Bergman et al. (US 2009/0225528; Bergman).

Independent claims 1, 8, 13, 19 and 27

Independent claim 1 presently recites: "An audio device comprising: a receiver connected to a transmitter of an external device to receive an optical signal from the external device; a coupled power control grouping to control a power supplied to the audio device and to

control an audio output signal with the optical signal from the receiver, upon receipt of a switched on-signal; a Digital Interface Receiver (DIR) to determine a sampling frequency of the optical signal from the receiver so as to provide a digital optical signal to a digital signal processor (DSP) according to the optical signal; and the DSP to digitally process the digital optical signal received from the DIR and to generate the audio output signal," which is supported at least by paragraphs [0047]-[0064] and FIG. 1 of the application. Independent claims 8, 13, 19, and 27 have been amended in similar fashion.

Yang utilizes a digital signal analyzer (702) to output a signal to a microprocessor to control a power supply (see col. 2, lines 43-52 of Yang). In particular, Yang describes three embodiments.

In Yang's first embodiment, illustrated in FIG. 2, "analog signals from the electronic switch 101 are also directly provided to the AV processing circuit 201 and the volume control circuit 202 and then are simplified for outputting" (col. 2, lines 57-60, Yang) to the speakers. That is, Yang sends the received analog signal directly to the AV processing circuit 201 and the volume control circuit for audio output, but converts the analog signal to digital to compare the value of the signal with a threshold to judge whether or not signals are being output from the sources (CD, VCD, DVD, etc.; see col. 3, lines 4-11, Yang) and determine whether to turn on the power supply. However, Yang does not describe a digital interface receiver to determine a sampling frequency of the optical signal to provide a digital optical signal with a DSP to digitally process the signal to generate the audio output signal. Hence, Yang's first embodiment does not teach or suggest "a Digital Interface Receiver (DIR) to determine a sampling frequency of the optical signal from the receiver so as to provide a digital optical signal to a digital signal processor (DSP) according to the optical signal; and the DSP to digitally process the digital optical signal received from the DIR and to generate the audio output signal."

Yang's second embodiment, as illustrated in FIG. 4, describes an AV amplifier where receiving of a signal is based on the signal being greater than a predetermined threshold which is determined using a small signal detecting circuit 703 (no examples of a digital detecting circuit), the analog signal is sent directly to the AV processing circuit (not converted to digital first), and no conversion of the analog signal to digital is used. However, Yang does not describe digital interface receiver to determine a sampling frequency of the optical signal to

provide a digital optical signal with a DSP to digitally process the signal to generate the audio output signal. Hence, Yang's first embodiment does not teach or suggest a "a Digital Interface Receiver (DIR) to determine a sampling frequency of the optical signal from the receiver to provide a digital optical signal to a digital signal processor (DSP); and the DSP to digitally process the digital optical signal received from the DIR and generate the audio output signal."

Yang's third embodiment, as illustrated in FIG. 6, receives a digital signal, then identifies the format of the signal with a signal identifying /comparing module 7, sends the corresponding identifying signal to the microprocessor 3, which controls the turning on/off of the main power supply 5. Yang identifies a format of a digital signal and notifies the microprocessor of the format so that the microprocessor turns on the power for the particular source (e.g., DVD) in correspondence with the format. Hence, Yang does not teach or suggest "a Digital Interface Receiver (DIR) to determine a sampling frequency of the optical signal from the receiver so as to provide a digital optical signal to a digital signal processor (DSP) according to the optical signal; and the DSP to digitally process the digital optical signal received from the DIR and to generate the audio output signal."

Bergman describes (see FIG. 2 and paragraphs [0025]-[0026] of Bergman) filtering and rectifying without determining a sample frequency of the signal, and without interfacing a digital audio signal based on the sampling frequency between the buffer and a DSP. Hence, Bergman relies entirely on a filtering, rectifying and switching process, but fails to teach or suggest incorporating any type of digital interfacing and DSP processing to "determine a sampling frequency of the optical signal so as to provide a digital optical signal based on the sampling frequency to a digital signal processor (DSP) according to the optical signal; and ...to digitally process the digital optical signal received from the Digital Interface Receiver and to generate the audio output signal," as is recited in independent claim 1, and similarly in independent claims 8, 13, 19, and 27.

Thus, at best, Bergman only describes filtering, rectifying and switching a power supply signal to audio circuitry. Bergman does not even mention digital interfacing and DSP processing of the received signal. Hence, Bergman fails to teach or suggest "a Digital Interface Receiver (DIR) to determine a sampling frequency of the optical signal from the receiver so as to provide a digital optical signal to a digital signal processor (DSP) according to the optical signal; and the

DSP to digitally process the digital optical signal received from the DIR and to generate the audio output signal."

Therefore, Yang and Bergman, alone or in combination, fail to teach or disclose "a coupled power control grouping to control power supply to the audio device and an audio output signal with the optical signal from the receiver; upon receipt of a switched on-signal" and including "a Digital Interface Receiver (DIR) to determine a sampling frequency of the optical signal from the receiver so as to provide a digital optical signal to a digital signal processor (DSP)according to the optical signal; and the DSP to digitally process the digital optical signal received from the DIR and to generate the audio output signal," as is recited in independent claim 1, and similarly in independent claims 8, 13, 19, and 27.

Since Yang and Bergman, alone or in combination, do not teach or disclose all of the features of independent claims 1, 8, 13, 19, and 27, independent claims 1, 8, 13, 19, and 27 are patentably distinguishable over Yang and Bergman, alone or in combination, and are deemed to be allowable.

Accordingly, withdrawal of these rejections and allowance of these claims are earnestly solicited.

Dependent claims 2-5, 9-12, 14-18, 20-23, 25-26, 28-31, and 33-34

With respect to claims 2-5, 9-12, 14-18, 20-23, 25-26, 28-31, and 33-34, it is respectfully submitted that for at least the reasons that claims 2-5, 9-12, 14-18, 20-23, 25-26, 28-31, and 33-34 depend from independent claims 1, 8, 13, 19, and 27, respectively, which are patentably distinguishable from Yang and Bergman, alone or in combination, for at least the reasons provided above, and therefore contain each of the features as recited in independent claims 1, 8, 13, 19, and 27, respectively, dependent claims 2-5, 9-12, 14-18, 20-23, 25-26, 28-31, and 33-34 are also patentably distinguishable from Yang and Bergman, alone or in combination, and withdrawal of these rejections and allowance of these claims are respectfully solicited.

Claims 24 and 32 are rejected under 35 USC 103 (a) as being unpatentable over Yang in view of Bergman, and further in view of Holmgren et al. (U.S. 8,024,055; hereafter, Holmgren).

As noted above, Yang and Bergman, alone or in combination, fail to teach or suggest all the features of independent claims 19 and 27. Hence, independent claims 19 and 27, together with claims 24 and 32 which depend therefrom, are patentably distinguishable and deemed to be allowable over Yang and Bergman, alone or in combination.

Holmgren describes controlling one or more audio amplifiers in or associated with a device coupled on a local area network and receiving at least one selected source from other devices also coupled on the network (see col. 3, lines 15-19, Holmgren). Holmgren provides a wireless connection (see col. 4, lines 10-12, Holmgren) and describe a zone player 200 that includes a network interface 202, a processor 204, a memory 206, an audio processing circuit 208, an automatic shutdown control module 210, and an audio amplifier (see col. 4, lines 35-53, Holmgren). That is, Holmgren describes an automatic shutdown control module to power down the audio amplifiers when there is no audio data flow coming to the device, and to power up the audio amplifiers when there is audio data flow coming to the device. Holmgren does not teach or suggest a coupled power control grouping, a DIR and a DSP to control power supplied to a device and to control an audio output signal. Thus, Holmgren fails to teach or suggest "a coupled power control grouping controller to control an on/off state power supplied to the device and to control an audio output signal of the device according to an on/off signal received from the switch; a Digital Interface Receiver (DIR) to determine a sampling frequency of the signal so as to provide a digital signal to a digital signal processor (DSP) according to the signal; and the DSP to digitally process the digital signal received from the DIR and to generate the audio output signal," as is recited in claim 19 and similarly in claim 27.

Therefore, Yang, Bergman, and Holmgren, alone or in combination, fail to teach or suggest "a coupled power control grouping to control power supplied to the device and to control an audio output signal of the device according to an on signal; a Digital Interface Receiver (DIR) to determine a sampling frequency of the signal to provide a digital signal to a digital signal processor (DSP); and the DSP to digitally process the digital signal received from the DIR and generate the audio output signal," as is recited in independent claim 19, and

similarly in independent claim 27

Since Yang, Bergman, and Holmgren, alone or in combination, do not teach or suggest all of the features of independent claims 19 and 27, independent claims 1, 8, 13, 19, and 27 are patentably distinguishable over Yang and Bergman, alone or in combination, and are deemed to be allowable.

Accordingly, withdrawal of these rejections and allowance of these claims are earnestly solicited.

Examiner's Response to Arguments

In view of the Amendments to claims above and the Remarks above, Applicant addresses the Examiner's Response to Arguments recited on page 5-7, as well as the rejections recited on pages 2-5. Reconsideration of the pending claims in view of the above Remarks is earnestly solicited.

Conclusion

It is respectfully submitted that a full and complete response has been made to the outstanding Office Action and, as such, there being no other objections or rejections, this application is in condition for allowance, and a notice to this effect is earnestly solicited.

If the Examiner believes, for any reason, that personal communication will expedite prosecution of this application, the Examiner is invited to telephone the undersigned at the number provided below.

If any further fees are required in connection with the filing of this amendment, please charge the same to our Deposit Account No. 502827.

Respectfully submitted,

STANZIONE & KIM, LLP

Dated: August 17, 2012

919 18th St., NW, Suite 440
Washington, DC 20006
Telephone: (202) 775-1900
Facsimile: (202) 775-1901

By: /Darleen J. Stockley/
Darleen J. Stockley
Registration No. 34,257

Electronic Acknowledgement Receipt

EFS ID:	13521521
Application Number:	12565909
International Application Number:	
Confirmation Number:	1417
Title of Invention:	AUDIO DEVICE, AV SYSTEM HAVING THE AUDIO DEVICE, AND METHOD TO CONTROL THE AUDIO DEVICE
First Named Inventor/Applicant Name:	Jong Taek YOON
Customer Number:	38209
Filer:	Seungman Kim/geraldine maddox
Filer Authorized By:	Seungman Kim
Attorney Docket Number:	103-1339
Receipt Date:	17-AUG-2012
Filing Date:	24-SEP-2009
Time Stamp:	13:39:14
Application Type:	Utility under 35 USC 111(a)

Payment information:

Submitted with Payment	no

File Listing:

Document Number	Document Description	File Name	File Size(Bytes)/ Message Digest	Multi Part /.zip	Pages (if appl.)
1		Amendment_AF.pdf	867733 1ae176b551efe0c03e007109355f5877acf3b930	yes	14

	Multipart Description/PDF files in .zip description		
	Document Description	**Start**	**End**
	Amendment After Final	1	1
	Claims	2	7
	Applicant Arguments/Remarks Made in an Amendment	8	14

Warnings:	
Information:	
Total Files Size (in bytes):	867733

This Acknowledgement Receipt evidences receipt on the noted date by the USPTO of the indicated documents, characterized by the applicant, and including page counts, where applicable. It serves as evidence of receipt similar to a Post Card, as described in MPEP 503.

<u>New Applications Under 35 U.S.C. 111</u>
If a new application is being filed and the application includes the necessary components for a filing date (see 37 CFR 1.53(b)-(d) and MPEP 506), a Filing Receipt (37 CFR 1.54) will be issued in due course and the date shown on this Acknowledgement Receipt will establish the filing date of the application.

<u>National Stage of an International Application under 35 U.S.C. 371</u>
If a timely submission to enter the national stage of an international application is compliant with the conditions of 35 U.S.C. 371 and other applicable requirements a Form PCT/DO/EO/903 indicating acceptance of the application as a national stage submission under 35 U.S.C. 371 will be issued in addition to the Filing Receipt, in due course.

<u>New International Application Filed with the USPTO as a Receiving Office</u>
If a new international application is being filed and the international application includes the necessary components for an international filing date (see PCT Article 11 and MPEP 1810), a Notification of the International Application Number and of the International Filing Date (Form PCT/RO/105) will be issued in due course, subject to prescriptions concerning national security, and the date shown on this Acknowledgement Receipt will establish the international filing date of the application.

PTO/SB/06 (07-06)
Approved for use through 1/31/2007. OMB 0651-0032
U.S. Patent and Trademark Office; U.S. DEPARTMENT OF COMMERCE
Under the Paperwork Reduction Act of 1995, no persons are required to respond to a collection of information unless it displays a valid OMB control number.

PATENT APPLICATION FEE DETERMINATION RECORD

Substitute for Form PTO-875

Application or Docket Number	Filing Date	☐ To be Mailed
12/565,909	09/24/2009	

APPLICATION AS FILED – PART I

FOR	(Column 1) NUMBER FILED	(Column 2) NUMBER EXTRA	SMALL ENTITY ☐ RATE ($)	SMALL ENTITY FEE ($)	OR	OTHER THAN SMALL ENTITY RATE ($)	OTHER THAN SMALL ENTITY FEE ($)
☐ BASIC FEE (37 CFR 1.16(a), (b), or (c))	N/A	N/A	N/A			N/A	
☐ SEARCH FEE (37 CFR 1.16(k), (i), or (m))	N/A	N/A	N/A			N/A	
☐ EXAMINATION FEE (37 CFR 1.16(o), (p), or (q))	N/A	N/A	N/A			N/A	
TOTAL CLAIMS (37 CFR 1.16(i))	minus 20 =	*	X $ =		OR	X $ =	
INDEPENDENT CLAIMS (37 CFR 1.16(h))	minus 3 =	*	X $ =			X $ =	
☐ APPLICATION SIZE FEE (37 CFR 1.16(s))	If the specification and drawings exceed 100 sheets of paper, the application size fee due is $250 ($125 for small entity) for each additional 50 sheets or fraction thereof. See 35 U.S.C. 41(a)(1)(G) and 37 CFR 1.16(s).						
☐ MULTIPLE DEPENDENT CLAIM PRESENT (37 CFR 1.16(j))							
* If the difference in column 1 is less than zero, enter "0" in column 2.			TOTAL			TOTAL	

APPLICATION AS AMENDED – PART II

AMENDMENT 08/17/2012

	(Column 1) CLAIMS REMAINING AFTER AMENDMENT		(Column 2) HIGHEST NUMBER PREVIOUSLY PAID FOR	(Column 3) PRESENT EXTRA	SMALL ENTITY RATE ($)	SMALL ENTITY ADDITIONAL FEE ($)	OR	OTHER THAN SMALL ENTITY RATE ($)	OTHER THAN SMALL ENTITY ADDITIONAL FEE ($)
Total (37 CFR 1.16(i))	* 31	Minus	** 34	= 0	X $ =		OR	X $60=	0
Independent (37 CFR 1.16(h))	* 5	Minus	***5	= 0	X $ =		OR	X $250=	0
☐ Application Size Fee (37 CFR 1.16(s))									
☐ FIRST PRESENTATION OF MULTIPLE DEPENDENT CLAIM (37 CFR 1.16(j))							OR		
					TOTAL ADD'L FEE		OR	TOTAL ADD'L FEE	0

AMENDMENT

	(Column 1) CLAIMS REMAINING AFTER AMENDMENT		(Column 2) HIGHEST NUMBER PREVIOUSLY PAID FOR	(Column 3) PRESENT EXTRA	RATE ($)	ADDITIONAL FEE ($)		RATE ($)	ADDITIONAL FEE ($)
Total (37 CFR 1.16(i))	*	Minus	**	=	X $ =		OR	X $ =	
Independent (37 CFR 1.16(h))	*	Minus	***	=	X $ =		OR	X $ =	
☐ Application Size Fee (37 CFR 1.16(s))									
☐ FIRST PRESENTATION OF MULTIPLE DEPENDENT CLAIM (37 CFR 1.16(j))							OR		
					TOTAL ADD'L FEE		OR	TOTAL ADD'L FEE	

* If the entry in column 1 is less than the entry in column 2, write "0" in column 3.

** If the "Highest Number Previously Paid For" IN THIS SPACE is less than 20, enter "20".

*** If the "Highest Number Previously Paid For" IN THIS SPACE is less than 3, enter "3".

The "Highest Number Previously Paid For" (Total or Independent) is the highest number found in the appropriate box in column 1.

Legal Instrument Examiner:
/SHARONE MOORE/

This collection of information is required by 37 CFR 1.16. The information is required to obtain or retain a benefit by the public which is to file (and by the USPTO to process) an application. Confidentiality is governed by 35 U.S.C. 122 and 37 CFR 1.14. This collection is estimated to take 12 minutes to complete, including gathering, preparing, and submitting the completed application form to the USPTO. Time will vary depending upon the individual case. Any comments on the amount of time you require to complete this form and/or suggestions for reducing this burden, should be sent to the Chief Information Officer, U.S. Patent and Trademark Office, U.S. Department of Commerce, P.O. Box 1450, Alexandria, VA 22313-1450. DO NOT SEND FEES OR COMPLETED FORMS TO THIS ADDRESS. **SEND TO: Commissioner for Patents, P.O. Box 1450, Alexandria, VA 22313-1450.**

If you need assistance in completing the form, call 1-800-PTO-9199 and select option 2.

UNITED STATES PATENT AND TRADEMARK OFFICE

UNITED STATES DEPARTMENT OF COMMERCE
United States Patent and Trademark Office
Address: COMMISSIONER FOR PATENTS
P.O. Box 1450
Alexandria, Virginia 22313-1450
www.uspto.gov

APPLICATION NO.	FILING DATE	FIRST NAMED INVENTOR	ATTORNEY DOCKET NO.	CONFIRMATION NO.
12/565,909	09/24/2009	Jong Taek YOON	103-1339	1417

38209 7590 06/19/2012
Stanzione & Kim, LLP
919 18th Street, NW
Suite 440
Washington, DC 20006

EXAMINER
TANG, SON M

ART UNIT	PAPER NUMBER
2612	

MAIL DATE	DELIVERY MODE
06/19/2012	PAPER

Please find below and/or attached an Office communication concerning this application or proceeding.

The time period for reply, if any, is set in the attached communication.

Office Action Summary	Application No.	Applicant(s)	
	12/565,909	YOON ET AL.	
	Examiner	Art Unit	
	SON M. TANG	2612	

-- The MAILING DATE of this communication appears on the cover sheet with the correspondence address --

Period for Reply

A SHORTENED STATUTORY PERIOD FOR REPLY IS SET TO EXPIRE 3 MONTH(S) OR THIRTY (30) DAYS, WHICHEVER IS LONGER, FROM THE MAILING DATE OF THIS COMMUNICATION.

- Extensions of time may be available under the provisions of 37 CFR 1.136(a). In no event, however, may a reply be timely filed after SIX (6) MONTHS from the mailing date of this communication.
- If NO period for reply is specified above, the maximum statutory period will apply and will expire SIX (6) MONTHS from the mailing date of this communication.
- Failure to reply within the set or extended period for reply will, by statute, cause the application to become ABANDONED (35 U.S.C. § 133). Any reply received by the Office later than three months after the mailing date of this communication, even if timely filed, may reduce any earned patent term adjustment. See 37 CFR 1.704(b).

Status

1)☒ Responsive to communication(s) filed on *13 March 2012*.

2a)☒ This action is **FINAL**. 2b)☐ This action is non-final.

3)☐ An election was made by the applicant in response to a restriction requirement set forth during the interview on _____; the restriction requirement and election have been incorporated into this action.

4)☐ Since this application is in condition for allowance except for formal matters, prosecution as to the merits is closed in accordance with the practice under *Ex parte Quayle*, 1935 C.D. 11, 453 O.G. 213.

Disposition of Claims

5)☒ Claim(s) *1-5,8-17 and 19-34* is/are pending in the application.

5a) Of the above claim(s) _____ is/are withdrawn from consideration.

6)☐ Claim(s) _____ is/are allowed.

7)☒ Claim(s) *1-5,8-17 and 19-34* is/are rejected.

8)☐ Claim(s) _____ is/are objected to.

9)☐ Claim(s) _____ are subject to restriction and/or election requirement.

Application Papers

10)☐ The specification is objected to by the Examiner.

11)☐ The drawing(s) filed on _____ is/are: a)☐ accepted or b)☐ objected to by the Examiner.

Applicant may not request that any objection to the drawing(s) be held in abeyance. See 37 CFR 1.85(a).

Replacement drawing sheet(s) including the correction is required if the drawing(s) is objected to. See 37 CFR 1.121(d).

12)☐ The oath or declaration is objected to by the Examiner. Note the attached Office Action or form PTO-152.

Priority under 35 U.S.C. § 119

13)☐ Acknowledgment is made of a claim for foreign priority under 35 U.S.C. § 119(a)-(d) or (f).

a)☐ All b)☐ Some * c)☐ None of:

1.☐ Certified copies of the priority documents have been received.

2.☐ Certified copies of the priority documents have been received in Application No. _____.

3.☐ Copies of the certified copies of the priority documents have been received in this National Stage application from the International Bureau (PCT Rule 17.2(a)).

* See the attached detailed Office action for a list of the certified copies not received.

Attachment(s)

1) ☒ Notice of References Cited (PTO-892)
2) ☐ Notice of Draftsperson's Patent Drawing Review (PTO-948)
3) ☐ Information Disclosure Statement(s) (PTO/SB/08) Paper No(s)/Mail Date _____.
4) ☐ Interview Summary (PTO-413) Paper No(s)/Mail Date. _____ .
5) ☐ Notice of Informal Patent Application
6) ☐ Other: _____.

DETAILED ACTION

Claim Rejections - 35 USC § 103

1. The following is a quotation of 35 U.S.C. 103(a) which forms the basis for all obviousness rejections set forth in this Office action:

> (a) A patent may not be obtained though the invention is not identically disclosed or described as set forth in section 102 of this title, if the differences between the subject matter sought to be patented and the prior art are such that the subject matter as a whole would have been obvious at the time the invention was made to a person having ordinary skill in the art to which said subject matter pertains. Patentability shall not be negatived by the manner in which the invention was made.

2. Claims **1-5, 8-23, 25-31 and 33-34** are 35 U.S.C. 103 (a) as being unpatentable over **Yang et al**. [US 6,690,431; Yang] in view of **Bergman et al**. [US 2009/022,552,8; Bergman].

Regarding to claims 1, 8, 10, 13-14, 19-20, 25-28, 31, 33-34: Yang discloses a method of controlling a device, and the device is an audio/video (AV) amplifier system comprising, an external device (e.g. CD, VCD, LD, DVD, VTR) inherently includes a signal transmitter to output a signal upon receipt of power on/off signal from user [col. 4, lines 1-2], the external device (e.g. CD) connected to the AV amplifier system [Fig. 2] having an audio receiver (7) includes (701, 702) to receive the signal and a microcomputer (CPU 3) to control power supply and audio output according to whether the signal is received [see Figs. 2-6, col. 2, lines 50-66, col. 5, lines 15-67 and col. 6, lines 1-25], Yang teaches an A/D converter (e.g. rectifier) for converting the received signal from the external device, wherein the signal is being compared with an experimental threshold values to determine which signal source is received (e.g. CD, VCD, LD, DVD or VTR) and if the condition is met, the digital signal analyzer (702) outputs signal to microprocessor to control power supply, because the comparison switch (702) is configured to determine various different sources, which does not specifically mention of when the switch is turn off. **Bergman** teaches an audio device with integrated switching power supply

comprises a switch (200) in a formed of a transistor which configured to receive a suppressed noise signal from filter (204) and rectifier (206), and turn on/off to control power supply. With that, it is obvious one having ordinary skill in the art at the time the invention was made, to employ a switch suggested by Bergman into the switch of Yang, so that the switch is be able to turn on/off, for the purpose of protecting the system and performing more accuracy. Although, Bergman input signal is an AC signal, not an audio signal from an external device, but the concept of filtering noise signal and rectifying the signal prior to switch on power supply to the system can be applied in any appropriate system, because most electrical signal contains noise.

Regarding to claims 2-3, 9, 15-16 and 30: Yang further discloses that the receiver (102) received digital signal through optic fiber [cited at col. 5, lines 40-43 and 50-52], that constitutes of claimed that the signal is an optical signal including a clock signal and audio signal, because digital audio signal is being transmitted in a form of pulses that the clock signal is included to carry data, such as audio.

Regarding to claims 11, 21 and 29: Yang discloses the AV system which used to enhance the power of the electro-volume of the speaker system [col. 1, lines 12-19], although, Yang does not show the speaker system, it is inherently included in the AV system of Yang, because the AV system is intended to enhance the power for the audio speaker.

Regarding to claim 23: Yang discloses a plurality of electronic devices (e.g. CD, VCD, LD, DVD and VTR) connected to an electronic switch device (101) of the AV system [Fig. 2], the connection normally connect through the coupling or port of the devices. With that, the connection port of the receiver device is inherently included with the AV system, in order for the CD device to connect to the AV system.

Regarding to claims 4-5, 12 and 17: Yang discloses all the limitations described above, including an AV processing circuit (201) for processing received signal, except for not specifically show a filter to cancel noise from the received signal, a rectifier to rectify the noise-cancelled signal and a switch to turn on upon receipt of the rectified signal. Bergman teaches an audio device with integrated switching power supply comprises, a filter (204) for filtering noise, rectifier (206) for rectifying signal and a power switch (200) connected to the rectifier [see Figs. 2-3 and paragraphs 0025-0027], although, the receiving signal is not audio signal from the external device (e.g. CD, DVD), the reference shows a known concept of filtering noise from the any appropriate receiving signal from any appropriate sources. Therefore, it is obvious to one having ordinary skill in the art at the time the invention was made, to implement a noise filter, rectifier and power switch as taught by Bergman with the AV processing circuit of Yang, the implement would yield a predictable results, the resulted would improve the system, because most receiving signal from other device is not noise free, which needs to filter for more accuracy.

3. Claims **24 and 32** are rejected under 35 U.S.C. 103 (a) as being unpatentable over Yang in views of Bergman and further in view of Holmgren et al. [US 8,024,055; Holmgren].

Regarding to claims 24 and 32: Yang and Bergman made obvious above, except for not specifically mention that the connection between the receiver and external source through a wireless connection. **Holmgren** teaches a system for controlling amplifier comprising a plurality of electronic devices (e.g. 102, 104, 106, 110 and 112) is connected through wireless connection [see Fig. 1-2A, col. 4, lines 1-53 and col. 5, lines 32-45]. One having ordinary skill artisan would found it obvious to apply an alternative technology such as wireless connection as suggested by

Holmgren, the modification would provide a benefit of at least convenience to use and less labor for installation.

Response to Arguments

4. Applicant's arguments filed 3/13/2012 have been fully considered but they are not persuasive.

Applicant's Arguments:

(1) "transmitter of an external device" The Office Action is relying on the theory of inherency in any manner, "the Examiner must provide a basis in fact and/or technical reasoning to reasonably support the determination that the allegedly inherent characteristic necessarily flows from the teachings of the applied art.

(2) Yang does not teach or suggest controlling the power supply and audio output according to whether the signal is received, but rather compares a received signal with a threshold value and turn on/off the power and the audio output base on that comparison.

(3) Bergman points out that there are typical drawbacks to using a digital switching power supply, so that Applicants respectfully submit that it would not be obvious to utilize Bergman's noise filter, rectifier and power switch in independent claims 1, 8 and 13 of the present inventive concept. That is, Bergman discloses, [0021], "the typical drawback of using a digital switching power supply is that it tends to create a lot of digital noise (both radiated and conducted) which can interfere with sensitive electronics and, in particular, audio quality." In addition, Bergman discloses a switching power supply, but does not disclose controlling a power supply and audio output according to whether the signal is received.

(4) It would not have been obvious to combine Bergman's noise filter, rectifier and power switch with Yang's amplifier because Yang is arranged to judge differences between sampling signals and experimental threshold values, a system in which introduction of more noise could be detrimental, and further, even if combined, Yang and Bergman do not teach or suggest controlling the power supply and audio output according to whether the signal is received, as is done in the present inventive concept.

Examiner's Responses:

(1) a transmitter (1) of an external device (e.g. broadcast devices 5 VCD and DVD) and receiver (2) connected with device (7) see Figs. 8-9 of reference Lin [US 2009/0222863].

(2) Yang teaches that component (702) is turn on in response to the received signal from (CD, VCD, LD, DVD and VTR) to microprocessor controls power supply and audio output, disregarding of how the component (702) turn on, because the claim is broadly claimed the switch is turn on base on the received signal. The component (702) performs as a switch, because it is turn on (outputs) when the condition is met, if the received signal average value is too low compares to the threshold, the condition is not met. The comparison part is a function of the switch (e.g. component 702), not used for claimed rejection.

(3) Bergman mentions of digital noise (both radiated and conducted) as discussed above, which suggested that in the previous embodiment, but as discussed below, embodiments of the present invention allow the use of a switching power supply while minimizing effects of the noise associated with the switching power supply, as cited at the bottom of [paragraph 0021]. Thus, Bergman suggested that used of noise filtering in the switching power supply would minimize noise associated with the switch. Yang already disclosed the method of controlling a

power supply and audio output according to whether the signal is received, Bergman merely bring in the rejection for a power supply switch that be able to turn on/off.

(4) As explained in the previous paragraph, Bergman purposely to minimizing effects of the noise associated with the switching power supply, by adding a noise filter (204, 302), the purpose of the filter is to suppress noise in the signal, since, both inventions are dealing with controlling power supply to the device base on incoming signal, it is perfectly combinable and modifiable.

Conclusion

5. **THIS ACTION IS MADE FINAL.** Applicant is reminded of the extension of time policy as set forth in 37 CFR 1.136(a).

A shortened statutory period for reply to this final action is set to expire THREE MONTHS from the mailing date of this action. In the event a first reply is filed within TWO MONTHS of the mailing date of this final action and the advisory action is not mailed until after the end of the THREE-MONTH shortened statutory period, then the shortened statutory period will expire on the date the advisory action is mailed, and any extension fee pursuant to 37 CFR 1.136(a) will be calculated from the mailing date of the advisory action. In no event, however, will the statutory period for reply expire later than SIX MONTHS from the mailing date of this final action.

Any inquiry concerning this communication or earlier communications from the examiner should be directed to SON M. TANG whose telephone number is (571)272-2962. The examiner can normally be reached on 5/8.

If attempts to reach the examiner by telephone are unsuccessful, the examiner's supervisor, Daniel Wu can be reached on (571)272-2964. The fax phone number for the organization where this application or proceeding is assigned is 571-273-8300.

Information regarding the status of an application may be obtained from the Patent Application Information Retrieval (PAIR) system. Status information for published applications may be obtained from either Private PAIR or Public PAIR. Status information for unpublished applications is available through Private PAIR only. For more information about the PAIR system, see http://pair-direct.uspto.gov. Should you have questions on access to the Private PAIR system, contact the Electronic Business Center (EBC) at 866-217-9197 (toll-free). If you would like assistance from a USPTO Customer Service Representative or access to the automated information system, call 800-786-9199 (IN USA OR CANADA) or 571-272-1000.

/S. M. T./
Examiner, Art Unit 2612

/DANIEL WU/
Supervisory Patent Examiner, Art Unit 2612

Notice of References Cited	Application/Control No. 12/565,909	Applicant(s)/Patent Under Reexamination YOON ET AL.	
	Examiner SON M. TANG	Art Unit 2612	Page 1 of 1

U.S. PATENT DOCUMENTS

*		Document Number Country Code-Number-Kind Code	Date MM-YYYY	Name	Classification
*	A	US-5,539,477 A	07-1996	Miyajima, Akio	348/730
*	B	US-5,722,050 A	02-1998	Chen, Jinsaun	455/66.1
*	C	US-5,917,557 A	06-1999	Toyoda, Takashi	348/705
*	D	US-6,590,982 B1	07-2003	Chen, Jinsaun	381/2
*	E	US-6,690,431 B1	02-2004	Yang et al.	348/706
*	F	US-2004/0137878 A1	07-2004	Oyama, Kazuya	455/411
*	G	US-2005/0233695 A1	10-2005	Cho, Cheon Kwon	455/013.4
*	H	US-2009/0222863 A1	09-2009	Lin, Chung-Hung	725/81
*	I	US-7,684,885 B2	03-2010	Woolfork, C. Earl	700/94
*	J	US-7,894,678 B2	02-2011	Nakata et al.	382/232
*	K	US-8,024,055 B1	09-2011	Holmgren et al.	700/94
	L	US-			
	M	US-			

FOREIGN PATENT DOCUMENTS

*		Document Number Country Code-Number-Kind Code	Date MM-YYYY	Country	Name	Classification
	N					
	O					
	P					
	Q					
	R					
	S					
	T					

NON-PATENT DOCUMENTS

*		Include as applicable: Author, Title Date, Publisher, Edition or Volume, Pertinent Pages)
	U	
	V	
	W	
	X	

*A copy of this reference is not being furnished with this Office action. (See MPEP § 707.05(a).)
Dates in MM-YYYY format are publication dates. Classifications may be US or foreign.

Index of Claims	Application/Control No.	Applicant(s)/Patent Under Reexamination
	12565909	YOON ET AL.
	Examiner	**Art Unit**
	SON M TANG	2612

✓	Rejected	-	Cancelled	N	Non-Elected	A	Appeal
=	Allowed	÷	Restricted	I	Interference	O	Objected

☐ Claims renumbered in the same order as presented by applicant ☐ CPA ☐ T.D. ☐ R.1.47

CLAIM		DATE								
Final	Original	12/05/2011	06/05/2012							
	1	✓	✓							
	2	✓	✓							
	3	✓	✓							
	4	✓	✓							
	5	✓	-							
	6	✓	-							
	7	✓	✓							
	8	✓	✓							
	9	✓	✓							
	10	✓	✓							
	11	✓	✓							
	12	✓	✓							
	13	✓	✓							
	14	✓	✓							
	15	✓	✓							
	16	✓	✓							
	17	✓	✓							
	18	✓	-							
	19	✓	✓							
	20	✓	✓							
	21	✓	✓							
	22	✓	✓							
	23	✓	✓							
	24	✓	✓							
	25	✓	✓							
	26	✓	✓							
	27	✓	✓							
	28	✓	✓							
	29	✓	✓							
	30	✓	✓							
	31	✓	✓							
	32	✓	✓							
	33	✓	✓							
	34	✓	✓							

EAST Search History

EAST Search History (Prior Art)

Ref #	Hits	Search Query	DBs	Default Operator	Plurals	Time Stamp
S1	1600	(audio near2 (device system)) same (external transmitter) near5 (receiv$3 coupl$3 connect$3) same (output near3 audio)	US-PGPUB; USPAT; USOCR; FPRS; EPO; JPO; DERWENT; IBM_TDB	OR	OFF	2011/12/03 01:43
S2	7002	(receiv$3 near5 audio) same (output near5 audio) same (processor computer microcomputer)	US-PGPUB; USPAT; USOCR; FPRS; EPO; JPO; DERWENT; IBM_TDB	OR	OFF	2011/12/03 01:45
S3	333	S1 and S2	US-PGPUB; USPAT; USOCR; FPRS; EPO; JPO; DERWENT; IBM_TDB	OR	OFF	2011/12/03 01:45
S4	4	S3 and (audio near3 output) with (according depending) near6 (audio near3 (input receiv$3))	US-PGPUB; USPAT; USOCR; FPRS; EPO; JPO; DERWENT; IBM_TDB	OR	OFF	2011/12/03 01:46
S5	0	((audio sound) near2 (input receiv$3)) same (external near3 (device appratus unit transmitter)) same (output near3 (sound audio)) with (according corresponding) near5 (input receiv$3)	US-PGPUB; USPAT; USOCR; FPRS; EPO; JPO; DERWENT; IBM_TDB	OR	OFF	2011/12/03 02:08
S6	721	(audio with (connect$3 coupl$3)) near6 (audio near3 receiver) same (output near3 audio)	US-PGPUB; USPAT; USOCR; FPRS; EPO; JPO; DERWENT; IBM_TDB	OR	OFF	2011/12/03 02:09
S7	1519	381/71.1,14,26-28,143,372.ccls.	US-PGPUB; USPAT; USOCR; FPRS; EPO; JPO; DERWENT; IBM_TDB	OR	OFF	2011/12/03 02:10
S8	5	S6 and S7	US-PGPUB;	OR	OFF	2011/12/03

			USPAT; USOCR; FPRS; EPO; JPO; DERWENT; IBM_TDB			02:10
S9	17	("4683590" | "4860364" | "4998241" | "5033082" | "5216722" | "5323458" | "5323459" | "5371789" | "5396554").PN. OR ("5664019").URPN.	US-PGPUB; USPAT; USOCR	OR	OFF	2011/12/03 11:15
S10	73	("2236946" | "2828413" | "2840694" | "3080785" | "3085460" | "3087117" | "3296916" | "3579211" | "3743751" | "3781451" | "3825666" | "3863157" | "3901118" | "3906160" | "4004228" | "4229826" | "4335930" | "4344184" | "4369521" | "4430757" | "4453269" | "4464792" | "4471493" | "4612688" | "4647135" | "4721926" | "4794622" | "4845751" | "4899388" | "4988957" | "5025704" | "5214568").PN. OR ("5771441").URPN.	US-PGPUB; USPAT; USOCR	OR	OFF	2011/12/03 11:20
S11	60	(audio near2 signal near3 transmit$3) same (audio near2 signal near3 receiv$3) same (control$3 near4 power)	US-PGPUB; USPAT; USOCR	OR	OFF	2011/12/03 11:48
S12	11	("4857917").PN. OR ("5539477").URPN.	US-PGPUB; USPAT; USOCR	OR	OFF	2011/12/04 16:49
S13	16	("4858006" | "5170159" | "5539477" | "5548346" | "5754254" | "5754256" | "5838393" | "5917557" | "6118496" | "6122018" | "6167140" | "6340968").PN. OR ("6690431").URPN.	US-PGPUB; USPAT; USOCR	OR	OFF	2011/12/04 16:54
S14	135	(audio near3 receiver) same (rectifier with filter)	US-PGPUB; USPAT; USOCR; FPRS; EPO; JPO; DERWENT; IBM_TDB	OR	OFF	2011/12/04 20:37
S15	206599	"348"/$.ccls.	US-PGPUB; USPAT; USOCR; FPRS; EPO; JPO; DERWENT; IBM_TDB	OR	OFF	2011/12/04 20:38
S16	14	S14 and S15	US-PGPUB; USPAT; USOCR; FPRS; EPO; JPO; DERWENT; IBM_TDB	OR	OFF	2011/12/04 20:38
S17	10	S16 and (control$4 near5 (power supply))	US-PGPUB; USPAT; USOCR; FPRS; EPO; JPO; DERWENT; IBM_TDB	OR	OFF	2011/12/04 20:38

S18	27	("3766403" | "4005344" | "4385264" | "4866525" | "4885522" | "5175441" | "5272382").PN. OR ("5414475").URPN.	US-PGPUB; USPAT; USOCR	OR	OFF	2011/12/04 20:42
S19	9	((audio AV) near3 receiver) same (rectifier with filter) same (power near5 control$4)	US-PGPUB; USPAT; USOCR; FPRS; EPO; JPO; DERWENT; IBM_TDB	OR	OFF	2011/12/04 20:44
S20	24	((audio AV) near3 receiver) same (rectifier with filter) and (power near5 control$4)	US-PGPUB; USPAT; USOCR; FPRS; EPO; JPO; DERWENT; IBM_TDB	OR	OFF	2011/12/04 20:48
S21	15	S20 not S19	US-PGPUB; USPAT; USOCR; FPRS; EPO; JPO; DERWENT; IBM_TDB	OR	OFF	2011/12/04 20:49
S22	3	((audio AV) near5 receiver) same (rectifier same (noise near3 filter)) and (power near5 control$4)	US-PGPUB; USPAT; USOCR; FPRS; EPO; JPO; DERWENT; IBM_TDB	OR	OFF	2011/12/04 20:52
S23	0	((audio AV) with receiver with speaker) same (rectifier amplifier) same (noise near3 filter) and (power near5 control$4)	US-PGPUB; USPAT; USOCR; FPRS; EPO; JPO; DERWENT; IBM_TDB	OR	OFF	2011/12/04 20:54
S24	9	((audio AV) same receiver same speaker) same (rectifier amplifier) same (noise near3 filter) and (power near5 control$4)	US-PGPUB; USPAT; USOCR; FPRS; EPO; JPO; DERWENT; IBM_TDB	OR	OFF	2011/12/04 20:54
S25	5	("5722050" | "5768399" | "6118876").PN. OR ("6590982").URPN.	US-PGPUB; USPAT; USOCR	OR	OFF	2011/12/04 21:17
S26	5	(audio same (receiver with (filter near3 noise))) same (rectifier amplifier) same (switch$3 relay$3) near6 (power supply)	US-PGPUB; USPAT; USOCR	OR	OFF	2011/12/04 21:40
S27	10	(audio near5 (receiver)) same (filter$3 near3 noise) same (rectifier amplifier) same (switch$3 relay$3) with (power supply)	US-PGPUB; USPAT; USOCR	OR	OFF	2011/12/04 21:44
S28	8	S27 not S26	US-PGPUB; USPAT; USOCR	OR	OFF	2011/12/04 21:45
S29	7	(audio near5 (receiver)) and (filter$3	US-PGPUB;	OR	OFF	2011/12/04

		near5 noise) same (rectifier amplifier) same (switch$3 relay$3) near8 (switch$3 near3 (power supply))	USPAT; USOCR			21:50
S30	7	(("7346662") or ("4621374") or ("5406634")).PN.	US-PGPUB; USPAT; USOCR; FPRS; EPO; JPO; DERWENT; IBM_TDB	OR	OFF	2011/12/04 23:12

12/5/2011 1:46:24 AM
C:\Users\stang\Documents\EAST\Workspaces\12565909.wsp

Search Notes	Application/Control No.	Applicant(s)/Patent Under Reexamination
	12565909	YOON ET AL.
	Examiner	**Art Unit**
	SON M TANG	2612

SEARCHED

Class	Subclass	Date	Examiner
340	5.1,516,635,653-654	12/5/2011	ST
381	71.1,14,26-28,143,372	12/5/2011	ST

SEARCH NOTES

Search Notes	Date	Examiner
Consulted with Daniel Wu	6/5/2012	ST
updated search	6/5/2012	ST

INTERFERENCE SEARCH

Class	Subclass	Date	Examiner

EAST Search History

EAST Search History (Prior Art)

Ref #	Hits	Search Query	DBs	Default Operator	Plurals	Time Stamp
S68	19456	(audio/visual audio/video AV audio) near3 (system device amplifier) and (wireless) same receiver	US-PGPUB; USPAT; USOCR; FPRS; EPO; JPO; DERWENT; IBM_TDB	OR	OFF	2012/06/05 20:09
S69	4739	(audio/visual audio/video AV audio) near3 (system device amplifier) same (wireless wired) same receiver	US-PGPUB; USPAT; USOCR; FPRS; EPO; JPO; DERWENT; IBM_TDB	OR	OFF	2012/06/05 20:10
S70	453	(audio/visual audio/video AV) near3 (system device amplifier) same (wireless wired) same receiver	US-PGPUB; USPAT; USOCR; FPRS; EPO; JPO; DERWENT; IBM_TDB	OR	OFF	2012/06/05 20:10
S71	132	(audio/visual audio/video AV) near3 (system device amplifier) same (wireless wired) same (receiver with transmitter)	US-PGPUB; USPAT; USOCR; FPRS; EPO; JPO; DERWENT; IBM_TDB	OR	OFF	2012/06/05 20:10
S72	22	(audio/visual audio/video AV) near3 (system device amplifier) same (wireless wired) same (receiver with transmitter) same (CD DVD)	US-PGPUB; USPAT; USOCR; FPRS; EPO; JPO; DERWENT; IBM_TDB	OR	OFF	2012/06/05 20:14
S73	18	("4858006" | "5170159" | "5539477" | "5548346" | "5754254" | "5754256" | "5838393" | "5917557" | "6118496" | "6122018" | "6167140" | "6340968").PN. OR ("6690431").URPN.	US-PGPUB; USPAT; USOCR	OR	OFF	2012/06/05 20:28
S74	70	(audio/visual audio/video AV multimedia reproduction) near3 (system device apparatus amplifier) same (wireless) same (receiver same transmitter) same (CD DVD)	US-PGPUB; USPAT; USOCR; FPRS; EPO; JPO; DERWENT; IBM_TDB	OR	OFF	2012/06/05 20:39

6/ 5/ 2012 11:07:55 PM
C:\ Users\ stang\ Documents\ EAST\ Workspaces\ 12565909.wsp

대 한 민 국 특 허 청
KOREAN INTELLECTUAL PROPERTY OFFICE

별첨 사본은 아래 출원의 원본과 동일함을 증명함.

This is to certify that the following application annexed hereto is a true copy from the records of the Korean Intellectual Property Office

출 원 번 호 : 10-2009-0001234
Application Number

출 원 년 월 일 : 2009년 01월 07일
Filling Date JAN. 07, 2009

출 원 인 : 삼성전자주식회사
Applicant(s) SAMSUNG ELECTRONICS CO., LTD.

2012년 03월 16일

특 허 청
COMMISSIONER

제출 일자 : 2009-01-07

【서지사항】

【서류명】 특허출원서

【참조번호】 0002

【출원구분】 특허출원

【출원인】

【명칭】 삼성전자 주식회사

【출원인코드】 1-1998-104271-3

【대리인】

【성명】 서원호

【대리인코드】 9-2004-000074-3

【포괄위임등록번호】 2005-053352-1

【대리인】

【성명】 서봉석

【대리인코드】 9-1998-000289-6

【포괄위임등록번호】 2003-068131-1

【발명의 국문명칭】 오디오 기기, 이를 구비한 에이브이 시스템 및 오디오 기기의 제어 방법

【발명의 영문명칭】 Audio equipment, AV system having the same and method for controlling the same

【발명자】

【성명】 윤종택

【성명의 영문표기】 YOON Jong Taek

【주민등록번호】 660723-1XXXXXX

【우편번호】 443-371

【주소】 경기도 수원시 영통구 매탄1동 현대힐스테이트 아파트 119-1503

제출 일자 : 2009-01-07

【국적】 KR

【취지】 위와 같이 특허청장에게 제출합니다.

대리인 서원호 (서명 또는 인)

대리인 서봉석 (서명 또는 인)

【수수료】

【출원료】	0	면	38,000	원
【가산출원료】	25	면	0	원
【우선권주장료】	0	건	0	원
【심사청구료】	0	항	0	원
【합계】	38,000 원			

제출 일자 : 2009-01-07

【요약서】

【요약】

본 발명은 외부 기기의 송신부에 연결되어 외부 기기로부터 신호를 전송받는 수신부; 신호의 전송 여부에 따라 전원 공급을 제어하고 오디오 출력을 제어하는 마이컴을 포함한다.

본 발명은 외부 기기의 전원 공급 여부에 따라 오디오 기기의 전원 공급 여부를 판단하여 오디오 기기에 전원을 자동으로 공급 또는 차단시킴으로써 사용자의 편의성을 증대시킬 수 있다. 또한 오디오 기기와 외부 기기를 연결하는 단자 수 및 이에 따른 케이블 수를 줄임으로써 오디오 기기와 외부 기기의 제조 원가를 절감할 수 있다.

【대표도】

도 1

제출 일자 : 2009-01-07

【명세서】

【발명의 명칭】

오디오 기기, 이를 구비한 에이브이 시스템 및 오디오 기기의 제어 방법 {Audio equipment, AV system having the same and method for controlling the same}

【발명의 상세한 설명】

【기술분야】

<1> 본 발명은 오디오 기기, 이를 구비한 에이브이 시스템 및 오디오 기기의 제어 방법에 관한 것으로, 보다 상세하게는 외부 기기로부터 전송된 신호에 기초하여 오디오 신호를 출력하는 오디오 기기, 이를 구비한 에이브이 시스템 및 오디오 기기의 제어 방법에 관한 것이다.

【배경기술】

<2> 일반적으로 오디오 기기는 사람이 들을 수 있는 음역 내의 음파 및 그 음파를 변환한 전기 신호를 다루는 기기로, 오디오 기기는 영상 기기와 연결되어 AV시스템(Audio Visual System)을 이룸으로써 AV 소스의 오디오 신호를 출력하는 동시에 영상 신호를 출력한다. 이러한 AV시스템 중에는 홈시어터 시스템(Home Theater System)이 있는데 이 홈시어터 시스템은 대형 TV와 DVD(Digital Versatile Disk) 플레이어의 급속한 보급으로 영화관 수준의 영화감상을 위해 핵심으로 부상하였다.

<3> 이러한 홈시어터 시스템은 DVD 플레이어와 같은 AV소스 기기, 영상 기기, 오

디오 기기를 포함한다. 그리고 오디오 기기는 AV 리시버 및 스피커를 포함하며 스피커는 서브 우퍼 스피커, 센터 스피커, 프론트 좌우 스피커, 리어 좌우 스피커 등이 있고, 영상 기기는 외부로부터 수신되는 방송 신호를 전송받아 디스플레이하는 것이 가능하다. 여기서의 오디오 기기는 영상 기기 또는 AV소스 기기로부터 오디오 신호를 전송받아 복수 채널의 스피커로 오디오 신호를 출력하는데, 이를 구체적으로 설명하면 다음과 같다.

<4> 홈시어터 시스템의 영상 기기 및 AV 소스 기기는 전원 제어 신호 및 오디오 신호의 출력을 제어하는 마이컴을 가지고, 이 마이컴은 전원 제어 신호를 출력하기 위한 단자와 오디오 신호를 출력하기 위한 단자를 별도로 가지고, 별도의 단자는 서로 다른 통신으로 전원 제어 신호 및 오디오 신호를 전송한다. 또한 오디오 기기 역시 전원 제어 및 오디오 신호의 출력을 제어하는 마이컴을 가지고, 이 마이컴은 전원 제어 신호를 입력받기 위한 단자와 오디오 신호를 입력받기 위한 단자를 별도로 가지고, 별도의 단자는 서로 다른 통신으로 전원 제어 신호 및 오디오 신호를 송수신한다.

<5> 즉, 출력단자 및 입력단자가 연결된 상태에서 영상 기기 또는 AV 소스 기기의 전원이 온되면 전원 제어 신호단자를 통해 영상 기기 또는 AV 소스 기기의 마이컴과 오디오 기기의 마이컴 사이에 통신이 수행되고 그 결과에 따라 오디오 기기의 전원이 온된다. 이때 오디오 신호단자가 연결된 상태에서 오디오 기기의 전원이 온되면 영상 기기 또는 AV 소스 기기의 마이컴과 오디오 기기의 마이컴이 통신을 수행하면서 오디오 기기는 오디오 신호를 출력한다.

<6> 이와 같이 각 기기에 마련된 마이컴에 전원 제어 신호단자와 오디오 신호 단자가 별도로 구비됨으로써 홈시어터의 제조 원가가 상승한다. 그리고 각 단자에 연결되는 케이블에 의해 홈시어터 설치 광간의 미관을 해치고 그 공간의 효율을 떨어뜨린다.

【발명의 내용】

【과제 해결 수단】

<7> 본 발명의 일 측면에 따르면 오디오 기기는 외부 기기의 송신부에 연결되어 외부 기기로부터 신호를 전송받는 수신부; 신호의 전송 여부에 따라 전원 공급을 제어하고 오디오 출력을 제어하는 마이컴을 포함한다.

<8> 수신부는 옵티컬 단자를 가진다.

<9> 신호는 클럭 신호와 오디오 신호를 가지는 옵티컬 신호이다.

<10> 신호의 노이즈를 제거하는 필터부를 더 포함하고, 노이즈가 제거된 신호를 정류하는 정류부를 더 포함하며, 정류된 신호가 인가되면 온되는 스위치부를 더 포함한다.

<11> 마이컴은, 스위치가 온되면 전원의 공급을 제어하고, 오디오 출력을 제어한다.

<12> 본 발명의 다른 측면에 따르면 에이브이 시스템은 전원이 인가되면 신호를 출력하는 송신부를 가지는 외부기기; 신호를 수신하는 수신부와, 신호의 수신 여부에 따라 전원 공급 제어 및 오디오 출력을 제어하는 마이컴을 가지는 오디오 기기

를 포함한다.

<13> 외부기기의 송신부와 오디오 기기의 수신부는 각각 옵티컬 단자를 가지고, 송신부와 수신부는 옵티컬 통신을 수행한다.

<14> 외부기기는, 영상기기 또는 에이브이 소스 기기 중 적어도 하나의 기기이다.

<15> 오디오 기기는, 복수 채널의 스피커와, 에이브이 리시버 또는 증폭기 중 어느 하나를 포함한다.

<16> 오디오 기기는, 신호의 노이즈를 제거하는 필터부와, 노이즈가 제거된 신호를 정류하는 정류부와, 정류된 신호가 인가되면 온되는 스위치부를 더 포함한다.

<17> 본 발명의 또 다른 측면에 따르면 오디오 기기의 제어방법은 외부 기기로부터 수신되는 신호가 있는지 판단하고, 신호의 수신 여부에 대응하여 오디오 기기의 전원 공급을 제어하고 오디오 출력을 제어한다.

<18> 신호는 외부 기기에 전원이 인가되면 출력된다.

<19> 신호의 수신은 옵티컬 통신을 통해 이루어진다.

<20> 신호는, 클럭신호와 오디오 신호를 포함하는 옵티컬 신호이다.

<21> 신호가 수신되면 수신된 신호의 노이즈를 제거하고, 노이즈가 제거된 신호를 정류하고, 정류된 신호에 기초하여 스위치를 온시키는 것을 더 포함한다.

<22> 스위치가 온되면 오디오 기기에 전원을 공급하고 신호 중 오디오 신호를 출력한다.

【효과】

<23> 본 발명의 일 측면 따르면 외부 기기의 전원 공급 여부에 따라 오디오 기기의 전원 공급 여부를 판단하여 오디오 기기에 전원을 자동으로 공급 또는 차단시킴으로써 사용자의 편의성을 증대시킬 수 있다.

<24> 또한 오디오 기기와 외부 기기를 연결하는 케이블의 수를 줄임으로써 오디오 기기가 설치되는 공간의 미관을 미려하게 할 수 있고, 그 공간의 효율을 높일 수 있다.

<25> 또한 오디오 기기와 외부 기기를 연결하는 단자 수 및 이에 따른 케이블 수를 줄임으로써 오디오 기기와 외부 기기의 제조 원가를 절감할 수 있다.

【발명의 실시를 위한 구체적인 내용】

<26> 이하에서는 첨부도면을 참조하여 본 발명에 대해 상세히 설명한다.

<27> 도 1은 본 발명의 제1실시예에 따른 오디오 기기의 구성도로서, 오디오 기기는 AV리시버(200) 또는 증폭기 중 어느 하나와 스피커(300)를 가진다. 이러한 오디오 기기는 옵티컬 단자를 통해 외부 기기(100)와 연결된다.

<28> 이를 좀 더 구체적으로 설명하면, 외부 기기(100)는 외부로부터 전송된 방송 신호 중 영상 신호를 표시하는 영상 기기로, 액정 표시장치(Liquid Crystal Display: LCD), 유기발광 다이오드(Organic Light Emitting Diode: OLED) 등의 사용이 가능하다.

<29> 이러한 외부 기기(100)는 입력부(110), 전원부(120), 마이컴(130) 및 송신부

(140)를 포함한다.

<30> 입력부(110)는 사용자로부터 외부 기기의 전원 온 또는 전원 오프 신호를 입력받고, 입력된 신호를 마이컴(130)으로 전송하고, 전원부(120)는 외부 전원으로부터 각 구성부의 동작에 필요한 전원을 공급받고, 전원 온 또는 전원 오프 신호에 대응하여 각 구성부의 동작 전원을 공급 또는 차단한다.

<31> 마이컴(130)은 입력부(110)로부터 전송된 입력 신호에 대응하는 전원 공급 신호 또는 전원 차단 신호를 전원부(120)에 전송하고, 입력부(110)로부터 전원 온 신호가 입력되면 송신부(140)에 출력 신호를 전송한다. 이때 출력 신호는 옵티컬 신호로, 기본으로 출력되는 클럭(Clock) 신호와 복수 채널의 오디오 신호를 포함한다.

<32> 송신부(140)는 마이컴(130)의 지시에 따라 옵티컬 신호를 오디오 기기의 AV 리시버(200)에 전송한다. 이때 송신부(140)는 옵티컬 단자로 형성되고 이 옵티컬 단자는 옵티컬 케이블이 접속되며, 외부 기기(100)의 송신부(140)는 옵티컬 단자 및 옵티컬 케이블을 통해 오디오 기기의 수신부(210)와 연결되어 옵티컬 신호를 송신한다.

<33> 그 외에, 외부 기기(100)는 외부로부터 수신되는 방송신호 중 사용자가 원하는 채널의 방송신호를 선국하기 위한 튜너와, 선국된 방송신호를 복조하는 복조부와, 복조된 방송신호를 영상, 오디오 및 부가정보 신호로 분리하기 위한 디멀티플렉서와, 디멀티플렉서를 통해 분리된 영상 신호를 표시 가능하도록 신호 처리하는 영상신호 처리부를 더 포함한다.

<34> 오디오 기기의 AV리시버(200)는 외부 기기(100)로부터 압축되어 전송된 오디오 신호를 복호화하고, 복호화된 신호를 오디오 채널 별로 분리한 후 분리된 신호를 증폭시켜 복수 채널의 스피커로 각각 전송하는 기기로, AV리시버(200)는 수신부(210), 필터부(221), 정류부(222), 스위치부(223), 제2마이컴(224), 전원공급부(225), 버퍼부(231), DIR부(232) 및 DSP부(233)를 포함한다.

<35> 수신부(210)는 외부 기기(100)의 송신부(140)로부터 전송된 옵티컬 신호를 수신하고, 수신된 옵티컬 신호를 필터부(221) 및 버퍼부(231)에 전송한다. 여기서 수신부(210)는 옵티컬 단자로 형성되고, 이 옵티컬 단자는 옵티컬 케이블이 접속된다. 즉, 오디오 기기의 수신부(210)는 옵티컬 단자 및 옵티컬 케이블을 통해 외부 기기(100)의 송신부(140)와 연결되어 옵티컬 신호가 수신된다. 여기서 옵티컬 신호는 기본으로 출력되는 클럭(Clock) 신호와 복수 채널의 오디오 신호를 포함한다.

<36> 필터부(221)는 옵티컬 신호에 포함된 서지(surge)와 같은 노이즈를 상쇄시키고, 정류부(222)는 노이즈가 상쇄된 신호의 주파수에 대응하는 플러스(+) 전압으로 변환시키는 정류를 수행하며, 스위치부(223)는 정류된 전압의 인가에 따라 온 동작을 수행하고, 온 동작 신호를 제2마이컴(224)에 전송한다. 여기서 스위치부(223)는 트랜지스터와 같은 스위칭 소자로, 플러스(+) 전압의 인가에 따라 트랜지스터의 베이스 전압이 높아지면 트랜지스터는 턴 온됨으로써 스위치부는 온 동작을 하고, 플러스(+) 전압이 인가되지 않으면 트랜지스터의 베이스 전압이 낮아지면 트랜지스터는 턴 오프됨으로써 스위치부는 오프 동작을 한다.

<37> 제2마이컴(224)은 스위치부(223)로부터 온 신호가 입력되면 전원공급부(22

5)의 동작을 제어하여 오디오 기기의 각 구성부에 동작전원이 공급되도록 하고, 스위치부(223)로부터 오프 신호가 입력되면 전원공급부(225)의 동작을 제어하여 오디오 기기의 각 구성부에 동작전원의 공급이 차단되도록 한다. 그리고 제2마이컴(224)은 스위치부(223)로부터 온신호가 입력되어 전원이 연동 제어되면 외부 기기(100)의 송신부(140)로부터 전송된 디지털 오디오 신호의 출력을 제어한다.

<38> 전원공급부(225)는 외부 전원과 연결되어 있고 제2마이컴(224)의 지시에 따라 각 구성부로 동작 전원을 공급 또는 차단한다.

<39> 버퍼부(231)는 외부 기기(100)로부터 전송된 오디오 신호를 일시적으로 저장하고, DIR부(Digital Interface Receiver: 232)는 버퍼부(231)에 저장된 오디오 신호의 샘플링 주파수를 인식하고, 이 샘플링 주파수에 기초한 디지털 오디오 신호를 버퍼부(231)에서 DSP부(233)로 전송하기 위해 버퍼부(231)와 DSP부(233)를 연결하는 인터페이스 역할을 한다.

<40> DSP부(디지털 신호 프로세서: Digital Signal Processor, 343)는 DIR부(342)를 통해 전송된 디지털 오디오 신호를 사용자가 들을 수 있도록 디지털 신호 처리하여 센터 오디오 신호, 프론트 오디오 신호 및 리어 오디오 신호를 생성한다.

<41> 오디오 기기의 AV 리시버(200)는 DSP부(233)로부터 프론트 오디오 신호를 입력받아 이를 프론트 좌우 아날로그 신호로 변환하여 좌우 프론트 스피커로 출력하는 프론트 디지털/아날로그 변환부(FDAC)와, DSP부(233)로부터 리어 오디오 신호를 입력받아 이를 리어 좌우 아날로그신호로 변환하여 좌우 리어 스피커로 출력하는 리어 디지털/아날로그변환부(RDAC)를 더 포함한다.

<42> 그리고 외부기기(100)로부터 아날로그 오디오 신호를 전송받은 경우 이 아날로그 오디오 신호를 디지털 오디오 신호로 변환하는 ADC(Analog-to-Digital Converter: 미도시)부를 더 포함한다.

<43> 오디오 기기의 스피커(300)는 복수 채널의 오디오 신호를 출력하는 스피커를 사용하는 것이 가능하며, 복수 채널 중 5.1채널의 오디오 신호를 출력하는 5.1 채널의 스피커를 사용한 경우에는 외부기기(100)의 전면 중앙에 설치되는 센터(center) 스피커, 외부기기(100)의 좌우에 설치되는 프론트(front) 스피커, 사용자의 뒤쪽에 좌우에 설치되는 리어(rear) 스피커, 그리고 서브 우퍼(woofer) 스피커를 가진다. 여기서 센터 스피커는 영화 상에서 선명한 대사 를 출력하는 것으로 센터 스피커는 프론트 스피커 사이에서 깔끔한 대사를 출력하기 위해 반드시 필요하다. 그리고 좌우 프론트 스피커는 대부분 뮤지컬 스코어나 약간의 대사 전달과 다양한 음향효과를 출력하며 자연스럽고 넓은 무대감이 형성되도록 하고, 좌우 리어 스피커는 프론트 스피커에서 출력되는 소리에 추가적인 효과음, 입체음, 배경음을 출력하는 것으로 생생한 감동을 준다. 그리고 서브 우퍼 스피커는 중저음을 출력하고 프론트 스피커와 서로 조화를 이루어 박진감과 생동감 넘치도록 한다.

<44> 여기서 스피커(300)는 5.1 스피커에 사이드 좌/우 스피커가 추가된 7.1 채널의 스피커의 이용이 가능하다.

<45> 도 2는 본 발명의 제2실시예에 따른 오디오 기기의 구성도로서, 오디오 기기는 AV리시버(200) 또는 증폭기(Amplifier) 중 어느 하나와 스피커(300)를 가진다. 이러한 오디오 기기는 옵티컬 단자를 통해 복수의 외부 기기인 제 1, 2 외부 기기

(100, 400)와 연결된다.

<46> 여기서 제 1 외부기기(100)의 제1입력부(110), 제1전원부(120), 제1마이컴(130), 제1송신부(130)는 도 1에 도시된 제 1실시예에서 외부기기(100)의 입력부(110), 전원부(120), 제1마이컴(130), 송신부(140)와 동일하여, 동일한 도면 번호를 기재하였고 이에 대한 설명은 생략하도록 한다. 아울러 제 1 외부기기(100)의 제1송신부(140)는 옵티컬 단자로 형성되고 이 옵티컬 단자는 옵티컬 케이블이 접속되며, 제 1외부 기기(100)의 제1송신부(140)는 옵티컬 단자 및 옵티컬 케이블을 통해 오디오 기기의 제1수신부(210a)와 연결되어 옵티컬 신호를 송신한다.

<47> 제 2 외부 기기(400)는 PVR(Personal Video Recorder) 또는 DVD(Digital Video Disc)플레이어, 디빅 플레이어와 같이 멀티미디어를 재생시키기 위한 플레이어 또는 셋탑 박스(STB: Set-Top Box) 등과 같은 AV소스기기로, 각종 압축된 디지털 오디오 및 디지털 영상 신호로 이루어진 스트림들을 저장할 수 있는 매체를 포함하고 있다. 이러한 제 2 외부 기기(400)는 압축된 영상 신호를 영상 기기(100)에 전송하고, 또한 압축된 오디오 신호를 AV 리시버(200)에 전송한다.

<48> 이러한 제 2 외부 기기(400)는 제2입력부(410), 제2전원부(420), 제3마이컴(430) 및 제2송신부(440)를 포함한다. 그리고 제1외부기기(100)로 영상 신호를 전송하기 위한 통신부(미도시)를 더 포함한다.

<49> 제2입력부(410)는 사용자로부터 외부 기기의 전원 온 또는 전원 오프 신호를 입력받고, 입력된 신호를 제3마이컴(430)으로 전송하고, 제2전원부(420)는 외부 전원으로부터 각 구성부의 동작에 필요한 전원을 공급받고, 전원 온 또는 전원 오프

신호에 대응하여 각 구성부의 동작 전원을 공급 또는 차단한다.

<50> 제3마이컴(430)은 제2입력부(410)로부터 전송된 입력 신호에 대응하는 전원 공급 신호 또는 전원 차단 신호를 제2전원부(420)에 전송하고, 제2입력부(410)로부터 전원 온 신호가 입력되면 제2송신부(440)에 출력 신호를 전송한다. 이때 출력 신호는 옵티컬 신호로, 기본으로 출력되는 클럭(Clock) 신호와 복수 채널의 오디오 신호를 포함한다.

<51> 제2송신부(440)는 제3마이컴(430)의 지시에 따라 옵티컬 신호를 오디오 기기의 AV리시버(200)에 전송한다. 이때 제2송신부(440)는 옵티컬 단자로 형성되고 이 옵티컬 단자는 옵티컬 케이블이 접속되며, 제 2외부 기기(400)의 제2송신부(440)는 옵티컬 단자 및 옵티컬 케이블을 통해 오디오 기기의 제2수신부(210b)와 연결되어 옵티컬 신호를 송신한다.

<52> 오디오 기기의 AV리시버(200)는 제 1 외부 기기(100) 또는 2 외부 기기(400)로부터 압축되어 전송된 오디오 신호를 복호화하고, 복호화된 신호를 오디오 채널 별로 분리한 후 분리된 신호를 증폭시켜 복수 채널의 스피커로 각각 전송하는 기기로, AV리시버(200)는 제 1, 2 수신부(210a, 210b), 필터부(221), 정류부(222), 스위치부(223), 제2마이컴(224), 전원공급부(225), 버퍼부(231), DIR부(232), DSP부(233)를 포함한다.

<53> 제1수신부(210a)는 제1외부 기기(100)의 제1송신부(140)로부터 전송된 옵티컬 신호를 수신하고, 수신된 옵티컬 신호를 필터부(221) 및 버퍼부(231)에 전송한다. 여기서 제1수신부(210a)는 옵티컬 단자로 형성되고, 이 옵티컬 단자는 옵티컬

케이블이 접속된다. 즉, 오디오 기기의 제1수신부(210a)는 옵티컬 단자 및 옵티컬 케이블을 통해 제1외부 기기(100)의 제1송신부(140)와 연결되어 옵티컬 신호가 수신된다. 여기서 옵티컬 신호는 기본으로 출력되는 클럭(Clock) 신호와 복수 채널의 오디오 신호를 포함한다.

<54> 제2수신부(210b)는 제2외부 기기(400)의 제2송신부(440)로부터 전송된 옵티컬 신호를 수신하고, 수신된 옵티컬 신호를 필터부(221) 및 버퍼부(231)에 전송한다. 여기서 제2수신부(210b)는 옵티컬 단자로 형성되고, 이 옵티컬 단자는 옵티컬 케이블이 접속된다. 즉, 오디오 기기의 제2수신부(210b)는 옵티컬 단자 및 옵티컬 케이블을 통해 제2외부 기기(400)의 제2송신부(440)와 연결되어 옵티컬 신호가 수신된다. 여기서 옵티컬 신호는 기본으로 출력되는 클럭(Clock) 신호와 복수 채널의 오디오 신호를 포함한다.

<55> 그리고 필터부(221)는 제1수신부(210a) 또는 제2수신부(210b) 중 어느 하나의 수신부를 통해 전송된 옵티컬 신호의 노이즈를 제거하고 또한 버퍼부(231)는 제1수신부(210a) 또는 제2수신부(210b) 중 어느 하나의 수신부를 통해 전송된 옵티컬 신호를 일시 저장한다.

<56> 그리고 정류부(222), 스위치부(223), 제2마이컴(224), 전원공급부(225), DIR부(232), DSP부(233)은 제 1 실시예에서의 정류부(222), 스위치부(223), 제2마이컴(224), 전원공급부(225), DIR부(232), DSP부(233)과 동일하여 그 설명을 생략한다.

<57> 그리고 오디오 기기의 AV 리시버(200)는 DSP부(233)로부터 프론트 오디오 신호를 입력받아 이를 프론트 좌우 아날로그 신호로 변환하여 좌우 프론트 스피커로

출력하는 프론트 디지털/아날로그 변환부(FDAC)와, DSP부(233)로부터 리어 오디오 신호를 입력받아 이를 리어 좌우 아날로그신호로 변환하여 좌우 리어 스피커로 출력하는 리어 디지털/아날로그변환부(RDAC)를 더 포함하고, 외부기기(100)로부터 아날로그 오디오 신호를 전송받은 경우 이 아날로그 오디오 신호를 디지털 오디오 신호로 변환하는 ADC(Analog-to-Digital Converter: 미도시)부를 더 포함한다.

<58> 오디오 기기의 스피커(300)는 복수 채널의 오디오 신호를 출력하는 스피커를 사용하는 것이 가능하며, 복수 채널 중 5.1채널의 오디오 신호를 출력하는 5.1 채널의 스피커를 사용한 경우에는 제1외부기기(100)의 전면 중앙에 설치되는 센터(center) 스피커, 외부기기(100)의 좌우에 설치되는 프론트(front) 스피커, 사용자의 뒤쪽에 좌우에 설치되는 리어(rear) 스피커, 그리고 서브 우퍼(woofer) 스피커를 가진다. 여기서 센터 스피커는 영화 상에서 선명한 대사 를 출력하는 것으로 센터 스피커는 프론트 스피커 사이에서 깔끔한 대사를 출력하기 위해 반드시 필요하다. 그리고 좌우 프론트 스피커는 대부분 뮤지컬 스코어나 약간의 대사 전달과 다양한 음향효과를 출력하며 자연스럽고 넓은 무대감이 형성되도록 하고, 좌우 리어 스피커는 프론트 스피커에서 출력되는 소리에 추가적인 효과음, 입체음, 배경음을 출력하는 것으로 생생한 감동을 준다. 그리고 서브 우퍼 스피커는 중저음을 출력하고 프론트 스피커와 서로 조화를 이루어 박진감과 생동감 넘치도록 한다. 여기서 스피커(300)는 5.1 스피커에 사이드 좌/우 스피커가 추가된 7.1 채널의 스피커의 이용이 가능하다.

<59> 이와 같이, 옵티컬 단자를 이용하여 디지털 오디오 신호를 전달하면서 동시

에 외부 기기의 전원을 감지하고 감지 결과에 기초하여 오디오 기기의 전원 공급을 연동 제어함으로써 사용자에게 편의성을 제공한다.

<60> 또한 오디오 기기의 옵티컬 단자에 필터부, 정류부, 스위치부를 추가하여 전원을 연동 제어하되, 전원 연동 제어를 위한 단자 및 마이컴을 제거함으로써 오디오 기기의 제조 단가를 낮출 수 있고, 오디오 기기의 단자 설치 공간 효율을 높일 수 있다.

<61> 도 3은 본 발명의 제2실시예에 따른 오디오 기기의 제어 순서도로 도 2를 참조하여 설명한다.

<62> 영상기기인 제1외부기기(100)에 전원이 인가되면 제1외부기기(100)는 외부의 방송 신호 중 영상 신호를 화면에 표시하고 옵티컬 신호를 오디오 기기에 전송하며, PVR(PVR:Personal Video Recorder) 또는 DVD(Digital Video Disc)플레이어 또는 셋탑 박스(STB: Set-Top Box) 등과 같은 AV소스 기기인 제2외부기기(400)에 전원이 인가되면 제2외부기기(400)는 저장매체(미도시)에 저장된 영상 신호를 제1외부기기(100)에 전송하고 옵티컬 신호를 오디오 기기에 전송한다.

<63> 이때 제 1 외부기기(100)와 제 2외부기기(400)는 오디오 기기와 옵티컬 단자 및 옵티컬 케이블을 통해 연결되고, 이에 따라 제 1, 2 외부기기(100, 400)로부터 출력되는 출력신호는 옵티컬 단자 및 옵티컬 케이블을 통해 전송되는 옵티컬 신호이다. 이 옵티컬 신호는 기본적으로 출력되는 클럭신호와 오디오 신호를 포함한다.

<64> 즉, 오디오 기기는 제1외부기기(100) 또는 제2외부기기(400)로부터 옵티컬

신호가 수신되는지 옵티컬 신호의 수신 여부를 체크(510)한다.

<65> 그리고 제1외부기기(100) 또는 제2외부기기(400)로부터 옵티컬 신호가 수신되면 수신된 옵티컬 신호의 노이즈를 상쇄시켜 제거(520)하고, 노이즈가 제거된 신호의 주파수에 대응하는 플러스(+) 전압으로 변환시키는 정류(530)를 수행하며, 정류된 전압의 입력에 따라 스위치부(233)는 온(540)된다. 여기서 스위치부(223)는 트랜지스터와 같은 스위칭 소자로, 플러스(+) 전압의 인가에 따라 트랜지스터의 베이스 전압이 높아지면 트랜지스터는 턴 온됨으로써 스위치부는 온된다.

<66> 오디오 기기의 AV리시버(200)는 스위치부(223)가 온되면 오디오 기기의 각 구성부에 동작전원을 공급(550)하여 외부기기와 전원 제어를 연동시킨다. 그리고, 제1외부 기기(100) 또는 제2외부기기(400)로부터 전송된 디지털 오디오 신호를 출력(560)한다.

<67> 즉, 오디오 기기의 각 구성부에 전원이 공급되면 옵티컬 신호 중 디지털 오디오 신호를 버퍼부(231)에 일시적으로 저장하고, 저장된 디지털 오디오 신호를 DIR부(Digital Interface Receiver: 232)를 통해 DSP부(233)에 전송한다. 그리고 디지털 오디오 신호를 사용자가 들을 수 있도록 디지털 신호 처리하여 센터 오디오 신호, 프론트 오디오 신호 및 리어 오디오 신호를 생성하고, 생성된 프론트 오디오 신호를 프론트 좌우 아날로그 신호로 변환하여 좌우 프론트 스피커로 출력하고, 리어 오디오 신호를 리어 좌우 아날로그신호로 변환하여 좌우 리어 스피커로 출력하며, 센터 오디오 신호를 센터 아날로그 신호로 변환하여 센터 스피커로 출력한다.

<68> 그리고 오디오 기기는 계속적으로 제1외부기기(100) 또는 제2외부기기(400)

로부터 옵티컬 신호가 수신되는지 옵티컬 신호의 수신 여부를 체크한다.

<69> 만약 제1외부기기(100) 또는 제2외부기기(400)의 전원이 차단되어 제1외부기기(100) 또는 제2외부기기(400)로부터 옵티컬 신호가 수신되지 않으면 옵티컬 신호의 주파수에 대응하는 플러스(+) 전압이 생성되지 않고, 이에 따라 트랜지스터의 베이스에 플러스(+) 전압이 입력되지 되지 않아 트랜지스터의 베이스 전압이 낮아지면서 트랜지스터는 턴 오프됨으로써 스위치부(233)는 오프된다.

<70> 이때 오디오 기기의 AV리시버(200)는 스위치부(223)가 오프되면 오디오 기기의 각 구성부에 동작전원의 공급을 차단하여 외부기기와 전원 제어를 연동시킨다.

【특허청구범위】

【청구항 1】

외부 기기의 송신부에 연결되어 상기 외부 기기로부터 신호를 전송받는 수신부;

상기 신호의 전송 여부에 따라 전원 공급을 제어하고 오디오 출력을 제어하는 마이컴을 포함하는 오디오 기기.

【청구항 2】

제1항에 있어서,

상기 수신부는 옵티컬 단자를 가지는 오디오 기기.

【청구항 3】

제1항에 있어서,

상기 신호는 클럭 신호와 오디오 신호를 가지는 옵티컬 신호인 오디오 기기.

【청구항 4】

제1항에 있어서,

상기 신호의 노이즈를 제거하는 필터부를 더 포함하는 오디오 기기.

【청구항 5】

제4항에 있어서,

상기 노이즈가 제거된 신호를 정류하는 정류부를 더 포함하는 오디오 기기.

【청구항 6】

제5항에 있어서,

상기 정류된 신호가 인가되면 온되는 스위치부를 더 포함하는 오디오 기기.

【청구항 7】

제6항에 있어서, 상기 마이컴은,

상기 스위치가 온되면 전원의 공급을 제어하고, 오디오 출력을 제어하는 오디오 기기.

【청구항 8】

전원이 인가되면 신호를 출력하는 송신부를 가지는 외부기기;

상기 신호를 수신하는 수신부와, 상기 신호의 수신 여부에 따라 전원 공급 제어 및 오디오 출력을 제어하는 마이컴을 가지는 오디오 기기를 포함하는 에이브이 시스템.

【청구항 9】

제 8 항에 있어서,

상기 외부기기의 송신부와 상기 오디오 기기의 수신부는 각각 옵티컬 단자를 가지고, 상기 송신부와 수신부는 옵티컬 통신을 수행하는 에이브이 시스템.

【청구항 10】

제 8 항에 있어서, 상기 외부기기는,

영상기기 또는 에이브이 소스 기기 중 적어도 하나의 기기인 에이브이 시스

템.

【청구항 11】

제 8 항에 있어서, 상기 오디오 기기는,

복수 채널의 스피커와,

에이브이 리시버 또는 증폭기 중 어느 하나를 포함하는 에이브이 시스템.

【청구항 12】

제 11 항에 있어서, 상기 오디오 기기는,

상기 신호의 노이즈를 제거하는 필터부와, 상기 노이즈가 제거된 신호를 정류하는 정류부와, 상기 정류된 신호가 인가되면 온되는 스위치부를 더 포함하는 에이브이 시스템.

【청구항 13】

외부 기기로부터 수신되는 신호가 있는지 판단하고,

상기 신호의 수신 여부에 대응하여 오디오 기기의 전원 공급을 제어하고 오디오 출력을 제어하는 오디오 기기의 제어 방법.

【청구항 14】

제 13 항에 있어서,

상기 신호는 상기 외부 기기에 전원이 인가되면 출력되는 오디오 기기의 제어 방법.

【청구항 15】

제 14 항에 있어서,

상기 신호의 수신은 옵티컬 통신을 통해 이루어지는 오디오 기기의 제어 방법.

【청구항 16】

제 15 항에 있어서, 상기 신호는

클럭신호와 오디오 신호를 포함하는 옵티컬 신호인 오디오 기기의 제어 방법.

【청구항 17】

제 13 항에 있어서,

상기 신호가 수신되면 수신된 신호의 노이즈를 제거하고,

상기 노이즈가 제거된 신호를 정류하고,

상기 정류된 신호에 기초하여 스위치를 온시키는 것을 더 포함하는 오디오 기기의 제어 방법.

【청구항 18】

제 17 항에 있어서,

상기 스위치가 온되면 상기 오디오 기기에 전원을 공급하고 상기 신호 중 오디오 신호를 출력하는 오디오 기기의 제어 방법.

【도면의 간단한 설명】

<71> 도 1은 본 발명의 제 1 실시예에 따른 오디오 기기의 구성도이다.

<72> 도 2는 본 발명의 제 2 실시예에 따른 오디오 기기의 구성도이다.

<73> 도 3은 본 발명의 제 2 실시예 따른 오디오 기기의 제어 순서도이다.

<74> *도면의 주요부분에 대한 부호 설명*

<75> 100: 외부기기, 제1외부기기 200: AV리시버

<76> 300: 스피커 400: 제2외부기기

【도면】

【도 1】

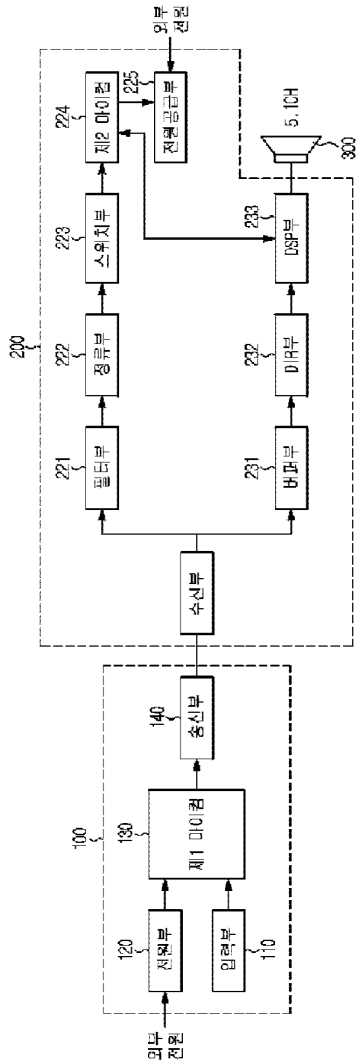
외부 전원
100
120
전원부
110
입력부
130
제1 마이컴
140
송신부
외부 전원
200
수신부
221
필터부
222
정류부
223
스위치부
224
제2 마이컴
225
전원공급부
231
버퍼부
232
DAC부
233
DSP부
5.1CH
300

【도 2】

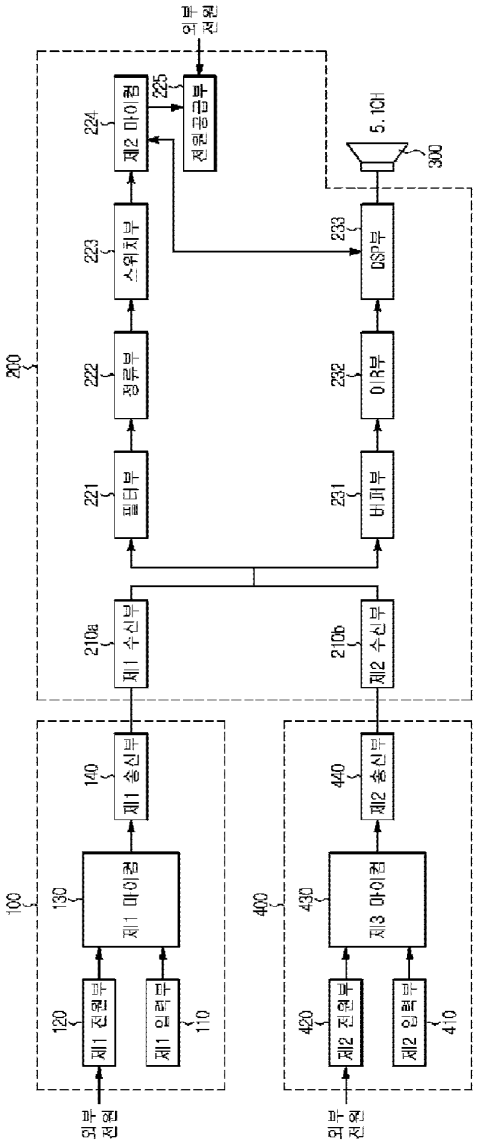
외부 전원
100
120
제1 전원부
제1 입력부
110
130
제1 마이컴
140
제1 송신부
외부 전원
400
420
제2 전원부
제2 입력부
410
430
제3 마이컴
440
제2 송신부
200
210a
제1 수신부
210b
제2 수신부
221
필터부
222
정류부
223
스위치부
224
제2 마이컴
225
전원공급부
231
버퍼부
232
D/A부
233
DSP부
5.1CH
300
외부 전원

【도 3】

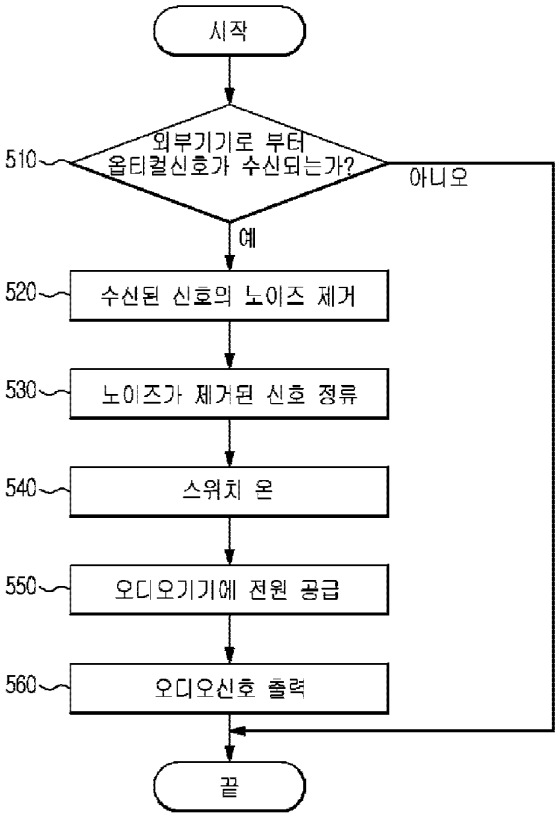
시작
510
외부기기로 부터
옵티컬신호가 수신되는가?
아니오
예
520
수신된 신호의 노이즈 제거
530
노이즈가 제거된 신호 정류
540
스위치 온
550
오디오기기에 전원 공급
560
오디오신호 출력
끝

UNITED STATES PATENT AND TRADEMARK OFFICE

UNITED STATES DEPARTMENT OF COMMERCE
United States Patent and Trademark Office
Address: COMMISSIONER FOR PATENTS
P.O. Box 1450
Alexandria, Virginia 22313-1450
www.uspto.gov

APPLICATION NUMBER	FILING or 371(c) DATE	GRP ART UNIT	FIL FEE REC'D	ATTY.DOCKET.NO	TOT CLAIMS	IND CLAIMS
12/565,909	09/24/2009	2612	2258	103-1339	34	5

CONFIRMATION NO. 1417

REPLACEMENT FILING RECEIPT

38209
Stanzione & Kim, LLP
919 18th Street, NW
Suite 440
Washington, DC 20006

OC000000053126501

Date Mailed: 03/15/2012

Receipt is acknowledged of this non-provisional patent application. The application will be taken up for examination in due course. Applicant will be notified as to the results of the examination. Any correspondence concerning the application must include the following identification information: the U.S. APPLICATION NUMBER, FILING DATE, NAME OF APPLICANT, and TITLE OF INVENTION. Fees transmitted by check or draft are subject to collection. Please verify the accuracy of the data presented on this receipt. **If an error is noted on this Filing Receipt, please submit a written request for a Filing Receipt Correction. Please provide a copy of this Filing Receipt with the changes noted thereon. If you received a "Notice to File Missing Parts" for this application, please submit any corrections to this Filing Receipt with your reply to the Notice. When the USPTO processes the reply to the Notice, the USPTO will generate another Filing Receipt incorporating the requested corrections**

Applicant(s)

Jong Taek YOON, Suwon-si, KOREA, REPUBLIC OF;
Hag Do Kim, Suwon-si, KOREA, REPUBLIC OF;

Assignment For Published Patent Application

Samsung Electronics Co., Ltd, Suwon-si, KOREA, REPUBLIC OF

Power of Attorney: The patent practitioners associated with Customer Number 38209

Domestic Priority data as claimed by applicant

Foreign Applications (You may be eligible to benefit from the **Patent Prosecution Highway** program at the USPTO. Please see http://www.uspto.gov for more information.)
REPUBLIC OF KOREA 10-2009-001234 01/07/2009

Permission to Access - A proper **Authorization to Permit Access to Application by Participating Offices** (PTO/SB/39 or its equivalent) has been received by the USPTO.

Request to Retrieve - This application either claims priority to one or more applications filed in an intellectual property Office that participates in the Priority Document Exchange (PDX) program or contains a proper **Request to Retrieve Electronic Priority Application(s)** (PTO/SB/38 or its equivalent). Consequently, the USPTO will attempt to electronically retrieve these priority documents.

If Required, Foreign Filing License Granted: 10/06/2009

The country code and number of your priority application, to be used for filing abroad under the Paris Convention, is **US 12/565,909**

Projected Publication Date: Not Applicable

Non-Publication Request: No

Early Publication Request: No

Title

AUDIO DEVICE, AV SYSTEM HAVING THE AUDIO DEVICE, AND METHOD TO CONTROL THE AUDIO DEVICE

Preliminary Class

340

PROTECTING YOUR INVENTION OUTSIDE THE UNITED STATES

Since the rights granted by a U.S. patent extend only throughout the territory of the United States and have no effect in a foreign country, an inventor who wishes patent protection in another country must apply for a patent in a specific country or in regional patent offices. Applicants may wish to consider the filing of an international application under the Patent Cooperation Treaty (PCT). An international (PCT) application generally has the same effect as a regular national patent application in each PCT-member country. The PCT process **simplifies** the filing of patent applications on the same invention in member countries, but **does not result** in a grant of "an international patent" and does not eliminate the need of applicants to file additional documents and fees in countries where patent protection is desired.

Almost every country has its own patent law, and a person desiring a patent in a particular country must make an application for patent in that country in accordance with its particular laws. Since the laws of many countries differ in various respects from the patent law of the United States, applicants are advised to seek guidance from specific foreign countries to ensure that patent rights are not lost prematurely.

Applicants also are advised that in the case of inventions made in the United States, the Director of the USPTO must issue a license before applicants can apply for a patent in a foreign country. The filing of a U.S. patent application serves as a request for a foreign filing license. The application's filing receipt contains further information and guidance as to the status of applicant's license for foreign filing.

Applicants may wish to consult the USPTO booklet, "General Information Concerning Patents" (specifically, the section entitled "Treaties and Foreign Patents") for more information on timeframes and deadlines for filing foreign patent applications. The guide is available either by contacting the USPTO Contact Center at 800-786-9199, or it can be viewed on the USPTO website at http://www.uspto.gov/web/offices/pac/doc/general/index.html.

For information on preventing theft of your intellectual property (patents, trademarks and copyrights), you may wish to consult the U.S. Government website, http://www.stopfakes.gov. Part of a Department of Commerce initiative, this website includes self-help "toolkits" giving innovators guidance on how to protect intellectual property in specific countries such as China, Korea and Mexico. For questions regarding patent enforcement issues, applicants may call the U.S. Government hotline at 1-866-999-HALT (1-866-999-4158).

LICENSE FOR FOREIGN FILING UNDER

Title 35, United States Code, Section 184

Title 37, Code of Federal Regulations, 5.11 & 5.15

GRANTED

The applicant has been granted a license under 35 U.S.C. 184, if the phrase "IF REQUIRED, FOREIGN FILING LICENSE GRANTED" followed by a date appears on this form. Such licenses are issued in all applications where the conditions for issuance of a license have been met, regardless of whether or not a license may be required as set forth in 37 CFR 5.15. The scope and limitations of this license are set forth in 37 CFR 5.15(a) unless an earlier license has been issued under 37 CFR 5.15(b). The license is subject to revocation upon written notification. The date indicated is the effective date of the license, unless an earlier license of similar scope has been granted under 37 CFR 5.13 or 5.14.

This license is to be retained by the licensee and may be used at any time on or after the effective date thereof unless it is revoked. This license is automatically transferred to any related applications(s) filed under 37 CFR 1.53(d). This license is not retroactive.

The grant of a license does not in any way lessen the responsibility of a licensee for the security of the subject matter as imposed by any Government contract or the provisions of existing laws relating to espionage and the national security or the export of technical data. Licensees should apprise themselves of current regulations especially with respect to certain countries, of other agencies, particularly the Office of Defense Trade Controls, Department of State (with respect to Arms, Munitions and Implements of War (22 CFR 121-128)); the Bureau of Industry and Security, Department of Commerce (15 CFR parts 730-774); the Office of Foreign AssetsControl, Department of Treasury (31 CFR Parts 500+) and the Department of Energy.

NOT GRANTED

No license under 35 U.S.C. 184 has been granted at this time, if the phrase "IF REQUIRED, FOREIGN FILING LICENSE GRANTED" DOES NOT appear on this form. Applicant may still petition for a license under 37 CFR 5.12, if a license is desired before the expiration of 6 months from the filing date of the application. If 6 months has lapsed from the filing date of this application and the licensee has not received any indication of a secrecy order under 35 U.S.C. 181, the licensee may foreign file the application pursuant to 37 CFR 5.15(b).

SelectUSA

The United States represents the largest, most dynamic marketplace in the world and is an unparalleled location for business investment, innovation and commercialization of new technologies. The USA offers tremendous resources and advantages for those who invest and manufacture goods here. Through SelectUSA, our nation works to encourage, facilitate, and accelerate business investment. To learn more about why the USA is the best country in the world to develop technology, manufacture products, and grow your business, visit SelectUSA.gov.

Doc Code: PD.REQ.RETR

PTO/SB/38 (11-08)
Approved for use through 12/31/2008. OMB 0651-0031
U.S. Patent and Trademark Office; U.S. DEPARTMENT OF COMMERCE
Under the Paperwork Reduction Act of 1995, no persons are required to respond to a collection of information unless it displays a valid OMB control number.

Request to Retrieve Electronic Priority Application(s)

Send completed form to: Commissioner for Patents
P.O. Box 1450, Alexandria, VA 22313-1450

COMPLETE IF KNOWN	
Application Number	12/565,909
Filing Date	September 24, 2009
First Named Inventor	Jong Taek YOON, et al.
Art Unit	2612
Examiner Name	Son M. Tang
Attorney Docket Number	103-1339

The undersigned hereby requests the USPTO retrieve an electronic copy of each of the following foreign applications for which benefit has been claimed under 35 U.S.C. 119(a)-(d) from a foreign intellectual property office participating with the USPTO in a bilateral or multilateral priority document exchange agreement:

Please retrieve *(check all that apply)*

☑ The following applications originally filed in participating offices (only list the Participating Office and the Participating Office Application Number (columns 1 and 2 below)):

☐ The following applications originally filed in non-participating offices (must list the information for all three columns below):

1. Participating Office with which the Priority Application, or the Copy, was filed (e.g., EPO)	**2. Participating Office Application Number in which the Priority Application, or a Copy, was filed (e.g., 03101432)**		**3. Non-Participating Office Application Number (Priority Application), if applicable**	
	App. No.	**Filing Date**	**Office**	**App. No.**
1. KIPO	10-2009-001234	January 7, 2009		
2.				
3.				
4.				
5.				
6.				

This Request to Retrieve Electronic Priority Application(s) (Request) should be filed within the later of four months from the date of filing the above-identified application claiming foreign priority, or sixteen months from the filing date of the foreign application to which priority is claimed.

This Request should be submitted concurrently with the claim for priority, or thereafter. The USPTO will not attempt to retrieve the identified priority application(s) until applicant identifies the indicated priority application(s) on the oath or declaration or an application data sheet in compliance with 37 CFR 1.63(c).

Applicants are advised to consult Private PAIR (accessed through www.uspto.gov) to assure that the retrieval has been successful. The applicant remains ultimately responsible for the submission of the certified copy of the foreign application(s) within the period set forth in 37 CFR 1.55(a) (before the U.S. application issues as a patent) if the USPTO does not timely retrieve the identified priority application(s).

I hereby declare that I have the authority to grant access to the above-identified applications.

/Patrick Stanzione/	March 13, 2012
Signature	Date
Patrick Stanzione	202-775-1900
Printed or Typed Name	Telephone Number
Partner	40,434
Title	Registration Number, if applicable

This collection of information is required by 37 CFR 1.55(d). The information is required to obtain or retain a benefit by the public which is to file (and by the USPTO to process an application). Confidentiality is governed by 35 U.S.C. 122 and 37 CFR 1.11 and 1.14. This collection is estimated to take 8 minutes to complete, including gathering, preparing, and submitting the completed application form to the USPTO. Time will vary depending upon the individual case. Any comments on the amount of time you require to complete this form and/or suggestions for reducing this burden, should be sent to the Chief Information Officer, U.S. Patent and Trademark Office, U.S. Department of Commerce, P.O. Box 1450, Alexandria, VA 22313-1450. DO NOT SEND FEES OR COMPLETED FORMS TO THIS ADDRESS. **SEND TO: Commissioner for Patents, P.O. Box 1450, Alexandria, VA 22313-1450.**

If you need assistance in completing the form, call 1-800-PTO-9199 and select option 2.

Privacy Act Statement

The **Privacy Act of 1974 (P.L. 93-579)** requires that you be given certain information in connection with your submission of the attached form related to a patent application or patent. Accordingly, pursuant to the requirements of the Act, please be advised that: (1) the general authority for the collection of this information is 35 U.S.C. 2(b)(2); (2) furnishing of the information solicited is voluntary; and (3) the principal purpose for which the information is used by the U.S. Patent and Trademark Office is to process and/or examine your submission related to a patent application or patent. If you do not furnish the requested information, the U.S. Patent and Trademark Office may not be able to process and/or examine your submission, which may result in termination of proceedings or abandonment of the application or expiration of the patent.

The information provided by you in this form will be subject to the following routine uses:

1. The information on this form will be treated confidentially to the extent allowed under the Freedom of Information Act (5 U.S.C. 552) and the Privacy Act (5 U.S.C 552a). Records from this system of records may be disclosed to the Department of Justice to determine whether disclosure of these records is required by the Freedom of Information Act.
2. A record from this system of records may be disclosed, as a routine use, in the course of presenting evidence to a court, magistrate, or administrative tribunal, including disclosures to opposing counsel in the course of settlement negotiations.
3. A record in this system of records may be disclosed, as a routine use, to a Member of Congress submitting a request involving an individual, to whom the record pertains, when the individual has requested assistance from the Member with respect to the subject matter of the record.
4. A record in this system of records may be disclosed, as a routine use, to a contractor of the Agency having need for the information in order to perform a contract. Recipients of information shall be required to comply with the requirements of the Privacy Act of 1974, as amended, pursuant to 5 U.S.C. 552a(m).
5. A record related to an International Application filed under the Patent Cooperation Treaty in this system of records may be disclosed, as a routine use, to the International Bureau of the World Intellectual Property Organization, pursuant to the Patent Cooperation Treaty.
6. A record in this system of records may be disclosed, as a routine use, to another federal agency for purposes of National Security review (35 U.S.C. 181) and for review pursuant to the Atomic Energy Act (42 U.S.C. 218(c)).
7. A record from this system of records may be disclosed, as a routine use, to the Administrator, General Services, or his/her designee, during an inspection of records conducted by GSA as part of that agency's responsibility to recommend improvements in records management practices and programs, under authority of 44 U.S.C. 2904 and 2906. Such disclosure shall be made in accordance with the GSA regulations governing inspection of records for this purpose, and any other relevant (*i.e.*, GSA or Commerce) directive. Such disclosure shall not be used to make determinations about individuals.
8. A record from this system of records may be disclosed, as a routine use, to the public after either publication of the application pursuant to 35 U.S.C. 122(b) or issuance of a patent pursuant to 35 U.S.C. 151. Further, a record may be disclosed, subject to the limitations of 37 CFR 1.14, as a routine use, to the public if the record was filed in an application which became abandoned or in which the proceedings were terminated and which application is referenced by either a published application, an application open to public inspection or an issued patent.
9. A record from this system of records may be disclosed, as a routine use, to a Federal, State, or local law enforcement agency, if the USPTO becomes aware of a violation or potential violation of law or regulation.

Electronic Acknowledgement Receipt

EFS ID:	12291726
Application Number:	12565909
International Application Number:	
Confirmation Number:	1417
Title of Invention:	AUDIO DEVICE, AV SYSTEM HAVING THE AUDIO DEVICE, AND METHOD TO CONTROL THE AUDIO DEVICE
First Named Inventor/Applicant Name:	Jong Taek YOON
Customer Number:	38209
Filer:	Patrick J. Stanzione/Teresa Perry
Filer Authorized By:	Patrick J. Stanzione
Attorney Docket Number:	103-1339
Receipt Date:	13-MAR-2012
Filing Date:	24-SEP-2009
Time Stamp:	15:31:25
Application Type:	Utility under 35 USC 111(a)

Payment information:

Submitted with Payment	no

File Listing:

Document Number	Document Description	File Name	File Size(Bytes)/ Message Digest	Multi Part /.zip	Pages (if appl.)
1		Amend_03-13-12.pdf	605019 3614d74f27413c6b99aa213a047e25db78282f29	yes	16

	Multipart Description/PDF files in .zip description		
	Document Description	**Start**	**End**
	Amendment/Req. Reconsideration-After Non-Final Reject	1	1
	Claims	2	6
	Applicant Arguments/Remarks Made in an Amendment	7	16

Warnings:

Information:

2	Request for USPTO to retrieve priority docs	SB38_03-13-12.pdf	169993 16aa59ce87e7999e385c64781078f25e7b7f11eb	no	2

Warnings:

Information:

Total Files Size (in bytes):	775012

This Acknowledgement Receipt evidences receipt on the noted date by the USPTO of the indicated documents, characterized by the applicant, and including page counts, where applicable. It serves as evidence of receipt similar to a Post Card, as described in MPEP 503.

<u>New Applications Under 35 U.S.C. 111</u>
If a new application is being filed and the application includes the necessary components for a filing date (see 37 CFR 1.53(b)-(d) and MPEP 506), a Filing Receipt (37 CFR 1.54) will be issued in due course and the date shown on this Acknowledgement Receipt will establish the filing date of the application.

<u>National Stage of an International Application under 35 U.S.C. 371</u>
If a timely submission to enter the national stage of an international application is compliant with the conditions of 35 U.S.C. 371 and other applicable requirements a Form PCT/DO/EO/903 indicating acceptance of the application as a national stage submission under 35 U.S.C. 371 will be issued in addition to the Filing Receipt, in due course.

<u>New International Application Filed with the USPTO as a Receiving Office</u>
If a new international application is being filed and the international application includes the necessary components for an international filing date (see PCT Article 11 and MPEP 1810), a Notification of the International Application Number and of the International Filing Date (Form PCT/RO/105) will be issued in due course, subject to prescriptions concerning national security, and the date shown on this Acknowledgement Receipt will establish the international filing date of the application.

Docket No.: 103-1339

IN THE UNITED STATES PATENT AND TRADEMARK OFFICE

In re Patent Application of:

Jong Taek YOON, et al.

Application No.:	12/565,909	Group Art Unit:	2612
Filed:	September 24, 2009	Examiner:	Son M. Tang
Customer No.:	38209	Confirmation No.:	1417

For: AUDIO DEVICE, AV SYSTEM HAVING THE AUDIO DEVICE, AND METHOD to CONTROL THE AUDIO DEVICE

Commissioner of Patents and Trademarks
P.O. Box 1450
Alexandria, VA 22313-1450

AMENDMENT

Sir:

In response to the Office Action mailed December 13, 2011, please enter this Amendment in the above-identified application as follows:

Amendments to the Claims are reflected in the listing of claims which begins on page 2 of this paper.

Remarks begin on page 7 of this paper.

Amendments to the Claims

The listing of claims will replace all prior versions, and listings, of claims in the application:

Listing of Claims:

1. (Currently Amended) An audio device comprising:

a receiver connected to a transmitter of an external device to receive a signal from the external device;

a switch to turn on in response to the received signal; and

a microcomputer to control power supply and audio output upon receipt of an on-signal from the switch~~according to whether the signal is received~~.

2. (Original) The audio device according to claim 1, wherein the receiver includes an optical port.

3. (Original) The audio device according to claim 1, wherein the signal is an optical signal including a clock signal and an audio signal.

4. (Original) The audio device according to claim 1, further comprising a filter to cancel noise from the signal.

5. (Original) The audio device according to claim 4, further comprising a rectifier to rectify the noise-cancelled signal.

6. (Cancelled)

7. (Cancelled)

8. (Currently Amended) An Audio/Visual (AV) system comprising:

an external device having a transmitter to output a signal upon receipt of power; and

an audio device having a receiver to receive the signal, a switch to turn on in response

to the received signal, and a microcomputer to control power supply and audio output upon receipt of an on-signal from the switch~~according to whether the signal is received~~.

9. (Original) The AV system according to claim 8, wherein each of the transmitter of the external device and the receiver of the audio device includes an optical port and the transmitter communicates with the receiver by optical communications.

10. (Original) The AV system according to claim 8, wherein the external device is a video device and/or an AV source device.

11. (Original) The AV system according to claim 8, wherein the audio device further includes one or more speakers to output audio signals of one or more channels, and an AV receiver and/or an amplifier.

12. (Currently Amended) The AV system according to claim 11, wherein the audio device further includes a filter to cancel noise from the signal, and a rectifier to rectify the noise-cancelled signal and apply the rectified signal to the switch in order to turn on the switch~~, and a switch to turn on upon receipt of the rectified signal~~.

13. (Currently Amended) A method of controlling an audio device, the method comprising:

turning on a switch in response to a signal received from an external device;

~~determining whether a signal is received from an external device;~~ and

controlling power supply and audio output of the audio device upon receipt of an on-signal from the receiver ~~according to whether the signal is received~~.

14. (Original) The method according to claim 13, wherein the signal is received from the external device in response to power being applied to the external device.

15. (Original) The method according to claim 14, wherein the signal is received by optical communications.

16. (Original) The method according to claim 15, wherein the signal is an optical signal including a clock signal and an audio signal.

17. (Original) The method according to claim 13, further comprising:
canceling noise from the signal in response to the signal being received;
rectifying the noise-cancelled signal; and
turning on a switch based on the rectified signal.

18. (Cancelled)

19. (Currently Amended) A device comprising:
a receiver to receive a signal from an external source;
a switch to turn on in response to the received signal, and
a controller to control an on/off state and an output of the device according to an on/off signal received from the switch ~~according to the received signal~~.

20. (Original) The device of claim 19, wherein the output of the device includes one or more audio signals.

21. (Original) The device of claim 19, wherein the received signal includes an audio component.

22. (Original) The device of claim 19, wherein the received signal is an optical signal.

23. (Original) The device of claim 19, wherein the receiver includes a connection port to connect to the external source.

24. (Original) The device of claim 23, wherein the receiver communicates with the external source through a wireless connection.

25. (Original) The device of claim 19, wherein the controller controls the device to be turned on in response to receiving the signal.

26. (Original) The device of claim 19, wherein the controller controls the device to be turned off in response to termination of the received signal.

27. (Currently Amended) A method of controlling a device, the method comprising:

turning on/off a switch according to a received signal; and

controlling an on/off state and an output of the device according to an on/off signal received from the switch ~~according to a received signal~~.

28. (Original) The method of claim 27, wherein the output of the device includes one or more audio signals.

29. (Original) The method of claim 27, wherein the received signal includes an audio component.

30. (Original) The method of claim 27, wherein the received signal is an optical signal.

31. (Original) The method of claim 27, further comprising:

receiving the received signal through a wired connection.

32. (Original) The method of claim 27, further comprising:

receiving the received signal through a wireless connection.

33. (Original) The method of claim 27, wherein the controlling the on/off state of the device comprises:

turning the device on in response to receiving the received signal

34. (Original) The method of claim 27, wherein the controlling the on/off state of the device comprises:

turning the device off in response to termination of the received signal.

REMARKS

Introduction

Applicant notes with appreciation the Examiner's indication that each of the references cited in the Information Disclosure Statement of September 24, 2009 and April 26, 2010 have been considered.

Upon entry of the foregoing amendment, claims 1-34 are pending in the application. Claims 1, 8, 12, 13, 19, and 27 have been amended. Claims 6, 7, and 18 have been cancelled. No new matter is being presented. In view of the following remarks, reconsideration and allowance of all the pending claims are requested.

Priority Under 35 U.S.C. § 119

The Examiner has not acknowledged Applicants' claim for foreign priority under 35 U.S.C. § 119, and indicates that the Examiner has not received certified copies of the priority documents.

Applicants submit herewith a PTO/SB/38 listing the foreign priority document (KR 10-2009-001234) to request the U.S. Patent & Trademark Office to retrieve the foreign priority document. Applicants also submit herewith an Application Data Sheet listing the foreign priority document (KR 10-2009-001234). Accordingly, retrieval of the foreign priority document is respectfully requested.

Rejection under 35 USC §102

Claims 1-3, 8-11, 13-16, 19-23, 25-31, and 33-34 have been rejected under 35 U.S.C. §102(b) as being anticipated by Yang et al. (U.S. Patent No. 6,690,431; hereafter,. Yang). Applicants respectfully request reconsideration and withdrawal of this rejection for at least the following reasons.

Independent claims 1, 8, 13, 19, and 27

The Examiner submitted that "Yang discloses a method of controlling a device, and the device is an audio/video (AV) amplifier system comprising, an external device (e.g., CD, VCD, LD, DVD, VTR) inherently includes a signal transmitter to output a signal upon receipt of power

signal from user, the external device (e.g., CD) connected to the AV amplifier system (Fig. 2) having an audio receiver (701¸702, 703, and 102) to receive the signal and a microcomputer (CPU 3) to control power supply and audio output according to whether the signal is received [see Figs. 2-6, col 5, lines 15-67 and col. 6, lines 1-25]." Applicants respectfully disagree.

While the Examiner states that the system inherently includes a signal transmitter to output a signal upon receipt of a power signal from the user, it is respectfully pointed out that "Inherency however, may not be established by probabilities or possibilities. The mere fact that a certain thing may result from a given set of circumstances is not sufficient." In re Robertson, 169 F. 3d 743, 745, 49 USPQ2d 1949, 1950-51 (Fed, Cir. 1999) (citations omitted). That is, the Examiner appears to be suggesting a possibility (not supported by facts) that there is a signal transmitter to output a signal upon receipt of a power signal from a user, the external device connected to the AV amplifier system having an audio receiver to receive the signal and a microcomputer to control power supply and audio output according to whether the signal is received, would make such a signal transmitter inherent. It is respectfully submitted that a *possibility* of a signal transmitter does not make such a signal transmitter inherent. Further, in the event that the Office Action is relying on the theory of inherency in any manner, "the Examiner must provide a basis in fact and/or technical reasoning to reasonably support the determination that the allegedly inherent characteristic necessarily flows from the teachings of the applied art." Ex parte Levy, 17 USPQ2d 1461, 1464 (Bd. Pat. App. & Inter. 1990) (emphasis in original). See also MPEP 2112. Accordingly, since Yang does not teach or suggest each of the features recited in claims 1-3, 8-11, 13-16, 19-23, 25-31, and 33-34, it is respectfully submitted that this document cannot be properly used to reject these claims as submitted in the Office action mailed December 13, 2011.

Yang describes a switch/ AV signal receiver that receives a signal from program sources, sends the signal to 1) a signal detecting circuit or an A/D followed by a digital signal receiver and also sends the received signal to 2) an AV processing circuit for post processing. The signal detecting circuit or digital signal analyzer determines whether the received signal is larger than a threshold value, and outputs a high/low signal to the CPU. That is, if the signal output is high, it means no signal is output, and if the signal is low, it means that a signal has been received. The CPU repeats the detection operation until the output of the signal is high, meaning that signals are no longer being received, and after ten minutes of no signal being

received, the CPU turns off the main power to the switch/receiver. (see col. 2, line 43 through col. 6, line 2). Hence, Yang does not teach or suggest controlling the power supply and audio output according to whether the signal is received, but rather Yang is required to compare a received signal with a threshold signal and, then, based on the comparison, turn on/off the power and the audio output.

More specifically, Yang describes an audio/video amplifier that requires a comparison circuit that compares a received signal with a threshold value to determine whether a value of the signal is at a certain predetermined level, and then determines whether to send a signal to the CPU to indicate to the CPU that the power supply and audio device should be activated or to send a signal to the CPU to indicate to the CPU that the power supply and audio device should not be activated. That is, in embodiment one (see col. 2, line 41 through col. 4, line 53) of Yang, one of two approaches may be adopted. First, ten sampling values may be obtained and compared with two adjacent average values. If the difference between two average values is larger than an experimental threshold value, the digital signal analyzer judges that the signals are input. Second, an average value may be determined over ten sampling values. If all of the adjacent five average values are larger than an experimental threshold value, the digital signal analyzer judges that there are input AV values. In a second embodiment (see col. 4, line 55 through col. 5, line 35) of Yang, the comparison circuit is a signal detecting circuit, for example, a comparator and diodes, which identifies and compares signals so that when an amplitude of an input signal is larger than a threshold value, the comparison circuit judges that a signal has been received. In embodiment three (see col. 5, line 36 through col. 6, line 25) of Yang, the digital signal receiver produces various format-identifying signals to the signal identifying/comparing module and outputs a corresponding identifying signal to the microprocessor. Thus, all embodiments of Yang require a comparison circuit that processes a received signal and compares the signal with a threshold value in order to determine whether to indicate to the CPU that power and an audio device should be activated. In contrast, the present inventive concept does not require a comparison circuit or a threshold value for a signal, but rather controls a power supply and audio output according to whether the signal is received.

Hence, Yang does not teach or suggest controlling the power supply and audio output according to whether the signal is received, but rather compares a received signal with a

threshold value and turns on/off the power and the audio output based on that comparison.

Thus, Yang fails to teach or suggest, among other things:

"a microcomputer to control power supply and audio output according to whether the signal is received," as is recited in independent claim 1;

"an audio device having a receiver to receive the signal and a microcomputer to control power supply and audio output according to whether the signal is received," as is recited in independent claim 8;

"controlling power supply and audio output of the audio device according to whether the signal is received.," as is recited in independent claim 13;

"a controller to control an on/off state and an output of the device according to the received signal," as is recited in independent claim 19; and/or

"controlling an on/off state and an output of the device according to a received signal," as is recited in independent claim 27.

However, independent claims 1, 8, 13, 19 and 27 have been amended to further include a configuration of a switch, wherein the switch is automatically turned on in response to receiving a signal from an external device. This amendment is supported by the specification (see paragraphs [0056]-[0057]). As is set forth in the specification, in response to a voltage in the signal received from the external device, the switch 223 turns on and provides an on-signal to a microcomputer. Upon receipt of the on-signal from the switch 223, the microcomputer controls the power supply 225 to supply operation power to each component.

Hence, Yang also does not disclose a switch of the present general inventive concept that turns on in response to receiving a signal from an external device, as presently recited in the independent claims.

It is well established that "[a] claim is anticipated only if each and every element as set forth in the claim is found, either expressly or inherently described, in a single prior art reference." Verdegaal Bros. v. Union Oil Co. of California, 814 F.2d 628, 631, 2 USPQ2d 1051, 1053 (Fed. Cir. 1987). The identical invention must be shown in as complete detail as contained in the…claim." Richardson v. Suzuki Motor Co., 868 F.2d 1226, 1236, 9 USPQ2d 1913, 1920

(Fed. Cir. 1989). "The elements must be arranged as required by the claim..." In re Bond, 910 F.2d 831, 15 USPQ2d 1566 (Fed. Cir. 1990). Accordingly, since Yang does not teach or disclose all of the elements set forth in amended independent claims 1, 8, 13, 19, and 27, these claims are patentably distinguishable from Yang. Thus, Yang cannot be properly used to reject amended independent claims 1, 8, 13, 19, and 27 under 35 U.S.C. §102(b) as submitted in the Office action mailed on December 13, 2011, and withdrawal of this rejection and allowance of these claims are respectfully solicited.

Dependent claims 2-3, 9-11, 14-16, 20-23, 25, 26, 28-31, and 33-34

With respect to claims 2-3, 9-11, 14-16, 20-23, 25, 26, 28-31, and 33-34, it is respectfully submitted that for at least the reasons that claims 2-3, 9-11, 14-16, 20-23, 25, 26, 28-31, and 33-34 depend from amended independent claims 1, 8, 13, 19, and 27, respectively, which are patentably distinguishable from Yang for at least the reasons provided above, and therefore contain each of the features as recited in the reasons provided above, and therefore each contains each of the features as recited in their respective amended independent claims, dependent claims 2-3, 9-11, 14-16, 20-23, 25, 26, 28-31, and 33-34 are also patentably distinguishable from Yang and withdrawal of these rejections and allowance of these claims are respectfully solicited.

Rejection under 35 USC §103

Claims 4-7, 12, and 17-18 have been rejected under 35 U.S.C. §103(a) as being unpatentable over Yang in view of Bergman et al. (U.S. Publication No. 2009/022,552,8). Applicants respectfully request reconsideration and withdrawal of this rejection for at least the following reasons.

As noted above, Yang fails to teach or suggest controlling the power supply and audio output according to whether the signal is received, as is done in independent claims 1, 8, and 13 of the present inventive concept.

Although the Examiner submits that "it is obvious to one having ordinary skill in the art at the time the invention was made, to implement a noise filter, rectifier and power switch as taught

by Bergman with the AV processing circuit of Yang, the implement would yield a predictable results, the resulted would improve the system, because most receiving signal from other device is not noise free, which needs to filter for more accuracy," it is respectfully submitted that Bergman points out that there are typical drawbacks to using a digital switching power supply, so that Applicants respectfully submit that it would not be obvious to utilize Bergman's noise filter, rectifier and power switch in independent claims 1, 8 and 13 of the present inventive concept. That is, Bergman discloses, [0021], "the typical drawback of using a digital switching power supply is that it tends to create a lot of digital noise (both radiated and conducted) which can interfere with sensitive electronics and, in particular, audio quality." In addition, Bergman discloses a switching power supply, but does not disclose controlling a power supply and audio output according to whether the signal is received. Hence, it is respectfully submitted that it would not have been obvious to combine Bergman's noise filter, rectifier and power switch with Yang's amplifier because Yang is arranged to judge differences between sampling signals and experimental threshold values, a system in which introduction of more noise could be detrimental, and further, even if combined, Yang and Bergman do not teach or suggest controlling the power supply and audio output according to whether the signal is received, as is done in the present inventive concept.

However, independent claims 1, 8, and 13 have been amended to include a configuration of a switch, wherein the switch is automatically turned on in response to receiving a signal from an external device. This amendment is supported by the specification (see paragraphs [0056]-[0057]). As is set forth in the specification, in response to a voltage in the signal received from the external device, the switch 223 turns on and provides an on-signal to a microcomputer. Upon receipt of the on-signal from the switch 223, the microcomputer controls the power supply 225 to supply operation power to each component.

Although the switching power supply 200 of Bergman generates an operation voltage of 25 V DC or 10 V DC to each component and supplies the generated operation voltage to each component through switching, as disclosed in paragraphs [0025]-[0028] of Bergman, Bergman describes a switching power supply 200 without disclosing the switch of the present general inventive concept that turns on in response to receiving a signal from an external device.

Hence, the combination of Yang and Bergman fails to teach or suggest, among other

things:

"a microcomputer to control power supply and audio output according to whether the signal is received," as is recited in independent claim 1;

"a microcomputer to control power supply and audio output according to whether the signal is received," as is recited in independent calm 8; and/or

"controlling power supply and audio output of the audio device according to whether the signal is received," as is recited in independent claim 13.

Hence, the combination of Yang and Bergman fails to teach or suggest all the limitations recited in independent claims 1, 8, and 13. Accordingly, Applicants respectfully submit that the Examiner has not met the burden of establishing a prima facie case of obviousness as set forth in MPEP § 2143.03, portions of which are cited as follows: "To establish *prima facie* obviousness of a claimed invention, all the claim limitations must be taught or suggested by the prior art. *In re Royka*, 490 F.2d 981, 180 USPQ 580 (CCPA 1974). "All words in a claim must be considered in judging the patentability of that claim against the prior art." *In re Wilson*, 424 F.2d 1382, 1385, 165 USPQ 494, 496 (CCPA 1970). Thus, Applicants respectfully request that Yang and Bergman cannot be properly used to reject amended independent claims 1, 8 and 13 under 35 U.S.C. §103(a). Accordingly, if an independent claim is nonobvious under 35 U.S.C. 103, then any claim depending therefrom is nonobvious. *In re Fine*, 837 F.2d 1071, 5 USPQ2d 1596 (Fed. Cir. 1988)." With respect to claims 4-7, 12, and 17-18, it is respectfully submitted that for at least the reasons that claims 4-7, 12, and 17-18 depend from amended independent claims 1, 8, and 13, respectively, which are patentably distinguishable from Yang and Bergman for at least the reasons provided above, and therefore contain each of the features as recited in amended independent claims 1, 8 and 13, dependent claims 4-7, 12, and 17-18 are also patentably distinguishable from Yang and Bergman, and withdrawal of these rejections and allowance of these claims are respectfully solicited.

Claims 24 and 32 have been rejected under 35 U.S.C. §103(a) as being unpatentable over Yang in view of Holmgren et al. (U.S. Patent No. 8,024,055; hereafter, Holmgren). Applicants respectfully request reconsideration and withdrawal of these rejections for at least the following reasons.

As noted above, Yang fails to teach or suggest controlling the power supply and audio output according to whether the signal is received, as is done in the present inventive concept.

Although the Examiner submits that "One having ordinary skill artisan would found it obvious to apply an alternative technology such as wireless connection as suggested by Holmgren, with the system of Yang, for the benefit of at least convenience to use and less labor for installation," it is respectfully submitted that Holmgren discloses controlling one or more audio amplifiers in or associated with a device coupled on a local area network and receiving at least one selected source from other devices also coupled on the network, wherein an automatic shutdown control module is provided in the device to power down the audio amplifiers when there is no audio data flow coming to the device or power up the audio amplifies when there is audio data flow coming to the device and the powering down or powering up the amplifiers is <u>in accordance with a hysteresis</u>, being lagging of an effect behind its cause, to protect the amplifiers. Hence, Holmgren discloses a hysteresis-based powering-up and down system and fails to teach or suggest "a controller to control an on/off state and an output of the device according to the received signal," as is recited in independent claim 19 or "controlling an on/off state and an output of the device according to a received signal," as is recited in independent claim 27.

However, independent claims 19 and 27 have been amended to include a configuration of a switch, wherein the switch is automatically turned on in response to receiving a signal from an external device. This amendment is supported by the specification (see paragraphs [0056]-[0057]). As is set forth in the specification, in response to a voltage in the signal received from the external device, the switch 223 turns on and provides an on-signal to a microcomputer. Upon receipt of the on-signal from the switch 223, the microcomputer controls the power supply 225 to supply operation power to each component.

Holmgren does not disclose the switch of the present general inventive concept.

Accordingly, since Yang and Holmgren do not teach or disclose all of the elements set forth in amended independent claims 19 and 27, these claims are patentably distinguishable from Yang and Holmgren. Thus, Yang and Holmgren cannot be properly used to reject amended independent claims 19 and 27 under 35 U.S.C. §103(a), and with respect to claims 24 and 32, it is respectfully submitted that for at least the reasons that claims 24 and 32 depend

from amended independent claims 19 and 27, respectively, which are patentably distinguishable from the combination of Yang and Holmgren for at least the reasons provided above, and therefore contain each of the features as recited in the reasons provided above, and therefore each contains each of the features as recited in their respective amended independent claims, dependent claims 24 and 32 are also patentably distinguishable from the combination of Yang and Holmgren and withdrawal of these rejections and allowance of these claims are respectfully solicited.

Conclusion

It is respectfully submitted that a full and complete response has been made to the outstanding Office Action and, as such, there being no other objections or rejections, this application is in condition for allowance, and a notice to this effect is earnestly solicited.

If the Examiner believes, for any reason, that personal communication will expedite prosecution of this application, the Examiner is invited to telephone the undersigned at the number provided below.

If any further fees are required in connection with the filing of this amendment, please charge the same to our Deposit Account No. 502827.

Respectfully submitted,

STANZIONE & KIM, LLP

Dated: March 13, 2012

919 18th St., NW, Suite 440
Washington, DC 20006
Telephone: (202) 775-1900
Facsimile: (202) 775-1901

By: /Darleen J. Stockley/
Darleen J. Stockley
Registration No. 34,257

PTO/SB/06 (07-06)
Approved for use through 1/31/2007. OMB 0651-0032
U.S. Patent and Trademark Office; U.S. DEPARTMENT OF COMMERCE
Under the Paperwork Reduction Act of 1995, no persons are required to respond to a collection of information unless it displays a valid OMB control number.

PATENT APPLICATION FEE DETERMINATION RECORD

Substitute for Form PTO-875

Application or Docket Number	Filing Date	☐ To be Mailed
12/565,909	09/24/2009	

APPLICATION AS FILED – PART I

FOR	(Column 1) NUMBER FILED	(Column 2) NUMBER EXTRA	SMALL ENTITY ☐ RATE ($)	SMALL ENTITY FEE ($)	OR	OTHER THAN SMALL ENTITY RATE ($)	OTHER THAN SMALL ENTITY FEE ($)
☐ BASIC FEE (37 CFR 1.16(a), (b), or (c))	N/A	N/A	N/A			N/A	
☐ SEARCH FEE (37 CFR 1.16(k), (i), or (m))	N/A	N/A	N/A			N/A	
☐ EXAMINATION FEE (37 CFR 1.16(o), (p), or (q))	N/A	N/A	N/A			N/A	
TOTAL CLAIMS (37 CFR 1.16(i))	minus 20 =	*	X $ =		OR	X $ =	
INDEPENDENT CLAIMS (37 CFR 1.16(h))	minus 3 =	*	X $ =			X $ =	
☐ APPLICATION SIZE FEE (37 CFR 1.16(s))	If the specification and drawings exceed 100 sheets of paper, the application size fee due is $250 ($125 for small entity) for each additional 50 sheets or fraction thereof. See 35 U.S.C. 41(a)(1)(G) and 37 CFR 1.16(s).						
☐ MULTIPLE DEPENDENT CLAIM PRESENT (37 CFR 1.16(j))							
* If the difference in column 1 is less than zero, enter "0" in column 2.			TOTAL			TOTAL	

APPLICATION AS AMENDED – PART II

AMENDMENT 03/13/2012

	(Column 1) CLAIMS REMAINING AFTER AMENDMENT		(Column 2) HIGHEST NUMBER PREVIOUSLY PAID FOR	(Column 3) PRESENT EXTRA	SMALL ENTITY RATE ($)	SMALL ENTITY ADDITIONAL FEE ($)	OR	OTHER THAN SMALL ENTITY RATE ($)	OTHER THAN SMALL ENTITY ADDITIONAL FEE ($)
Total (37 CFR 1.16(i))	* 24	Minus	** 34	= 0	X $ =		OR	X $60=	0
Independent (37 CFR 1.16(h))	* 5	Minus	***5	= 0	X $ =		OR	X $250=	0
☐ Application Size Fee (37 CFR 1.16(s))									
☐ FIRST PRESENTATION OF MULTIPLE DEPENDENT CLAIM (37 CFR 1.16(j))							OR		
					TOTAL ADD'L FEE		OR	TOTAL ADD'L FEE	0

AMENDMENT

	(Column 1) CLAIMS REMAINING AFTER AMENDMENT		(Column 2) HIGHEST NUMBER PREVIOUSLY PAID FOR	(Column 3) PRESENT EXTRA	RATE ($)	ADDITIONAL FEE ($)		RATE ($)	ADDITIONAL FEE ($)
Total (37 CFR 1.16(i))	*	Minus	**	=	X $ =		OR	X $ =	
Independent (37 CFR 1.16(h))	*	Minus	***	=	X $ =		OR	X $ =	
☐ Application Size Fee (37 CFR 1.16(s))									
☐ FIRST PRESENTATION OF MULTIPLE DEPENDENT CLAIM (37 CFR 1.16(j))							OR		
					TOTAL ADD'L FEE		OR	TOTAL ADD'L FEE	

* If the entry in column 1 is less than the entry in column 2, write "0" in column 3.

** If the "Highest Number Previously Paid For" IN THIS SPACE is less than 20, enter "20".

*** If the "Highest Number Previously Paid For" IN THIS SPACE is less than 3, enter "3".

The "Highest Number Previously Paid For" (Total or Independent) is the highest number found in the appropriate box in column 1.

Legal Instrument Examiner:
/LAWANDA MILTON/

This collection of information is required by 37 CFR 1.16. The information is required to obtain or retain a benefit by the public which is to file (and by the USPTO to process) an application. Confidentiality is governed by 35 U.S.C. 122 and 37 CFR 1.14. This collection is estimated to take 12 minutes to complete, including gathering, preparing, and submitting the completed application form to the USPTO. Time will vary depending upon the individual case. Any comments on the amount of time you require to complete this form and/or suggestions for reducing this burden, should be sent to the Chief Information Officer, U.S. Patent and Trademark Office, U.S. Department of Commerce, P.O. Box 1450, Alexandria, VA 22313-1450. DO NOT SEND FEES OR COMPLETED FORMS TO THIS ADDRESS. **SEND TO: Commissioner for Patents, P.O. Box 1450, Alexandria, VA 22313-1450.**

If you need assistance in completing the form, call 1-800-PTO-9199 and select option 2.

UNITED STATES PATENT AND TRADEMARK OFFICE

UNITED STATES DEPARTMENT OF COMMERCE
United States Patent and Trademark Office
Address: COMMISSIONER FOR PATENTS
P.O. Box 1450
Alexandria, Virginia 22313-1450
www.uspto.gov

APPLICATION NO.	FILING DATE	FIRST NAMED INVENTOR	ATTORNEY DOCKET NO.	CONFIRMATION NO.
12/565,909	09/24/2009	Jong Taek YOON	103-1339	1417

38209 7590 12/13/2011
Stanzione & Kim, LLP
919 18th Street, NW
Suite 440
Washington, DC 20006

EXAMINER
TANG, SON M

ART UNIT	PAPER NUMBER
2612	

MAIL DATE	DELIVERY MODE
12/13/2011	PAPER

Please find below and/or attached an Office communication concerning this application or proceeding.

The time period for reply, if any, is set in the attached communication.

Office Action Summary	Application No.	Applicant(s)	
	12/565,909	YOON ET AL.	
	Examiner	Art Unit	
	SON M. TANG	2612	

-- The MAILING DATE of this communication appears on the cover sheet with the correspondence address --

Period for Reply

A SHORTENED STATUTORY PERIOD FOR REPLY IS SET TO EXPIRE 3 MONTH(S) OR THIRTY (30) DAYS, WHICHEVER IS LONGER, FROM THE MAILING DATE OF THIS COMMUNICATION.

- Extensions of time may be available under the provisions of 37 CFR 1.136(a). In no event, however, may a reply be timely filed after SIX (6) MONTHS from the mailing date of this communication.
- If NO period for reply is specified above, the maximum statutory period will apply and will expire SIX (6) MONTHS from the mailing date of this communication.
- Failure to reply within the set or extended period for reply will, by statute, cause the application to become ABANDONED (35 U.S.C. § 133). Any reply received by the Office later than three months after the mailing date of this communication, even if timely filed, may reduce any earned patent term adjustment. See 37 CFR 1.704(b).

Status

1)☒ Responsive to communication(s) filed on *24 September 2009*.

2a)☐ This action is **FINAL**. 2b)☒ This action is non-final.

3)☐ An election was made by the applicant in response to a restriction requirement set forth during the interview on _____; the restriction requirement and election have been incorporated into this action.

4)☐ Since this application is in condition for allowance except for formal matters, prosecution as to the merits is closed in accordance with the practice under *Ex parte Quayle*, 1935 C.D. 11, 453 O.G. 213.

Disposition of Claims

5)☒ Claim(s) *1-34* is/are pending in the application.

5a) Of the above claim(s) _____ is/are withdrawn from consideration.

6)☐ Claim(s) _____ is/are allowed.

7)☒ Claim(s) *1-34* is/are rejected.

8)☐ Claim(s) _____ is/are objected to.

9)☐ Claim(s) _____ are subject to restriction and/or election requirement.

Application Papers

10)☐ The specification is objected to by the Examiner.

11)☐ The drawing(s) filed on _____ is/are: a)☐ accepted or b)☐ objected to by the Examiner.

Applicant may not request that any objection to the drawing(s) be held in abeyance. See 37 CFR 1.85(a).

Replacement drawing sheet(s) including the correction is required if the drawing(s) is objected to. See 37 CFR 1.121(d).

12)☐ The oath or declaration is objected to by the Examiner. Note the attached Office Action or form PTO-152.

Priority under 35 U.S.C. § 119

13)☒ Acknowledgment is made of a claim for foreign priority under 35 U.S.C. § 119(a)-(d) or (f).

a)☐ All b)☐ Some * c)☒ None of:

1.☒ Certified copies of the priority documents have been received.

2.☐ Certified copies of the priority documents have been received in Application No. _____.

3.☐ Copies of the certified copies of the priority documents have been received in this National Stage application from the International Bureau (PCT Rule 17.2(a)).

* See the attached detailed Office action for a list of the certified copies not received.

Attachment(s)

1) ☒ Notice of References Cited (PTO-892)

2) ☐ Notice of Draftsperson's Patent Drawing Review (PTO-948)

3) ☒ Information Disclosure Statement(s) (PTO/SB/08) Paper No(s)/Mail Date *4/26/2010, 9/24/2009*.

4) ☐ Interview Summary (PTO-413) Paper No(s)/Mail Date. _____ .

5) ☐ Notice of Informal Patent Application

6) ☐ Other: _____.

DETAILED ACTION

Claim Rejections - 35 USC § 102

1. The following is a quotation of the appropriate paragraphs of 35 U.S.C. 102 that form the basis for the rejections under this section made in this Office action:

> A person shall be entitled to a patent unless –
>
> (b) the invention was patented or described in a printed publication in this or a foreign country or in public use or on sale in this country, more than one year prior to the date of application for patent in the United States.

2. Claims **1-3, 8-11,13-16,19-23,25-31 and 33-34** are rejected under 35 U.S.C. 102(b) as being anticipated by **Yang et al**. [US 6,690,431; Yang].

Regarding to claims 1, 8, 10, 13-14, 19-20, 25-28, 31, 33-34: Yang discloses a method of controlling a device, and the device is an audio/video (AV) amplifier system comprising, an external device (e.g. CD, VCD, LD, DVD, VTR) inherently includes a signal transmitter to output a signal upon receipt of power signal from user, the external device (e.g. CD) connected to the AV amplifier system [Fig. 2] having an audio receiver (701, 702, 703 and 102) to receive the signal and a microcomputer (CPU 3) to control power supply and audio output according to whether the signal is received [see Figs. 2-6, col. 5, lines 15-67 and col. 6, lines 1-25].

Regarding to claims 2-3, 9, 15-16 and 30: Yang further discloses that the receiver (102) received digital signal through optic fiber [cited at col. 5, lines 40-43 and 50-52], that constitutes of claimed that the signal is an optical signal including a clock signal and audio signal, because digital audio signal is being transmitted in a form of pulses that the clock signal is included to carry data, such as audio.

Regarding to claims 11, 21 and 29: Yang discloses the AV system which used to enhance the power of the electro-volume of the speaker system [col. 1, lines 12-19], although,

Yang does not show the speaker system, it is inherently included in the AV system of Yang, because the AV system is intended to enhance the power for the audio speaker.

Regarding to claim 23: Yang discloses a plurality of electronic devices (e.g. CD, VCD, LD, DVD and VTR) connected to an electronic switch device (101) of the AV system [Fig. 2], the connection normally connect through the coupling or port of the devices. With that, the connection port of the receiver device is inherently included with the AV system, in order for the CD device to connect to the AV system.

Claim Rejections - 35 USC § 103

3. The following is a quotation of 35 U.S.C. 103(a) which forms the basis for all obviousness rejections set forth in this Office action:

> (a) A patent may not be obtained though the invention is not identically disclosed or described as set forth in section 102 of this title, if the differences between the subject matter sought to be patented and the prior art are such that the subject matter as a whole would have been obvious at the time the invention was made to a person having ordinary skill in the art to which said subject matter pertains. Patentability shall not be negatived by the manner in which the invention was made.

4. Claims **4-7, 12 and 17-18** are rejected under 35 U.S.C. 103 (a) as being unpatentable over Yang in views of Bergman et al. [US 2009/022,552,8; Bergman].

Regarding to claims 4-7, 12 and 17-18: Yang discloses all the limitations described above, including an AV processing circuit (201) for processing received signal, except for not specifically show a filter to cancel noise from the received signal, a rectifier to rectify the noise-cancelled signal and a switch to turn on upon receipt of the rectified signal.

Bergman teaches an audio device with integrated switching power supply comprises, a filter (204) for filtering noise, rectifier (206) for rectifying signal and a power switch (200) connected to the rectifier [see Figs. 2-3 and paragraphs 0025-0027], although, the receiving

signal is not audio signal from the external device (e.g. CD, DVD), the reference shows a known concept of filtering noise from the any appropriate receiving signal from any appropriate sources.

Therefore, it is obvious to one having ordinary skill in the art at the time the invention was made, to implement a noise filter, rectifier and power switch as taught by Bergman with the AV processing circuit of Yang, the implement would yield a predictable results, the resulted would improve the system, because most receiving signal from other device is not noise free, which needs to filter for more accuracy.

5. Claims **24 and 32** are rejected under 35 U.S.C. 103 (a) as being unpatentable over **Yang** in views of **Holmgren et al**. [US 8,024,055; Holmgren].

Regarding to claims 24 and 32: Yang discloses all the limitations as described above, except for not specifically mention that the connection between the receiver and external source through a wireless connection.

Holmgren teaches a system for controlling amplifier comprising a plurality of electronic devices (e.g. 102, 104, 106, 110 and 112) is connected through wireless connection [see Fig. 1-2A, col. 4, lines 1-53 and col. 5, lines 32-45].

One having ordinary skill artisan would found it obvious to apply an alternative technology such as wireless connection as suggested by Holmgren, with the system of Yang, for the benefit of at least convenience to use and less labor for installation.

Conclusion

6. The prior art made of record and not relied upon is considered pertinent to applicant's disclosure.

Miyajima [US 5,539,477]

Any inquiry concerning this communication or earlier communications from the examiner should be directed to SON M. TANG whose telephone number is (571)272-2962. The examiner can normally be reached on 5/8.

If attempts to reach the examiner by telephone are unsuccessful, the examiner's supervisor, Daniel Wu can be reached on (571)272-2964. The fax phone number for the organization where this application or proceeding is assigned is 571-273-8300.

Information regarding the status of an application may be obtained from the Patent Application Information Retrieval (PAIR) system. Status information for published applications may be obtained from either Private PAIR or Public PAIR. Status information for unpublished applications is available through Private PAIR only. For more information about the PAIR system, see http://pair-direct.uspto.gov. Should you have questions on access to the Private PAIR system, contact the Electronic Business Center (EBC) at 866-217-9197 (toll-free). If you would like assistance from a USPTO Customer Service Representative or access to the automated information system, call 800-786-9199 (IN USA OR CANADA) or 571-272-1000.

/S. M. T./
Examiner, Art Unit 2612

/DANIEL WU/
Supervisory Patent Examiner, Art Unit 2612

Notice of References Cited	Application/Control No. 12/565,909	Applicant(s)/Patent Under Reexamination YOON ET AL.	
	Examiner SON M. TANG	Art Unit 2612	Page 1 of 1

U.S. PATENT DOCUMENTS

*		Document Number Country Code-Number-Kind Code	Date MM-YYYY	Name	Classification
*	A	US-5,414,475 A	05-1995	Trzyna et al.	348/730
*	B	US-5,539,477 A	07-1996	Miyajima, Akio	348/730
*	C	US-5,722,050 A	02-1998	Chen, Jinsaun	455/66.1
*	D	US-5,768,399 A	06-1998	Statham et al.	381/120
*	E	US-6,590,982 B1	07-2003	Chen, Jinsaun	381/2
*	F	US-6,690,431 B1	02-2004	Yang et al.	348/706
*	G	US-2005/0233695 A1	10-2005	Cho, Cheon Kwon	455/013.4
*	H	US-2009/0225528 A1	09-2009	Bergman et al.	361/814
*	I	US-7,684,885 B2	03-2010	Woolfork, C. Earl	700/94
*	J	US-8,024,055 B1	09-2011	Holmgren et al.	700/94
	K	US-			
	L	US-			
	M	US-			

FOREIGN PATENT DOCUMENTS

*		Document Number Country Code-Number-Kind Code	Date MM-YYYY	Country	Name	Classification
	N					
	O					
	P					
	Q					
	R					
	S					
	T					

NON-PATENT DOCUMENTS

*		Include as applicable: Author, Title Date, Publisher, Edition or Volume, Pertinent Pages)
	U	
	V	
	W	
	X	

*A copy of this reference is not being furnished with this Office action. (See MPEP § 707.05(a).)
Dates in MM-YYYY format are publication dates. Classifications may be US or foreign.

Search Notes	Application/Control No.	Applicant(s)/Patent Under Reexamination
	12565909	YOON ET AL.
	Examiner	**Art Unit**
	SON M TANG	2612

SEARCHED

Class	Subclass	Date	Examiner
340	5.1,516,635,653-654	12/5/2011	ST
381	71.1,14,26-28,143,372	12/5/2011	ST

SEARCH NOTES

Search Notes	Date	Examiner

INTERFERENCE SEARCH

Class	Subclass	Date	Examiner

PTO/SB/08a (08-03)
Approved for use through 07/31/2006. OMB 0651-0031
U.S. Patent and Trademark Office; U.S. DEPARTMENT OF COMMERCE
Under the Paperwork Reduction Act of 1995, no persons are required to respond to a collection of information unless it contains a valid OMB control number.

INFORMATION DISCLOSURE STATEMENT BY APPLICANT

(Not for submission under 37 CFR 1.99)

Application Number	12/565,909
Filing Date	2009-09-24
First Named Inventor	Jong Taek YOON et al.
Art Unit	2612
Examiner Name	Son Tang
Attorney Docket Number	103-1339

U.S.PATENTS Remove

Examiner Initial*	Cite No	Patent Number	Kind Code[1]	Issue Date	Name of Patentee or Applicant of cited Document	Pages,Columns,Lines where Relevant Passages or Relevant Figures Appear
	1					

If you wish to add additional U.S. Patent citation information please click the Add button. Add

U.S.PATENT APPLICATION PUBLICATIONS Remove

Examiner Initial*	Cite No	Publication Number	Kind Code[1]	Publication Date	Name of Patentee or Applicant of cited Document	Pages,Columns,Lines where Relevant Passages or Relevant Figures Appear
	1					

If you wish to add additional U.S. Published Application citation information please click the Add button. Add

FOREIGN PATENT DOCUMENTS Remove

Examiner Initial*	Cite No	Foreign Document Number[3]	Country Code[2] ¡	Kind Code[4]	Publication Date	Name of Patentee or Applicant of cited Document	Pages,Columns,Lines where Relevant Passages or Relevant Figures Appear	T[5]
	1	2005-96713	KR		2005-10-06	LG Electronics Inc	abstract	☒

If you wish to add additional Foreign Patent Document citation information please click the Add button Add

NON-PATENT LITERATURE DOCUMENTS Remove

Examiner Initials*	Cite No	Include name of the author (in CAPITAL LETTERS), title of the article (when appropriate), title of the item (book, magazine, journal, serial, symposium, catalog, etc), date, pages(s), volume-issue number(s), publisher, city and/or country where published.	T[5]

ALL REFERENCES CONSIDERED EXCEPT WHERE LINED THROUGH. /S.T./

INFORMATION DISCLOSURE STATEMENT BY APPLICANT (Not for submission under 37 CFR 1.99)	Application Number	12/565,909
	Filing Date	2009-09-24
	First Named Inventor	Jong Taek YOON et al.
	Art Unit	2612
	Examiner Name	Son Tang
	Attorney Docket Number	103-1339

	1		☐

If you wish to add additional non-patent literature document citation information please click the Add button Add

EXAMINER SIGNATURE

Examiner Signature		Date Considered	

*EXAMINER: Initial if reference considered, whether or not citation is in conformance with MPEP 609. Draw line through a citation if not in conformance and not considered. Include copy of this form with next communication to applicant.

[1] See Kind Codes of USPTO Patent Documents at www.USPTO.GOV or MPEP 901.04. [2] Enter office that issued the document, by the two-letter code (WIPO Standard ST.3). [3] For Japanese patent documents, the indication of the year of the reign of the Emperor must precede the serial number of the patent document. [4] Kind of document by the appropriate symbols as indicated on the document under WIPO Standard ST.16 if possible. [5] Applicant is to place a check mark here if English language translation is attached.

ALL REFERENCES CONSIDERED EXCEPT WHERE LINED THROUGH. /S.T./

EAST Search History

EAST Search History (Prior Art)

Ref #	Hits	Search Query	DBs	Default Operator	Plurals	Time Stamp
L1	0	"3405".1,516,635,653-654.ccls.	US-PGPUB; USPAT; USOCR; FPRS; EPO; JPO; DERWENT; IBM_TDB	OR	OFF	2011/12/05 02:01
L2	3591	340/5.1,516,635,653-654.ccls.	US-PGPUB; USPAT; USOCR; FPRS; EPO; JPO; DERWENT; IBM_TDB	OR	OFF	2011/12/05 02:01
L3	136842	(receiv$3 near5 audio) or (audio/visual near3 amplifier) same (output near5 audio) same (processor computer microcomputer) same (power supply volume)	US-PGPUB; USPAT; USOCR; FPRS; EPO; JPO; DERWENT; IBM_TDB	OR	OFF	2011/12/05 02:03
L4	87	2 and 3	US-PGPUB; USPAT; USOCR; FPRS; EPO; JPO; DERWENT; IBM_TDB	OR	OFF	2011/12/05 02:03
L5	3	4 and (power near6 on/off)	US-PGPUB; USPAT; USOCR; FPRS; EPO; JPO; DERWENT; IBM_TDB	OR	OFF	2011/12/05 02:03
S1	1600	(audio near2 (device system)) same (external transmitter) near5 (receiv$3 coupl$3 connect$3) same (output near3 audio)	US-PGPUB; USPAT; USOCR; FPRS; EPO; JPO; DERWENT; IBM_TDB	OR	OFF	2011/12/03 01:43
S2	7002	(receiv$3 near5 audio) same (output near5 audio) same (processor computer microcomputer)	US-PGPUB; USPAT; USOCR; FPRS; EPO; JPO; DERWENT; IBM_TDB	OR	OFF	2011/12/03 01:45
S3	333	S1 and S2	US-PGPUB;	OR	OFF	2011/12/03

			USPAT; USOCR; FPRS; EPO; JPO; DERWENT; IBM_TDB			01:45
S4	4	S3 and (audio near3 output) with (according depending) near6 (audio near3 (input receiv$3))	US-PGPUB; USPAT; USOCR; FPRS; EPO; JPO; DERWENT; IBM_TDB	OR	OFF	2011/12/03 01:46
S5	0	((audio sound) near2 (input receiv$3)) same (external near3 (device appratus unit transmitter)) same (output near3 (sound audio)) with (according corresponding) near5 (input receiv$3)	US-PGPUB; USPAT; USOCR; FPRS; EPO; JPO; DERWENT; IBM_TDB	OR	OFF	2011/12/03 02:08
S6	721	(audio with (connect$3 coupl$3)) near6 (audio near3 receiver) same (output near3 audio)	US-PGPUB; USPAT; USOCR; FPRS; EPO; JPO; DERWENT; IBM_TDB	OR	OFF	2011/12/03 02:09
S7	1519	381/71.1,14,26-28,143,372.ccls.	US-PGPUB; USPAT; USOCR; FPRS; EPO; JPO; DERWENT; IBM_TDB	OR	OFF	2011/12/03 02:10
S8	5	S6 and S7	US-PGPUB; USPAT; USOCR; FPRS; EPO; JPO; DERWENT; IBM_TDB	OR	OFF	2011/12/03 02:10
S9	17	("4683590" | "4860364" | "4998241" | "5033082" | "5216722" | "5323458" | "5323459" | "5371789" | "5396554").PN. OR ("5664019").URPN.	US-PGPUB; USPAT; USOCR	OR	OFF	2011/12/03 11:15
S10	73	("2236946" | "2828413" | "2840694" | "3080785" | "3085460" | "3087117" | "3296916" | "3579211" | "3743751" | "3781451" | "3825666" | "3863157" | "3901118" | "3906160" | "4004228" | "4229826" | "4335930" | "4344184" | "4369521" | "4430757" | "4453269" | "4464792" | "4471493" | "4612688" | "4647135" | "4721926" | "4794622" | "4845751" | "4899388" | "4988957" | "5025704" | "5214568").PN. OR ("5771441").URPN.	US-PGPUB; USPAT; USOCR	OR	OFF	2011/12/03 11:20
S11	60	(audio near2 signal near3 transmit$3) same (audio near2 signal near3 receiv$3) same (control$3 near4 power)	US-PGPUB; USPAT; USOCR	OR	OFF	2011/12/03 11:48
S12	11	("4857917").PN. OR ("5539477").URPN.	US-PGPUB;	OR	OFF	2011/12/04

			USPAT; USOCR			16:49
S13	16	("4858006" | "5170159" | "5539477" | "5548346" | "5754254" | "5754256" | "5838393" | "5917557" | "6118496" | "6122018" | "6167140" | "6340968").PN. OR ("6690431").URPN.	US-PGPUB; USPAT; USOCR	OR	OFF	2011/12/04 16:54

12/5/2011 2:04:31 AM
C:\Users\stang\Documents\EAST\Workspaces\12565909.wsp

Index of Claims	Application/Control No.	Applicant(s)/Patent Under Reexamination
	12565909	YOON ET AL.
	Examiner	**Art Unit**
	SON M TANG	2612

✓	Rejected	-	Cancelled	N	Non-Elected	A	Appeal
=	Allowed	÷	Restricted	I	Interference	O	Objected

☐ Claims renumbered in the same order as presented by applicant ☐ CPA ☐ T.D. ☐ R.1.47

CLAIM		DATE								
Final	Original	12/05/2011								
	1	✓								
	2	✓								
	3	✓								
	4	✓								
	5	✓								
	6	✓								
	7	✓								
	8	✓								
	9	✓								
	10	✓								
	11	✓								
	12	✓								
	13	✓								
	14	✓								
	15	✓								
	16	✓								
	17	✓								
	18	✓								
	19	✓								
	20	✓								
	21	✓								
	22	✓								
	23	✓								
	24	✓								
	25	✓								
	26	✓								
	27	✓								
	28	✓								
	29	✓								
	30	✓								
	31	✓								
	32	✓								
	33	✓								
	34	✓								

PTO/SB/08a (01-10)
Approved for use through 07/31/2012. OMB 0651-0031
U.S. Patent and Trademark Office; U.S. DEPARTMENT OF COMMERCE
Under the Paperwork Reduction Act of 1995, no persons are required to respond to a collection of information unless it contains a valid OMB control number.

INFORMATION DISCLOSURE STATEMENT BY APPLICANT

(Not for submission under 37 CFR 1.99)

Application Number	12565909
Filing Date	2009-09-24
First Named Inventor	Jong Taek YOON
Art Unit	2612
Examiner Name	Son Tang
Attorney Docket Number	103-1339

U.S.PATENTS Remove

Examiner Initial*	Cite No	Patent Number	Kind Code[1]	Issue Date	Name of Patentee or Applicant of cited Document	Pages,Columns,Lines where Relevant Passages or Relevant Figures Appear
	1	4621374		1986-11-04	Ljubo MICIC et al.	
	2	5406634		1995-04-11	Charles W. ANDERSON et al.	

If you wish to add additional U.S. Patent citation information please click the Add button. Add

U.S.PATENT APPLICATION PUBLICATIONS Remove

Examiner Initial*	Cite No	Publication Number	Kind Code[1]	Publication Date	Name of Patentee or Applicant of cited Document	Pages,Columns,Lines where Relevant Passages or Relevant Figures Appear
	1	20050018857		2005-01-27	William A. McCARTY et al.	

If you wish to add additional U.S. Published Application citation information please click the Add button. Add

FOREIGN PATENT DOCUMENTS Remove

Examiner Initial*	Cite No	Foreign Document Number[3]	Country Code[2] ¡	Kind Code[4]	Publication Date	Name of Patentee or Applicant of cited Document	Pages,Columns,Lines where Relevant Passages or Relevant Figures Appear	T[5]
	1	2123193	GB		1984-01-25	James Ernest GLEAVE	Abstract	☒

If you wish to add additional Foreign Patent Document citation information please click the Add button Add

NON-PATENT LITERATURE DOCUMENTS Remove

ALL REFERENCES CONSIDERED EXCEPT WHERE LINED THROUGH. /S.T./

INFORMATION DISCLOSURE STATEMENT BY APPLICANT (Not for submission under 37 CFR 1.99)		
	Application Number	12565909
	Filing Date	2009-09-24
	First Named Inventor	Jong Taek YOON
	Art Unit	2612
	Examiner Name	Son Tang
	Attorney Docket Number	103-1339

Examiner Initials*	Cite No	Include name of the author (in CAPITAL LETTERS), title of the article (when appropriate), title of the item (book, magazine, journal, serial, symposium, catalog, etc), date, pages(s), volume-issue number(s), publisher, city and/or country where published.	T[5]
	1	European Search Report issued March 26, 2010 in EP Application No. 09173670.2	☒
	2	Rod Elliott: "Signal Detecting Auto Power-On Unit" internet citation 5 December 1999 (1999-12-05), XP002572036 Retrieved from the Internet: URL:http://sound.westhost.com/project38.htm>	☒

If you wish to add additional non-patent literature document citation information please click the Add button Add

EXAMINER SIGNATURE

Examiner Signature	/Son Tang/ (12/05/2011)	Date Considered	

*EXAMINER: Initial if reference considered, whether or not citation is in conformance with MPEP 609. Draw line through a citation if not in conformance and not considered. Include copy of this form with next communication to applicant.

[1] See Kind Codes of USPTO Patent Documents at www.USPTO.GOV or MPEP 901.04. [2] Enter office that issued the document, by the two-letter code (WIPO Standard ST.3). [3] For Japanese patent documents, the indication of the year of the reign of the Emperor must precede the serial number of the patent document. [4] Kind of document by the appropriate symbols as indicated on the document under WIPO Standard ST.16 if possible. [5] Applicant is to place a check mark here if English language translation is attached.

ALL REFERENCES CONSIDERED EXCEPT WHERE LINED THROUGH. /S.T./

UNITED STATES PATENT AND TRADEMARK OFFICE

UNITED STATES DEPARTMENT OF COMMERCE
United States Patent and Trademark Office
Address: COMMISSIONER FOR PATENTS
P.O. Box 1450
Alexandria, Virginia 22313-1450
www.uspto.gov

APPLICATION NUMBER	FILING OR 371(C) DATE	FIRST NAMED APPLICANT	ATTY. DOCKET NO./TITLE
12/565,909	09/24/2009	Jong Taek YOON	103-1339

CONFIRMATION NO. 1417

PUBLICATION NOTICE

38209
STANZIONE & KIM, LLP
919 18TH STREET, N.W.
SUITE 440
WASHINGTON, DC 20006

OC000000042469936

Title:AUDIO DEVICE, AV SYSTEM HAVING THE AUDIO DEVICE, AND METHOD TO CONTROL THE AUDIO DEVICE

Publication No.US-2010-0171587-A1
Publication Date:07/08/2010

NOTICE OF PUBLICATION OF APPLICATION

The above-identified application will be electronically published as a patent application publication pursuant to 37 CFR 1.211, et seq. The patent application publication number and publication date are set forth above.

The publication may be accessed through the USPTO's publically available Searchable Databases via the Internet at www.uspto.gov. The direct link to access the publication is currently http://www.uspto.gov/patft/.

The publication process established by the Office does not provide for mailing a copy of the publication to applicant. A copy of the publication may be obtained from the Office upon payment of the appropriate fee set forth in 37 CFR 1.19(a)(1). Orders for copies of patent application publications are handled by the USPTO's Office of Public Records. The Office of Public Records can be reached by telephone at (703) 308-9726 or (800) 972-6382, by facsimile at (703) 305-8759, by mail addressed to the United States Patent and Trademark Office, Office of Public Records, Alexandria, VA 22313-1450 or via the Internet.

In addition, information on the status of the application, including the mailing date of Office actions and the dates of receipt of correspondence filed in the Office, may also be accessed via the Internet through the Patent Electronic Business Center at www.uspto.gov using the public side of the Patent Application Information and Retrieval (PAIR) system. The direct link to access this status information is currently http://pair.uspto.gov/. Prior to publication, such status information is confidential and may only be obtained by applicant using the private side of PAIR.

Further assistance in electronically accessing the publication, or about PAIR, is available by calling the Patent Electronic Business Center at 1-866-217-9197.

Office of Data Managment, Application Assistance Unit (571) 272-4000, or (571) 272-4200, or 1-888-786-0101

PTO/SB/08a (01-10)
Approved for use through 07/31/2012. OMB 0651-0031
U.S. Patent and Trademark Office; U.S. DEPARTMENT OF COMMERCE
Under the Paperwork Reduction Act of 1995, no persons are required to respond to a collection of information unless it contains a valid OMB control number.

INFORMATION DISCLOSURE STATEMENT BY APPLICANT

(Not for submission under 37 CFR 1.99)

Application Number	12565909
Filing Date	2009-09-24
First Named Inventor	Jong Taek YOON
Art Unit	
Examiner Name	
Attorney Docket Number	103-1339

U.S.PATENTS Remove

Examiner Initial*	Cite No	Patent Number	Kind Code[1]	Issue Date	Name of Patentee or Applicant of cited Document	Pages,Columns,Lines where Relevant Passages or Relevant Figures Appear
	1	4621374		1986-11-04	Ljubo MICIC et al.	
	2	5406634		1995-04-11	Charles W. ANDERSON et al.	

If you wish to add additional U.S. Patent citation information please click the Add button. Add

U.S.PATENT APPLICATION PUBLICATIONS Remove

Examiner Initial*	Cite No	Publication Number	Kind Code[1]	Publication Date	Name of Patentee or Applicant of cited Document	Pages,Columns,Lines where Relevant Passages or Relevant Figures Appear
	1	20050018857		2005-01-27	William A. McCARTY et al.	

If you wish to add additional U.S. Published Application citation information please click the Add button. Add

FOREIGN PATENT DOCUMENTS Remove

Examiner Initial*	Cite No	Foreign Document Number[3]	Country Code[2] ¡	Kind Code[4]	Publication Date	Name of Patentee or Applicant of cited Document	Pages,Columns,Lines where Relevant Passages or Relevant Figures Appear	T[5]
	1	2123193	GB		1984-01-25	James Ernest GLEAVE	Abstract	☒

If you wish to add additional Foreign Patent Document citation information please click the Add button Add

NON-PATENT LITERATURE DOCUMENTS Remove

INFORMATION DISCLOSURE STATEMENT BY APPLICANT (Not for submission under 37 CFR 1.99)		
	Application Number	12565909
	Filing Date	2009-09-24
	First Named Inventor	Jong Taek YOON
	Art Unit	
	Examiner Name	
	Attorney Docket Number	103-1339

Examiner Initials*	Cite No	Include name of the author (in CAPITAL LETTERS), title of the article (when appropriate), title of the item (book, magazine, journal, serial, symposium, catalog, etc), date, pages(s), volume-issue number(s), publisher, city and/or country where published.	T[5]
	1	European Search Report issued March 26, 2010 in EP Application No. 09173670.2	☒
	2	Rod Elliott: "Signal Detecting Auto Power-On Unit" internet citation 5 December 1999 (1999-12-05), XP002572036 Retrieved from the Internet: URL:http://sound.westhost.com/project38.htm>	☒

If you wish to add additional non-patent literature document citation information please click the Add button Add

EXAMINER SIGNATURE

Examiner Signature		Date Considered	

*EXAMINER: Initial if reference considered, whether or not citation is in conformance with MPEP 609. Draw line through a citation if not in conformance and not considered. Include copy of this form with next communication to applicant.

[1] See Kind Codes of USPTO Patent Documents at www.USPTO.GOV or MPEP 901.04. [2] Enter office that issued the document, by the two-letter code (WIPO Standard ST.3). [3] For Japanese patent documents, the indication of the year of the reign of the Emperor must precede the serial number of the patent document. [4] Kind of document by the appropriate symbols as indicated on the document under WIPO Standard ST.16 if possible. [5] Applicant is to place a check mark here if English language translation is attached.

INFORMATION DISCLOSURE STATEMENT BY APPLICANT (Not for submission under 37 CFR 1.99)	Application Number	12565909
	Filing Date	2009-09-24
	First Named Inventor	Jong Taek YOON
	Art Unit	
	Examiner Name	
	Attorney Docket Number	103-1339

CERTIFICATION STATEMENT

Please see 37 CFR 1.97 and 1.98 to make the appropriate selection(s):

☐ That each item of information contained in the information disclosure statement was first cited in any communication from a foreign patent office in a counterpart foreign application not more than three months prior to the filing of the information disclosure statement. See 37 CFR 1.97(e)(1).

OR

☐ That no item of information contained in the information disclosure statement was cited in a communication from a foreign patent office in a counterpart foreign application, and, to the knowledge of the person signing the certification after making reasonable inquiry, no item of information contained in the information disclosure statement was known to any individual designated in 37 CFR 1.56(c) more than three months prior to the filing of the information disclosure statement. See 37 CFR 1.97(e)(2).

☐ See attached certification statement.

☐ Fee set forth in 37 CFR 1.17 (p) has been submitted herewith.

☒ None

SIGNATURE

A signature of the applicant or representative is required in accordance with CFR 1.33, 10.18. Please see CFR 1.4(d) for the form of the signature.

Signature	/Patrick J. Stanzione/	Date (YYYY-MM-DD)	2010-04-26
Name/Print	Patrick J. Stanzione	Registration Number	40,434

This collection of information is required by 37 CFR 1.97 and 1.98. The information is required to obtain or retain a benefit by the public which is to file (and by the USPTO to process) an application. Confidentiality is governed by 35 U.S.C. 122 and 37 CFR 1.14. This collection is estimated to take 1 hour to complete, including gathering, preparing and submitting the completed application form to the USPTO. Time will vary depending upon the individual case. Any comments on the amount of time you require to complete this form and/or suggestions for reducing this burden, should be sent to the Chief Information Officer, U.S. Patent and Trademark Office, U.S. Department of Commerce, P.O. Box 1450, Alexandria, VA 22313-1450. DO NOT SEND FEES OR COMPLETED FORMS TO THIS ADDRESS. **SEND TO: Commissioner for Patents, P.O. Box 1450, Alexandria, VA 22313-1450.**

Privacy Act Statement

The Privacy Act of 1974 (P.L. 93-579) requires that you be given certain information in connection with your submission of the attached form related to a patent application or patent. Accordingly, pursuant to the requirements of the Act, please be advised that: (1) the general authority for the collection of this information is 35 U.S.C. 2(b)(2); (2) furnishing of the information solicited is voluntary; and (3) the principal purpose for which the information is used by the U.S. Patent and Trademark Office is to process and/or examine your submission related to a patent application or patent. If you do not furnish the requested information, the U.S. Patent and Trademark Office may not be able to process and/or examine your submission, which may result in termination of proceedings or abandonment of the application or expiration of the patent.

The information provided by you in this form will be subject to the following routine uses:

1. The information on this form will be treated confidentially to the extent allowed under the Freedom of Information Act (5 U.S.C. 552) and the Privacy Act (5 U.S.C. 552a). Records from this system of records may be disclosed to the Department of Justice to determine whether the Freedom of Information Act requires disclosure of these record s.

2. A record from this system of records may be disclosed, as a routine use, in the course of presenting evidence to a court, magistrate, or administrative tribunal, including disclosures to opposing counsel in the course of settlement negotiations.

3. A record in this system of records may be disclosed, as a routine use, to a Member of Congress submitting a request involving an individual, to whom the record pertains, when the individual has requested assistance from the Member with respect to the subject matter of the record.

4. A record in this system of records may be disclosed, as a routine use, to a contractor of the Agency having need for the information in order to perform a contract. Recipients of information shall be required to comply with the requirements of the Privacy Act of 1974, as amended, pursuant to 5 U.S.C. 552a(m).

5. A record related to an International Application filed under the Patent Cooperation Treaty in this system of records may be disclosed, as a routine use, to the International Bureau of the World Intellectual Property Organization, pursuant to the Patent Cooperation Treaty.

6. A record in this system of records may be disclosed, as a routine use, to another federal agency for purposes of National Security review (35 U.S.C. 181) and for review pursuant to the Atomic Energy Act (42 U.S.C. 218(c)).

7. A record from this system of records may be disclosed, as a routine use, to the Administrator, General Services, or his/her designee, during an inspection of records conducted by GSA as part of that agency's responsibility to recommend improvements in records management practices and programs, under authority of 44 U.S.C. 2904 and 2906. Such disclosure shall be made in accordance with the GSA regulations governing inspection of records for this purpose, and any other relevant (i.e., GSA or Commerce) directive. Such disclosure shall not be used to make determinations about individuals.

8. A record from this system of records may be disclosed, as a routine use, to the public after either publication of the application pursuant to 35 U.S.C. 122(b) or issuance of a patent pursuant to 35 U.S.C. 151. Further, a record may be disclosed, subject to the limitations of 37 CFR 1.14, as a routine use, to the public if the record was filed in an application which became abandoned or in which the proceedings were terminated and which application is referenced by either a published application, an application open to public inspections or an issued patent.

9. A record from this system of records may be disclosed, as a routine use, to a Federal, State, or local law enforcement agency, if the USPTO becomes aware of a violation or potential violation of law or regulation.

(12) UK Patent Application (19) GB (11) 2 123 193 A

(21) Application No **8316762**
(22) Date of filing **20 Jun 1983**
(30) Priority data
(31) **8217819**
(32) **19 Jun 1982**
(33) **United Kingdom (GB)**
(43) Application published **25 Jan 1984**
(51) INT CL[3] **H04R 27/00 3/12**
(52) Domestic classification **G4H** 13D 13F 14A 14D 1A 60 NA NC3 **U1S** 1723 1834 1943 2207 G4H
(56) Documents cited
GB 1422130
GB 1417599
GB 1394022
GB 1361384
EP A2 0039203
(58) Field of search **G4H**

(71) Applicants
James Ernest Gleave,
1 Gold Lane,
Biddenham,
Bedford MK40 4AN.

(72) Inventors
James Ernest Gleave

(74) Agent and/or Address for Service
Reddie and Grose,
16 Theobalds Road,
London WC1X 8PL.

(54) Public address system

(57) A central station (10) is linked to a plurality of loudspeaker stations (11) by a common digital and audio highway (12). Each loudspeaker station has a unique address (22) and digital signals are addressed to the loudspeaker stations to turn the loudspeakers (13) on and off and establish the loudness levels by way of variable gain amplifiers (14). Each loudspeaker station (11) includes digital circuitry centered on a microprocessor (17) for responding to address and control words from the central station (10) and controlling the amplifier (14). To test whether a loudspeaker is speaking, an adjacent microphone (24) can return an answering signal to the digital highway by way of an amplifier (26) and analog input port (25). In a modified embodiment the answering signal is sent on the audio highway and the amplifier (14) is energised for test purposes by a tone generator controlled by the digital circuitry.

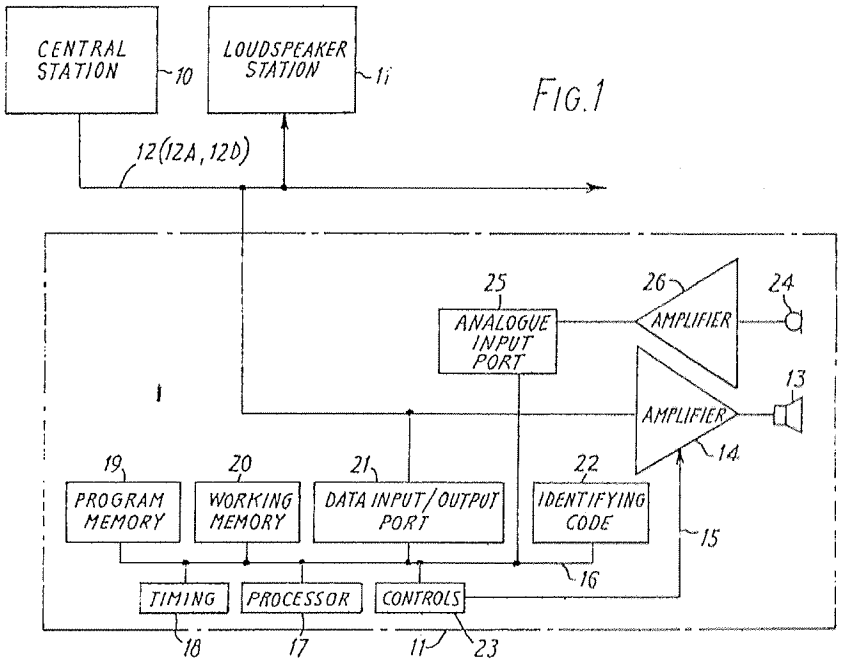

FIG. 1

GB 2 123 193 A

2123193

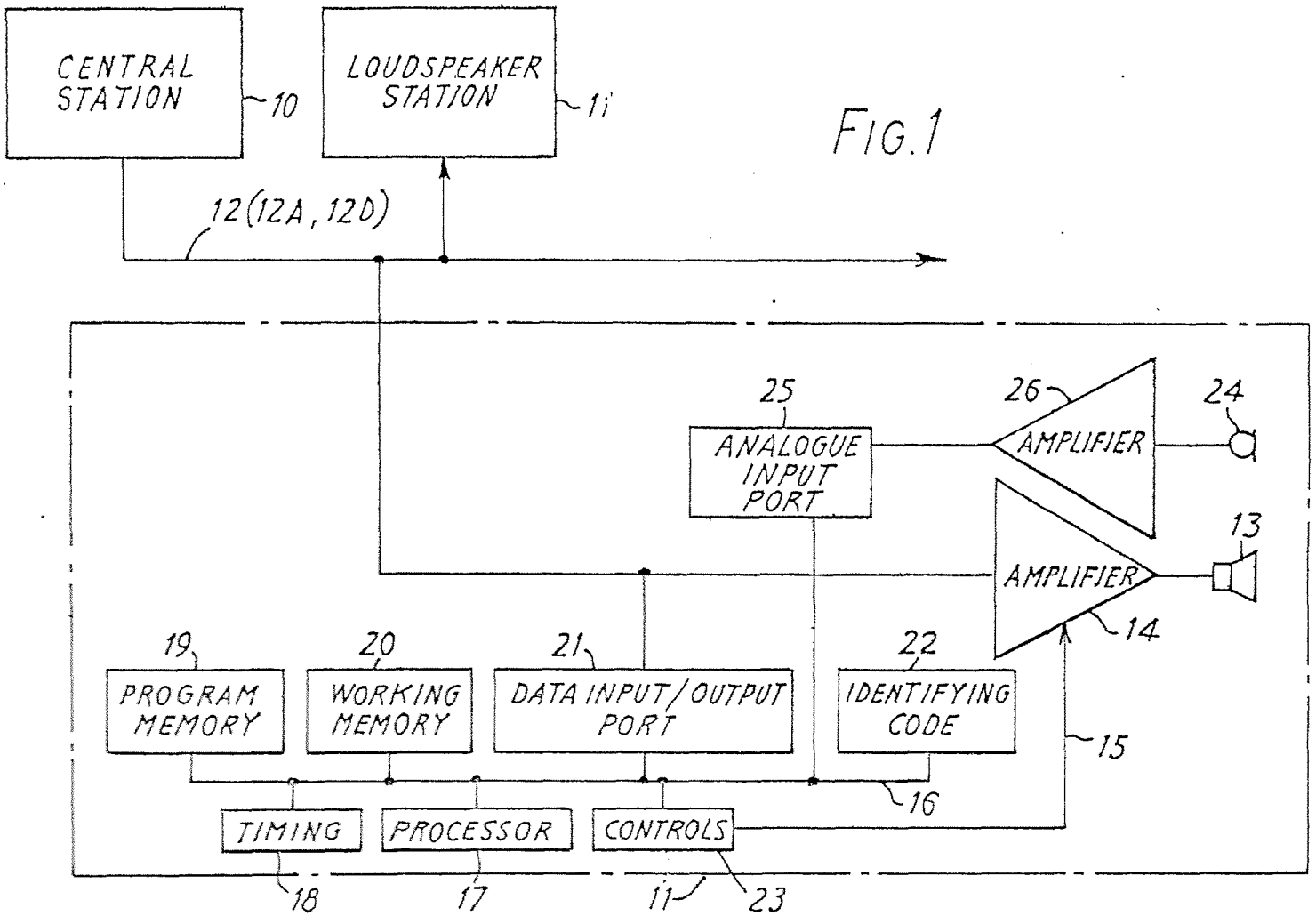

FIG. 1

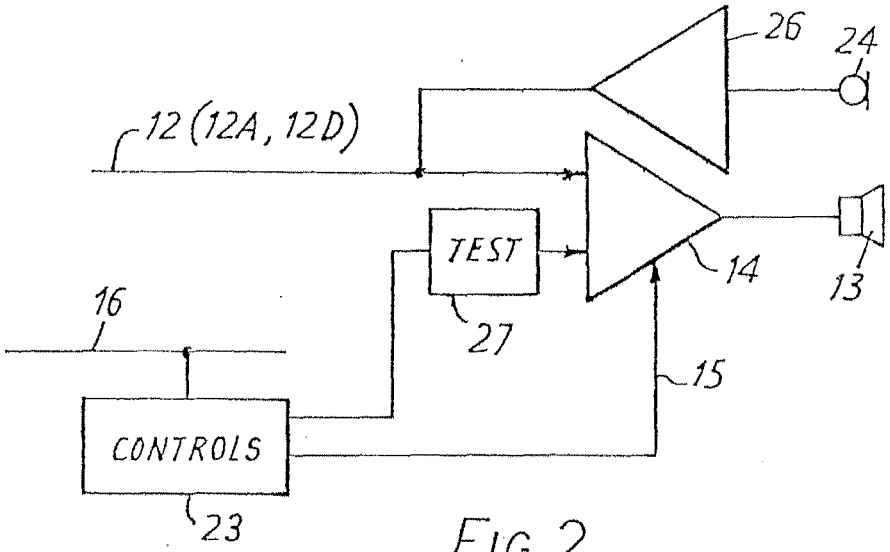
26
24
12 (12A, 12D)
TEST
14
13
16
27
15
CONTROLS
23

FIG. 2

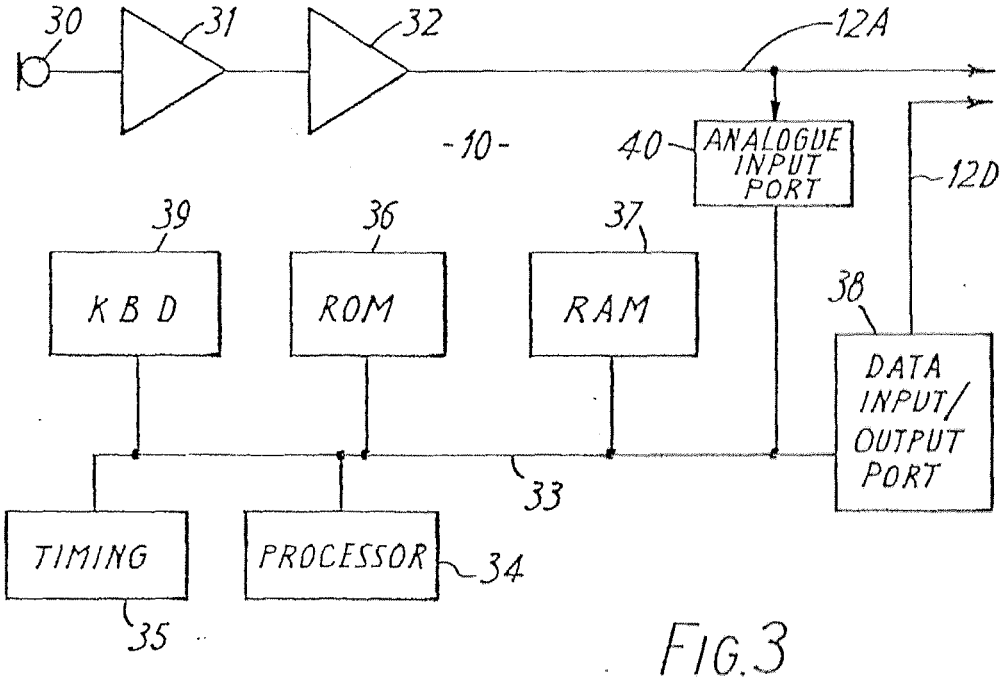
30
31
32
12A
-10-
40
ANALOGUE INPUT PORT
12D
39
36
37
38
KBD
ROM
RAM
DATA INPUT/ OUTPUT PORT
33
TIMING
PROCESSOR
34
35

FIG. 3

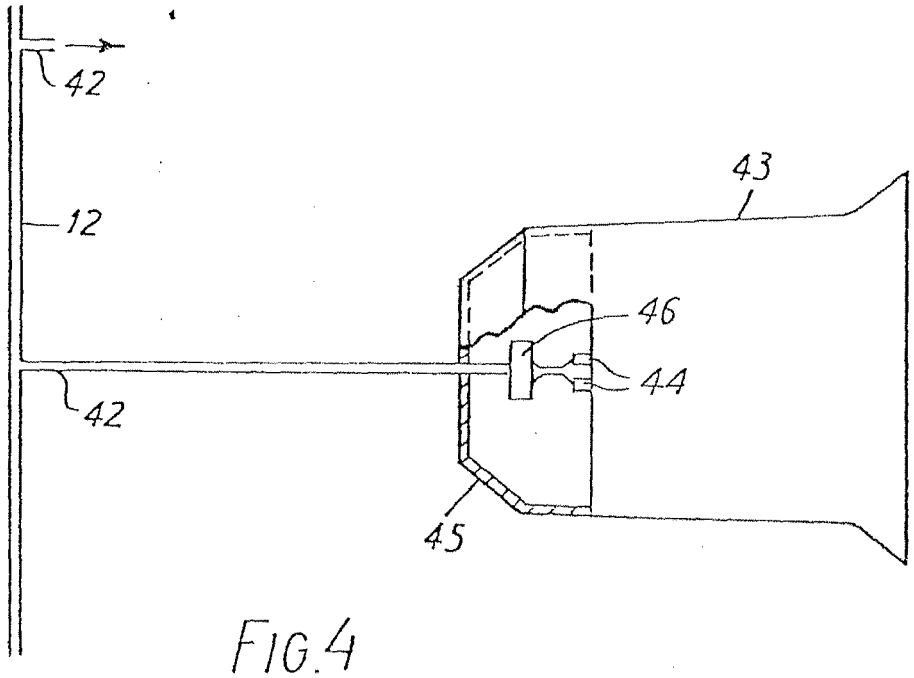

FIG.4

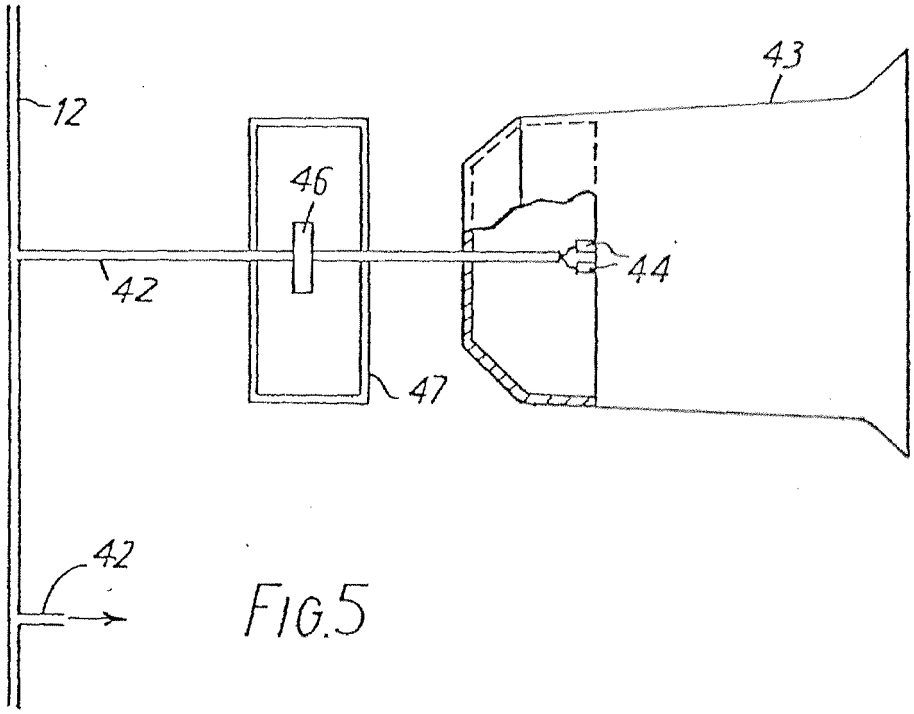

FIG.5

SPECIFICATION

Public address system

The present invention relates to a public address (PA) system comprising a central station connected by cable to a plurality of loudspeakers and having the ability to make announcements selectively from individual loudspeakers or groups of loudspeakers. Such PA systems are widely used in industrial premises and on board ship to name just two examples.

The practice has been to make up PA systems from power amplifiers and loudspeakers. The loudspeakers are electro-magnet or electro-static devices in which incoming messages, in the form of audio frequency signals from the power amplifiers, are applied to a diaphram which vibrates to announce the message. The power amplifiers are generally located in the central station position and connected by respective cables to the remotely positioned loudspeakers. Each central amplifier drives one or more loudspeakers, but all loudspeakers connected to one amplifier receive and announce the same message.

Such known systems obviously provide a degree of selectivity in that only the desired amplifiers may be enabled for a given message. Moreover the gains of the amplifiers can be adjusted individually to establish satisfactory loudness levels. However it is not possible to be selective within a group of loudspeakers served by the same amplifier and the adjustment of relative loudness levels of the loudspeakers within a group can only be effected by changing transformer tappings or adjusting pad resistors at the loudspeakers themselves. Moreover each amplifier has to have its own cabling for sending the audio signals to its group of loudspeakers.

The object of the present invention is to overcome these disadvantages of the prior art and, in particular, to provide a system which can be completely selective as to which loudspeakers give out any particular message.

According to the present invention, there is provided a public address system comprising a central station connected to a plurality of loudspeakers by a single cable highway capable of carrying both audio signals and digital signals, means at the central station for sending out digital signals identifying the loudspeakers individually, and control devices associated with the loudspeakers respectively and each including a switching device for switching the associated loudspeaker on or off and digital means responsive to digital signals addressed to the control device in question to operate the switching device.

The switching devices are preferably variable gain devices which can be operated under control of the digital means to establish the loudness level of the associated loudspeaker.

The cable highway preferably also distributes power to the control devices. In this case the most straightforward implementation uses a six-wire cable with one pair for power, one pair for audio and one pair for digital data. A four-wire cable may be used with power and data on one pair and audio on the other. It is even possible to put power, audio and data on a single pair. Regardless of the implementation the highway may be regarded as comprising a data highway and an audio highway. The configuration of the highway, whether star, ring or mixed is immaterial.

It is advantageous to provide a test facility whereby it is possible to determine from the central station whether each loudspeaker is actually speaking. To this end a microphone is mounted adjacent each loudspeaker and a signal is returned to the central station when the microphone is picking up a signal. Various possibilities exist in this respect, as follows:

(1) The microphone provides a signal to an analog port of the associated digital means and an answering digital signal indicating "message picked up" is generated for return to the central station. The test may then be effected by turning on only one loudspeaker and seeing whether the answering signal is received. Alternatively, the loudspeakers may be all turned on and the answering signals stored in the respective digital means which are then polled in turn to see which provide the answering digital signal.

(2) The microphones are all connected to the highway and each control device includes a test tone generator for energising its loudspeaker alone when commanded from the central station via the associated digital means. A single loudspeaker is accordingly energised and the central station checks to see if an answering audio signal appears on the highway.

(3) The features of (1) and (2) are combined so that the tests involve only digital signals passing from the central station and returning thereto from the control devices.

The invention will be described in more detail, by way of example, with reference to the accompanying drawings, in which:

Figure 1 is a block diagram of a system embodying the invention,

Figure 2 is a partial block diagram illustrating a modified embodiment,

Figure 3 is a block diagram of the central station of Figure 1, and

Figures 4 and *5* illustrate alternative realisations of a loudspeaker station.

Referring to Figure 1, the system comprises a central station 10 linked to a plurality of loudspeaker stations 11 by a highway 12 which comprises an audio highway 12a and a digital highway 12d in accordance with one of the various implementations thereof referred to above. For simplicity, Figure 1 shows only two loudspeaker stations 11 and the details of only one such station are illustrated. The loudspeaker stations are identical and their number is limited only by such practical considerations as the power of the amplifier at the central station 10 and the attenuation introduced by the audio highway 12a.

Turning to the construction of a loudspeaker station 11, the audio highway 12a is connected to a loudspeaker 13 through a variable gain amplifier 14 whose gain may be varied from zero up to a

predetermined maximum under control of a signal on a line 15. The amplifier 14 thus acts as a switching device which can be used to turn the loudspeaker 13 on and off, corresponding to appreciable amplifier gain and zero gain respectively.

The data highway 12d is connected to digital circuitry comprising a plurality of devices communicating by way of an internal bus 16. The devices on the bus comprise a microprocessor 17, a master timing circuit 18, a program memory (ROM) 19, a working memory (RAM) 20, a data input/output port 21 which provides the means of communication with the data bus 12d, and a patch device 22 which is set up to provide a unique code identifying the loudspeaker station in question. Moreover, a control unit 23 is an analog output port which provides the gain control signal on the line 15.

The scheme of communication between the central station 10 and each loudspeaker station 11 may be elaborated to any extent desired, essentially by providing appropriate software in the program memory 19 at each loudspeaker station and a program memory in the central station. However, it suffices to consider a simple, basic pattern of communication according to which the central station transmits on the data highway 12d an address word followed by a control word. These words may be distinguished by the value of the most significant bit, for example. The address words match the identifying codes of the patch units 22 and, when a loudspeaker station 11 receives its own address code, it responds to the following control word. All other loudspeaker stations 11 ignore the control word. The control words need merely correspond to a plurality of preselected gain settings for the amplifier 14, including zero gain. Thus, to turn any given loudspeaker 13 off, the central station 10 merely has to send the address word corresponding to the loudspeaker station 11 in question, followed by the zero gain control word. The processor 17, acting under control of the program in its ROM 19 causes the control unit 23 to place the zero gain signal on the line 15. Similarly, to turn a loudspeaker 13 on, the address word is sent followed by a word establishing the desired gain for that loudspeaker. As a refinement on this simple scheme, the program may be arranged to store the current "on" gain for the amplifier 14 in the RAM 20. The central station 10 then merely sends "on" and "off" control words and an "on" control word causes the gain to be set to the value stored in the working memory 20. When this gain is found to be unsuitable, the central station 10 can send control words which adjust the stored gain value in the RAM 20 to a greater or smaller value, as desired.

Figure 1 also illustrates one way of implementing a test facility for each loudspeaker 13. Adjacent to the loudspeaker 13 is a microphone 24 which feeds an analog input port 25 by way of an amplifier 26. The port 25 is connected to the internal bus 16. To test any given any loudspeaker station 11, a tone is sent on the audio highway 12a with the relevant amplifier 14 turned up to the required gain. Provided the amplifier 14 and loudspeaker 13 are working satisfactorily, the microphone 24 will pick up a corresponding signal and the digital circuits are programmed to store a signal from the port 25 which can be referred to as an answering signal. This signal can be sent automatically to the central station on the data highway 12d or it can be sent in response to a polling request from the central station 10. In any event, it is possible to relay the answering signal back to the central station to show that the loudspeaker 13 is providing an acoustic output.

In an alternative embodiment (Figure 2) the microphone amplifier 26 is connected directly to the audio highway 12a. The amplifier 14 for the loudspeaker 13 has two mutually isolated inputs; for example a differential amplifier may be employed. The control unit 23 also controls a test tone generator 27 which is connected to the second input of the amplifier 14. In order to test a given loudspeaker 13, a digital signal is now sent from the central station 10 to cause the control unit 23 to enable the test tone generator 27. Provided the amplifier 14 and loudspeaker 13 are working properly, a signal is picked up by the microphone 24 and fed back to the audio highway 12a through the amplifier 26. This answering audio signal can be sensed at the central station. It will be seen that, in the case of Figure 1, testing is effected by sending out an audio test signal and receiving a digital answering signal. In Figure 2, a digital test signal is sent out and an audio answering signal is received. If both the analog input port 25 of Figure 1 and the test tone generator 27 of Figure 2 are employed, it is possible to send out a digital test signal and receive a digital answering signal.

Figure 3 shows one form of the central station 10. A microphone 30 is employed in making announcements and the audio highway 12a is driven by way of a preamplifier 31 and a power amplifier 32. The digital circuitry at the central station is in essence the same as that at each loudspeaker station 11. An internal bus 33 provides communication between a microprocessor 34, timing circuits 35, a program memory 36, a working memory 37 and a data input/output port 38 which provides the link with the data highway 12d. Naturally the program in the ROM 36 is different from the program in each of the ROMs 19 of the loudspeaker stations 11. In addition, it is necessary for the operator at the central station to be able to provide the commands which are necessary to turn loudspeakers on and off, adjust gains at loudspeaker stations and carry out test sequences. To this end a dedicated front panel may be provided but it is preferred to provide a keyboard 39 for keying in the required commands. For the embodiment of Figure 2, an analog input port 40 may be provided to sense the answering audio signal on the audio highway 12a. In either of the embodiments of Figures 1 and 2, it may be arranged that an answering loudspeaker station also sends back its own identifying address code as further confirmation that the addressed station is the one giving the answer that it is functioning correctly.

The detailed digital implementation need not be described since it will follow well known microprocessor techniques and essentially involves writing the correct operating programs to control the sending of address and control words from the central

station 10 in accordance with the commands entered at the keyboard 39.

Figure 4 shows one form of construction for a loudspeaker station. The cable highway 12 has branches for feeding the loudspeaker stations and one station is shown with a loudspeaker 43 having terminals 44 inside a rear housing 45. Within this housing there is provided a self-contained unit 46 connected between the cable highway branch 42 and the terminals 44. The unit 46 contains all of the digital and audio circuitry of the loudspeaker station and the pick up microphone 24.

In an alternative construction (Figure 5) the unit 46 is placed within a separate enclosure 47. This may be advantageous when embodying the invention in an existing PA system. It may also be desirable when complying with flameproofing requirements in hazardous locations.

As described above, control words are addressed to individual loudspeaker stations. However, it is possible, using known techniques, to address control words to groups of stations, to enable groups of loudspeakers to be simultaneously turned on and off.

CLAIMS

1. A public address system comprising a central station connected to a plurality of loudspeakers by a single cable highway capable of carrying both audio signals and digital signals, means at the central station for sending out digital signals identifying the loudspeakers individually, and control devices associated with the loudspeakers respectively and each including a switching device for switching the associated loudspeaker on or off and digital means responsive to digital signals addressed to the control device in question to operate the switching device.

2. A system according to claim 1, wherein the switching devices are variable gain devices operable under control of the digital means to establish the loudness level of the associated loudspeaker.

3. A system according to claim 1 or 2, wherein each loudspeaker has an associated microphone and the digital means are operative in a test mode to enable an answering signal to be returned to the central station from the microphone in response to a test signal applied to the loudspeaker.

4. A system according to claim 3, wherein the digital means control a test signal generator connected to the loudspeaker.

5. A system according to claim 3 or 4, wherein the digital means include an analog input port connected to receive a signal from the microphone.

6. A public address system substantially as hereinbefore described with reference to and as illustrated in Figure 1 or Figure 1 taken in conjunction with any of Figures 2 to 5 of the accompanying drawings.

Printed for Her Majesty's Stationery Office, by Croydon Printing Company Limited, Croydon, Surrey, 1984.
Published by The Patent Office, 25 Southampton Buildings, London, WC2A 1AY, from which copies may be obtained.

Electronic Acknowledgement Receipt

EFS ID:	7482578
Application Number:	12565909
International Application Number:	
Confirmation Number:	1417
Title of Invention:	AUDIO DEVICE, AV SYSTEM HAVING THE AUDIO DEVICE, AND METHOD TO CONTROL THE AUDIO DEVICE
First Named Inventor/Applicant Name:	Jong Taek YOON
Customer Number:	38209
Filer:	Patrick J. Stanzione/Odetta King
Filer Authorized By:	Patrick J. Stanzione
Attorney Docket Number:	103-1339
Receipt Date:	26-APR-2010
Filing Date:	24-SEP-2009
Time Stamp:	12:29:03
Application Type:	Utility under 35 USC 111(a)

Payment information:

Submitted with Payment	no

File Listing:

Document Number	Document Description	File Name	File Size(Bytes)/ Message Digest	Multi Part /.zip	Pages (if appl.)
1	Information Disclosure Statement (IDS) Filed (SB/08)	US_IDS_Form_SB_08a1.pdf	612426 94bdd2ed10b16b7d7c2b15a8c81bfe117521da45	no	4

Warnings:

Information:

2	NPL Documents	EP_SEARCH.pdf	406712 b1a34845935e4140b31071d8153b4bc0642d8e7b	no	7
Warnings:					
Information:					
3	NPL Documents	XP002572036.pdf	415378 fe2dc0804828337ecf96669afce69dbee4f9f4cb	no	6
Warnings:					
Information:					
4	Foreign Reference	GB2123193.pdf	436973 46d88e0ec623df4eaaf640dbae8518f7576b1710	no	7
Warnings:					
Information:					
		Total Files Size (in bytes):	1871489		

This Acknowledgement Receipt evidences receipt on the noted date by the USPTO of the indicated documents, characterized by the applicant, and including page counts, where applicable. It serves as evidence of receipt similar to a Post Card, as described in MPEP 503.

<u>New Applications Under 35 U.S.C. 111</u>
If a new application is being filed and the application includes the necessary components for a filing date (see 37 CFR 1.53(b)-(d) and MPEP 506), a Filing Receipt (37 CFR 1.54) will be issued in due course and the date shown on this Acknowledgement Receipt will establish the filing date of the application.

<u>National Stage of an International Application under 35 U.S.C. 371</u>
If a timely submission to enter the national stage of an international application is compliant with the conditions of 35 U.S.C. 371 and other applicable requirements a Form PCT/DO/EO/903 indicating acceptance of the application as a national stage submission under 35 U.S.C. 371 will be issued in addition to the Filing Receipt, in due course.

<u>New International Application Filed with the USPTO as a Receiving Office</u>
If a new international application is being filed and the international application includes the necessary components for an international filing date (see PCT Article 11 and MPEP 1810), a Notification of the International Application Number and of the International Filing Date (Form PCT/RO/105) will be issued in due course, subject to prescriptions concerning national security, and the date shown on this Acknowledgement Receipt will establish the international filing date of the application.

UNITED STATES PATENT AND TRADEMARK OFFICE

UNITED STATES DEPARTMENT OF COMMERCE
United States Patent and Trademark Office
Address: COMMISSIONER FOR PATENTS
P.O. Box 1450
Alexandria, Virginia 22313-1450
www.uspto.gov

APPLICATION NUMBER	FILING or 371(c) DATE	GRP ART UNIT	FIL FEE REC'D	ATTY.DOCKET.NO	TOT CLAIMS	IND CLAIMS
12/565,909	09/24/2009	2618	2258	103-1339	34	5

CONFIRMATION NO. 1417

38209
STANZIONE & KIM, LLP
919 18TH STREET, N.W.
SUITE 440
WASHINGTON, DC 20006

FILING RECEIPT

OC000000038146563

Date Mailed: 10/14/2009

Receipt is acknowledged of this non-provisional patent application. The application will be taken up for examination in due course. Applicant will be notified as to the results of the examination. Any correspondence concerning the application must include the following identification information: the U.S. APPLICATION NUMBER, FILING DATE, NAME OF APPLICANT, and TITLE OF INVENTION. Fees transmitted by check or draft are subject to collection. Please verify the accuracy of the data presented on this receipt. **If an error is noted on this Filing Receipt, please submit a written request for a Filing Receipt Correction. Please provide a copy of this Filing Receipt with the changes noted thereon. If you received a "Notice to File Missing Parts" for this application, please submit any corrections to this Filing Receipt with your reply to the Notice. When the USPTO processes the reply to the Notice, the USPTO will generate another Filing Receipt incorporating the requested corrections**

Applicant(s)

Jong Taek YOON, Suwon-si, KOREA, REPUBLIC OF;
Hag Do Kim, Suwon-si, KOREA, REPUBLIC OF;

Assignment For Published Patent Application

Samsung Electronics Co., Ltd, Suwon-si, KOREA, REPUBLIC OF

Power of Attorney: The patent practitioners associated with Customer Number 38209

Domestic Priority data as claimed by applicant

Foreign Applications

REPUBLIC OF KOREA 2009-1234 01/07/2009

Permission to Access - A proper **Authorization to Permit Access to Application by Participating Offices** (PTO/SB/39 or its equivalent) has been received by the USPTO.

Request to Retrieve - This application either claims priority to one or more applications filed in an intellectual property Office that participates in the Priority Document Exchange (PDX) program or contains a proper **Request to Retrieve Electronic Priority Application(s)** (PTO/SB/38 or its equivalent). Consequently, the USPTO will attempt to electronically retrieve these priority documents.

If Required, Foreign Filing License Granted: 10/06/2009

The country code and number of your priority application, to be used for filing abroad under the Paris Convention, is **US 12/565,909**

Projected Publication Date: 07/08/2010

Non-Publication Request: No

Early Publication Request: No
Title

AUDIO DEVICE, AV SYSTEM HAVING THE AUDIO DEVICE, AND METHOD TO CONTROL THE AUDIO DEVICE

Preliminary Class

455

PROTECTING YOUR INVENTION OUTSIDE THE UNITED STATES

Since the rights granted by a U.S. patent extend only throughout the territory of the United States and have no effect in a foreign country, an inventor who wishes patent protection in another country must apply for a patent in a specific country or in regional patent offices. Applicants may wish to consider the filing of an international application under the Patent Cooperation Treaty (PCT). An international (PCT) application generally has the same effect as a regular national patent application in each PCT-member country. The PCT process **simplifies** the filing of patent applications on the same invention in member countries, but **does not result** in a grant of "an international patent" and does not eliminate the need of applicants to file additional documents and fees in countries where patent protection is desired.

Almost every country has its own patent law, and a person desiring a patent in a particular country must make an application for patent in that country in accordance with its particular laws. Since the laws of many countries differ in various respects from the patent law of the United States, applicants are advised to seek guidance from specific foreign countries to ensure that patent rights are not lost prematurely.

Applicants also are advised that in the case of inventions made in the United States, the Director of the USPTO must issue a license before applicants can apply for a patent in a foreign country. The filing of a U.S. patent application serves as a request for a foreign filing license. The application's filing receipt contains further information and guidance as to the status of applicant's license for foreign filing.

Applicants may wish to consult the USPTO booklet, "General Information Concerning Patents" (specifically, the section entitled "Treaties and Foreign Patents") for more information on timeframes and deadlines for filing foreign patent applications. The guide is available either by contacting the USPTO Contact Center at 800-786-9199, or it can be viewed on the USPTO website at http://www.uspto.gov/web/offices/pac/doc/general/index.html.

For information on preventing theft of your intellectual property (patents, trademarks and copyrights), you may wish to consult the U.S. Government website, http://www.stopfakes.gov. Part of a Department of Commerce initiative, this website includes self-help "toolkits" giving innovators guidance on how to protect intellectual property in specific countries such as China, Korea and Mexico. For questions regarding patent enforcement issues, applicants may call the U.S. Government hotline at 1-866-999-HALT (1-866-999-4158).

LICENSE FOR FOREIGN FILING UNDER

Title 35, United States Code, Section 184

Title 37, Code of Federal Regulations, 5.11 & 5.15

GRANTED

The applicant has been granted a license under 35 U.S.C. 184, if the phrase "IF REQUIRED, FOREIGN FILING LICENSE GRANTED" followed by a date appears on this form. Such licenses are issued in all applications where the conditions for issuance of a license have been met, regardless of whether or not a license may be required as set forth in 37 CFR 5.15. The scope and limitations of this license are set forth in 37 CFR 5.15(a) unless an earlier license has been issued under 37 CFR 5.15(b). The license is subject to revocation upon written notification. The date indicated is the effective date of the license, unless an earlier license of similar scope has been granted under 37 CFR 5.13 or 5.14.

This license is to be retained by the licensee and may be used at any time on or after the effective date thereof unless it is revoked. This license is automatically transferred to any related applications(s) filed under 37 CFR 1.53(d). This license is not retroactive.

The grant of a license does not in any way lessen the responsibility of a licensee for the security of the subject matter as imposed by any Government contract or the provisions of existing laws relating to espionage and the national security or the export of technical data. Licensees should apprise themselves of current regulations especially with respect to certain countries, of other agencies, particularly the Office of Defense Trade Controls, Department of State (with respect to Arms, Munitions and Implements of War (22 CFR 121-128)); the Bureau of Industry and Security, Department of Commerce (15 CFR parts 730-774); the Office of Foreign AssetsControl, Department of Treasury (31 CFR Parts 500+) and the Department of Energy.

NOT GRANTED

No license under 35 U.S.C. 184 has been granted at this time, if the phrase "IF REQUIRED, FOREIGN FILING LICENSE GRANTED" DOES NOT appear on this form. Applicant may still petition for a license under 37 CFR 5.12, if a license is desired before the expiration of 6 months from the filing date of the application. If 6 months has lapsed from the filing date of this application and the licensee has not received any indication of a secrecy order under 35 U.S.C. 181, the licensee may foreign file the application pursuant to 37 CFR 5.15(b).

PTO/SB/05 (04-05)
Approved for use through 07/31/2006. OMB 0651-0032
U.S. Patent and Trademark Office. U.S. DEPARTMENT OF COMMERCE
Under the Paperwork Reduction Act of 1995, no persons are required to respond to a collection of information unless it displays a valid OMB control number.

UTILITY PATENT APPLICATION TRANSMITTAL

(Only for new nonprovisional applications under 37 CFR 1.53(b))

Attorney Docket No.	103-1339
First Inventor	Jong Taek YOON et al.
Title	Audio Device, AV System Having....
Express Mail Label No.	

APPLICATION ELEMENTS

See MPEP chapter 600 concerning utility patent application contents.

ADDRESS TO: **Commissioner for Patents**
P.O. Box 1450
Alexandria VA 22313-1450

1. ☑ **Fee Transmittal Form** (e.g., PTO/SB/17)
   (Submit an original and a duplicate for fee processing)
2. ☐ **Applicant claims small entity status**. See 37 CFR 1.27.
3. ☑ **Specification** [*Total Pages* 19]
   Both the claims and abstract must start on a new page
   (For information on the preferred arrangement, see MPEP 608.01(a))
4. ☑ **Drawing(s)** (*35 U.S.C. 113*) [*Total Sheets* 3]
5. **Oath or Declaration** [*Total Sheets* 2]
   a. ☑ Newly executed (original or copy)
   b. ☐ A copy from a prior application (37 CFR 1.63(d))
   (for continuation/divisional with Box 18 completed)
   i. ☐ DELETION OF INVENTOR(S)
   Signed statement attached deleting inventor(s) name in the prior application, see 37 CFR 1.63(d)(2) and 1.33(b).
6. ☐ **Application Data Sheet.** See 37 CFR 1.76
7. ☐ **CD-ROM or CD-R** in duplicate, large table or Computer Program *(Appendix)*
   ☐ Landscape Table on CD
8. **Nucleotide and/or Amino Acid Sequence Submission**
   (if applicable, items a. – c. are required)
   a. ☐ Computer Readable Form (CRF)
   b. Specification Sequence Listing on:
      i. ☐ CD-ROM or CD-R (2 copies); or
      ii. ☐ Paper
   c. ☐ Statements verifying identity of above copies

ACCOMPANYING APPLICATION PARTS

9. ☑ **Assignment Papers** (cover sheet & document(s))
   Name of Assignee Samsung Electronics Co., Ltd
   Suwon-si, Republic of Korea
10. ☐ **37 CFR 3.73(b) Statement** *(when there is an assignee)* ☑ **Power of Attorney**
11. ☐ **English Translation Document** *(if applicable)*
12. ☑ **Information Disclosure Statement** (PTO/SB/08 or PTO-1449)
    ☑ Copies of citations attached
13. ☐ **Preliminary Amendment**
14. ☐ **Return Receipt Postcard** (MPEP 503)
    (*Should be specifically itemized)*
15. ☐ **Certified Copy of Priority Document(s)**
    (if foreign priority is claimed)
16. ☐ **Nonpublication Request** under 35 U.S.C. 122(b)(2)(B)(i). Applicant must attach form PTO/SB/35 or equivalent.
17. ☐ Other:_____

18. If a CONTINUING APPLICATION, *check appropriate box, and supply the requisite information below and in the first sentence of the specification following the title, or in an Application Data Sheet under 37 CFR 1.76:*

☐ Continuation ☐ Divisional ☐ Continuation-in-part (CIP) of prior application No.: .....

Prior application information: *Examiner* _____ *Art Unit:* _____

19. CORRESPONDENCE ADDRESS

☑ The address associated with Customer Number: 38209 ***OR*** ☐ Correspondence address below

Name	Stanzione & Kim, LLP				
Address	919 18th St., NW, Suite 440				
City	Washington	State	DC	Zip Code	20006
Country	USA	Telephone	202-775-1900	Email	patent@snkiplaw.com

Signature	/Patrick J. Stanzione/	Date	September 24, 2009
Name (Print/Type)	Patrick J. Stanzione	Registration No. (Attorney/Agent)	40,434

This collection of information is required by 37 CFR 1.53(b). The information is required to obtain or retain a benefit by the public which is to file (and by the USPTO to process) an application. Confidentiality is governed by 35 U.S.C. 122 and 37 CFR 1.11 and 1.14. This collection is estimated to take 12 minutes to complete, including gathering, preparing, and submitting the completed application form to the USPTO. Time will vary depending upon the individual case. Any comments on the amount of time you require to complete this form and/or suggestions for reducing this burden, should be sent to the Chief Information Officer, U.S. Patent and Trademark Office, U.S. Department of Commerce, P.O. Box 1450, Alexandria, VA 22313-1450. DO NOT SEND FEES OR COMPLETED FORMS TO THIS ADDRESS. **SEND TO: Commissioner for Patents, P.O. Box 1450, Alexandria, VA 22313-1450.**
If you need assistance in completing the form, call 1-800-PTO-9199 and select option 2.

Privacy Act Statement

The **Privacy Act of 1974 (P.L. 93-579)** requires that you be given certain information in connection with your submission of the attached form related to a patent application or patent. Accordingly, pursuant to the requirements of the Act, please be advised that: (1) the general authority for the collection of this information is 35 U.S.C. 2(b)(2); (2) furnishing of the information solicited is voluntary; and (3) the principal purpose for which the information is used by the U.S. Patent and Trademark Office is to process and/or examine your submission related to a patent application or patent. If you do not furnish the requested information, the U.S. Patent and Trademark Office may not be able to process and/or examine your submission, which may result in termination of proceedings or abandonment of the application or expiration of the patent.

The information provided by you in this form will be subject to the following routine uses:

1. The information on this form will be treated confidentially to the extent allowed under the Freedom of Information Act (5 U.S.C. 552) and the Privacy Act (5 U.S.C 552a). Records from this system of records may be disclosed to the Department of Justice to determine whether disclosure of these records is required by the Freedom of Information Act.
2. A record from this system of records may be disclosed, as a routine use, in the course of presenting evidence to a court, magistrate, or administrative tribunal, including disclosures to opposing counsel in the course of settlement negotiations.
3. A record in this system of records may be disclosed, as a routine use, to a Member of Congress submitting a request involving an individual, to whom the record pertains, when the individual has requested assistance from the Member with respect to the subject matter of the record.
4. A record in this system of records may be disclosed, as a routine use, to a contractor of the Agency having need for the information in order to perform a contract. Recipients of information shall be required to comply with the requirements of the Privacy Act of 1974, as amended, pursuant to 5 U.S.C. 552a(m).
5. A record related to an International Application filed under the Patent Cooperation Treaty in this system of records may be disclosed, as a routine use, to the International Bureau of the World Intellectual Property Organization, pursuant to the Patent Cooperation Treaty.
6. A record in this system of records may be disclosed, as a routine use, to another federal agency for purposes of National Security review (35 U.S.C. 181) and for review pursuant to the Atomic Energy Act (42 U.S.C. 218(c)).
7. A record from this system of records may be disclosed, as a routine use, to the Administrator, General Services, or his/her designee, during an inspection of records conducted by GSA as part of that agency's responsibility to recommend improvements in records management practices and programs, under authority of 44 U.S.C. 2904 and 2906. Such disclosure shall be made in accordance with the GSA regulations governing inspection of records for this purpose, and any other relevant (*i.e.*, GSA or Commerce) directive. Such disclosure shall not be used to make determinations about individuals.
8. A record from this system of records may be disclosed, as a routine use, to the public after either publication of the application pursuant to 35 U.S.C. 122(b) or issuance of a patent pursuant to 35 U.S.C. 151. Further, a record may be disclosed, subject to the limitations of 37 CFR 1.14, as a routine use, to the public if the record was filed in an application which became abandoned or in which the proceedings were terminated and which application is referenced by either a published application, an application open to public inspection or an issued patent.
9. A record from this system of records may be disclosed, as a routine use, to a Federal, State, or local law enforcement agency, if the USPTO becomes aware of a violation or potential violation of law or regulation.

PTO/SB/08a (08-03)
Approved for use through 07/31/2006. OMB 0651-0031
U.S. Patent and Trademark Office; U.S. DEPARTMENT OF COMMERCE
Under the Paperwork Reduction Act of 1995, no persons are required to respond to a collection of information unless it contains a valid OMB control number.

INFORMATION DISCLOSURE STATEMENT BY APPLICANT

(Not for submission under 37 CFR 1.99)

Application Number	
Filing Date	2009-09-24
First Named Inventor	Jong Taek YOON et al.
Art Unit	
Examiner Name	
Attorney Docket Number	103-1339

U.S.PATENTS Remove

Examiner Initial*	Cite No	Patent Number	Kind Code[1]	Issue Date	Name of Patentee or Applicant of cited Document	Pages,Columns,Lines where Relevant Passages or Relevant Figures Appear
	1					

If you wish to add additional U.S. Patent citation information please click the Add button. Add

U.S.PATENT APPLICATION PUBLICATIONS Remove

Examiner Initial*	Cite No	Publication Number	Kind Code[1]	Publication Date	Name of Patentee or Applicant of cited Document	Pages,Columns,Lines where Relevant Passages or Relevant Figures Appear
	1					

If you wish to add additional U.S. Published Application citation information please click the Add button. Add

FOREIGN PATENT DOCUMENTS Remove

Examiner Initial*	Cite No	Foreign Document Number[3]	Country Code[2] ¡	Kind Code[4]	Publication Date	Name of Patentee or Applicant of cited Document	Pages,Columns,Lines where Relevant Passages or Relevant Figures Appear	T[5]
	1	2005-96713	KR		2005-10-06	LG Electronics Inc	abstract	☒

If you wish to add additional Foreign Patent Document citation information please click the Add button Add

NON-PATENT LITERATURE DOCUMENTS Remove

Examiner Initials*	Cite No	Include name of the author (in CAPITAL LETTERS), title of the article (when appropriate), title of the item (book, magazine, journal, serial, symposium, catalog, etc), date, pages(s), volume-issue number(s), publisher, city and/or country where published.	T[5]

INFORMATION DISCLOSURE STATEMENT BY APPLICANT (Not for submission under 37 CFR 1.99)	Application Number	
	Filing Date	2009-09-24
	First Named Inventor	Jong Taek YOON et al.
	Art Unit	
	Examiner Name	
	Attorney Docket Number	103-1339

	1		☐

If you wish to add additional non-patent literature document citation information please click the Add button Add

EXAMINER SIGNATURE

Examiner Signature		Date Considered	

*EXAMINER: Initial if reference considered, whether or not citation is in conformance with MPEP 609. Draw line through a citation if not in conformance and not considered. Include copy of this form with next communication to applicant.

[1] See Kind Codes of USPTO Patent Documents at www.USPTO.GOV or MPEP 901.04. [2] Enter office that issued the document, by the two-letter code (WIPO Standard ST.3). [3] For Japanese patent documents, the indication of the year of the reign of the Emperor must precede the serial number of the patent document. [4] Kind of document by the appropriate symbols as indicated on the document under WIPO Standard ST.16 if possible. [5] Applicant is to place a check mark here if English language translation is attached.

INFORMATION DISCLOSURE STATEMENT BY APPLICANT (Not for submission under 37 CFR 1.99)	Application Number	
	Filing Date	2009-09-24
	First Named Inventor	Jong Taek YOON et al.
	Art Unit	
	Examiner Name	
	Attorney Docket Number	103-1339

CERTIFICATION STATEMENT

Please see 37 CFR 1.97 and 1.98 to make the appropriate selection(s):

☐ That each item of information contained in the information disclosure statement was first cited in any communication from a foreign patent office in a counterpart foreign application not more than three months prior to the filing of the information disclosure statement. See 37 CFR 1.97(e)(1).

OR

☐ That no item of information contained in the information disclosure statement was cited in a communication from a foreign patent office in a counterpart foreign application, and, to the knowledge of the person signing the certification after making reasonable inquiry, no item of information contained in the information disclosure statement was known to any individual designated in 37 CFR 1.56(c) more than three months prior to the filing of the information disclosure statement. See 37 CFR 1.97(e)(2).

☐ See attached certification statement.

☐ Fee set forth in 37 CFR 1.17 (p) has been submitted herewith.

☒ None

SIGNATURE

A signature of the applicant or representative is required in accordance with CFR 1.33, 10.18. Please see CFR 1.4(d) for the form of the signature.

Signature	/Patrick J. Stanzione/	Date (YYYY-MM-DD)	2009-09-24
Name/Print	Patrick J. Stanzione	Registration Number	40434

This collection of information is required by 37 CFR 1.97 and 1.98. The information is required to obtain or retain a benefit by the public which is to file (and by the USPTO to process) an application. Confidentiality is governed by 35 U.S.C. 122 and 37 CFR 1.14. This collection is estimated to take 1 hour to complete, including gathering, preparing and submitting the completed application form to the USPTO. Time will vary depending upon the individual case. Any comments on the amount of time you require to complete this form and/or suggestions for reducing this burden, should be sent to the Chief Information Officer, U.S. Patent and Trademark Office, U.S. Department of Commerce, P.O. Box 1450, Alexandria, VA 22313-1450. DO NOT SEND FEES OR COMPLETED FORMS TO THIS ADDRESS. **SEND TO: Commissioner for Patents, P.O. Box 1450, Alexandria, VA 22313-1450.**

Privacy Act Statement

The Privacy Act of 1974 (P.L. 93-579) requires that you be given certain information in connection with your submission of the attached form related to a patent application or patent. Accordingly, pursuant to the requirements of the Act, please be advised that: (1) the general authority for the collection of this information is 35 U.S.C. 2(b)(2); (2) furnishing of the information solicited is voluntary; and (3) the principal purpose for which the information is used by the U.S. Patent and Trademark Office is to process and/or examine your submission related to a patent application or patent. If you do not furnish the requested information, the U.S. Patent and Trademark Office may not be able to process and/or examine your submission, which may result in termination of proceedings or abandonment of the application or expiration of the patent.

The information provided by you in this form will be subject to the following routine uses:

1. The information on this form will be treated confidentially to the extent allowed under the Freedom of Information Act (5 U.S.C. 552) and the Privacy Act (5 U.S.C. 552a). Records from this system of records may be disclosed to the Department of Justice to determine whether the Freedom of Information Act requires disclosure of these record s.

2. A record from this system of records may be disclosed, as a routine use, in the course of presenting evidence to a court, magistrate, or administrative tribunal, including disclosures to opposing counsel in the course of settlement negotiations.

3. A record in this system of records may be disclosed, as a routine use, to a Member of Congress submitting a request involving an individual, to whom the record pertains, when the individual has requested assistance from the Member with respect to the subject matter of the record.

4. A record in this system of records may be disclosed, as a routine use, to a contractor of the Agency having need for the information in order to perform a contract. Recipients of information shall be required to comply with the requirements of the Privacy Act of 1974, as amended, pursuant to 5 U.S.C. 552a(m).

5. A record related to an International Application filed under the Patent Cooperation Treaty in this system of records may be disclosed, as a routine use, to the International Bureau of the World Intellectual Property Organization, pursuant to the Patent Cooperation Treaty.

6. A record in this system of records may be disclosed, as a routine use, to another federal agency for purposes of National Security review (35 U.S.C. 181) and for review pursuant to the Atomic Energy Act (42 U.S.C. 218(c)).

7. A record from this system of records may be disclosed, as a routine use, to the Administrator, General Services, or his/her designee, during an inspection of records conducted by GSA as part of that agency's responsibility to recommend improvements in records management practices and programs, under authority of 44 U.S.C. 2904 and 2906. Such disclosure shall be made in accordance with the GSA regulations governing inspection of records for this purpose, and any other relevant (i.e., GSA or Commerce) directive. Such disclosure shall not be used to make determinations about individuals.

8. A record from this system of records may be disclosed, as a routine use, to the public after either publication of the application pursuant to 35 U.S.C. 122(b) or issuance of a patent pursuant to 35 U.S.C. 151. Further, a record may be disclosed, subject to the limitations of 37 CFR 1.14, as a routine use, to the public if the record was filed in an application which became abandoned or in which the proceedings were terminated and which application is referenced by either a published application, an application open to public inspections or an issued patent.

9. A record from this system of records may be disclosed, as a routine use, to a Federal, State, or local law enforcement agency, if the USPTO becomes aware of a violation or potential violation of law or regulation.

(19) KOREAN INTELLECTUAL PROPERTY OFFICE

KOREAN PATENT ABSTRACTS

(11)Publication number: 1020050096713 A
(43)Date of publication of application: 06.10.2005

(21)Application number: 1020040022375
(22)Date of filing: 31.03.2004
(30)Priority: ..
(51)Int. Cl G11B 20/10

(71)Applicant: LG ELECTRONICS INC.
(72)Inventor: CHO, CHOEN KWON

(54) APPARATUS FOR CONTROLLING THE POWER OF AN EXTERNAL DEVICE IN AN AUDIO RECEIVER, SPECIALLY WITH REGARDS TO SUPPLYING POWER TO THE EXTERNAL DEVICE WHILE THE AUDIO RECEIVER IS OPERATED, BY INTERWORKING THE EXTERNAL DEVICE WITH THE AUDIO RECEIVER TO CONTROL THE POWER

(57) Abstract:

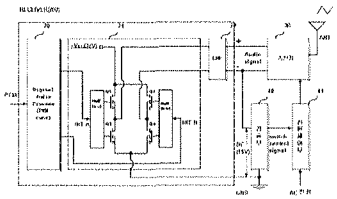

PURPOSE: An apparatus for controlling the power of an external device in an audio receiver is provided to detect a voltage level or an audio signal outputted from the audio receiver, and to control the power of the external device by interworking the audio receiver with the external device, according to the detected signal. CONSTITUTION: An audio receiver(200) includes a power controlling device for controlling whether to apply AC power to a transmitter(30) used for a wireless speaker. The power controlling device comprises as follows. A detector(40) detects a voltage level, according as the predetermined voltage level is applied from an output end that outputs an audio signal filtered in an audio frequency band to the transmitter(30). A power controller(41) controls the supply of power to an external device according to the detected voltage level.

copyright KIPO 2006

Legal Status
Date of request for an examination (20090324)
Notification date of refusal decision (00000000)
Final disposal of an application (application)
Date of final disposal of an application (00000000)
Patent registration number ( )
Date of registration (00000000)
Number of opposition against the grant of a patent ( )
Date of opposition against the grant of a patent (00000000)
Number of trial against decision to refuse ( )

Date of requesting trial against decision to refuse ( )
Date of extinction of right ( )

(19)대한민국특허청(KR)
(12) 공개특허공보(A)

(51) 。Int. Cl.7
G11B 20/10

(11) 공개번호 10-2005-0096713
(43) 공개일자 2005년10월06일

(21) 출원번호 10-2004-0022375
(22) 출원일자 2004년03월31일

(71) 출원인 엘지전자 주식회사
서울특별시 영등포구 여의도동 20번지

(72) 발명자 조천관
인천광역시남구문학동357-3번지신동아맨션B동102호

(74) 대리인 박래봉

심사청구 : 없음

(54) 오디오 리시버에서의 외부기기 전원 제어장치

요약

본 발명은 오디오 리시버에서의 외부기기 전원 제어장치에 관한 것으로, 데이터 저장매체로부터 독출된 오디오 데이터를 증폭 및 저역통과시켜 가청주파수대의 오디오 신호를 생성하는 오디오 리시버에 있어서, 상기 오디오 리시버에서 외부기기로 출력되는 오디오 신호나 또는, 전압레벨을 검출하는 검출수단와, 상기 검출된 오디오 신호나 또는 전압레벨에 따라, 상기 외부기기로의 전원공급을 제어하는 제어수단을 포함으로써, 무선 스피커용 송신기 등과 같은 외부기기를 상기 오디오 리시버와 연결하여 사용하는 경우, 상기 외부기기를 상기 오디오 리시버와 연동하여 전원제어되게 하여 상기 오디오 리시버의 동작시에 상기 외부기기에 전원공급하게함과 아울러, 별도의 수동조작없이 자동으로 전원제어할 수 있도록 하는 매우 유용한 발명인 것이다.

대표도

도 3

색인어

오디오 리시버, 디지털 오디오 처리부, 디지털 증폭부, 검출부, 전원 제어부

명세서

도면의 간단한 설명

도 1은 일반적인 오디오 데이터 재생장치에 대한 구성에 구성을 도시한 것이고,

도 2는 일반적인 오디오 데이터 재생장치에서 외부기기를 구비한 오디오 리시버에 대한 구성을 도시한 것이고,

도 3은 본 발명의 일 실시예에 따른 오디오 리시버에서의 외부기기 전원 제어장치에 대한 구성을 도시한 것이고,

도 4는 본 발명에 다른 실시예에 따른 오디오 리시버에서의 외부기기 전원 제어장치에 대한 구성을 도시한 것이다.

※도면의 주요부분에 대한 부호의 설명※

10: 광디스크 11 : 디스크 독출부

12: 디코더부 20: 디지털 오디오 처리부

21: 디지털 증폭부 22: 저역통과필터

30: 무선 스피커용 송신기 31: 무선 스피커용 수신기

100: 광디스크 플레이어 200: 오디오 리시버

300: 스피커 301: 무선용 스피커

발명의 상세한 설명

발명의 목적

발명이 속하는 기술 및 그 분야의 종래기술

본 발명은 오디오 리시버에서의 외부기기 전원 제어장치에 관한 것으로, 예를 들어 디브이디(DVD) 또는 씨디(CD) 등과 같은 광디스크로부터 독출 재생되는 디지털 오디오 데이터를 증폭 및 저역통과시켜 가청주파수대의 오디오 신호를 생성하는 오디오 리시버에 있어서, 무선 스피커용 송신기와 같은 외부기기를 상기 오디오 리시버와 연동하여 전원 제어할 수 있도록 하기 위한 오디오 리시버에서의 외부기기 전원 제어장치에 관한 것이다.

도 1은 일반적인 오디오 데이터 재생장치에 대한 구성을 도시한 것으로, 상기 오디오 데이터 재생장치에는, 광디스크 플레이어(100)와, 오디오 리시버(200) 그리고 스피커(300)가 포함하여 구성되어 있다.

그리고, 상기 광디스크 플레이어(100)에서는, 디브이디(DVD) 또는 씨디(CD) 등과 같은 광디스(10)에 기록된 오디오 데이터를 독출하는 디스크 독출부(11); 상기 디스크독출부에 의해 독출되는 SPDIF(Sony philips Digital Format) 오디오 데이터를 원래의 오디오 데이터로 디코딩하여 PCM(Pulse Code Modulation) 오디오 신호를 출력하는 디코터(12)가 포함 구성될 수 있다.

또한, 상기 오디오 리시버(200)에서는, 상기 광디스크 플레이어(100)에서 출력되는 PCM 오디오 데이터를 PWM 오디오 데이터로 변환 처리하는 디지털 오디오 처리부(20)와, 상기 변환된 디지털 오디오 신호를 디지털 증폭하는 디지털 증폭부(21); 상기 디지털 증폭된 디지털 오디오 신호를 가청주파수대역으로 필터링하여 스피커에 출력하는 저역통과필터(22)가 포함 구성될 수 있다.

이에 따라, 상기와 같이 구성되는 오디오 데이터 재생장치를 구비한 사용자가, 디브이디 또는 씨디 등과 같은 광디스크를 장치내에 삽입 안착시킨 상태에서, 오디오 재생 동작을 선택 지정하게 되는 경우, 상기 광디스크 플레이어(100)는 광디스크에 기록된 오디오 데이터를 독출 및 디코딩하여 PCM 오디오 데이터를 출력하게 되며, 상기 PCM 오디오 데이터는, 상기 오디오 리시버(200)의 디지털 오디오 처리부(20)에 의해 구형파 펄스 디지털 펄스의 디지털 오디오 데이터인 PWM 오디오 데이터로 변환되는데. 이때 상기 변환된 PWM 오디오 데이터는, 상기 디지털 증폭부(21)에 의해 디지털 증폭된 후, 상기 저역통과필터(22)를 걸쳐 가청 주파수의 소리음으로 스피커(301)를 통해 재생 출력된다.

한편, 도 2는 일반적인 오디오 데이터 재생장치에서 외부기기를 구비한 오디오 리시버에 대한 구성을 도시한 것으로, 상기 오디오 데이터 재생장치에서는, 도 1에서의 광디스크 플레이어(100)에서 PCM 오디오 데이터를 받아 PWM 오디오 데이터로 변환 및 증폭하여, 가청주파수대역의 오디오 신호를 출력하는 오디오 리시버(200)와, 상기 오디오 신호를 무선 데이터로 변환하여 무선 송신하는 무선 스피커용 송신기(30)와, 상기 무선 데이터를 수신하여 소리음으로 무선 스피커(301)를 통해 재생 출력하는 무선 스피커용 수신기(31)를 포함하여 구성될 수 있다.

이에 따라, 상기와 같이 무선 스피커용 송수신기를 구비한 사용자는, 상기 광디스크 플레이어로부터 PCM 오디오 데이터를 수신하는 상태에서, 무선 스피커를 통해 오디오 재생동작을 선택 지정하게 되는 경우, 상기 오디오 리시버에서 출력되는 오디오 신호(Audio signal)를 무선 송출하여 원거리에 있는 무선 스피커(301)를 통해 재생 출력된다.

그러나, 상기와 같이 구성되는 오디오 데이터 재생장치에 있어서, 도 2에 도시한 바와 같이, 상기 무선 스피커용 송신기(30)와 같은 외부기기가 상기 오디오 리시버로부터 전원제어되는 것이 아닌 독립하여 AC전원을 제공받기에, 상기 오디오 리시버를 사용하지 않는 동안에도 상기 외부기기는 구동되어 전력소모가 발생할 수 있으며, 또한 사용자가 상기 오디오 리시버(200)를 사용하거나 또는, 사용하지 않을 경우, 상기 외부기기에 대하여서도 별도의 수동조작에 의해 상기 AC전원의 인가를 온/오프시켜야 한다는 문제점이 있다.

발명이 이루고자 하는 기술적 과제

따라서, 본 발명은 상기와 같은 문제점을 해결하기 위하여 창작된 것으로서, 오디오 리시버에서 출력되는 오디오 신호 또는 전압레벨을 검출하여, 상기 검출된 신호에 따라, 상기 오디오 리시버와 연동하여 상기 외부기기를 전원제어하도록 하는 오디오 리시버에서의 외부기기 전원 제어장치를 제공하는 데, 그 목적이 있는 것이다.

발명의 구성 및 작용

상기와 같은 목적을 달성하기 위한 본 발명에 따른 오디오 리시버에서의 외부기기 전원 제어장치는, 오디오 리시버에서 외부기기로 출력되는 오디오 신호나 또는, 전압레벨을 검출하는 검출수단; 및 상기 검출된 오디오 신호나 또는 전압레벨에 따라, 상기 외부기기로의 전원공급을 제어하는 제어수단을 포함하여 구성되는 것을 특징으로 한다.

이하, 본 발명에 따른 오디오 리시버에서의 외부기기 전원 제어장치에 대한 바람직한 실시예에 대해, 첨부된 도면을 참조하여 상세히 설명한다.

도 3은 본 발명의 일 실시예에 따른 오디오 리시버에서의 외부기기 전원 제어장치에 대한 구성을 도시한 것으로, 먼저 도 2를 참조로 전술한 바와 같이, 상기 오디오 데이터 재생장치에서는, 광디스크 플레이어에서 PCM 오디오 데이터를 받아 PWM 오디오 데이터로 변환 및 증폭하여, 가청주파수대역의 오디오 신호를 출력하는 오디오 리시버(200)와, 상기 오디오 신호를 무선 데이터로 변환하여 무선 송신하는 무선 스피커용 송신기(30)와, 상기 무선 데이터를 수신하여 소리음으로 무선 스피커를 통해 재생 출력하는 무선 스피커용 수신기를 포함하여 구성된다.

또한, 상기 오디오 리시버(200)는, 상기 광디스크 플레이어에서 출력되는 PCM 오디오 데이터를 PWM 오디오 데이터로 변환 처리하는 디지털 오디오 처리부(20)와, 상기 변환된 디지털 오디오 신호를 디지털 증폭하는 디지털 증폭부(21); 상기 디지털 증폭된 디지털 오디오 신호를 가청주파수대역으로 필터링하여 상기 무선 스피커용 송신기(30)로 출력하는 저역통과필터(22)가 포함 구성된다.

그리고, 상기 디지털 증폭부(21a에서, 구형파 펄스의 PWM 오디오 데이터를 증폭하기 위하여, 상기 디지털 증폭부에 인가되는 전원(Vcc)은 DC + 32V로 전원이 공급되며, 상기 PCM 오디오 데이터가 인가되는 경우, 상기 구형파 펄스 PWM 오디오 데이터로 변환되어 상기 디지털 증폭부(21) 및 저역통과필터(22)에 의해 디지털 증폭된 가역주파수 대의 오디오 신호가 상기 (+,-)출력단에 출력되며, 이와 더불어, 각각의 출력부의 +, -단과 GND 간의 전압차가 DC + 15V전위차가 발생된다.

한편, 상기 오디오 리시버(200)에서는, 무선 스피커용 송신기(30)의 AC전원을 인가여부를 제어하는 전원 제어장치를 포함 구성하며, 상기 전원 제어장치는, 상기 가청 주파수 대역으로 필터링한 오디오 신호를 상기 무선 스피커용 송신기(30)로 출력하는 (+,-)출력단에서 소정의 전압레벨이 인가됨에 따라, 상기 전압레벨을 검출하는 검출부(40)와 상기 검출된 전압레벨에 따라, 상기 외부기기로의 전원공급을 제어하는 전원제어부(41)를 포함하여 구성된다.

이에 따라, 상기 전원 제어장치를 구비한 사용자는, 상기 광디스크 플레이어로부터 PCM 오디오 데이터를 수신하는 상태에서, 무선용 스피커(301)를 통해 오디오 재생동작을 선택 지정하게 되는 경우, 상기 검출부(40)에서는, 상기 (+,-)출력단 중 어느 하나의 출력단으로부터 인가되는 + 15V 전압레벨이 검출된 경우, 소정의 전원제어신호를 상기 전원제어부(41)에 출력하게 되며, 상기 전원제어신호가 인가되는 동안 상기 무선 스피커용 송신기(30)에 AC전원이 인가되게 한다.

따라서, 상기 전원 제어장치에서는, 상기 오디오 리시버(200)의 오디오 데이터를 증폭, 필터링하는 상태에서, 상기 (+,-)출력단으로부터 인가되는 전압레벨에 의해 상기 무선 스피커용 송신기(30)에 AC전원을 인가하도록 하여 자동적으로 동작시킬수 있게 된다.

도 4는 본 발명의 다른 실시예에 따른 오디오 리시버에서의 외부기기 전원 제어장치에 대한 구성을 도시한 것으로, 먼저 도 3을 참조로 전술한 바와 같이, 상기 오디오 데이터 재생장치에서는, 상기 광디스크 플레이어에서 PCM 오디오 데이터를 받아 PWM 오디오 데이터로 변환 및 증폭하여, 가청주파수대역의 오디오 신호를 출력하는 오디오 리시버(200)와, 상기 오디오 신호를 무선 데이터로 변환하여 무선 송신하는 무선 스피커용 송신기(30)와, 상기 무선 데이터를 수신하여 소리음으로 스피커(300)를 통해 재생 출력하는 무선 스피커용 수신기(31)를 포함하여 구성된다.

또한, 상기 오디오 리시버(200)는, 상기 광디스크 플레이어에서 출력되는 PCM 오디오 데이터를 PWM 오디오 데이터로 변환 처리하는 디지털 오디오 처리부(20)와, 상기 변환된 디지털 오디오 신호를 디지털 증폭하는 디지털 증폭부(21); 상기 디지털 증폭된 디지털 오디오 신호를 가청주파수대역으로 필터링하여 상기 무선 스피커용 송신기(30)로 출력하는 저역통과필터(22)가 포함 구성된다.

그리고, 상기 PCM 오디오 데이터가 인가되는 경우, 상기 구형파 펄스 PWM 오디오 데이터로 변환되어 상기 디지털 증폭부(21) 및 저역통과필터(22)에 의해 디지털 증폭된 가역주파수 대의 오디오 신호가 상기 (+,-)출력단에 출력된다.

한편, 상기 오디오 리시버(200)에서는, 무선 스피커용 송신기의 AC전원을 인가여부를 제어하는 전원 제어장치를 포함 구성하며, 상기 전원 제어장치는, 상기 (+,-)출력단에서 출력되는 오디오 신호의 레벨을 검출하는 검출부(50)와 상기 검출된 오디오 신호의 레벨에 따라, 상기 외부기기로의 전원공급을 제어하는 전원제어부(51)를 포함하여 구성된다.

이에 따라, 상기 전원 제어장치를 구비한 사용자는, 상기 광디스크 플레이어로부터 PCM 오디오 데이터를 수신하는 상태에서, 무선용 스피커(301)를 통해 오디오 재생동작을 선택 지정하게 되는 경우, 상기 PCM 오디오 데이터는 PWM 오디오 데이터로 변환되는 데, 이때 상기 변환된 PWM 오디오 데이터는, 상기 디지털 증폭부(21)에 의해 디지털 증폭된 후, 상기 저역통과필터(22)를 걸쳐 오디오 신호로 출력하며, 상기 오디오 신호(Audio Signal)는, 가청주파수대의 레벨을 갖는 오디오 신호로, 상기 검출부(50)에 의해 검출된 오디오 신호레벨이 소정의 신호레벨의 이상인 경우, 소정의 전원제어신호로 변환하여 상기 전원제어부(51)에 출력하게 되며, 상기 전원제어신호가 인가되는 동안 상기 무선 스피커용 송신기(30)에 AC전원이 인가되게 한다.

따라서, 상기 전원 제어장치에서는, 상기 오디오 리시버(200)의 디지털 오디오 데이터를 증폭, 필터링하는 상태에서, 상기 (+,-)출력단으로부터 인가되는 오디오 신호(Audio Signal)에 의해 상기 무선 스피커용 송신기(30)에 AC전원을 인가하도록 하여 자동적으로 동작시킬 수 있게 된다.

참고로, 상기 오디오 리시버의 출력단에서 출력되는 오디오 신호나 또는, 전압신호가 인가되지 않는 경우, 상기 검출부(40,50)에서는 상기 검출되는 신호가 없어 소정의 제어신호를 발생하지 못하게 되며, 상기 제어신호가 없는 동안 상기 전원제어부(41,51)는 상기 무선 스피커용 송신기 등의 외부장치에 AC전원이 인가되지 않도록 제어한다.

이상, 전술한 본 발명의 바람직한 실시예는, 예시의 목적을 위해 개시된 것으로, 당업자라면, 이하 첨부된 특허청구범위에 개시된 본 발명의 기술적 사상과 그 기술적 범위 내에서, 또다른 다양한 실시예들을 개량, 변경, 대체 또는 부가 등이 가능할 것이다.

발명의 효과

상기와 같이 구성 및 이루어지는 본명에 따른 오디오 리시버에서의 외부기기 전원 제어장치는, 무선 스피커용 송신기 등과 같은 외부기기를 상기 오디오 리시버와 연결하여 사용하는 경우, 상기 외부기기를 상기 오디오 리시버와 연동하여 전원제어되게 하여 상기 오디오 리시버의 동작시에 상기 외부기기에 전원공급하게함과 아울러, 별도의 수동조작없이 자동으로 전원제어할 수 있도록 하는 매우 유용한 발명인 것이다.

(57) 청구의 범위

청구항 1.

오디오 리시버에서 외부기기로 출력되는 오디오 신호나 또는, 전압레벨을 검출하는 검출수단; 및

상기 검출된 오디오 신호나 또는 전압레벨에 따라, 상기 외부기기로의 전원공급을 제어하는 제어수단을 포함하여 구성되는 것을 특징으로 하는 오디오 리시버에서의 외부기기 전원 제어장치.

청구항 2.

제 1항에 있어서,

상기 외부기기는, 상기 오디오 리시버로부터 출력되는 오디오 신호를 무선 데이터 신호를 변환하여 무선 송신하는 무선 스피커용 송신기인 것을 특징으로 하는 오디오 리시버에서의 외부기기 전원 제어장치.

청구항 3.

제 1항에 있어서,

상기 검출수단은, 상기 오디오 신호의 레벨 또는, 전압레벨이 소정의 기준 레벨에 도달되는지 검출하는 것을 특징으로 하는 오디오 리시버에서의 외부기기 전원 제어장치.

청구항 4.

제 1항 또는 제 3항에 있어서,

상기 제어수단은, 상기 오디오 신호의 레벨이 소정의 기준레벨인 경우이거나 또는, 상기 전압레벨이 소정의 기준레벨인 경우, 상기 외부기기의 전원을 정상 공급하는 것을 특징으로 하는 오디오 리시버에서의 외부기기 전원 제어장치.

도면

도면1

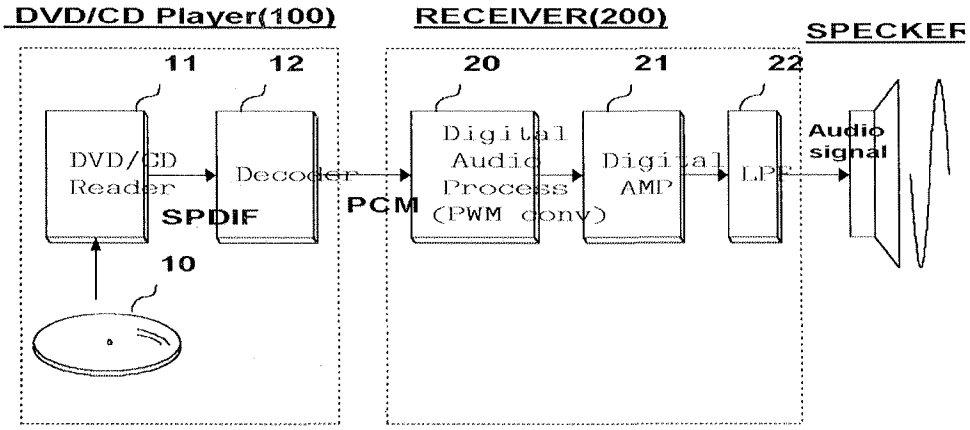

도면2

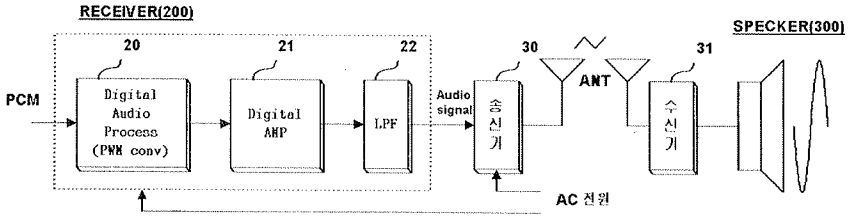
RECEIVER(200)
SPECKER(300)
PCM
20
21
22
30
31
Digital Audio Process (PWM conv)
Digital AMP
LPF
Audio signal
송신기
ANT
수신기
AC 전원

도면3

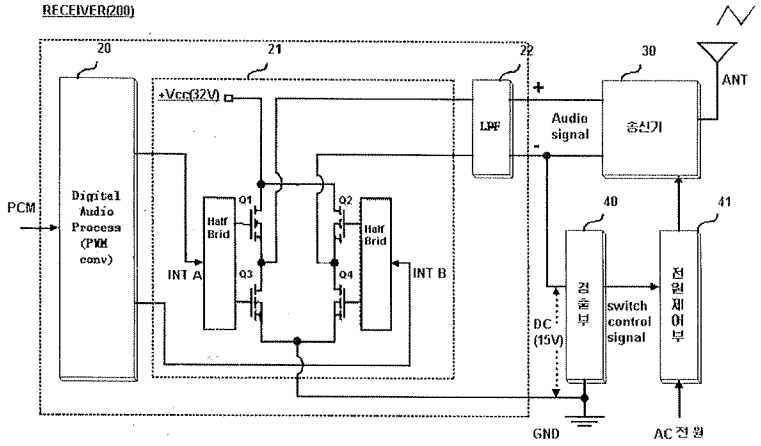
RECEIVER(200)
20
21
22
30
ANT
+Vcc(32V)
LPF
Audio signal
송신기
PCM
Digital Audio Process (PWM conv)
Half Brid
Q1
Q2
Q3
Q4
INT A
INT B
40
41
검출부
switch control signal
전원제어부
DC (15V)
GND
AC 전원

도면4

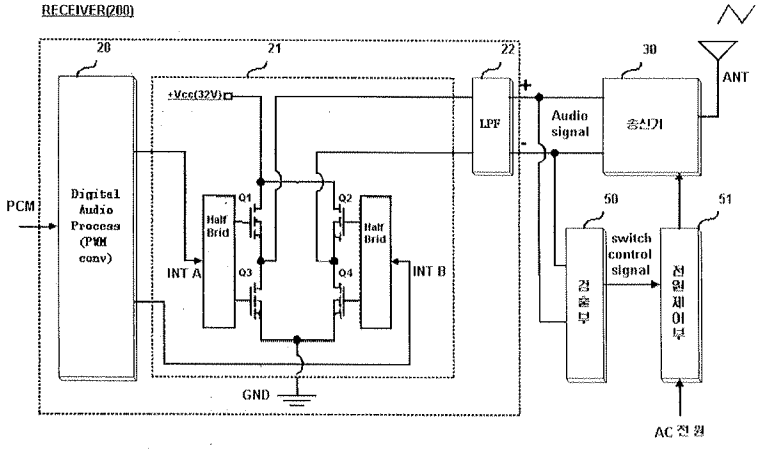
RECEIVER(200)
20
21
22
30
ANT
+Vcc(32V)
LPF
Audio signal
송신기
PCM
Digital Audio Process (PWM conv)
Half Brid
Q1
Q2
Q3
Q4
INT A
INT B
50
51
switch control signal
검출부
전원제어부
GND
AC 전원

Electronic Patent Application Fee Transmittal

Application Number:	
Filing Date:	
Title of Invention:	AUDIO DEVICE, AV SYSTEM HAVING THE AUDIO DEVICE, AND METHOD TO CONTROL THE AUDIO DEVICE
First Named Inventor/Applicant Name:	Jong Taek YOON
Filer:	Patrick J. Stanzione/Amelia Khalaf
Attorney Docket Number:	103-1339

Filed as Large Entity

Utility under 35 USC 111(a) Filing Fees

Description	Fee Code	Quantity	Amount	Sub-Total in USD($)
Basic Filing:				
Utility application filing	1011	1	330	330
Utility Search Fee	1111	1	540	540
Utility Examination Fee	1311	1	220	220
Pages:				
Claims:				
Claims in excess of 20	1202	14	52	728
Independent claims in excess of 3	1201	2	220	440
Miscellaneous-Filing:				

Description	Fee Code	Quantity	Amount	Sub-Total in USD($)
Petition:				
Patent-Appeals-and-Interference:				
Post-Allowance-and-Post-Issuance:				
Extension-of-Time:				
Miscellaneous:				
			Total in USD ($)	**2258**

Electronic Acknowledgement Receipt

EFS ID:	6134928
Application Number:	12565909
International Application Number:	
Confirmation Number:	1417
Title of Invention:	AUDIO DEVICE, AV SYSTEM HAVING THE AUDIO DEVICE, AND METHOD TO CONTROL THE AUDIO DEVICE
First Named Inventor/Applicant Name:	Jong Taek YOON
Customer Number:	38209
Filer:	Patrick J. Stanzione/Amelia Khalaf
Filer Authorized By:	Patrick J. Stanzione
Attorney Docket Number:	103-1339
Receipt Date:	24-SEP-2009
Filing Date:	
Time Stamp:	12:07:49
Application Type:	Utility under 35 USC 111(a)

Payment information:

Submitted with Payment	yes
Payment Type	Credit Card
Payment was successfully received in RAM	$2258
RAM confirmation Number	10991
Deposit Account	502827
Authorized User	STANZIONE,PATRICK

The Director of the USPTO is hereby authorized to charge indicated fees and credit any overpayment as follows:

Charge any Additional Fees required under 37 C.F.R. Section 1.16 (National application filing, search, and examination fees)

Charge any Additional Fees required under 37 C.F.R. Section 1.17 (Patent application and reexamination processing fees)

Charge any Additional Fees required under 37 C.F.R. Section 1.19 (Document supply fees)

Charge any Additional Fees required under 37 C.F.R. Section 1.20 (Post Issuance fees)

Charge any Additional Fees required under 37 C.F.R. Section 1.21 (Miscellaneous fees and charges)

File Listing:

Document Number	Document Description	File Name	File Size(Bytes)/ Message Digest	Multi Part /.zip	Pages (if appl.)
1		Application.pdf	82630 09c5775e5f9ce58c4f8107b1f37b162a2f32f76b	yes	19
	Multipart Description/PDF files in .zip description				
	Document Description		**Start**	**End**	
	Specification		1	14	
	Claims		15	18	
	Abstract		19	19	
Warnings:					
Information:					
2	Drawings-only black and white line drawings	Figs1-3.pdf	56169 3ed2c7f81f0c964e5ab170374eeed8780106508f	no	3
Warnings:					
Information:					
3	Oath or Declaration filed	Declaration.pdf	68478 d1343abfff98d196ce0301f9c6205cbff9d16543	no	2
Warnings:					
Information:					
4	Transmittal of New Application	Utility_Transmittal.pdf	253275 84aba9ba36396c0f4f58dcd55ae7dce744488b84	no	2
Warnings:					
Information:					
5	Information Disclosure Statement (IDS) Filed (SB/08)	US_IDS_Form_SB_08a.pdf	521474 048b9fe0276bb38f902ea435b394ad36f0e08fc7	no	4
Warnings:					
Information:					

A U.S. Patent Number Citation or a U.S. Publication Number Citation is required in the Information Disclosure Statement (IDS) form for autoloading of data into USPTO systems. You may remove the form to add the required data in order to correct the Informational Message if you are citing U.S. References. If you chose not to include U.S. References, the image of the form will be processed and be made available within the Image File Wrapper (IFW) system. However, no data will be extracted from this form. Any additional data such as Foreign Patent Documents or Non Patent Literature will be manually reviewed and keyed into USPTO systems.

6	Foreign Reference	KR2005-96713.pdf	421295 b32431d8fc160c1dcd8f4b0bac54a5f72077a12a	no	8
Warnings:					
Information:					
7	Fee Worksheet (PTO-875)	fee-info.pdf	38074 a7ff9df0b6e72be617cca50f42e6be8cac17184c	no	2
Warnings:					
Information:					
			Total Files Size (in bytes):	1441395	

This Acknowledgement Receipt evidences receipt on the noted date by the USPTO of the indicated documents, characterized by the applicant, and including page counts, where applicable. It serves as evidence of receipt similar to a Post Card, as described in MPEP 503.

<u>New Applications Under 35 U.S.C. 111</u>
If a new application is being filed and the application includes the necessary components for a filing date (see 37 CFR 1.53(b)-(d) and MPEP 506), a Filing Receipt (37 CFR 1.54) will be issued in due course and the date shown on this Acknowledgement Receipt will establish the filing date of the application.

<u>National Stage of an International Application under 35 U.S.C. 371</u>
If a timely submission to enter the national stage of an international application is compliant with the conditions of 35 U.S.C. 371 and other applicable requirements a Form PCT/DO/EO/903 indicating acceptance of the application as a national stage submission under 35 U.S.C. 371 will be issued in addition to the Filing Receipt, in due course.

<u>New International Application Filed with the USPTO as a Receiving Office</u>
If a new international application is being filed and the international application includes the necessary components for an international filing date (see PCT Article 11 and MPEP 1810), a Notification of the International Application Number and of the International Filing Date (Form PCT/RO/105) will be issued in due course, subject to prescriptions concerning national security, and the date shown on this Acknowledgement Receipt will establish the international filing date of the application.

TITLE OF THE INVENTION

AUDIO DEVICE, AV SYSTEM HAVING THE AUDIO DEVICE, AND METHOD TO CONTROL THE AUDIO DEVICE

CROSS-REFERENCE TO RELATED APPLICATIONS

[0001] This application claims the benefit under 35 U.S.C. §119(a) of Korean Patent Application No. 2009-001234, filed on January 7, 2009, in the Korean Intellectual Property Office, the disclosure of which is incorporated herein by reference in its entirety.

BACKGROUND

1. Field of the Invention

[0002] Embodiments of the present general inventive concept relate to an audio device to output an audio signal based on a signal received from an external device, an Audio/Visual (AV) system having the audio device, and a method to control the audio device.

2. Description of the Related Art

[0003] Generally, an audio device deals with sound waves in a sound range audible to the human ear and electrical signals converted from the sound waves. The audio device may be connected to a video device, thus forming an AV system. The AV system simultaneously outputs an audio signal and a video signal from an AV source. One example of an AV system is a home theater system. Rapid proliferation of large video devices and DVD players was a driving force behind the popularity of the home theater system through which a user may enjoy films at the level that may be expected from a movie theater.

[0004] The home theater system includes an AV source device such as a DVD player, a video device, and an audio device. The audio device includes an AV receiver and speakers, and may specifically include a subwoofer speaker, a center speaker, left and right front speakers, and left and right rear speakers. The video device may receive an external broadcast signal and display it. The audio device receives an audio signal from the video device or the AV source device and outputs the audio signal through the multi-channel speakers, which will be described below in detail.

[0005] In the home theater system, the video device and the AV source device each have a microcomputer to control the output of a power control signal and an audio signal. The

microcomputer has separate ports to output the power control signal and the audio signal and the ports transmit the power control signal and the audio signal by different communication schemes. Also, the audio device has a microcomputer to control the output of a power control signal and an audio signal. The microcomputer has separate ports to receive the power control signal and the audio signal and the ports transmit and receive the power control signal and the audio signal by different communication schemes.

[0006] When the video device or the AV source device is turned on, referred to herein as being power-on, with its input and output ports connected, the microcomputer of the video device or the AV source device communicates with that of the audio device via the power control signal ports and, as a result, the audio device is switched to power-on. Upon the switch to the power-on state of the audio device with its audio signal port connected, the microcomputer of the video device or the AV source device communicates with that of the audio device and the audio device outputs an audio signal.

[0007] As described above, the use of separate power control signal ports and audio signal ports in the microcomputer of each device increases the manufacturing cost of the home theater system. Moreover, the installation space of the home theater system looks bad and has a low space efficiency due to multiple cables required to be connected to the ports.

SUMMARY

[0008] Example embodiments of the present general inventive concept provide an audio device, AV system having the audio device, and a method of controlling the audio device with an improved appearance and/or space efficiency.

[0009] Additional features and utilities of the present general inventive concept will be set forth in part in the description which follows and, in part, will be obvious from the description, or may be learned by practice of the general inventive concept.

[0010] The foregoing and/or other features and utilities of the present general inventive concept may be achieved by providing an audio device including a receiver connected to a transmitter of an external device to receive a signal from the external device, and a microcomputer to control power supply and audio output according to whether the signal is received.

[0011] The receiver may include an optical port.

[0012] The signal may be an optical signal including a clock signal and an audio signal.

[0013] The audio device may further include a filter to cancel noise from the signal, a rectifier to rectify the noise-cancelled signal, and a switch to turn on, upon receipt of the rectified signal.

[0014] The microcomputer may control power supply and audio output in response to the switch being on.

[0015] The foregoing and/or other features and utilities of the present general inventive concept may also be achieved by providing an Audio/Visual (AV) system including an external device having a transmitter to output a signal, upon receipt of power, and an audio device having a receiver to receive the signal and a microcomputer to control power supply and audio output according to whether the signal is received.

[0016] Each of the transmitter of the external device and the receiver of the audio device may include an optical port and the transmitter may communicate with the receiver by optical communications.

[0017] The external device may be a video device and/or an AV source device.

[0018] The audio device may further include one or more speakers to output audio signals of one or more channels, and an AV receiver and/or an amplifier.

[0019] The audio device may further include a filter to cancel noise from the signal, a rectifier to rectify the noise-cancelled signal, and a switch to turn on upon receipt of the rectified signal.

[0020] The foregoing and/or other features and utilities of the present general inventive concept may also be achieved by providing a method of controlling an audio device, the method including determining whether a signal is received from an external device, and controlling power supply and audio output of the audio device according to whether the signal is received.

[0021] The signal may be received from the external device in response to power being applied to the external device.

[0022] The signal may be received by optical communications.

[0023] The signal may be an optical signal including a clock signal and an audio signal.

[0024] The method may further include canceling noise from the signal in response to the signal being received, rectifying the noise-cancelled signal, and turning on a switch based on the rectified signal.

[0025] The method may further include supplying power to the audio device and outputting an audio signal of the signal in response to the switch being on.

[0026] The foregoing and/or other features and utilities of the present general inventive concept may also be achieved by providing a device including a receiver to receive a signal from an external source, and a controller to control an on/off state and an output of the device according to the received signal.

[0027] The output of the device may include one or more audio signals.

[0028] The received signal may include an audio component.

[0029] The received signal may be an optical signal.

[0030] The receiver may include a connection port to connect to the external source.

[0031] The receiver may communicate with the external source through a wireless connection.

[0032] The controller may control the device to be turned on in response to receiving the signal.

[0033] The controller may control the device to be turned off in response to termination of the received signal.

[0034] The foregoing and/or other features and utilities of the present general inventive concept may also be achieved by providing a method of controlling a device, the method including controlling an on/off state and an output of the device according to a received signal.

[0035] The output of the device may include one or more audio signals.

[0036] The received signal may include an audio component.

[0037] The received signal may be an optical signal.

[0038] The method may further include receiving the received signal through a wired connection.

[0039] The method may further include receiving the received signal through a wireless connection.

[0040] The controlling the on/off state of the device may include turning the device on in response to receiving the received signal.

[0041] The controlling the on/off state of the device may include turning the device off in response to termination of the received signal.

BRIEF DESCRIPTION OF THE DRAWINGS

[0042] These and/or other features and advantages of the present general inventive concept will become apparent and more readily appreciated from the following description of the embodiments, taken in conjunction with the accompanying drawings of which:

[0043] FIG. 1 is a block diagram illustrating an audio device according to an exemplary embodiment of the present general inventive concept;

[0044] FIG. 2 is a block diagram illustrating an audio device according to another exemplary embodiment of the present general inventive concept; and

[0045] FIG. 3 is a flowchart illustrating a control operation of the audio device of FIG. 2.

DETAILED DESCRIPTION OF THE EMBODIMENTS

[0046] Reference will now be made in detail to various exemplary embodiments of the present general inventive concept, examples of which are illustrated in the accompanying drawings, wherein like reference numerals refer to like elements throughout. The embodiments are described below in order to explain the present general inventive concept by referring to the figures.

[0047] FIG. 1 is a block diagram illustrating an audio device according to an exemplary embodiment of the present general inventive concept. Referring to FIG. 1, the audio device may include an Audio/Visual (AV) receiver 200 and a speaker unit 300. While the audio device is illustrated in FIG. 1 to be the AV receiver 200, the present general inventive concept is not limited thereto. For example, the audio device may be an amplifier, equalizer, etc. The audio device may be connected to an external device 100 via a connection such as an optical port.

[0048] The external device 100 may be a video device that displays a video signal of an external broadcast signal. A Liquid Crystal Display (LCD), an Organic Light Emitting Diode (OLED), or the like may be used as the external device 100. Similarly, the external device 100 may be a device that provides the video signal to such a video device, such as a Digital Video Recorder (DVR), satellite signal receiver, cable box, etc.

[0049] The external device 100 may include a receiver 110, a power supply 120, a first microcomputer 130, and a transmitter 140. The descriptions of these various exemplary embodiments refer to respective controllers of these devices as microcomputers, but the present general inventive concept is not limited thereto. The controller may be a relatively

simple processor or other like unit that provides control over one or more other components of the respective devices.

[0050] The receiver 110 may receive a power-on signal or a power-off signal from a user to turn the external device 100 on or off, and may provide the received signal to the first microcomputer 130. The power supply 120 may receive power required to operate each component from an external power supply and may supply and/or block the operation power to or from each component according to the power-on signal or the power-off signal. Although the power-on and power-off signals are described as coming from a user in this embodiment, the present general inventive concept is not limited thereto. For example, the power-on and power-off signals may be received from another control device, or the first microcomputer may provide the power-on and power-off signals according to a timing circuit, and so on.

[0051] The first microcomputer 130 may transmit a power supply signal or a power blocking signal corresponding to the signal received from the receiver 110 to the power supply 120. Upon receipt of the power-on signal from the receiver 110, the first microcomputer 130 may transmit an output signal to the transmitter 140. The output signal may be an optical signal which may include one or more basic signals, such as, a clock signal, a multi-channel audio signal, and so on.

[0052] The transmitter 140 may transmit the optical signal to the AV receiver 200 of the audio device under the control of the first microcomputer 130. The transmitter 140 may include an optical port connected to an optical cable that is connected to an optical port of a receiver 210 of the AV receiver 200. As the transmitter 140 of the external device 100 may be connected to the receiver 210 of the AV receiver 200 via the optical port and the optical cable, it may transmit the optical signal to the receiver 210 of the AV receiver 200. Alternatively, the receiver 210 of the AV receiver 200 may receive a signal, which may include an audio signal, through a wireless connection with the external device 100.

[0053] The external device 100 may further include a tuner to select a broadcast signal of a user-desired channel among received external broadcast signals, a demodulator to demodulate the selected broadcast signal, a demultiplexer to demultiplex the demodulated broadcast signal into video, audio, and additional information signals, and a video signal processor to process the video signal received from the demultiplexer so that the video signal may be displayed. As these various components of the external device 100 are well known in the art, a detailed explanation thereof has been omitted, and the components are likewise not illustrated in FIG. 1.

[0054] The AV receiver 200 of the audio device may decompress a compressed audio signal received from the external device 100, separate the decompressed audio signal according to channels, amplify the separated signals, and output the amplified signals through multi-channel speakers. The AV receiver 200 may include the receiver 210, a filter 221, a rectifier 222, a switch 223, a second microcomputer 224, a power supply 225, a buffer 231, a Digital Interface Receiver (DIR) 232, and a Digital Signal Processor (DSP) 233.

[0055] The receiver 210 may receive the optical signal from the transmitter 140 of the external device 100 and provide the optical signal to the filter 221 and the buffer 231. As previously described, the receiver 210 may include the optical port connected to the optical cable. That is, the receiver 210 may be connected to the transmitter 140 of the external device 100 via the optical port and the optical cable and receive the optical signal. The optical signal may include one or more basic signals, such as, a clock signal, a multi-channel audio signal, etc.

[0056] The filter 221 may cancel noise such as a surge from the optical signal, and the rectifier 222 may convert the voltage of the noise-cancelled signal to a positive voltage corresponding to the frequency of the noise-cancelled signal. Upon receipt of the rectified voltage, the switch 223 may turn on and provide a power-on signal to the second microcomputer 224. The switch 223 may be a switching device such as a transistor. As a base voltage of the transistor may increase upon receipt of the positive voltage, the transistor may turn on and the switch switches on. If the positive voltage is not applied to the transistor, the base voltage may drop and cause the transistor to turn off. Therefore, in response to the transistor turning off, the switch switches off.

[0057] Upon receipt of the on-signal from the switch 223, the second microcomputer 224 may control the power supply 225 to supply operation power to each component of the audio device. Upon receipt of an off-signal from the switch 223, the second microcomputer 224 may control the power supply 225 to block the operation power from being supplied to each component of the audio device. When such a coupled power control is triggered by the input of the on-signal from the switch 223, the second microcomputer 224 may control output of a digital audio signal received from the transmitter 140 of the external device 100.

[0058] The power supply 225 may be connected to an external power supply and may supply or block the operation power to or from each component under the control of the second microcomputer 224.

[0059] The buffer 231 may temporarily buffer the audio signal received from the external device 100 through the receiver 210. The DIR 232 may determine the sampling frequency of the buffered audio signal and interface a digital audio signal based on the sampling frequency between the buffer 231 and the DSP 233.

[0060] The DSP 233 may digitally process the digital audio signal received from the DIR 232. As a result, the DSP 233 may generate audio signals such as, for example, a center audio signal, a front audio signal, and a rear audio signal to be output through the speaker unit 300 so that the user may hear the audio signals.

[0061] The AV receiver 200 of the audio device may further include a Front Digital-to-Analog Converter (FDAC, not illustrated) to convert the front audio signal received from the DSP 233 to left and right front analog signals and output them to left and right front speakers of the speaker unit 300, and a Rear Digital-to-Analog Converter (RDAC, not shown) to convert the rear audio signal received from the DSP 233 to left and right rear analog signals and output them to left and right rear speakers of the speaker unit 300.

[0062] The AV receiver 200 may further include an Analog-to-Digital Converter (ADC, not illustrated) to convert an analog audio signal to a digital audio signal in a case in which an analog audio signal is received from the external device 100 through the receiver 210.

[0063] The speaker unit 300 of the audio device may include speakers that output audio signals of a plurality of channels. For example, in the case in which the speaker unit 300 includes a set of 5.1-channel speakers, the speaker unit 300 may include a center speaker disposed at a front center position of the user's listening area, front speakers disposed at both sides of the front of the listening area, rear speakers disposed at both sides behind the user, and a subwoofer speaker. The center speaker may output, for example, clean dialogues corresponding to a film being watched by the user. The center speaker may also output, for example, clean dialogues between the front speakers. The left and right front speakers may output, for example, musical scores, dialogues, a variety of sound effects, etc., thus giving a feeling of a natural and expansive stage set. The left and right rear speakers may enhance the natural and expansive feeling by outputting, for example, sound effects, surrounding sound, background sound, etc., in addition to the sound from the front speakers. The subwoofer speaker may output lower frequency sound to thereby enhance a reality and liveliness of the output sounds in cooperation with the other speakers of the speaker unit 300.

[0064] As another example, the speaker unit 300 may have a set of 7.1-channel speakers

that include left and right side speakers in addition to the 5.1-channel speakers previously described.

[0065] FIG. 2 is a block diagram illustrating an audio device according to another exemplary embodiment of the present general inventive concept. Referring to FIG. 2, the audio device may include the AV receiver 200 and the speaker unit 300. As discussed in regard to the audio device illustrated in FIG. 1, the audio device may also be an amplifier, equalizer, etc. The audio device may be connected to a plurality of external devices, such as first and second external devices 100 and 400 via connections, such as optical ports.

[0066] The first external device 100 illustrated in FIG. 2 is the same as the external device 100 illustrated in FIG. 1, and therefore the components are denoted by like reference numerals. However, since the second external device 400 has many of the same components as the first external device, the previously described receiver 110, power supply 120, and transmitter 140 are referred to in FIG. 2 and the corresponding descriptions as a first receiver 110, first power supply 120, and first transmitter 140.

[0067] Likewise, the AV receiver 200 illustrated in FIG. 2 includes substantially the same components as those illustrated in FIG. 1, and therefore these components are also denoted by like reference numerals. However, the receiver 210 illustrated in FIG. 1 has been replaced in FIG. 2 with a first receiver 210a and a second receiver 210b.

[0068] The first transmitter 140 of the first external device 100 may include an optical port connected to an optical cable. The first transmitter 140 may be connected to the first receiver 210a of the audio device via the optical port and the optical cable and may transmit the optical signal to the first receiver 210a.

[0069] The second external device 400 may be an AV source device such as a Personal Video Recorder (PVR), a DVD player, a DiVX-like multimedia player, a Set-Top Box (STB), etc., and may employ a medium that stores digital audio and video streams. However, the present general inventive concept is not limited thereto, as the second external device 400 may also be any of the devices previously discussed as possible examples of the first external device 100. In a case in which the first external device 100 is a device which displays video content, the second external device 400 may transmit a compressed video signal to the first external device 100 and a compressed audio signal to the AV receiver 200.

[0070] The second external device 400 may include a second receiver 410, a second power supply 420, a third microcomputer 430, and a second transmitter 440. The second external

device 400 may further includes a communication module (not illustrated) to transmit a video signal to the first external device 100.

[0071] The second receiver 410 may receive a power-on signal or a power-off signal from the user to turn the second external device 400 on/off, and may provide the received signal to the third microcomputer 430. The second power supply 420 may receive power required to operate each component from an external power supply and may supply or block the operation power to or from each component according to the power-on signal or the power-off signal.

[0072] The third microcomputer 430 may transmit a power supply signal or a power blocking signal corresponding to the signal received from the second receiver 410 to the second power supply 420. Upon receipt of the power-on signal from the second receiver 410, the third microcomputer 430 may transmit an output signal to the second transmitter 440. The output signal may be an optical signal, and may include one or more basic signals such as a clock signal, a multi-channel audio signal, etc.

[0073] Under control of the third microcomputer 430, the second transmitter 440 may transmit the optical signal to the AV receiver 200 of the audio device. The second transmitter 440 may include an optical port connected to an optical cable. The second transmitter 440 of the second external device 400 may be connected to the second receiver 210b of the audio device via the optical port and the optical cable and may therefore transmit the optical signal to the second receiver 210b.

[0074] The AV receiver 200 of the audio device may decompress a compressed audio signal received from the first or second external device 100 or 400, separate the decompressed audio signal according to channels, amplify the separated signals, and output the amplified signals through the speaker unit 300 that may include multi-channel speakers. The AV receiver 200 may include the first and second receivers 210a and 210b, the filter 221, the rectifier 222, the switch 223, the second microcomputer 224, the power supply 225, the buffer 231, the DIR 232, and the DSP 233.

[0075] The first receiver 210a may receive the optical signal from the first transmitter 140 of the first external device 100 and provide the optical signal to the filter 221 and the buffer 231. The first receiver 210a may include an optical port connected to an optical cable. That is, the first receiver 210a of the audio device may be connected to the first transmitter 140 of the first external device 100 via the optical port and the optical cable and receive the optical signal. The optical signal may include a basic signal, such as a clock signal, a multi-channel audio signal,

etc.

[0076] The second receiver 210b may receive the optical signal from the second transmitter 440 of the second external device 400 and provide the optical signal to the filter 221 and the buffer 231. The second receiver 210b may include an optical port connected to an optical cable. That is, the second receiver 210b of the audio device may be connected to the second transmitter 440 of the second external device 400 via the optical port and the optical cable and may therefore receive the optical signal from the second external device 400. The optical signal may include a basic signal, such as a clock signal, a multi-channel audio signal, etc.

[0077] The filter 221 may cancel noise from the optical signal received from the first or second receiver 210a or 210b and the buffer 231 may temporarily buffer the optical signal received from the first or second receiver 210a or 210b.

[0078] The rectifier 222, the switch 223, the second microcomputer 224, the power supply 225, the DIR 232, and the DSP 233 may be identical to their counterparts illustrated in FIG. 1 and thus their description is not provided herein.

[0079] The AV receiver 200 may further include an FDAC (not illustrated) to convert a front audio signal received from the DSP 233 to left and right front analog signals and output them to left and right front speakers of the speaker unit 300, and an RDAC (not illustrated) to convert a rear audio signal received from the DSP 233 to left and right rear analog signals and output them to left and right rear speakers of the speaker unit 300. The AV receiver 200 may further include an ADC (not illustrated) to convert an analog audio signal to a digital audio signal in case in which an analog audio signal is received from the external device 100 through the receivers 210a or 210b.

[0080] The speaker unit 300 of the audio device may include speakers that output audio signals of a plurality of channels. As previously discussed, in the case in which the speaker unit 300 includes a set of 5.1-channel speakers, the speaker unit 300 may include a center speaker disposed at a front center position of the user's listening area (typically at the first external device 100), front speakers disposed at both sides of the front of the listening area, rear speakers disposed at both sides behind the user, and a subwoofer speaker. The center speaker may output, for example, clean dialogues corresponding to a film being watched by the user. The center speaker may also output, for example, clean dialogues between the front speakers. The left and right front speakers may output, for example, musical scores, dialogues, a variety of sound effects, etc., thus giving a feeling of a natural and expansive stage set. The

left and right rear speakers may enhance the natural and expansive feeling by outputting, for example, sound effects, surrounding sound, background sound, etc., in addition to the sound from the front speakers. The sub-woofer speaker may output lower frequency sound to thereby enhance a reality and liveliness of the output sounds in cooperation with the other speakers of the speaker unit 300.

[0081] As also previously discussed, the speaker unit 300 may have a set of 7.1-channel speakers that include left and right side speakers in addition to the 5.1-channel speakers described above.

[0082] In this manner, provisioning of a digital audio signal and sensing of power of an external device are simultaneously carried out through optical ports and power supply to an audio device is controlled in a coupled manner. Therefore, the convenience experienced by the user may be increased.

[0083] Since coupled power control may be performed by adding a filter, a rectifier, and a switch to an optical port of an audio device without using a separate port and microcomputer for the coupled power control, the manufacturing cost of the audio device may be decreased and the efficiency of the port installation space of the audio device may be increased.

[0084] FIG. 3 is a flowchart illustrating a control operation of the audio device of FIG. 2. The control operation will be described with reference to FIG. 2.

[0085] As an example, upon receipt of power, the first external device 100 that may be a video device may display a video signal, such as a received external broadcast signal, on a screen, and may output an optical signal to the audio device. As another example of control operations of the audio device of FIG. 2, upon receipt of power, the second external device 400 that may be an AV source device such as a PVR, a DVD player, an STB, etc., may transmit a video signal read from a storage medium (not illustrated) to the first external device 100 and may output an optical signal to the audio device.

[0086] The first and second external devices 100 and 400 may be connected to the audio device via optical ports and optical cables. Hence, signals output from the first and second external devices 100 and 400 may be optical signals transmitted through the optical ports and the optical cables. Each of the optical signals may include a basic signal such as a clock signal, an audio signal, etc.

[0087] In operation 510 the audio device may receive the optical signal from the first or

second external device 100 or 400.

[0088] Upon receipt of the optical signal from the first or second external device 100 or 400, the audio device may cancel noise from the optical signal in operation 520, rectify the noise-cancelled signal by converting its voltage to a positive voltage according to its frequency in operation 530, and turn on the switch 233 according to the rectified voltage in operation 540. The switch 223 may be a switching device such as a transistor. The application of the positive voltage may increase the base voltage of the transistor. As the transistor turns on as a result of the application of the positive voltage, the switch is turned on.

[0089] In response to the switch 223 being on, the AV receiver 200 of the audio device may supply operation power to each component of the audio device, thereby coupling power control with the external device in operation 550. In operation 560 the AV receiver 200 may output the digital audio signal received from the first or second external device 100 or 400.

[0090] In more detail, when power is supplied to each component of the audio device, the digital audio signal of the optical signal may be temporarily buffered in the buffer 231 and the buffered digital audio signal may be provided to the DSP 233 through the DIR 232. The digital audio signal may be digitally processed to be audible to the user, thus generating audio signals which may include a center audio signal, a front audio signal, and a rear audio signal. The front audio signal may be converted to left and right front analog signals and output to left and right front speakers. The rear audio signal may be converted to left and right rear analog signals and output to left and right rear speakers. The center audio signal may be converted to a center analog signal and output to a center speaker.

[0091] Upon being powered on, the audio device may continue monitoring reception of the optical signal from the first or second external device 100 or 400.

[0092] If the operation power is blocked from the first or second external device 100 or 400 and thus an optical signal is not received from the first or second external device 100 or 400, a positive voltage corresponding to the frequency of the optical signal is not generated. Consequently, the positive voltage is not applied to the base of the transistor and the base voltage of the transistor drops. As the transistor turns off, the switch 233 turns off.

[0093] In other words, the AV receiver 200 of the audio device may block the operation power from each component of the audio device, thus coupling power control with the external device.

[0094] The present general inventive concept can decrease the number of cables connecting

the audio device and the external device, which allows the installation space of the audio device to look better and increases the efficiency of the installation space.

[0095] In addition, ports and cables connecting the audio device and the external device are decreased in number. Therefore, the manufacturing costs of the audio device and the external device are reduced.

[0096] Although various example embodiments of the present general inventive concept have been illustrated and described, it will be appreciated by those skilled in the art that changes may be made in these example embodiments without departing from the principles and spirit of the general inventive concept, the scope of which is defined in the appended claims and their equivalents.

CLAIMS

What is claimed is:

1. An audio device comprising:

a receiver connected to a transmitter of an external device to receive a signal from the external device; and

a microcomputer to control power supply and audio output according to whether the signal is received.

2. The audio device according to claim 1, wherein the receiver includes an optical port.

3. The audio device according to claim 1, wherein the signal is an optical signal including a clock signal and an audio signal.

4. The audio device according to claim 1, further comprising a filter to cancel noise from the signal.

5. The audio device according to claim 4, further comprising a rectifier to rectify the noise-cancelled signal.

6. The audio device according to claim 5, further comprising a switch to turn on upon receipt of the rectified signal.

7. The audio device according to claim 6, wherein the microcomputer controls power supply and audio output in response to the switch being on.

8. An Audio/Visual (AV) system comprising:

an external device having a transmitter to output a signal upon receipt of power; and

an audio device having a receiver to receive the signal and a microcomputer to control power supply and audio output according to whether the signal is received.

9. The AV system according to claim 8, wherein each of the transmitter of the

external device and the receiver of the audio device includes an optical port and the transmitter communicates with the receiver by optical communications.

10. The AV system according to claim 8, wherein the external device is a video device and/or an AV source device.

11. The AV system according to claim 8, wherein the audio device further includes one or more speakers to output audio signals of one or more channels, and an AV receiver and/or an amplifier.

12. The AV system according to claim 11, wherein the audio device further includes a filter to cancel noise from the signal, a rectifier to rectify the noise-cancelled signal, and a switch to turn on upon receipt of the rectified signal.

13. A method of controlling an audio device, the method comprising:
determining whether a signal is received from an external device; and
controlling power supply and audio output of the audio device according to whether the signal is received.

14. The method according to claim 13, wherein the signal is received from the external device in response to power being applied to the external device.

15. The method according to claim 14, wherein the signal is received by optical communications.

16. The method according to claim 15, wherein the signal is an optical signal including a clock signal and an audio signal.

17. The method according to claim 13, further comprising:
canceling noise from the signal in response to the signal being received;
rectifying the noise-cancelled signal; and
turning on a switch based on the rectified signal.

18. The method according to claim 17, further comprising:

supplying power to the audio device and outputting an audio signal of the signal in response to the switch being on.

19. A device comprising:

a receiver to receive a signal from an external source; and

a controller to control an on/off state and an output of the device according to the received signal.

20. The device of claim 19, wherein the output of the device includes one or more audio signals.

21. The device of claim 19, wherein the received signal includes an audio component.

22. The device of claim 19, wherein the received signal is an optical signal.

23. The device of claim 19, wherein the receiver includes a connection port to connect to the external source.

24. The device of claim 23, wherein the receiver communicates with the external source through a wireless connection.

25. The device of claim 19, wherein the controller controls the device to be turned on in response to receiving the signal.

26. The device of claim 19, wherein the controller controls the device to be turned off in response to termination of the received signal.

27. A method of controlling a device, the method comprising:

controlling an on/off state and an output of the device according to a received signal.

28. The method of claim 27, wherein the output of the device includes one or more audio signals.

29. The method of claim 27, wherein the received signal includes an audio component.

30. The method of claim 27, wherein the received signal is an optical signal.

31. The method of claim 27, further comprising:

receiving the received signal through a wired connection.

32. The method of claim 27, further comprising:

receiving the received signal through a wireless connection.

33. The method of claim 27, wherein the controlling the on/off state of the device comprises:

turning the device on in response to receiving the received signal

34. The method of claim 27, wherein the controlling the on/off state of the device comprises:

turning the device off in response to termination of the received signal.

ABSTRACT OF THE DISCLOSURE

An audio device, an Audio/Visual (A/V) system having the audio device, and a method to control the audio device, the audio device including a receiver connected to a transmitter of an external device to receive a signal from the external device, and a microcomputer to control power supply and audio output according to whether the signal is received.

FIG. 1

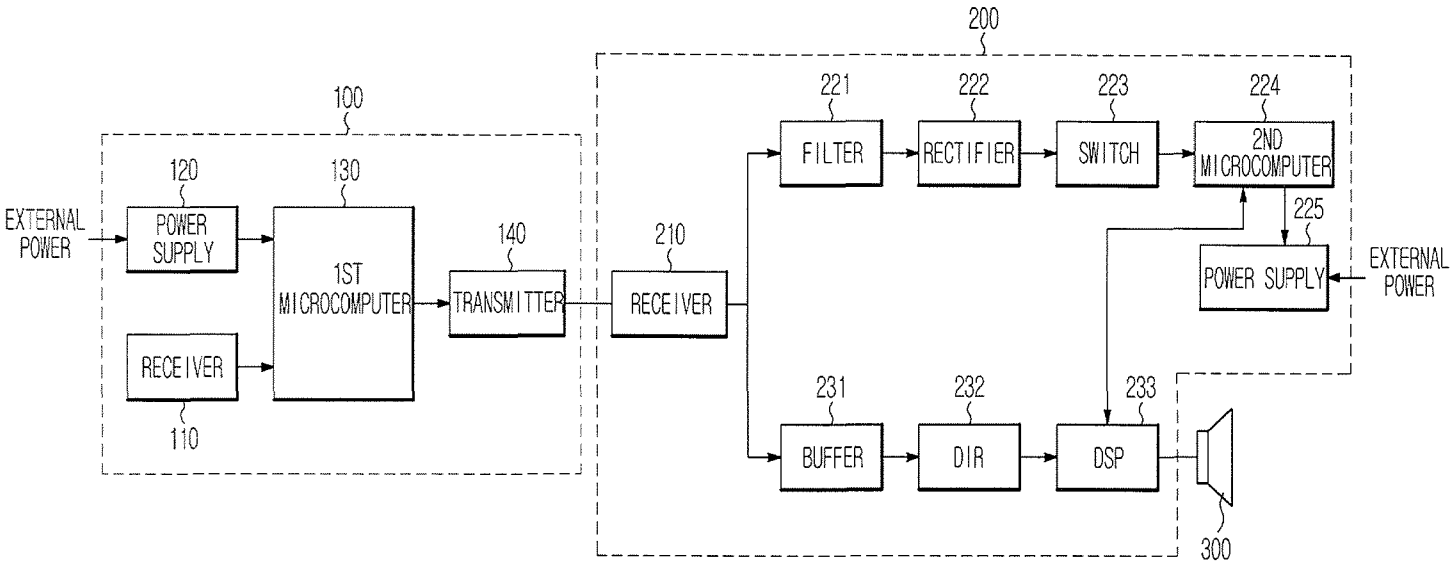
200
100
221
222
223
224
120
130
FILTER
RECTIFIER
SWITCH
2ND MICROCOMPUTER
EXTERNAL POWER
POWER SUPPLY
1ST MICROCOMPUTER
140
210
225
TRANSMITTER
RECEIVER
POWER SUPPLY
EXTERNAL POWER
RECEIVER
231
232
233
110
BUFFER
DIR
DSP
300

FIG. 2

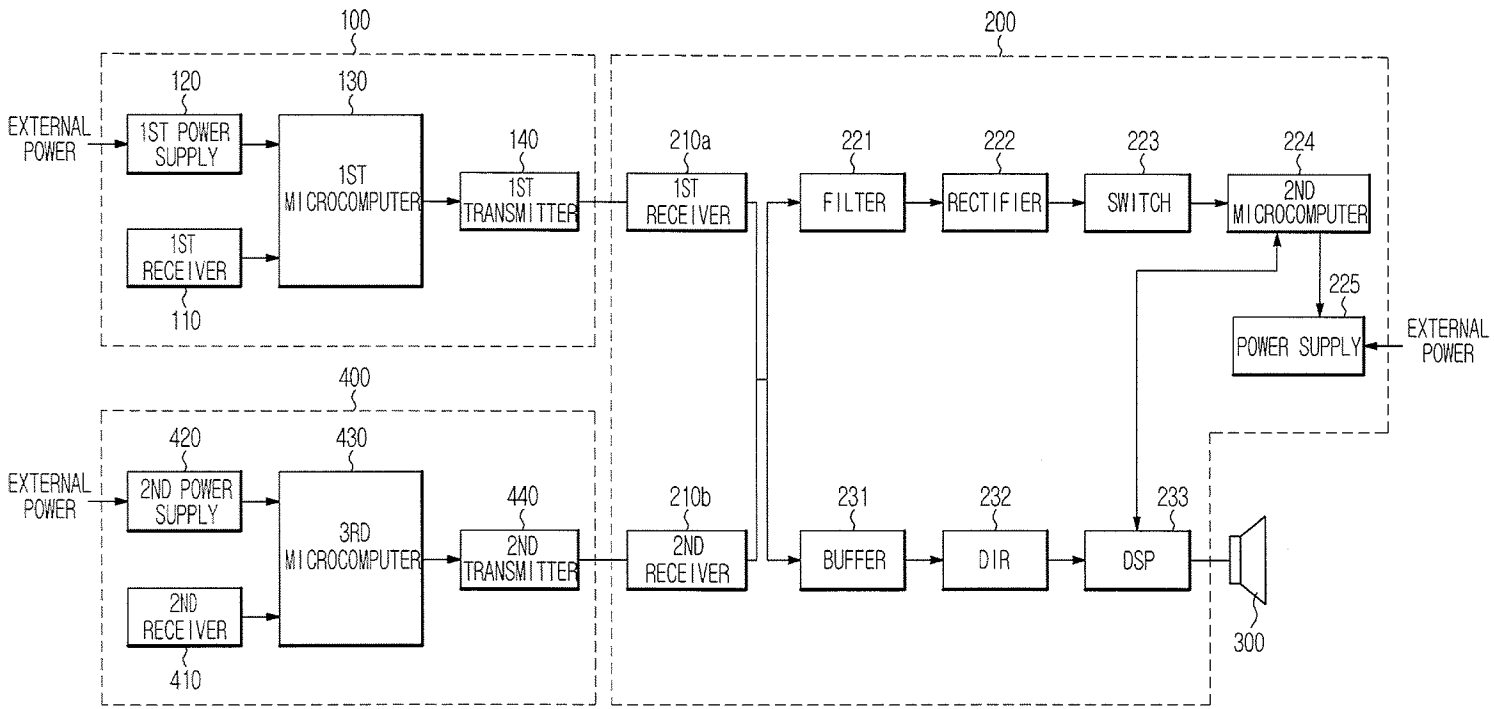
100
200
120
130
EXTERNAL POWER
1ST POWER SUPPLY
1ST MICROCOMPUTER
140
1ST TRANSMITTER
210a
1ST RECEIVER
221
FILTER
222
RECTIFIER
223
SWITCH
224
2ND MICROCOMPUTER
1ST RECEIVER
110
225
POWER SUPPLY
EXTERNAL POWER
400
420
430
EXTERNAL POWER
2ND POWER SUPPLY
3RD MICROCOMPUTER
440
2ND TRANSMITTER
210b
2ND RECEIVER
231
BUFFER
232
DIR
233
DSP
2ND RECEIVER
410
300

FIG. 3

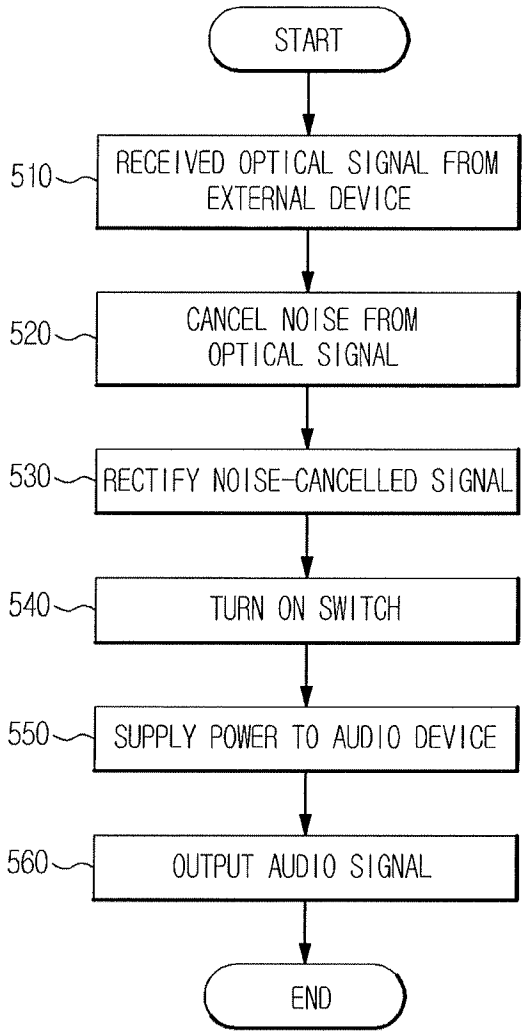
START
510
RECEIVED OPTICAL SIGNAL FROM EXTERNAL DEVICE
520
CANCEL NOISE FROM OPTICAL SIGNAL
530
RECTIFY NOISE-CANCELLED SIGNAL
540
TURN ON SWITCH
550
SUPPLY POWER TO AUDIO DEVICE
560
OUTPUT AUDIO SIGNAL
END

Form (S&K 12/08) UNITED STATES Docket No.: 103-1339

COMBINED DECLARATION/POWER OF ATTORNEY FOR UTILITY/DESIGN PATENT APPLICATION

As a below named Inventor, I hereby declare that:
My residence, post office address and citizenship are as stated below next to my name.
I believe that I am the original, first and sole Inventor (if only one name is listed below) or an original, first and joint Inventor (If plural names are listed below) of the subject matter which is clamed and for which a patent is sought on the invention entitled:

AUDIO DEVICE, AV SYSTEM HAVING THE AUDIO DEVICE, AND METHOD TO CONTROL THE AUDIO DEVICE

The specification of which is attached hereto, unless the following box is checked:
☐ was filed on _____ as United States Application Number or PCT Application Number_____
and was amended on (if applicable).
I hereby state that I have reviewed and understand the contents of the above-identified specification, including the claims, as amended by any amendment referred to above.
I acknowledge the duty to disclose information which is material to patentability as defined in 37 C.F.R. § 1.56.

Authorization To Permit Access To Application by Participating Offices

☒ If checked, the undersigned hereby grants the USPTO authority to provide the European Patent Office (EPO), the Japan Patent Office (JPO), the Korean Intellectual Property Office (KIPO), and any other intellectual property offices in which a foreign application claiming priority to the above-identified application is filed access to the above-identified patent application. See 37 CFR 1.14(c) and (h). This box should not be checked if the applicant does not wish the EPO, JPO, KIPO, or other intellectual property office in which a foreign application claiming priority to the above-identified application is filed to have access to the application.

In accordance with 37 CFR 1.14(h)(3), access will be provided to a copy of the application-as-filed with respect to: 1) the above-identified application, 2) any foreign application to which the above-identified application claims priority under 35 USC 119(a)-(d) if a copy of the foreign application that satisfies the certified copy requirement of 37 CFR 1.55 has been filed in the above-identified US application, and 3) any U.S. application from which benefit is sought in the above-identified application.

In accordance with 37 CFR 1.14(c), access may be provided to information concerning the date of filing the Authorization to Permit Access to Application by Participating Offices.

I hereby claim foreign priority benefit(s) under 35 U.S.C. § 119(a)-(c) of any foreign application(s) for patent or inventor's certificate listed below and have also identified below any foreign application(s) for patent or inventor's certificate having a filing date before the application on which priority is claimed.

Prior Foreign Application(s)			Priority NOT Claimed
2009-1234	Republic of Korea	7/January 2009	☐
(Number)	(Country)	Day/Month/Year Filed	

I hereby claim the benefit under 35 U.S.C. § 120 or § 110(c) of any United States application(s), or § 365(c) of any PCT International application designating the United States listed below and, insofar as the subject matter of each of the claims of this application is not disclosed in the prior United States or PCT International application(s) in the manner provided by the first paragraph of 35 U.S.C. § 112, I acknowledge the duty to disclose information which is material to patentability as defined in 37 C.F.R. § 1.56 which became available between the filing date of the prior application and the national or PCT International filing date of this application.

(Application Serial No.)	(Filing Date)	(Status-patented, pending, abandoned)

I hereby appoint the attorneys and agents of Stanzione & Kim, LLP under USPTO Customer No. 38,209 to prosecute the application and to transact all business in the Patent and Trademark Office connected therewith.
I hereby declare that all statements made herein of my own knowledge are true and that all statements made on information and belief are believed to be true; and further that these statements were made with the knowledge that willful false statements and the like so made are punishable by fine or imprisonment, or both, under Section 1001 of

Title 18 of the United States Code and that such willful false statements may jeopardize the validity of the application or any patent issues thereon.

COMBINED DECLARATION/POWER OF ATTORNEY FOR UTILITY/DESIGN PATENT APPLICATION

Full name of sole or first inventor: Jong Taek YOON

Inventor's Signature _____ Date: 9. 28. 2009

Residence: Suwon-si, Korea Citizenship: Republic of Korea

Mailing address: #119-1503, Hyundai-hometown, Maetan-1-dong, Yeongtong-gu, Suwon-si, Gyeonggi-do, Korea

Full name of second inventor: Hag Do KIM

Inventor's Signature: _____ Date: 9. 28. 2009

Residence: Suwon-si, Korea Citizenship: Republic of Korea

Mailing address: #117-104, Hyundai-hometown, Maetan-1-dong, Yeongtong-gu, Suwon-si, Gyeonggi-do, Korea

Filing Date: 09/24/09

Approved for use through 7/31/2006. OMB 0651-0032
U.S. Patent and Trademark Office; U.S. DEPARTMENT OF COMMERCE

Under the Paperwork Reduction Act of 1995, no persons are required to respond to a collection of information unless it displays a valid OMB control number.

PATENT APPLICATION FEE DETERMINATION RECORD

Substitute for Form PTO-875

Application or Docket Number: 12/565,909

APPLICATION AS FILED – PART I

FOR	(Column 1) NUMBER FILED	(Column 2) NUMBER EXTRA	SMALL ENTITY RATE ($)	SMALL ENTITY FEE ($)	OR	OTHER THAN SMALL ENTITY RATE ($)	OTHER THAN SMALL ENTITY FEE ($)
BASIC FEE (37 CFR 1.16(a), (b), or (c))	N/A	N/A	N/A			N/A	330
SEARCH FEE (37 CFR 1.16(k), (i), or (m))	N/A	N/A	N/A			N/A	540
EXAMINATION FEE (37 CFR 1.16(o), (p), or (q))	N/A	N/A	N/A			N/A	220
TOTAL CLAIMS (37 CFR 1.16(i))	34 minus 20 =	14	x$26		OR	x$52	728
INDEPENDENT CLAIMS (37 CFR 1.16(h))	5 minus 3 =	* 2	x$110			x$220	440
APPLICATION SIZE FEE (37 CFR 1.16(s))	If the specification and drawings exceed 100 sheets of paper, the application size fee due is $270 ($135 for small entity) for each additional 50 sheets or fraction thereof. See 35 U.S.C. 41(a)(1)(G) and 37 CFR						
MULTIPLE DEPENDENT CLAIM PRESENT (37 CFR 1.16(j))			195			390	
			TOTAL			TOTAL	2258

* If the difference in column 1 is less than zero, enter "0" in column 2.

APPLICATION AS AMENDED – PART II

		(Column 1) CLAIMS REMAINING AFTER AMENDMENT		(Column 2) HIGHEST NUMBER PREVIOUSLY PAID FOR	(Column 3) PRESENT EXTRA	SMALL ENTITY RATE ($)	SMALL ENTITY ADDI-TIONAL FEE ($)	OR	OTHER THAN SMALL ENTITY RATE ($)	OTHER THAN SMALL ENTITY ADDI-TIONAL FEE ($)
AMENDMENT A	Total (37 CFR 1.16(i))	*	Minus	**	=	x =		OR	x =	
AMENDMENT A	Independent (37 CFR 1.16(h))	*	Minus	***	=	x =		OR	x =	
AMENDMENT A	Application Size Fee (37 CFR 1.16(s))									
AMENDMENT A	FIRST PRESENTATION OF MULTIPLE DEPENDENT CLAIM (37 CFR 1.16(j))					N/A		OR	N/A	
						TOTAL ADD'T FEE		OR	TOTAL ADD'T FEE	

		(Column 1) CLAIMS REMAINING AFTER AMENDMENT		(Column 2) HIGHEST NUMBER PREVIOUSLY PAID FOR	(Column 3) PRESENT EXTRA	RATE ($)	ADDI-TIONAL FEE ($)	OR	RATE ($)	ADDI-TIONAL FEE ($)
AMENDMENT B	Total (37 CFR 1.16(i))	*	Minus	**	=	x =		OR	x =	
AMENDMENT B	Independent (37 CFR 1.16(h))	*	Minus	***	=	x =		OR	x =	
AMENDMENT B	Application Size Fee (37 CFR 1.16(s))									
AMENDMENT B	FIRST PRESENTATION OF MULTIPLE DEPENDENT CLAIM (37 CFR 1.16(j))					N/A		OR	N/A	
						TOTAL ADD'T FEE		OR	TOTAL ADD'T FEE	

* If the entry in column 1 is less than the entry in column 2, write "0" in column 3.

** If the "Highest Number Previously Paid For" IN THIS SPACE is less than 20, enter "20".

*** If the "Highest Number Previously Paid For" IN THIS SPACE is less than 3, enter "3".
The "Highest Number Previously Paid For" (Total or Independent) is the highest number found in the appropriate box in column 1.

This collection of information is required by 37 CFR 1.16. The information is required to obtain or retain a benefit by the public which is to file (and by the USPTO to process) an application. Confidentiality is governed by 35 U.S.C. 122 and 37 CFR 1.14. This collection is estimated to take 12 minutes to complete, including gathering, preparing, and submitting the completed application form to the USPTO. Time will vary depending upon the individual case. Any comments on the amount of time you require to complete this form and/or suggestions for reducing this burden, should be sent to the Chief Information Officer, U.S. Patent and Trademark Office, U.S. Department of Commerce, P.O. Box 1450, Alexandria, VA 22313-1450. DO NOT SEND FEES OR COMPLETED FORMS TO THIS ADDRESS. **SEND TO: Commissioner for Patents, P.O. Box 1450, Alexandria, VA 22313-1450.**

If you need assistance in completing the form, call 1-800-PTO-9199 and select option 2.