US 20010041602A1

(19) United States

(12) Patent Application Publication

BERGER et al.

(10) Pub. No.: US 2001/0041602 A1

(43) Pub. Date: Nov. 15, 2001

(54) INTERGRATED HEARING AID FOR TELECOMMUNICATIONS DEVICES

(76) Inventors: **H. STEPHEN BERGER**, GEOGETOWN, TX (US); **DILLARD GILMORE**, AUSTIN, TX (US); **JOSEPH D. FAZIO**, RINGOES, NJ (US); **SUNIL CHOJAR**, LEBANON, NJ (US)

Correspondence Address:
SIEMENS CORP
INTELLECTUAL PROPERTY DEPARTMENT
186 WOOD AVE SOUTH
ISELIN, NJ 08830

(*) Notice: This is a publication of a continued prosecution application (CPA) filed under 37 CFR 1.53(d).

(21) Appl. No.: **08/850,537**

(22) Filed: **May 2, 1997**

Publication Classification

(51) **Int. Cl.**[7] **H04B 1/38**; H04R 5/00; H04B 1/10; H04R 25/00; H04B 15/00; H04M 1/00

(52) **U.S. Cl.** **455/570**; 455/63; 381/23.1

(57) **ABSTRACT**

A system integrates a hearing aid with devices such as wireless telephones, advantageously avoiding radio frequency (RF) interference. In one embodiment, a processor transforms an electrical signal to compensate for a hearing impairment. The function used for signal transformation can be accessed via a processor memory enhancement such as a smart card. A digital-to-analog converter (DAC) converts the transformed signal to an analog signal, which then goes to an amplifier and speaker. In other embodiments, an analog amplifier transforms the electrical signal.

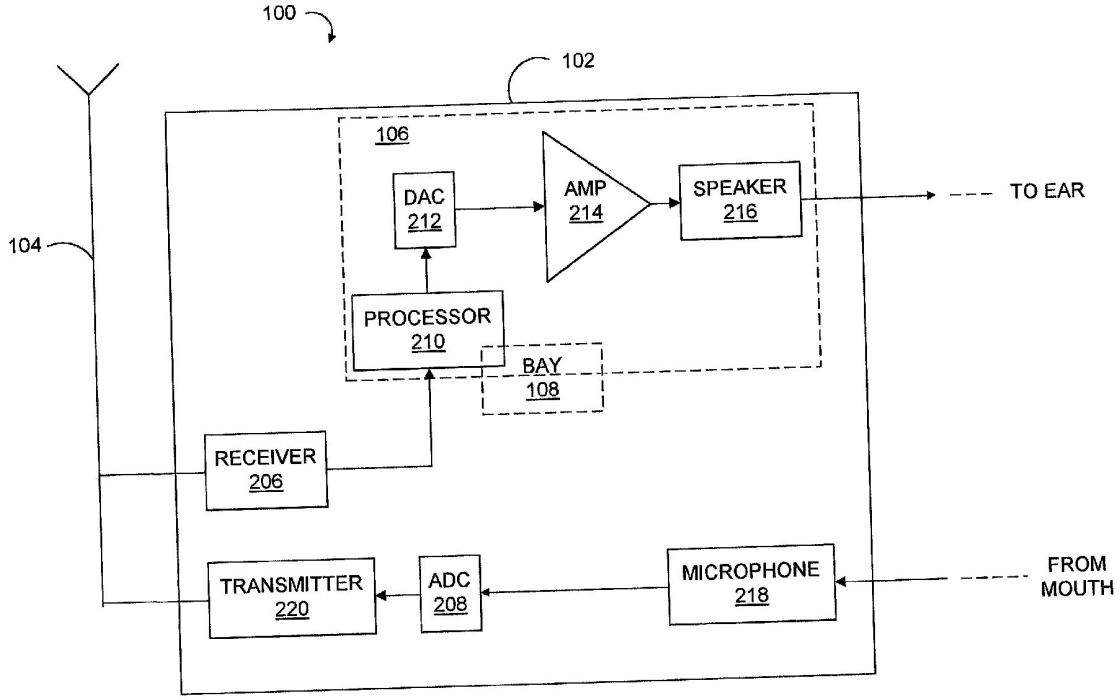

Bose Exhibit 1011
Bose v. IngenioSpec

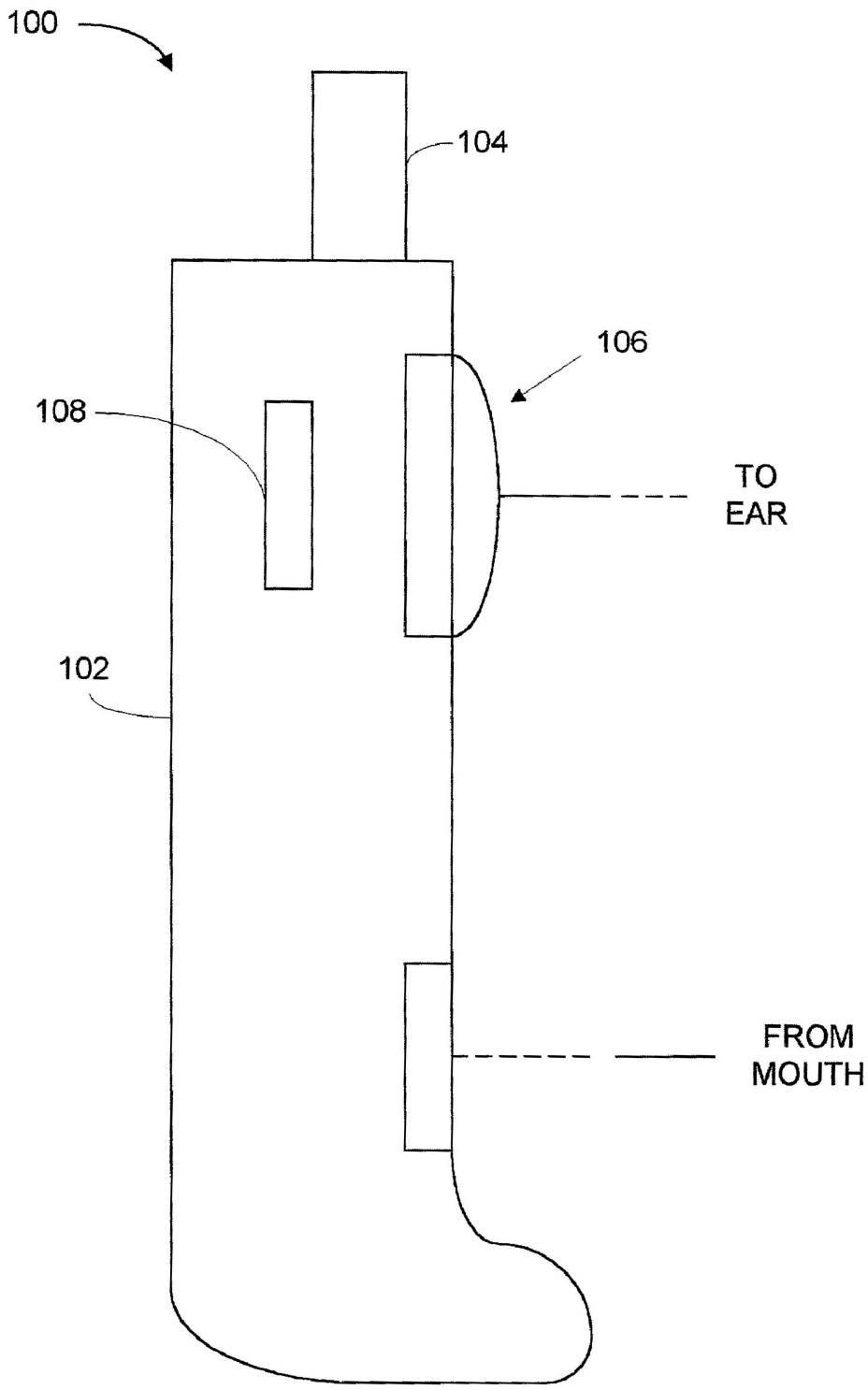

FIGURE 1

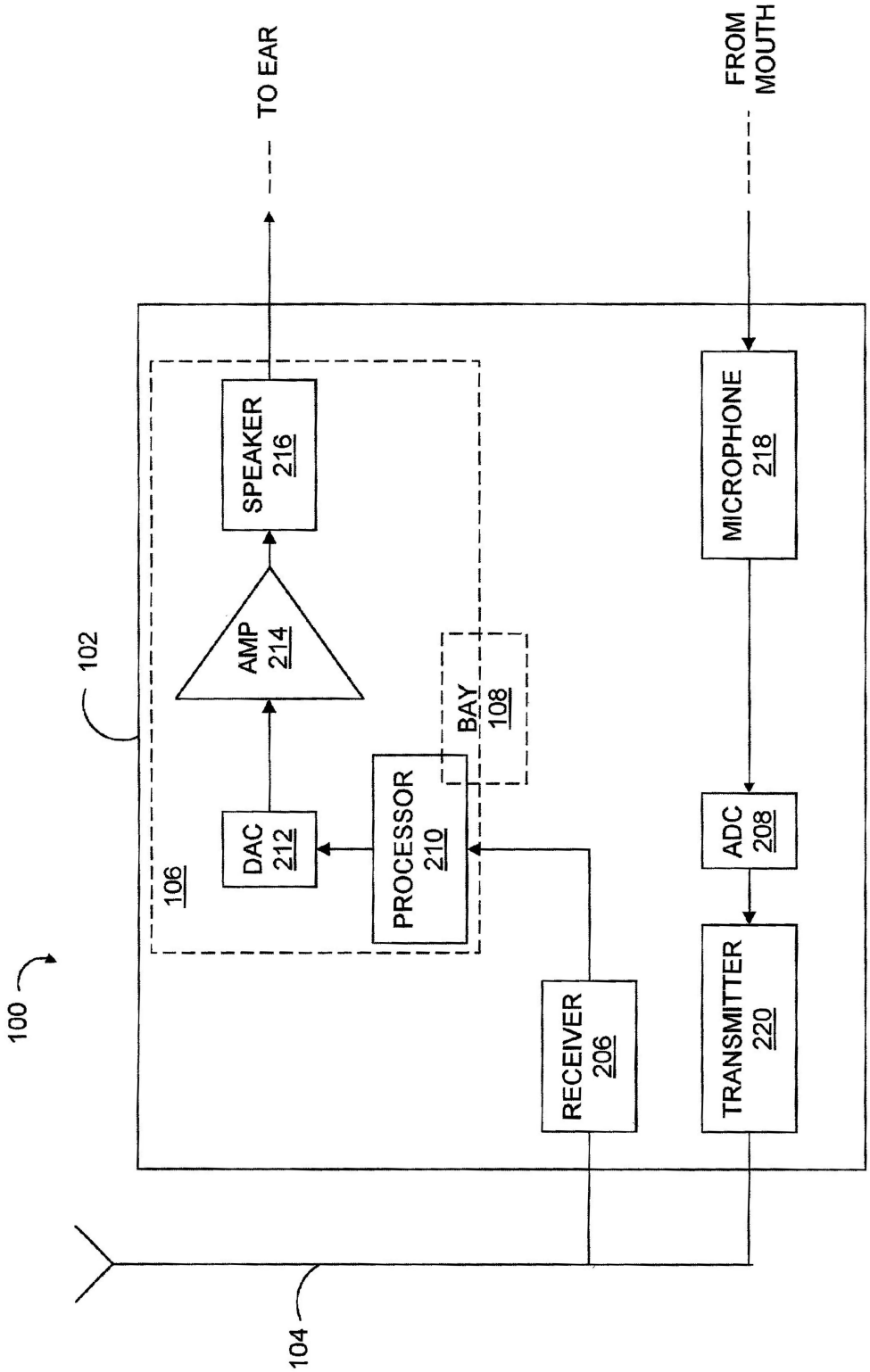
100
102
104
106
TO EAR
FROM MOUTH
SPEAKER 216
AMP 214
DAC 212
PROCESSOR 210
BAY 108
RECEIVER 206
MICROPHONE 218
ADC 208
TRANSMITTER 220

FIGURE 2A

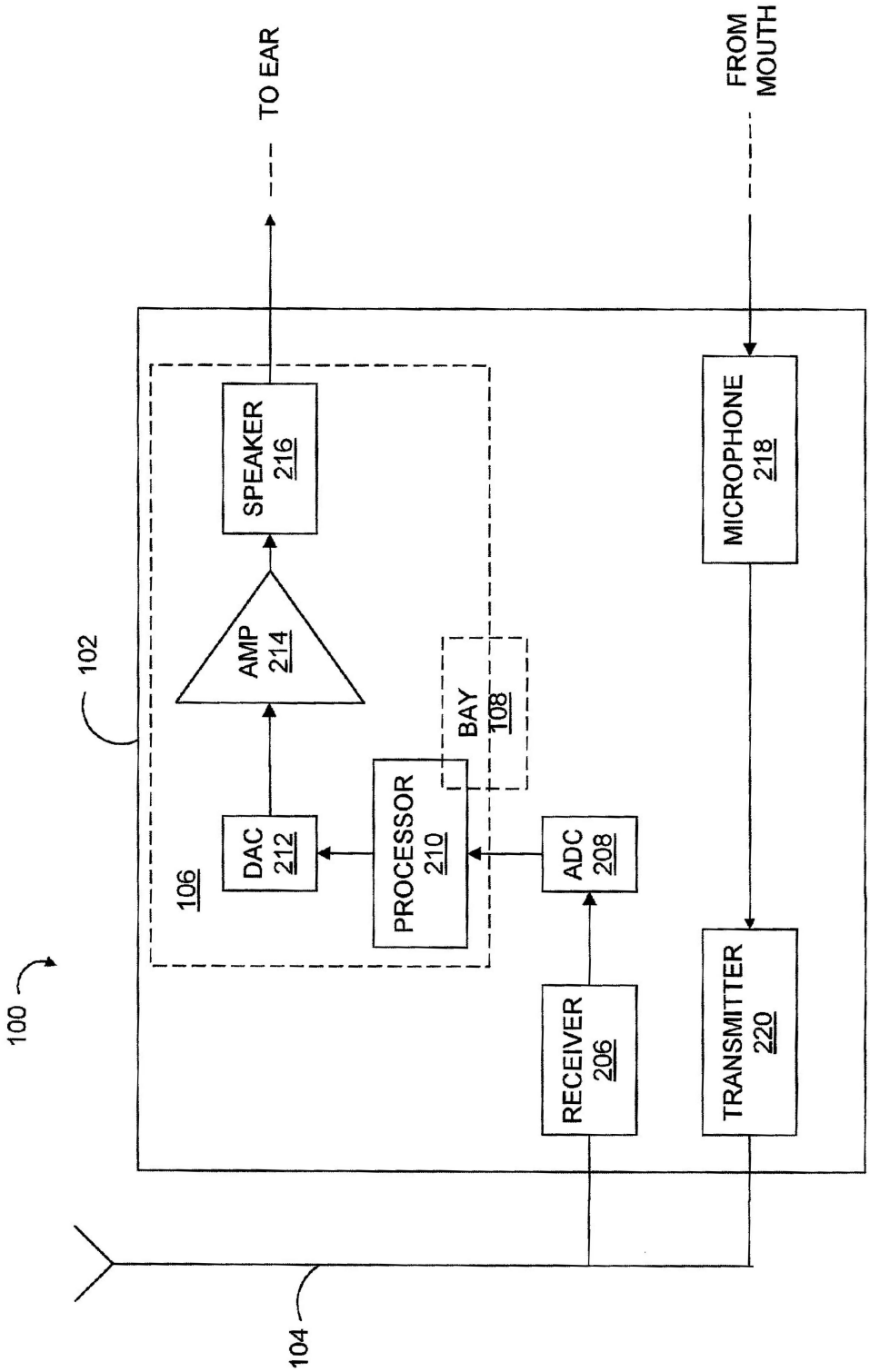
100
102
104
106
TO EAR
FROM MOUTH
SPEAKER 216
AMP 214
DAC 212
PROCESSOR 210
BAY 108
ADC 208
RECEIVER 206
MICROPHONE 218
TRANSMITTER 220

FIGURE 2B

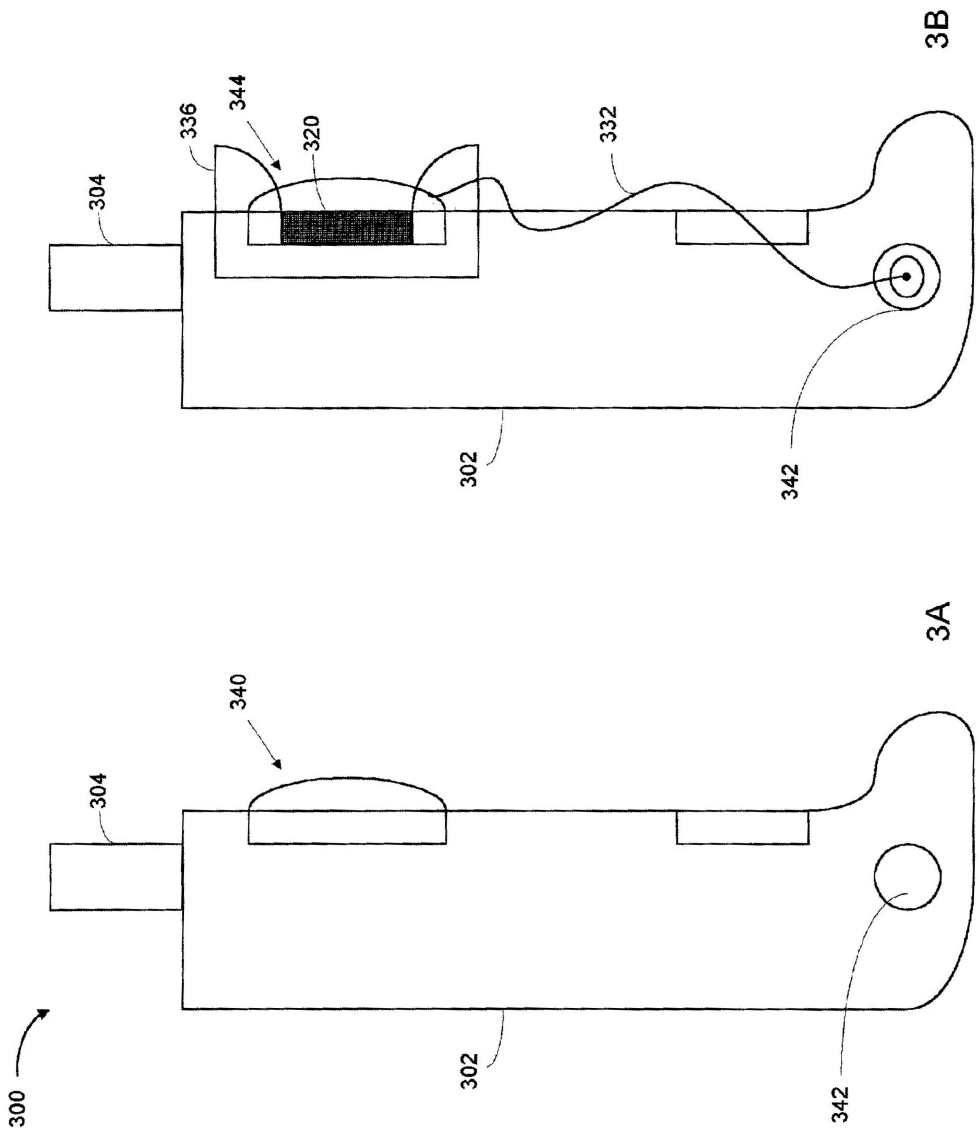

FIGURE 3

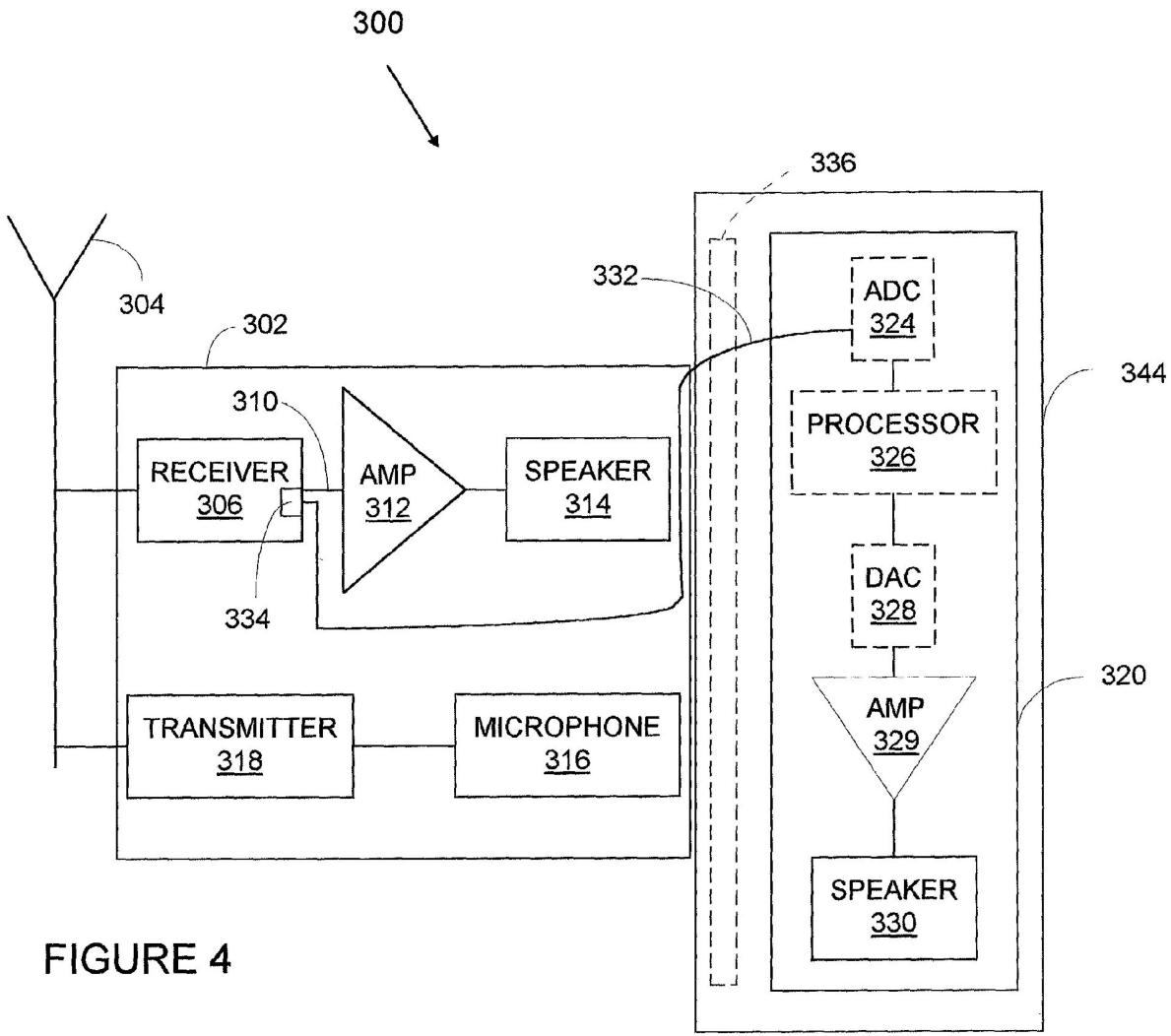
300
304
302
310
RECEIVER
306
AMP
312
SPEAKER
314
334
TRANSMITTER
318
MICROPHONE
316
332
336
ADC
324
PROCESSOR
326
DAC
328
AMP
329
SPEAKER
330
344
320

FIGURE 4

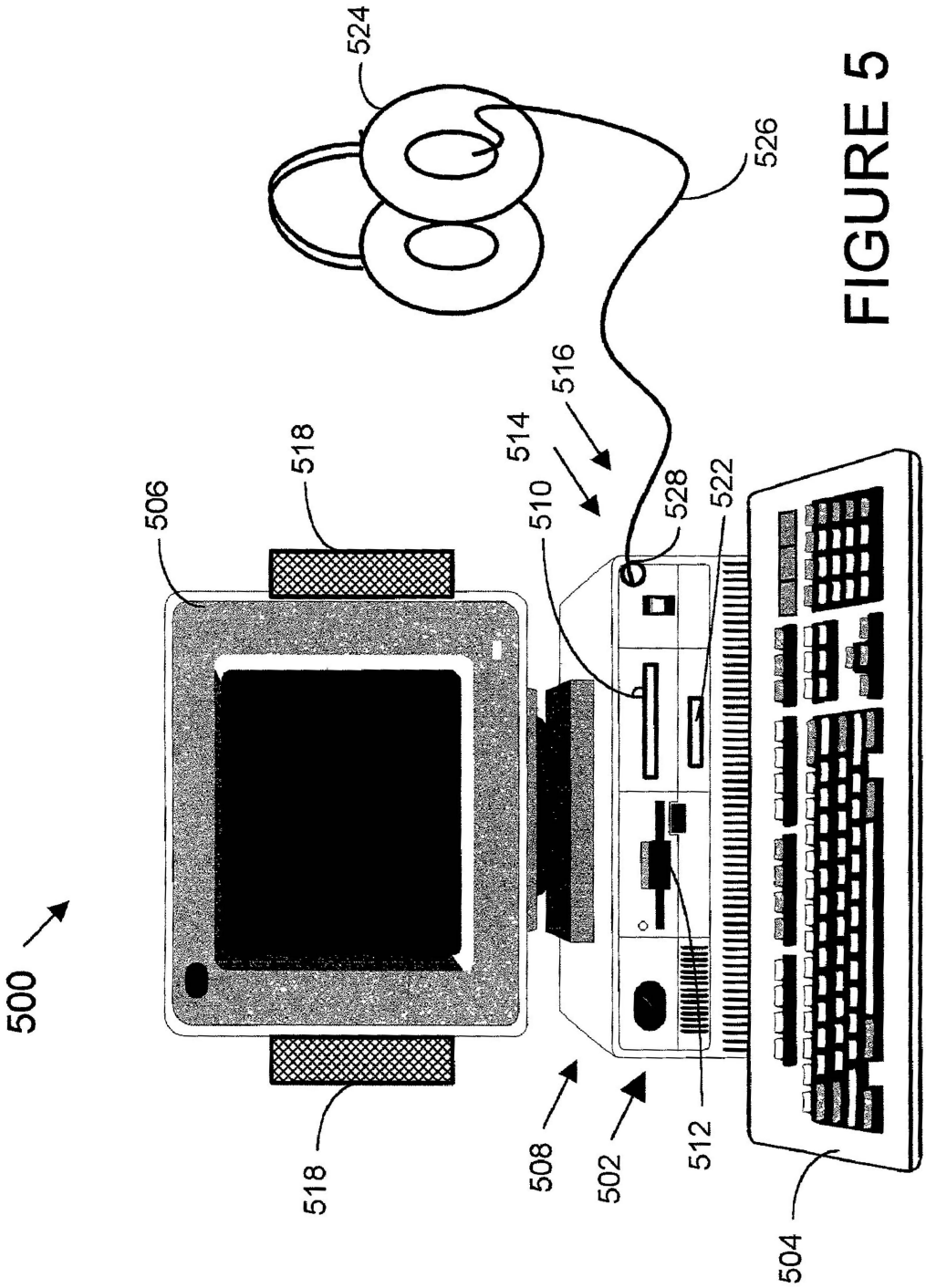

FIGURE 5

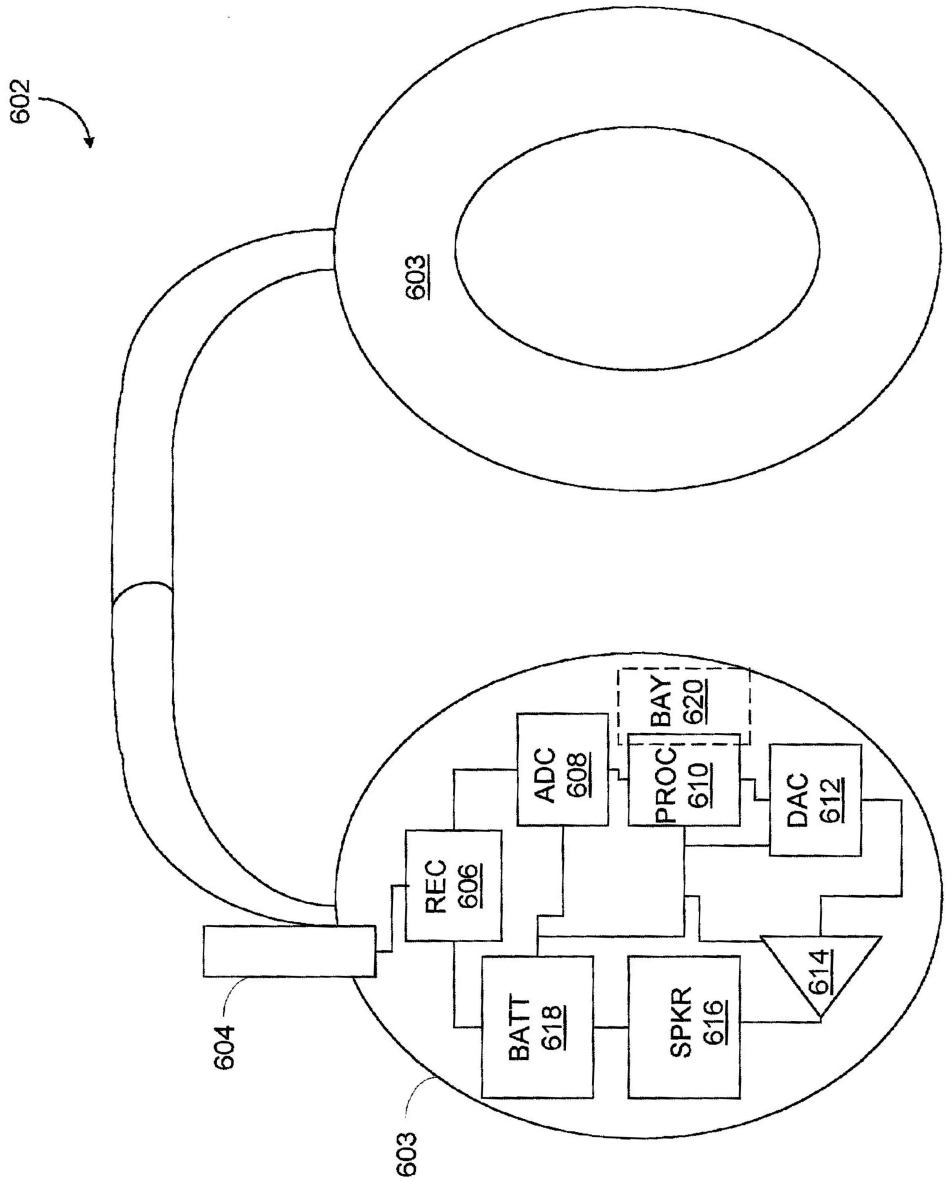
602
603
604
603
REC
606
ADC
608
BAY
620
PROC
610
DAC
612
BATT
618
SPKR
616
614

FIGURE 6

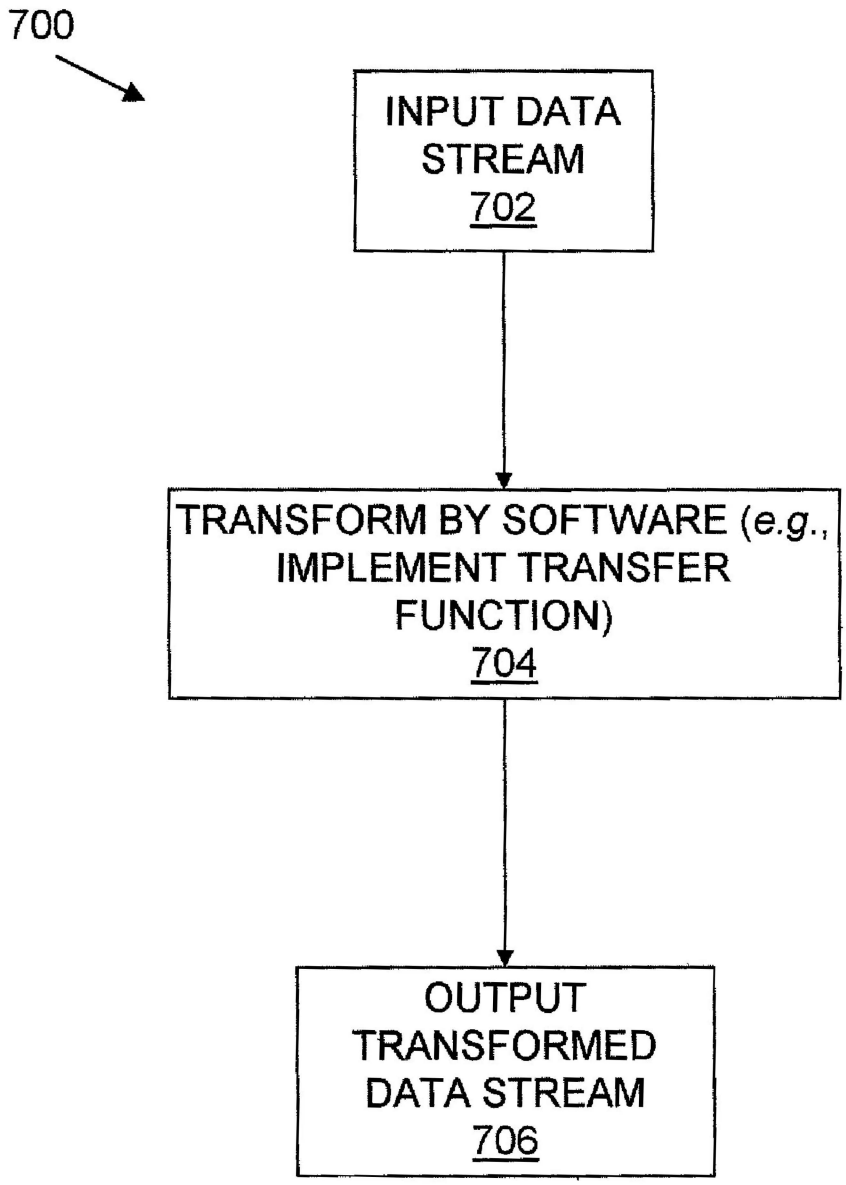
700
INPUT DATA STREAM 702
TRANSFORM BY SOFTWARE (e.g., IMPLEMENT TRANSFER FUNCTION) 704
OUTPUT TRANSFORMED DATA STREAM 706

FIGURE 7

INTERGRATED HEARING AID FOR TELECOMMUNICATIONS DEVICES

TECHNICAL FIELD OF THE INVENTION

[0001] The present invention relates to telecommunications and telephonic devices, and more specifically to the use of telecommunications devices by wearers of hearing aids.

BACKGROUND OF THE INVENTION

[0002] Millions of Americans suffer from hearing loss. Most commonly, hearing loss is of one of four types. In slope loss, the ability to hear high frequencies is lost while the ability to hear sounds in the low frequencies is retained. In reverse slope loss, the ability to hear low frequencies is lost while the ability to hear sounds in the high frequencies is retained. Less frequently, the hearer loses the ability to hear sounds in all normally audible frequencies. Finally, some people lose the ability to hear in only a small range of frequencies.

[0003] Typically, someone who suffers from hearing loss wears a hearing aid. Hearing aids are electroacoustical devices worn to compensate for a hearing impairment by amplifying sound. They include aids placed behind the ear, aids placed in the ear, and aids placed in the external auditory canal. Hearing aids generally consist of a microphone, an amplifier, and a speaker, but are increasingly sophisticated instruments. Many have automatic gain control and digital signal processing; they can often be programmed to remedy a specific pattern of frequency loss specified by a user's prescription. Hearing aids utilize analog or digital circuitry. Most hearing aids in use today are analog.

[0004] Programmable hearing aids include amplifiers and filters controlled by an external digital source. Typically, such a hearing aid will include a memory module and a microprocessor to access the memory locations and to control the frequency response.

[0005] Gain is a measure of amplification. The acoustic gain of a hearing aid is the difference in dB between the output and the input at a particular frequency. Frequency response specifies hearing aid gain as a function of frequency when the volume control is in the normal operating range. Circuits that automatically change the gain or frequency response in response to changes in the input signal are called automatic signal processing (ASP). In hearing aids, most types of ASP modify only the gain.

[0006] Although hearing aids are of particular use in conversations and other face-to-face situations, they are less useful when combined with signals from electronic device, such as a wireless telephone. Feedback, distortion and radio frequency (RF) interference often interfere with a wearer's hearing aid. Some hearing aid wearers report interference from simply walking past a wireless device in use. As the use of wireless communications devices proliferates, this problem is becoming more and more serious.

[0007] What is needed is an invention that allows hearing aid wearers to use electronic and telecommunications devices, such as wireless telephones, without interference and while enabling them to compensate for their frequency loss.

SUMMARY OF THE INVENTION

[0008] The present invention includes an apparatus and method which allow a hearing aid to be integrated into a sound-producing device. Sound-producing devices compatible with the invention include wireless communications devices such as cellular telephones. In such uses, the hearing aid can be integrated with the earpiece, such as a headset or a handset. A programmable hearing aid can be programmed to compensate for the wearer's specific hearing loss. The mounting of the hearing aid is accomplished so that RF interference in the hearing aid output is avoided compared with conventional systems.

[0009] Copending application Ser. No. 08/639,651, incorporated herein by reference, describes an approach to decreasing interference between hearing aids and wireless communications devices. Application Ser. No. 08/639,651 concerns the use of ferrite materials in a flexible matrix to create an RF shadow that effectively avoids interference. This application applies the teachings of that application but also develops new approaches to reducing interference.

BRIEF DESCRIPTION OF THE FIGURES

[0010] **FIG. 1** is a schematic illustration of a handset of a wireless communication system in accordance with the present invention.

[0011] **FIGS. 2A and 2B** are block diagrams of alternative configurations of the electrical components of the system of **FIG. 1**.

[0012] **FIGS. 3A and 3B** show a wireless handset with a removable standard earpiece; and with a removable earpiece that includes a hearing aid.

[0013] **FIG. 4** is a block diagram of the electrical components of the system of **FIG. 3B**.

[0014] **FIG. 5** schematically illustrates a computer system in accordance with the present invention.

[0015] **FIG. 6** schematically illustrates headphones for use in systems of the present invention.

[0016] **FIG. 7** is a flow chart illustrating software implementation of the present invention.

DETAILED DESCRIPTION OF THE PREFERRED EMBODIMENTS

[0017] An integrated wireless telephone/hearing aid system **100** in accordance with the present invention is schematically illustrated in **FIG. 1**. In **FIG. 1**, the user's ear and mouth fit with a handset **102** as indicated in the figure. Wireless handset **102** also includes an antenna **104**, an integrated hearing aid device **106**, and a smart card bay **108**.

[0018] **FIGS. 2A and 2B** illustrate alternative configurations of the electrical components of the system of **FIG. 1**. **FIG. 2A** shows a digital wireless system. In the system shown in **FIG. 2A, a** wireless signal is picked up by handset antenna **104** and transmitted to integrated hearing aid device **106**. A receiver **206** receives the digital wireless signal picked up by antenna **104** and generates a digital audio signal. The audio signal is then transmitted to a processor **210**.

[0019] A user's prescription is programmed into processor **210**. Processor **210** transforms the signal by applying a transfer function with more gain in the frequency ranges where the user has lost hearing. The digital signal is then transmitted to a digital-to-analog converter (DAC) **212** where it is reconverted to analog. The signal then goes to an amplifier **214**, where it is amplified and sent to a speaker **216**. From speaker **216**, the sound enters the user's ear. In the opposite direction, a microphone **218** picks up sounds and sends them to an analog-to-digital converter (ADC) **208**. ADC **208** converts the signal to digital. The signal is then sent to a transmitter **220**, which transmits the signal via antenna **104**.

[0020] **FIG. 2B** shows an alternative embodiment including an analog wireless communications device. In the system shown in **FIG. 2B, a** wireless signal is picked up by handset antenna **104** and transmitted to integrated hearing aid device **106**. A receiver **206** receives and demodulates the analog signal picked up by antenna **104** and generates an audio signal. The audio signal is then transmitted to an analog-to-digital converter (ADC) **208**. Digital output from ADC **208** is transmitted to a processor **210**.

[0021] A user's prescription is programmed into processor **210**. Processor **210** transforms the signal by applying a transfer function with more gain in the frequency ranges where the user has lost hearing. The digital signal is then transmitted to a digital-to-analog converter (DAC) **212** where it is reconverted to analog. The signal then goes to an amplifier **214**, where it is amplified and sent to a speaker **216**. From speaker **216**, the sound enters the user's ear. In the opposite direction, a microphone **218** picks up sounds and sends them to a transmitter **220**, which transmits the signal via antenna **104**.

[0022] In alternatives, multiple prescriptions can be programmed into processor **210**. The multiple prescriptions can allow a single user with hearing loss in both ears to select between prescriptions and thus use either ear. Processor **210** can also be programmed with different prescriptions for different users. There are many ways various users can access different prescriptions. For example, each user can be given a code whose entry will cause implementation of his own prescription. Implementation can be by PBX, in which centralized processors store prescription codes, for example allowing employees to enter codes that tailor signals to their prescription at any company telephone. In other embodiments, switches on the handset can allow users to select their prescription from among programmed prescriptions.

[0023] Additionally, the processor is preferably programmable, so that the programming can be changed if a user's prescription changes, or to accommodate users not previously known to the system, e.g. visitors or users of public telephones. For example, the processor is reprogrammed if one user leaves the workplace and another user starts employment.

[0024] In a preferred embodiment, a user's prescription can be programmed into a "smart card", a memory card such as a PCMC (personal computer memory card) or SIM (Subscriber Identity Module) card. In this embodiment, the wireless phone is equipped with a memory card bay (sometimes called a "socket" or a "slot") into which such cards fit.

[0025] Such cards act as memory modules that connect with a motherboard or the system's expansion bus. Typically, the card plugs into a 68-pin interface that connects the card to the system through an adapter. The adapter allocates resources to the card based on software operating at the level of the BIOS. Smart cards are used for memory enhancements including one-time-programmable (OTP) memory, RAM, FLASH memory and electronically erasable programmable memory (EEPROM).

[0026] In a preferred embodiment, the wireless telephone handset includes a processor with a bus with which smart cards connect when they are inserted into the bay. A typical smart card is roughly the length and width of a credit card, but a little thicker. With prescriptions programmed into a smart card; users can easily carry cards about with them and insert them into any compatible wireless telephone or other device. The memory cards can also be used with other electronic devices such as personal computers, laptop computers, and computer games. Practically any consumer device can be equipped with a processor, bus, and memory card bay that allows a memory card to connect with the processor. Alternatively, if a motherboard is present, the memory card can connect with the motherboard.

[0027] In **FIGS. 2A and 2B**, smart card bay **108** is schematically illustrated as overlapping with processor **210** to indicate that a smart card in the bay connects with the processor. A particular advantage to the smart card approach is that a single user could have different smart cards that use different transfer functions based on the environments in which they will be used. For example, the requirements for a cellular telephone in a car, a wireless telephone in a noisy cafe, or a wireless telephone in a quiet place might be quite different. Furthermore, as the technology becomes standardized, users can carry their personal smart cards and will be able to use them in a wide variety of commonly encountered situations, such as public telephones, airplane passenger audio systems, and emergency assistance systems.

[0028] In another embodiment, a user's prescription can be programmed into a SIMM (single in-line memory module) and connected to a motherboard. In such an instance, the integrated hearing aid device could be used for a number of different users with different hearing losses, each of whom could attach his own SIMM to customize any compatible device. Users can select between particular prescriptions by means of codes or switches.

[0029] In alternatives, digital processing is not used, making the ADC, processor, and DAC unnecessary. The invention encompasses analog systems to assist the hearing impaired, in which an analog signal is transformed by an amplifier according to a frequency response appropriate to the user's specific hearing loss.

[0030] An alternative system in accordance with the present invention is shown in **FIGS. 3A and 3B**. **FIG. 3** illustrates a system in which a wireless telephone system includes removable and replaceable earpieces, so that a handset earpiece for users with hearing loss can replace a standard earpiece. The earpieces can be customized to a particular hearing loss or can be programmable. A wireless telephone/hearing aid system **300** with a removable and replaceable earpiece is shown in **FIGS. 3A and 3B**. A wireless handset **302** includes an antenna **304**, an earpiece **340** or **344**, and an audio cable jack **342**. **FIG. 3A** illustrates a handset with a removable earpiece **340**. Earpiece **340** is designed for non-hearing-impaired users.

[0031] **FIG. 3B** illustrates the handset of **FIG. 3A** where earpiece **340** has been replaced by a removable earpiece **344** that includes a hearing aid device. As shown in **FIG. 3**B, earpiece **344** includes a hearing aid **320**, an audio cable **332**, and an ear shroud **336** to screen background noise. Audio cable **332** plugs into audio cable jack **342**, as shown in **FIG. 3B**. Ear shroud **336** preferably includes attenuating materials such as ferrites, conductive materials, and/or metallic composites. The attenuating materials can be disposed in a flexible medium such as silicone rubber.

[0032] **FIG. 4** illustrates the electrical components of the system of **FIG. 3**. In **FIG. 4, a** wireless telephone handset **302** comprises an antenna **304**, a receiver **306**, an amplifier **312**, a speaker **314**, a microphone **316**, and a transmitter **318**. Removable earpiece **344** includes a hearing aid **320**. Hearing aid **320** comprises an analog-to-digital converter (ADC) **324**, a processor **326**, a digital-to-analog converter (DAC) **328**, an amplifier **329**, and a speaker **330**.

[0033] In operation, an audio cable **332** is connected to an output **334** of receiver **306**. The analog signal **310** from receiver **306** is input into ADC **324** of hearing aid **320** via audio cable **332**. Amplifier **312** and speaker **314** of handset **302** are bypassed. Although the connection is shown through external audio cable **332** plugged into jack **342** (as shown in **FIG. 3**), the connection can be internal, as for example through pins. The connection can also be by infrared links. In these cases, cable **332** and jack **342** are absent. In preferred embodiments, the signal is intercepted before it has been shaped by the amplifier of the parent device. This typically simplifies the processing of the signal. However, as would be apparent to those skilled in the art, the signal can be intercepted in other places along its pathway.

[0034] A layer **336** of attenuating material is located between telephone **302** and hearing aid **320**. In the preferred embodiment, the attenuating material is disposed between antenna **304** and hearing aid **320** so as to create an RF shadow between the antenna and the hearing aid.

[0035] Processor **326** transforms the signal to compensate for the user's particular hearing loss. For example, if the user has a slope loss (i.e., can hear low frequencies but progressively loses high frequencies), the processor boosts the high frequencies. Conversely, if the user has a reverse slope loss (i.e., can hear high frequencies but not low), the processor boosts the low frequencies.

[0036] In an alternative, replacement earpiece **344** includes an analog hearing aid. In this embodiment, ADC **324**, processor **326**, and DAC **328** are omitted, and audio cable **332** connects directly to amplifier **329**. Amplifier **329** amplifies the signal from receiver **306** with a certain frequency response, depending on the particular hearing impairment to be compensated for. In an alternative, the standard earpiece includes the amplifier and speaker for the handset, so that the handset amplifier and speaker are removed when the standard earpiece is removed.

[0037] In alternative embodiments, the processed output can be transmitted to a cochlear implant instead of to a conventional hearing aid. A cochlear implant is a surgical implantation of electrode wires into the cochlea to deliver direct electrical stimulation to the sensory cells of the cochlea, which in turn stimulate the auditory nerve. The opposite end of the wire is typically attached to a receiver embedded in the mastoid bone; the wire typically exits through the skin behind the ear. The electrode wire in a typical cochlear implant connects to a signal or speech processing box; a microphone worn behind the ear picks up sound and transmits it to the processing box. The processing box selects, amplifies, digitizes, filters, and/or codes the sound and transmits the sound signal to a transmitter coil also behind the ear. The codes are then sent to the implanted receiver, which converts the codes to electrical impulses that are sent to the electrodes.

[0038] In one embodiment of the present invention, the signal processing occurs in the processor of embodiments described above, for example, in a handset, wireless communications device, computer, or headphones. The processed signal can be transmitted directly to the implanted receiver or can be sent directly to the implanted electrode wire of a cochlear implant via, for example, a bus or a jack.

[0039] In this specification, wireless includes analog cellular, digital cellular, personal communication systems (PCS) and cordless phones, along with other wireless applications such as headsets for televisions, radios, hi-fi sound systems, home entertainment, movie theater seats, auditory loop systems, and other uses. The invention is also compatible with non-wireless telephone handsets and non-wireless speaker systems. As discussed supra, when appropriate, the receiver can be omitted.

[0040] **FIG. 5** shows a computer system configured in accordance with the present invention. A computer system **500** includes a processor **502**, a keyboard **504**, a monitor **506**, an internal modem **508**, a CD ROM bay **510**, floppy disk slot **512**, internal hard disk storage **514**, an amplifier **516**, and speakers **518**. Processor **502** modifies (according to a transfer function appropriate to the user's hearing impairment) a digital signal that can come from sources including the modem, the CD ROM, or storage on disk. The signal is sent first to a DAC and then to speakers **518**. As discussed supra, where appropriate, smart cards can be inserted into a smart card bay **522**. Alternatively (or additionally), the transformed signal can be sent to earphones **524** via a cable **526** attached to an audio jack **528** of system **500**. If both earphones and speakers are used, the system can be used simultaneously by hearing-impaired and non-hearing-impaired users. Although computer system **500** is illustrated by a PC system, those skilled in the art would be aware that the invention is equally compatible with other computer systems, including laptop or palmtop devices, or computer networks. In a computer network, signal processing can occur away from the user's terminal.

[0041] In alternative embodiments, a hearing aid component can be integrated into a headset, handset, or speaker. In an embodiment depicted in **FIG. 6, a** wireless headset **602** includes earcups **603** that fit over a user's ears, an antenna **604**, a receiver **606**, an ADC **608**, a processor **610**, a DAC **612**, an amplifier **614**, and a speaker **616**. Wireless headset **602** can be designed to be used with electronic devices including a television set, a computer system, or audio systems including home entertainment systems, radios, tapes, and compact discs. In a preferred embodiment, the power is supplied by a battery **618**. An optional smart card bay **620** allows insertion of a smart card.

[0042] In alternative embodiments, instead of being "wireless", an earphone or a headset can be plugged into a jack in

the device. In such a case, the connection can include an audio cable and an AC cord to power the earphone or headset. As discussed supra, an earphone can be dedicated to a particular prescription; each ear can be programmed to a separate prescription; multiple prescriptions for each ear can be programmed to enable different users to access the proper prescription; or the use of transformed and non-transformed signals can allow simultaneous use by hearing-impaired and non-hearing-impaired users.

[**0043**] In embodiments in which the hearing aid component is in a headset or handset or other speaker component, interference can be significantly decreased by the design of the handset or headset. Because the integrated hearing aid is not constrained by the very small size of typical hearing aids, hearing aid wires and the handset wires can be set in cross-orientation from each other, thereby lessening interference. In addition, greater use can be made of filtering and shielding materials, and sensitive circuits can be placed in low-electromagnetic-noise areas of the handset or device.

[**0044**] The invention can be implemented by software. The invention comprises signal processing by transfer functions, and as is well known in the art, linear transfer functions can be implemented by software using input-output difference equations. Taking an input of amplitude values, the output at time i is a weighted combination of the input at i and several previous inputs. The coefficients depend on the transfer function.

[**0045**] A flow chart schematically illustrating a method **700** implemented by the software is shown at **FIG. 7**. A data stream is input at a step **702**. The data stream includes signal amplitude values at a sequence of times. The data stream is transformed by the software, at a step **704**. The transformation can be, for example, implementation of a transfer function characterizing the user's hearing aid prescription. Alternatively, the transformation could be a non-linear, time-variable, or adaptive filter. At a step **706**, the transformed data stream is output at each time i as a weighted combination of several previous inputs.

[**0046**] Although much of the discussion has concerned linear transfer functions, the invention is also compatible with nonlinear systems. For example, an adaptive "anti-noise" capability can be used to effect hearing improvement. In alternatives, digital processing is not used. The invention encompasses analog devices, in which an analog signal is amplified across a certain frequency range. In wireless uses, a receiver is often necessary because the incoming signal must be demodulated. However, in other systems, a receiver may not be needed and the signal can be directly presented to the ADC or amplifier. The invention is also compatible with ISDN (Integrated Services Digital Network) or GSM (Global System Mobile) communications devices. Those skilled in the art will recognize other variations, modifications, and adaptations of the present invention, the scope of which is limited only by the following claims.

What is claimed is:

1. A system for compensating for hearing impairment comprising:

an electronic device for producing sound in response to an electrical signal; and

a hearing aid device for compensating for a hearing impairment including a hearing aid amplifier, said hearing aid device intercepting the electrical signal, transforming the electrical signal according to the hearing impairment, and generating sound according to the transformed electrical signal.

2. A wireless communications system comprising:

a wireless telephone including:

a receiver;

a transmitter;

a microphone;

a telephone speaker; and

a hearing aid device including a hearing aid amplifier.

3. A system as described in claim 1 or claim 2 further including:

a processor, said processor receiving and transforming said electrical signal according to the hearing impairment.

4. A system as described in claim 1, claim 2, or claim 3, wherein said electrical signal is transformed to compensate for a slope hearing impairment.

5. A system as described in claim 1, claim 2, or claim 3, wherein said electrical signal is transformed to compensate for a reverse-slope hearing impairment.

6. A system as described in claim 1, claim 2, or claim 3, wherein said electrical signal is transformed to compensate for the particular hearing impairment of an individual person.

7. A system as described in claim 1 or claim 2 wherein said electronic device and said hearing aid are housed within a single housing.

8. A system as described in claim 3 further including:

portable memory means, connectable to said processor, for storing a function according to which said electrical signal is transformed.

9. The system of claim 1 or claim 2 wherein said hearing aid transforms said signal according to a transfer function.

10. The system of claims **1**, **2** or **3** wherein said hearing aid transforms said signal according to a nonlinear function.

11. The system of claim 4 wherein said portable memory means is a Subscriber Identity Module (SIM) card.

12. The system of claims **1**, **2**, or **3** wherein the electronic signal is sent to an analog-to-digital converter, then to the processor, and then to a digital-to-analog converter.

13. The system of claim 1 or claim 2 in which an audio cable connects the hearing aid device with the electronic device for producing sound.

14. The system of claim 1 or claim 2 in which the hearing aid device is powered by alternating current.

15. The system of claim 1 or claim 2 in which the hearing aid device is powered by a battery.

16. The system of claim 1 in which the electronic device is a computer system.

17. A method of compensating for hearing impairment comprising:

inputting an electrical signal into an electronic device that produces sound in response to an input electrical signal;

intercepting, by a hearing aid device, said electrical signal;

transforming, by said hearing aid device, said electrical signal according to a hearing impairment; and

outputting, from said hearing aid device, sound according to the transformed electrical signal.

18. The method of claim 17 in which said transforming step further comprises transforming by means of a processor.

19. The method of claim 17 or claim 18 in which said electronic device is a wireless telephone.

20. The method of claim 17 or claim 18 in which said electronic device is a computer.

21. The method of claim 17, claim 18, claim 19 or claim 20 further comprising the step:

accessing, by said processor, a portable memory means, connectable to said processor, for storing a function according to which said electrical signal is transformed.

22. The method of claim 17 or claim 20 wherein said transforming is implemented by software.

* * * * *