(12) INTERNATIONAL APPLICATION PUBLISHED UNDER THE PATENT COOPERATION TREATY (PCT)

(19) World Intellectual Property Organization
International Bureau

(43) International Publication Date
10 July 2003 (10.07.2003)

PCT

(10) International Publication Number
WO 03/056790 A1

(51) International Patent Classification[7]: H04M 1/60, 1/725

(21) International Application Number: PCT/SG02/00001

(22) International Filing Date: 4 January 2002 (04.01.2002)

(25) Filing Language: English

(26) Publication Language: English

(71) Applicant and
(72) Inventor: GOH, Koon, Yeap [SG/SG]; Blk 516, #13-244, Serangoon North Avenue 4, Singapore 550516 (SG).

(74) Agents: HAQ, Murgiana et al.; Haq & Selvam, 80 Raffles Place, UOB Plaza 1, #42-02, Singapore 048624 (SG).

(81) Designated States *(national)*: AE, AG, AL, AM, AT, AU, AZ, BA, BB, BG, BR, BY, BZ, CA, CH, CN, CO, CR, CU, CZ, DE, DK, DM, DZ, EC, EE, ES, FI, GB, GD, GE, GH, GM, HR, HU, ID, IL, IN, IS, JP, KE, KG, KP, KR, KZ, LC, LK, LR, LS, LT, LU, LV, MA, MD, MG, MK, MN, MW, MX, MZ, NO, NZ, OM, PH, PL, PT, RO, RU, SD, SE, SG, SI, SK, SL, TJ, TM, TR, TT, TZ, UA, UG, US, UZ, VN, YU, ZA, ZM, ZW.

(84) Designated States *(regional)*: ARIPO patent (GH, GM, KE, LS, MW, MZ, SD, SL, SZ, TZ, UG, ZM, ZW), Eurasian patent (AM, AZ, BY, KG, KZ, MD, RU, TJ, TM), European patent (AT, BE, CH, CY, DE, DK, ES, FI, FR, GB, GR, IE, IT, LU, MC, NL, PT, SE, TR), OAPI patent (BF, BJ, CF, CG, CI, CM, GA, GN, GQ, GW, ML, MR, NE, SN, TD, TG).

Published:
— *with international search report*

For two-letter codes and other abbreviations, refer to the "Guidance Notes on Codes and Abbreviations" appearing at the beginning of each regular issue of the PCT Gazette.

(54) Title: MULTIFUNCTION DIGITAL WIRELESS HEADSET

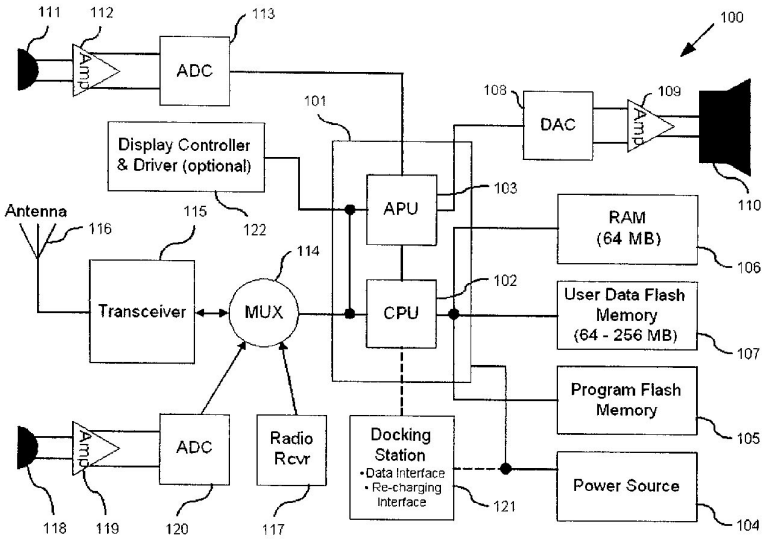

(57) Abstract: A headset for multifunctional usage comprises at least one speaker (110), a microphone (111, 118), a central processing unit (102) for processing binary data, an audio processing unit (103) for processing an audio signal, a memory device (105, 106, 107), a short-range wireless network interface (115, 116) for enabling a binary data communication of the headset with surrounding communication devices, and an extensible operating system executable in the central processing unit (102). Furthermore, the central processing unit (102) is connected to the audio processing unit (103), to the memory device (105, 106, 107) and to the short-range wireless network interface (115, 116) for transferring the binary data. Finally, the audio processing unit (103) is connected to the microphone (111, 118) and to the at least one speaker (110) for transferring the audio signal.

WO 03/056790 A1

Bose Exhibit 1005
Bose v. IngenioSpec

MULTIFUNCTIONAL DIGITAL WIRELESS HEADSET

BACKGROUND OF THE INVENTION

The invention relates to a headset, and more specifically to a digital wireless headset. Throughout the following description and claims the term "headset" stands for either a headphone, an earphone or any other microphone loudspeaker combination which is fixed at a users body.

Presently available personal mobile devices are used for communications, e.g. mobile phones and personal organizers like personal digital assistants (PDAs), or for entertainment purposes, e.g. MP3 players and portable game consoles. The voice and/or sound services of these personal mobile devices are usually provided through some built-in microphone and/or loudspeaker or via an externally attachable microphone and/or earphone. Because of the inherent design limitations (e.g. loudspeaker size, open/noisy environment, limited processing power and resources), the audio quality is hardly optimal. While the audio functions are now incorporated in many mobile devices, the user has little or no means to optimally integrate the voice and sound services (e.g. the user may like to use one of his/her mobile devices as a centralized audio output device due to its better audio quality or features even though such an arrangement is not readily available) and tailor the voice and sound services to meet his/her changing needs at different situations and/or times.

On the other hand, the presently available communication headsets are passive speaker-sets which combine at least one loudspeaker and/or a microphone. The loudspeaker usually can be placed next to an ear of a user or inside of the ear, and the microphone can be placed before the user's mouth. There are already known wired as well as wireless headsets. The known wireless headsets have the purpose to enable a wireless communication connection to an accessory base communication device. The base communication device can be both a communication device owned by the user, e.g. a personal mobile phone or a notebook computer, and a communication device provided by any third party. The wireless communication connection currently enables

either an unidirectional communication from the base communication device to the wireless headset like for a MP3 headset, or a bidirectional communication between the base communication device and the wireless headset like for a Bluetooth™ headset. But all these headsets are basically an accessory to the base communication device for converting electrical signals into sound waves or vice versa.

In [1] a communication system is disclosed which provides two-way wireless communication between a user and at least one remote device. The communication system comprises at least one earpiece worn by the user and a personal communication device for receiving and transmitting signals over a wireless link to and from the earpiece. The personal communication device includes voice recognition circuitry which recognizes and interprets voice commands of the user. The personal communication device is configured to determine a remote device to receive each of the voice commands, and transmits the appropriate voice commands to the remote device, accordingly.

The disclosed communication system covers the personal communication device by the concept of personal communications node (PCN) and mentions the earpiece as an essential part of the system. Additionally, the communication system has the ability to transmit communication signals between the earpiece and the PCN wirelessly. However, the earpiece itself represents a passive device which is not able to work as a standalone device. The PCN which works as active device in the disclosed communication system is separately arranged to the earpiece. Therefore, the separate PCN is also an essential part of the disclosed communication system. The primary role of the PCN is to act as a transmitter for transmitting the voice commands of a user to remote devices, or for transmitting audio signals from a remote device to the earpiece. However, the communication link from the PCN to the remote device has to be pre-arranged with a wired means, e.g. via a universal adapter or via a direct connection between the PCN and the remote device. Further, the PCN may include functions like interpretation and translation of voice commands through a software library or a look-up table into control code for transmitting them to an appropriate remote device. This voice command recognition function with its general software architecture based on the software library or the look-up table is fundamentally a closed feature/system. That is, the voice commands and most other software features are basically fixed

and are almost solely defined by the PCN at its inception. This is despite the fact that such software is stored on some programmable memory chips. Thus, the voice command recognition function of the PCN has the problem that it is not extensible for any ad-hoc communication or control of a newly added remote device. Additionally, the PCN may comprise a unit for adaptive speech filtering and noise cancellation. However, such a unit for adaptive speech filtering and noise cancellation is unlikely optimal, because the phase differences in time and space could be significant between the PCN and the earpiece, especially if the user is in an active movement. Finally, if there is no remote device, any operation of the whole communication system is disabled.

An information delivery system for delivery of audible information to a plurality of end-users is disclosed in [2]. The information delivery system comprises a master controller connected to a plurality of remotely-located information sources and to a plurality of remotely-located end-user information devices. The master controller connects to a plurality of distant local controllers via a data transport network, including a public switched telecommunications network and a broadcast data transport network. Each local controller includes a sound synthesizer which connects to an end-user audio device, such as a loudspeaker system, a tape recorder, or earphone. The master controller collects textual information items from the plurality of information sources and enables editing of the items' text to replace words which may be improperly converted to speech with phonetic equivalents, to remove references to illustrations, and to insert punctuation where necessary to improve the understandability of speech produced from the items' text. The master controller also enables assignment of categories to each text item based, in part, upon keywords contained in the item. Upon receipt of an information item by a local controller, the text of the item is converted into audio signals for output to an end-user audio device. Because information items are end-user selectable and because audible delivery of an information item is end-user schedulable, the system enables hands-free and eyes-free receipt of desired information items at a time and place determinable by an end-user.

The disclosed information delivery system is focused on an audio info delivery, wired or wirelessly. It is mentioned that both the master controller and the local controllers have the capability of data storage. The information delivery system covers extensively the voice/text

interchange and links-up periodically with the info providers to gather latest info. The master controller will subsequently deliver the personalized audio information in real time to the specific end-user's local controller. The local controller converts the personalized audio information and transmits it to the end-user audio device. Therefore, the master controller is an essential part of the information delivery system and the end-user audio device is only a passive device which will not work properly if the master controller and/or the local controller is/are not available.

An earphone-type music reproducing device for delivery of audio signals in the form of music to the ears of a user is disclosed in [3]. The earphone-type music reproducing device comprises a wristband-type remote control device and a headphone, which are wirelessly connected with each other. The wristband-type remote control device controls the headphone even if the headphone receives audio signals directly from a radio station. The earphone-type music reproducing device can be equipped with a storage device for supplying music to the user even if no reception of broadcasting signals is possible. Therefore, the earphone-type music reproducing device is a standalone device. However, the disclosed earphone-type music reproducing device is not an adequate communication device, because it is only able to receive audio signals but there is no possibility to receive data signals and convert them to audio signals, to send audio signals wirelessly to a remote foreign receiver, and/or to convert audio signals into data signals and to send them wirelessly to a remote foreign receiver. Therefore, the earphone-type music reproducing device is a passive device, because it offers the user only its original functionality without a possibility to enlarge its functionality.

In [4] a personal mobile communications device is disclosed which provides two-way wireless communication between a user and at least one remote device. The personal mobile communications device is separated into three parts: a primary unit which may be a long-range wireless communication device like a mobile phone for communicating with a remote device, a second unit which may be a wristband-type control device, and a third unit which may be a headset. The three parts of the personal mobile communications device are linked with one another wirelessly via short-range wireless communication connections. However, all three parts of the personal mobile communications device are essential parts for its operation and have to be carried on or near the person of a user. Therefore, the headset neither works as a standalone

device nor is it an active device. Even if the second unit and the third unit of the disclosed personal mobile communications device are combined, only a passive headset communication device results which is not able to work as a standalone device and which has only a restricted range of functionality.

As already mentioned above, a passive headset has some disadvantages. The most disadvantages yield a restriction of a user's mobility and/or a restriction of the functionality of the passive headset. However, especially in recent time personal mobile technology becomes more and more important. Therefore, a new headset is needed which enables a user to use the wide spectrum of modern mobile technology devices but does not restrict his/her mobility.

SUMMARY OF THE INVENTION

One main aspect of the invention is to provide a digital wireless headset for multifunctional usage, which offers the user a wide range of functionality. The digital wireless headset enables both an independent as well as a communicative operating mode at any time. The independent operating mode can also be called as a standalone operating mode.

A headset according to the invention enables a user not to stop or interrupt, even briefly, his/her works at-hand even if he/she makes a phone call, listens music, controls surrounding devices, and so on.

A headset for multifunctional usage comprises at least one speaker, a microphone, a central processing unit for processing binary data, an audio processing unit for processing an audio signal, a memory device, a short-range wireless network interface for enabling a binary data communication of the headset with surrounding communication devices, and an operating system being executable in the central processing unit. Furthermore, the central processing unit is connected to the audio processing unit, to the memory device and to the short-range wireless network interface for transferring the binary data. Finally, the audio processing unit is connected to the microphone and to the at least one speaker for transferring the audio signal.

One advantage of the invention over the prior art is that the headset according to the invention can be used as an active and standalone device, which makes a user independent from a surrounding base device. Therefore, the headset basically does not need a surrounding base device. Due to the operating system the central processing unit is able to operate the headset independently from a remote control device. Accordingly, this avoids a wired link for remotely controlling the headset. Due to the fact that the headset is wireless and comprises a memory device and a central processing unit, the headset does not need a surrounding base device to work. Another advantage of the invention is that the new headset will take up a very active role as a control center for surrounding communication devices sited around the headset in close range and for the control of any other remote devices through the close-range surrounding communication devices. In other words, the invention is considered to change the role of headset from a passive headset to an active one.

A further advantage of the invention is that the new headset placed directly over/around a user's head is the most convenient and appropriate tool for the user to execute commands, to communicate, and to gather the desired responses, e.g. information and music, promptly delivered to his/her ears. All these functions can be carried out without requiring the user to stop or interrupt, even briefly, his/her works at-hand.

According to a preferred embodiment of the invention, the headset further comprises an integrated power source. If the headset has installed an integrated power source like a battery or an accumulator, the headset can really be used wireless. Then, a user is able to use the headset at any place without the need of a socket for operating the headset.

The headset comprises preferably an interface for an optional wired communication and/or power connection. If the headset has an integrated power source which has run out and, therefore, is unable to deliver power for operating the headset, the user of the headset has to connect the headset to an external power source via a wired connection for operating the headset. This may be necessary, for instance, if the user has to do an emergency call via his/her headset and if the integrated power source has run out. And for the case that the user wants to connect the headset to a surrounding communication device which comprises no short-range wireless

network interface, the user has to connect the headset to the surrounding communication device via an appropriate communication line. In both cases the headset needs the possibility to enable a wired connection. This means, the headset needs to provide an appropriate interface. Such an appropriate interface may be either an interface wherein a wire between the surrounding communication device and the headset can be plugged and/or an interface to a docking station which works as transmitting and adapting switch. Such a docking station may further allow a convenient re-charging of the integrated power source of the headset via the interface, if the integrated power source is re-chargeable.

Preferably, the short-range wireless network interface connects the headset via a short-range wireless network communication, e.g. a Bluetooth™ network communication, with the surrounding communication devices. In this regard, Bluetooth™ seems to be the upcoming standard for short-range wireless communication. Alternatively or additionally, the short-range wireless network interface may connect the headset with the surrounding communication devices via an infrared data link (IrDA) and/or via a network communication based on the IEEE 802.11 protocol. The used protocol for the network communication is determined by the operating system executed in the central processing unit based on considerations such as protocol availability, communication clarity and/or power efficiency.

According to a preferred embodiment of the invention, the central processing unit is a real-time central processing unit comprising a real-time clock and a separate power source for supplying power to the real-time clock. Further, the central processing unit is preferably arranged in such a manner, that it can be programmed with a functionality program for achieving further functional characteristics of the headset. Further, the central processing unit of the headset can preferably be arranged in such a manner, that it can recognize voice commands of a user, and that it can control the headset via recognized voice commands. Then, the headset can be operated automatically and/or according to a user's imagination and/or with the availability of a wide range of functionalities and application programs.

The headset has preferably the functions of a sound card or is arranged to work as an audio player, e.g. a MP3 player, which is able to play music from binary audio data representing an

audio signal. The necessary binary audio data are saved in the memory device or transmitted during an audio communication via the short-range wireless network interface or via the wired communication connection. Further, the headset may alternatively or additionally provide the functions of a mobile phone. Then, the user of the headset is able to select the headset as alternative to his/her present mobile phone. By this, the headset is designed to actively explore the most efficient modes of operation under any environmental settings. Among others, the operating system of the headset is able to control the headset such that the headset may use its own mobile phone feature or that the headset uses a short-range communication connection to the user's present mobile phone. The operating system chooses the type of mobile phone connection according to the presently available protocols, power efficiency, clarity, etc.

The at least one speaker of the headset and/or the microphone are/is preferably incorporated in an earpiece of the headset. Thus, the incorporation of the microphone into the earphone yields in reduced dimensions required for the headset.

Preferably, the central processing unit and/or the audio processing unit is/are arranged to manipulate binary audio data representing an audio signal. Frequently a user desires to have an advanced audio processing. The headset can offer the user an advanced audio processing by a manipulation of the binary audio data. Advanced audio processing feasible by the headset may comprise units for respectively providing: real-time acoustic noise reduction, singing enhancement, karaoke voice cancellation, acoustic echo cancellation, active noise control, digital loudspeaker equalization, surround sound effect, realistic reverberation for a real concert hall acoustic, positive feedback cancellation for loudspeakers, three-dimensional position sound for three-dimensional games, and other audio effects. This advanced audio processing is especially desired when the headset has the functions of a sound card.

The above and other objects, features and advantages of the present invention will become apparent from the following description and the appended claims, taken in conjunction with the accompanying drawings in which like parts or elements are denoted by like reference numbers.

BRIEF DESCRIPTION OF THE DRAWINGS

Figure 1 shows a diagram of a headset circuit according to a preferred embodiment of the invention;

Figure 2 shows a headset being used according to the preferred embodiment of the invention;

Figure 3 shows the headset according to the preferred embodiment of the invention with a wide range of remote communication devices;

Figure 4 shows an overview over the headset according to the preferred embodiment of the invention;

Figure 5 shows an overview over a headset according to a further preferred embodiment of the invention; and

Figure 6 shows a headset being incorporated into a safety helmet according to another embodiment of the invention.

DETAILED DESCRIPTION OF A PREFERRED EMBODIMENT OF THE INVENTION

A preferred embodiment of the invention will now be described with reference to the attached drawings in which like parts or elements are denoted by like reference numbers.

Figure 1 shows a diagram of a headset circuit 100 according to a preferred embodiment of the invention. The headset circuit 100 comprises above all a digital processing device 101, which comprises a central processing unit 102 for processing binary data and an audio processing unit 103 for processing audio signals. For the power supply of the headset circuit 100 a power source 104 like a battery or an accumulator is installed and connected to the digital processing device 101.

In a read only memory, preferably a programmable memory, which is part of the central processing unit 102, the binary data for a core operating system are saved. The application-specific operating system or the operating system extension will reside in an external erasable and programmable memory device, e.g. a program flash memory 105. The operating system,

which is the combination of the core operating system and the operating system extension, is executed in the central processing unit 102 for operating the headset circuit 100. For executing the operating system in the central processing unit 102 the program flash memory 105 or a miniaturized hard disk drive such as an IBM MicroDrive™ extends the processing capacity of the central processing unit 102. A user of the headset can save user defined data like binary audio data representing audio signals in different memory devices. According to the present embodiment of the invention, a random access memory (RAM) 106 and a user data flash memory 107 or a miniaturized hard disk drive such as an IBM MicroDrive™ are available as memory devices. In the user data flash memory 107 an operating system extension can also be saved. Further, a third party's application program can also be saved in the code segment of the program flash memory 105 and/or the user data flash memory 107. For reducing the component count the program flash memory 105 and the user data flash memory 107 might physically be the same device. The needed size for the program or the user data, respectively, could be dynamically determined for optimum storage and operations in a common memory device like a semiconductor-based memory such as a flash memory or a miniaturized hard disk drive such as an IBM MicroDrive™.

The central processing unit 102 is able to manipulate the binary audio data for achieving an advanced audio processing. Therefore, the headset circuit 100 comprises the functions of a sound card for computers. The advanced audio processing could be executed and/or configured by a functional/application program which is loaded into one of the memories 105, 106, 107. Advanced audio processing feasible by the central processing unit 102 of the headset circuit 100 comprises respective units for providing: real-time acoustic noise reduction, singing enhancement, karaoke voice cancellation, acoustic echo cancellation, active noise control, digital loudspeaker equalization, surround sound effect, realistic reverberation for a real concert hall acoustic, positive feedback cancellation for loudspeakers, three-dimensional position sound for three-dimensional games, special sound synchronizing for preventing or minimizing signal to event racing problems in videos and games, audio signal amplifying and transmitting for audio signals received from a remote broadcasting device to send them amplified and/or in a relay mode to further remote headsets, and other audio effects.

The audio processing unit 103 is necessary to convert audio signals into corresponding binary audio data processable by the central processing unit 102 as well as to convert binary audio data into corresponding audio signals. Audio signals converted from corresponding binary audio data by the audio processing unit 103 are transferred via a digital to analog converter (DAC) 108 and a first amplifier 109 to a speaker 110. Due to the fact that binary audio data as well as digital audio signals are usually normalized to be processed in digital processing devices, the converted analog audio signals have to be amplified in the first amplifier 109 for operating the speaker 110. The speaker 110 is located in the ear-piece of the headset adjacent to an ear of the user of the headset and radiates the audio signals as sound waves for enabling the user to hear the audio signals.

Further, the headset circuit 100 comprises a first microphone 111 which is located in the mouth-piece of the headset adjacent to the mouth of the user of the headset. The first microphone 111 detects sound waves generated by the mouth of the user which are detected as analog audio signals. The user generated sound waves represent, for instance, commands for controlling the central processing unit 102 or a surrounding communication device, spoken text to be converted in written text, or a user-part of a conversation of the user with somebody else via a communication connection. The analog audio signals detected from the first microphone 111 are amplified by a second amplifier 112 and converted by a first analog to digital converter 113 to digital audio signals which are then transferred to the audio processing device 103 for being processed by the headset circuit 100.

A multiplexer (MUX) 114 is used in the headset circuit 100 to connect different communication interfaces to the digital processing device 101. A short-range wireless network interface based on the Bluetooth™ technology as well as on the IEEE 802.11 standard is incorporated into the headset circuit 100 and comprises a transceiver 115, preferably a Bluetooth™ transceiver, which is electrically coupled to an antenna 116. The digital processing device 101 is able to connect to and communicate with a surrounding communication device comprising a suitable transceiver interface. The deployed short-range wireless communication technology enables the user of the headset to use the headset as a mobile phone, as a walkie-talkie, as a reader of written text messages like electronic mails or messages transmitted using the

short message service (SMS), as a playing device for playing computer based music like MP3, or as a control center for any surrounding communication device comprising a suitable transceiver interface. The transceiver 115 is controlled via the multiplexer 114 from the central processing unit 102 and enables both sending and receiving of wireless communication data.

Alternatively, the user of the headset can use the headset as a mobile radio set. For that purpose the headset circuit 100 comprises a radio receiver 117 which is connected to and controlled by the digital processing device 101 via the multiplexer 114. The central processing unit 102 controls the radio receiver 117 for selecting a desired radio station and the radio receiver 117 transmits the received radio signals as audio signals via the audio processing device 103 to the speaker 110.

To offer more conveniences to the user of the headset the headset circuit 100 further comprises a second microphone 118 in the ear-piece of the headset adjacent to the speaker 110. The second microphone 118 has the purpose to enable an audio connection to the real world outside of the headset. Usually, headsets shield or lower a user's hearing of sounds generated in the adjacent real world. If the user would like to use the headset as a convenient mobile device but does not want to give up real sounds from its vicinity, the second microphone 118 offers a suitable way of adding the sounds of the real world to the sounds of the technical world of wireless communication. According to the first microphone 111 the detected sound waves of the second microphone 118 are amplified in the third amplifier 119 and converted to digital audio signals by the second analog to digital converter 120. These digital audio signals are now directly transmitted via the multiplexer 114 and the audio processing unit 103 to the speaker 110 or admixed in the audio processing unit 103 to other digital sound signals originating from the radio receiver 117 or from a short-range wireless communication.

Further, the central processing unit 102 is connected to a docking station 121. The docking station 121 is optional and only used, if the user is not able to receive data or application programs wirelessly. Then, the docking station 121 provides a possibility to connect the headset circuit 100 wired or via an IrDA transfer to a personal computer, a personal mobile phone or any other device. A wired connection between the headset circuit 100 and a remote personal

computer via the docking station 121 may be provided for example with an USB (universal serial bus) connection. The docking station 121 may further be used for re-charging of the power source 104 via a re-charging interface, if the power source 104 is re-chargeable.

Finally, the central processing unit 102 is connected to an optional display controller and driver 122 for controlling and driving an optional display like a liquid crystal display (LCD). Such a LCD can be used to display a setting control menu to the user, wherein the setting control menu is provided from the operating system running in the central processing unit 102 to control the headset circuit 100. The LCD could also be used for displaying the speech-to-text conversion during a user's dictation or as a control panel for the headset itself or for its connecting devices. The optional display controller and driver 122 may further comprise multifunctional control buttons, function buttons, and a volume control button.

Figure 2 shows a headset 200 being used according to the preferred embodiment of the invention. The headset 200 comprises a headset circuit 100 as described in Figure 1. Further, the headset 200 is worn and used by a user 201 who, for instance, makes a phone call 202, 205 via a surrounding mobile phone 203 which comprises a short-range wireless communication interface, according to the present embodiment of the invention a Bluetooth™ communication interface. The mobile phone 203 is connected via a public switched telephone network (PSTN) 206 to a provider, who guarantees phone calls with any telephone in the world. Alternatively, the user 201 of the headset 200 let the headset 200 read an email 202 received via a surrounding personal digital assistant (PDA) 204, which has to comprise a short-range wireless communication interface, according to the present embodiment of the invention a Bluetooth™ communication interface. The personal digital assistant 204 itself is connected via an internet connection 206 to an internet provider. Additionally, the user 201 can dictate into the headset 200, which converts the detected sound waves into a corresponding email 205 and sends it via the surrounding personal digital assistant 204 to the addressee of the email. As an alternative the mobile phone 203 and/or the PDA 204 are/is connected only to the headset 200 without a connection to the PSTN 206 or the internet 206, respectively. Then, the headset 200 is able to use the mobile phone 203 and/or the PDA 204 for data exchange and/or storage optimization. Further, the headset 200 is able to seek authorization from a remote device in the vicinity as display and control unit for

the remote device. Besides, as already mentioned above, the headset 200 comprising the headset circuit 100 having the operating system running in the central processing unit 102 is able to control its own functionality.

Further, the user 201 of the headset 200 may download a desired MP3 song from the internet 206, store the MP3 song in the internal memory of the headset 200 and play it at any desired time. The user 201 may not only download binary audio data like MP3 songs from the internet 206, he/she may also download emails, messages according to the short message service (SMS) protocol, programs for a better control of the headset 200, or device drivers for a surrounding communication device. The user 201 may also send emails and messages according to the short message service (SMS) protocol.

The download process may be executed completely via only one short-range wireless communication connection or, alternatively, partly via more than one short-range wireless communication connections. This means, that according to the present invention the download of a MP3 song desired by the user 201 from the internet may be done in two parts. The first part of the MP3 song is then downloaded via the WAP-enabled mobile phone 203 and the second part is downloaded via the internet-connected personal digital assistant 204. This has the advantage, that a long waiting time, which is determined by network speed and traffic constraints, during downloading of large files can be extremely reduced. However, this requires supplying a special software utility to the Internet sites or device nodes, which deliver the requested files, for understanding the headsets request to segment the large requested file, for knowing the specific channels to reach the headset, and for subsequently activating the multi-threads file downloading process.

The central processing unit of the headset 200 requests periodically or triggered by the user in the vicinity of the headset 200 for suitable surrounding communication devices. There are two possible kinds of surrounding communication devices: personal communication devices of the user, which are already pre-defined by the user and which will be the default communication devices to be used by the headset 200, and third party communication devices. Third party communication devices will be identified through a short-range wireless communication protocol

like Bluetooth™ or IEEE 802.11's service discovery protocol to supplement or enhance the communication channels of the headset 200. Given there are provided suitable surrounding communication devices like Bluetooth™ enabled mobile phones 203, Bluetooth™ enabled personal digital assistants 204, Bluetooth™ enabled computers, or similar devices, the central processing unit of the headset 200 communicates with all surrounding communication devices and uses all possible communication paths for carrying out the orders of the user 201. This also includes the splitting of download actions to yield a very quick result.

It should be mentioned, that the headset 200 can be controlled via function buttons and a display (for details see Figure 4) as well as via user voice commands. The functionality of the headset 200 can be extended via a learning process during which further user voice commands are added to the existing user voice commands. For a better sound quality the digital processing device of the headset 200 is additionally able to execute modern advanced audio processing as described above. Further, the headset 200 can be used as an advanced earphone for any game device comprising a short-range wireless communication interface, according to the present embodiment of the invention a Bluetooth™ communication interface, for connecting the earphone. The headset 200 may have some more functions than described above: programmable data encoding/decoding, data security as well as automatic selection and switching of communication protocols may also be provided. Due to the central processing unit, the incorporated operating system and the integrated memory device in the headset 200 it is also possible to extend the functions of the headset 200 through proliferating additional software applications, for instance, personal health care monitoring and other third party software.

Figure 3 shows the headset 200, e.g. accommodated in a safety helmet, according to the preferred embodiment of the invention with a wide range of remote communication devices.

The difference to Figure 2 is, that the user, according to the present embodiment a cyclist 301, is able to communicate with his headset 200 with a wide range of remote communication devices. As already described above, the cyclist 301 may make a telephone call or send or receive messages according to the short message service (SMS) protocol via a surrounding mobile phone 203, control the surrounding mobile phone 203 or a surrounding personal digital

assistant 204, or exchange data like electronic mails with the surrounding personal digital assistant 204. Each of the mobile phone 203 and the PDA 204 are able to connect the headset 200 with the PSTN 206 or the internet 206, respectively. Additionally, the headset 200 may communicate with further surrounding devices like a notebook or handheld computer 302, a wrist-watch type device 303, or a portable gaming device 304. Further, the headset 200 may receive broadcast programs from a radio station 305. Furthermore, the cyclist 301 may communicate with several devices at a local area network 306 at his home or in his office via any surrounding communication device and via the PSTN/internet 206. The several devices connected wired or wirelessly to the local area network 306 may comprise a network enabled personal computer 307, a network printer 308 and/or an internet-ready appliance 309. Such an internet-ready appliance 309 may be for example a fridge that could alert its stock status, like the status of beverages, so that the cyclist 301 could make purchases on his way home.

Figure 4 shows an overview over the headset 200 according to the preferred embodiment of the invention.

The headset 200 comprises a controller 400 with a multifunctional control button 401, a microphone 402, a display 403, function buttons 404, and at the case side a volume control button 405. The controller 400 is detachable from the headset 200 to facilitate user's checking of dictation, voice command learning or direct data/program entries by hand. For controlling the headset 200 all relevant settings can be chosen via the display 403 as well as the multifunctional control button 401 and the function buttons 404. The relevant settings can also be controlled via user voice commands if the voice print of the user is recognized and verified from the system. The voice print of voice commands can be used as a security/personalization feature. The operating system running in the central processing unit shows a setting control menu in the display 403 and enables a user to choose the relevant settings from this menu. To change the setting control menu in the display 403 the multifunctional control button 401 has to be rotated or pushed to choose menu left/right/up/down. Some standard functions of the headset 200 can be controlled and set directly via the function buttons 404.

For setting the sound volume of the headset 200 quickly and easily the volume control button 405 is installed on the case side of the controller 400. If the user prefers to set different volumes for the left and the right earpiece housing of the headset 200, the multifunctional control button 401 could be used to switch/select the left earpiece housing, the right earpiece housing or both earpiece housings of the headset 200. A similar volume control could also be realized via voice commands. The microphone 402 in the controller 400 is used to enable an audio connection of the user to the real world outside of the headset 200. This will offer more convenience to the user since usually a headset shields or lowers a user's hearing of sounds generated in the adjacent real world. Therefore, the microphone 402 adds the sounds of the real world adjacent to the headset 200 to the sounds of the technical world of wireless communication.

Further, the headset 200 comprises a detachable power source 406 for supplying the headset 200 with power. The controller 400 additionally comprises a re-chargeable power source (not shown) which usually supplies the real time clock (not shown) of the controller 400 with necessary power. The re-chargeable power source of the controller 400 can be re-charged by the detachable power source 406. If the controller 400 is detached from the headset 200 then the re-chargeable power source supplies power to the whole controller 400 for operation of the controller 400.

Each ear-directed side 407 of both earpiece housings of the headset 200 comprises a main speaker 408 and a secondary speaker 409. The main speaker 408 mainly emits sound waves with high frequencies and the secondary speaker 409 mainly emits sound waves with base frequencies. Therefore, the final audio signal is an admixture of the high frequency sound waves and of the base frequency sound waves. Both the main speaker 408 and the secondary speaker 409 are usually located adjacent to an ear of the user for emitting the audio signal directly to the ear of the user. Alternatively only the main speaker 408 with full audio frequency spectrum can be used. If the controller 400 is detachable from the headset 200 an interface (not shown) for a further short-range wireless communication network, which is different to the short-range wireless communication network between the headset 200 and any remote device, and an

appropriate integrated circuit (not shown) are incorporated in the earpieces of the headset 200 for transferring audio signals between the controller 400 and the speakers 408, 409.

The headset 200 is formed in such a way that can be comfortably worn by a user. Therefore, the headset 200 comprises a frame 410, which wraps around the ears and the back of the head of the user. This secures the position of the headset 200 even if the user is in active movement. Inside of the frame 410 cables (not shown) are available for electrically connecting both earpieces of the headset 200. Adjustment tabs 411 for adjusting the length of the frame 410 and its orientation can be conveniently adjusted and secured by the user to his/her own needs. It is obvious, that the position of the adjustment tabs 411 in the drawing is only descriptive. At one earpiece a retractable mouthpiece 412 comprising a microphone is provided for receiving the user's voice commands or conversation. Further, the retractable mouthpiece 412 can be installed with a sound channeling attachment (not shown) to facilitate "silent-mode" and "private" voice communications. Finally, a removable flash card memory 413 can be inserted into a designated opening of the controller 400 for extending the memory space inside the controller 400.

In **Figure 5** an overview over a headset 500 according to a further preferred embodiment of the invention is shown.

The headset 500 can be worn by a user around his/her neck during a walk or sports or the like and comprises a controller unit 501 which largely resembles the controller 400 according to the above embodiment. The controller unit 501 itself comprises a removable memory card (not shown), e.g. a memory-stick™ from Sony or a stamp-size MicroDrive™ from IBM, a wireless network interface (not shown), an optional display screen 502 for displaying a control menu which is used to control the headset 500, a rotatable and left/right/forward/backward pressable multifunctional control button 503 and single function control buttons 504 for navigating through the control menu as well as for changing settings in the control menu. Further, the headset 500 comprises a headset frame 505 which can take up various forms, which can be rigid or flexible, thin or thick, and which can be styled e.g. with jewelry-based designs.

The headset frame 505 comprises one or more frame tabs 506 for adjusting the length, the displacement and the orientation of the headset frame 505 as well as a battery (not shown). The position of the frame tabs 506 in Figure 5 is only illustrative. Further, the headset frame 505 comprises a quick-release hinge 507 to facilitate the user to put on or take off the headset 500 from his/her neck and frame openings 508 for preserving the earphones 509 as well as the connecting wires 510 between the earphones 509 and the controller unit 501 at times during which the headset 500 is not used. The connecting wires 510 can be retractable and are auto-locked after the user stopped pulling the earphones 509. Next to the frame openings 508 there is located an adjustment button (not shown) to allow an easy retraction as well as a further adjustment of the connecting wires 510 via the user.

Attached to one earphone 509 is a voice microphone 511 and a earphone hook 512 to additionally secure the earphone 509 at the ear of the user. Both earphones 509 comprise at least one environmental microphone 513 and each a small knob 514 on their outward facing surfaces which are not facing the ears of the user. The small knob 514 enables the user to insert or remove the earphone 509 easily into or from the frame openings 508, respectively. For details of the headset circuitry please contact the above description for Figure 1.

Figure 6 shows a headset being incorporated into a safety helmet 600 according to another embodiment of the invention.

The safety helmet 600 may be a helmet for instance for a motorcyclist or a pedal cyclist. The safety helmet 600 comprises a microphone 601, an environmental microphone 602, a right loudspeaker 603, the remaining headset circuitry 604 including an accumulator, and accumulator charger contacts 605. The wireless network interface of the headset can not be seen. The details of the remaining headset circuitry 604 are already described above with reference to Figure 1.

In this document, the following publications are cited:

[1] US 6,112,103 A;

[2] US 6,122,617 A;

[3] US 2001/0,003,542 A1;

[4] US 6,273,359 B1.

What is claimed is:

1. A headset (200; 500) for multifunctional usage comprising:
   - at least one speaker (110; 408, 409),
   - a microphone (111, 118; 402, 412; 511, 513),
   - a central processing unit (102) for processing binary data,
   - an audio processing unit (103) for processing an audio signal,
   - a memory device (105, 106, 107; 413),
   - a short-range wireless network interface (115, 116) for enabling a binary data communication of the headset (200; 500) with surrounding communication devices (203, 204; 302, 303, 304, 307, 308, 309), and
   - an extensible operating system executable in the central processing unit (102),
   - wherein the central processing unit (102) is connected to the audio processing unit (103), to the memory device (105, 106, 107; 413) and to the short-range wireless network interface (115, 116) for transferring the binary data, and wherein the audio processing unit (103) is connected to the microphone (111, 118; 402, 412; 511, 513) and to the at least one speaker (110; 408, 409) for transferring the audio signal.

2. The headset (200; 500) according to claim 1,
wherein the central processing unit (102) is arranged in such a manner, that it can recognize voice commands of a user (201; 301), and that it can control the headset (200; 500) via recognized voice commands.

3. The headset (200; 500) according to claim 1 or 2,
wherein the headset (200; 500) has the functions of a sound card and/or is arranged to work as an audio player, which is able to play music from binary audio data representing an audio signal, and wherein the binary audio data are saved in the memory device (106, 107) or transmitted during an audio communication via the short-range wireless network interface (115, 116) or via the wired communication connection.

4. The headset (200; 500) according to one of the claims 1 to 3, wherein the central processing unit (102) is arranged in such a manner, that it can be programmed with a functionality program for achieving further functional characteristics of the headset (200; 500).

5. The headset (200; 500) according to one of the claims 1 to 4, wherein the central processing unit (102) is a real-time central processing unit comprising a real-time clock and a separate power source for supplying power to the real-time clock.

6. The headset (200; 500) according to one of the claims 1 to 5, wherein the short-range wireless network interface (115, 116) connects the headset (200; 500) via a short-range wireless network communication with the surrounding communication devices (203, 204; 302, 303, 304, 307, 308, 309).

7. The headset (200; 500) according to one of the claims 1 to 6, wherein the headset (200; 500) is arranged to work as a mobile phone.

8. The headset (200; 500) according to one of the claims 1 to 7, comprising an interface (121) for an optional wired communication and/or power connection.

9. The headset (200; 500) according to one of the claims 1 to 8, wherein the central processing unit (102) and/or the audio processing unit (103) is/are arranged to manipulate binary audio data representing an audio signal.

10. The headset (200; 500) according to one of the claims 1 to 9, comprising an integrated power source (104; 406).

11. The headset (200; 500) according to one of the claims 1 to 10, wherein the at least one speaker (110; 408, 409) and/or the microphone (111; 402; 513) are/is incorporated in an earpiece of the headset (200; 500).

12. The headset (200; 500) according to one of the claims 1 to 11, comprising a docking station (121) with at least one interface for an optional wired or infrared communication connection to a computer and/or an interface for re-charging an integrated power source (104) if the integrated power source (104) is a re-chargeable type.

13. A safety helmet (600) comprising the headset (200) according to one of the claims 1 to 12.

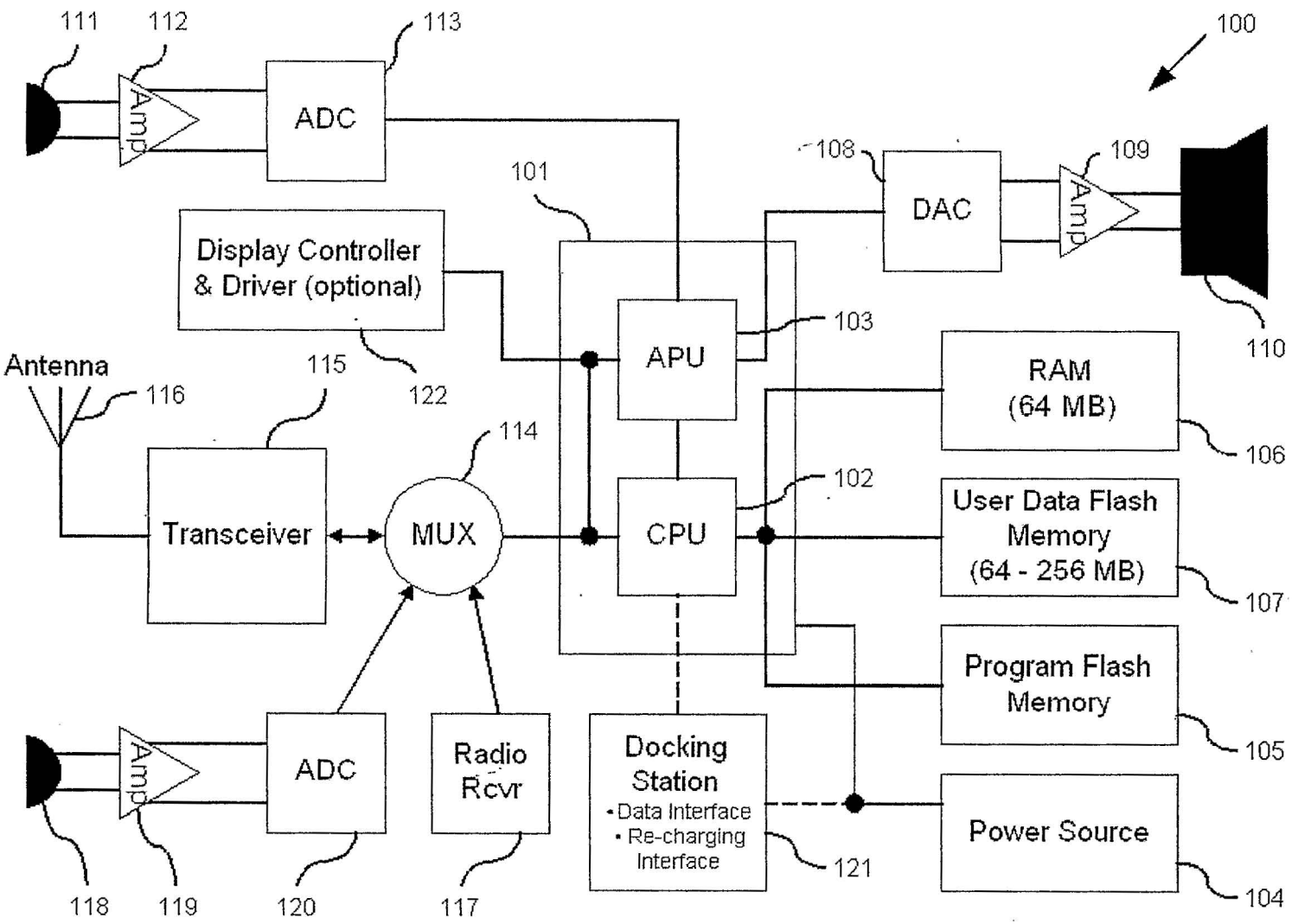
100
111
112
113
Amp
ADC
101
108
DAC
109
Amp
110
Display Controller
& Driver (optional)
122
APU
103
Antenna
116
115
114
RAM
(64 MB)
106
Transceiver
MUX
CPU
102
User Data Flash
Memory
(64 - 256 MB)
107
Program Flash
Memory
105
Amp
ADC
Radio
Rcvr
Docking
Station
• Data Interface
• Re-charging
Interface
121
Power Source
104
118
119
120
117

Figure 1

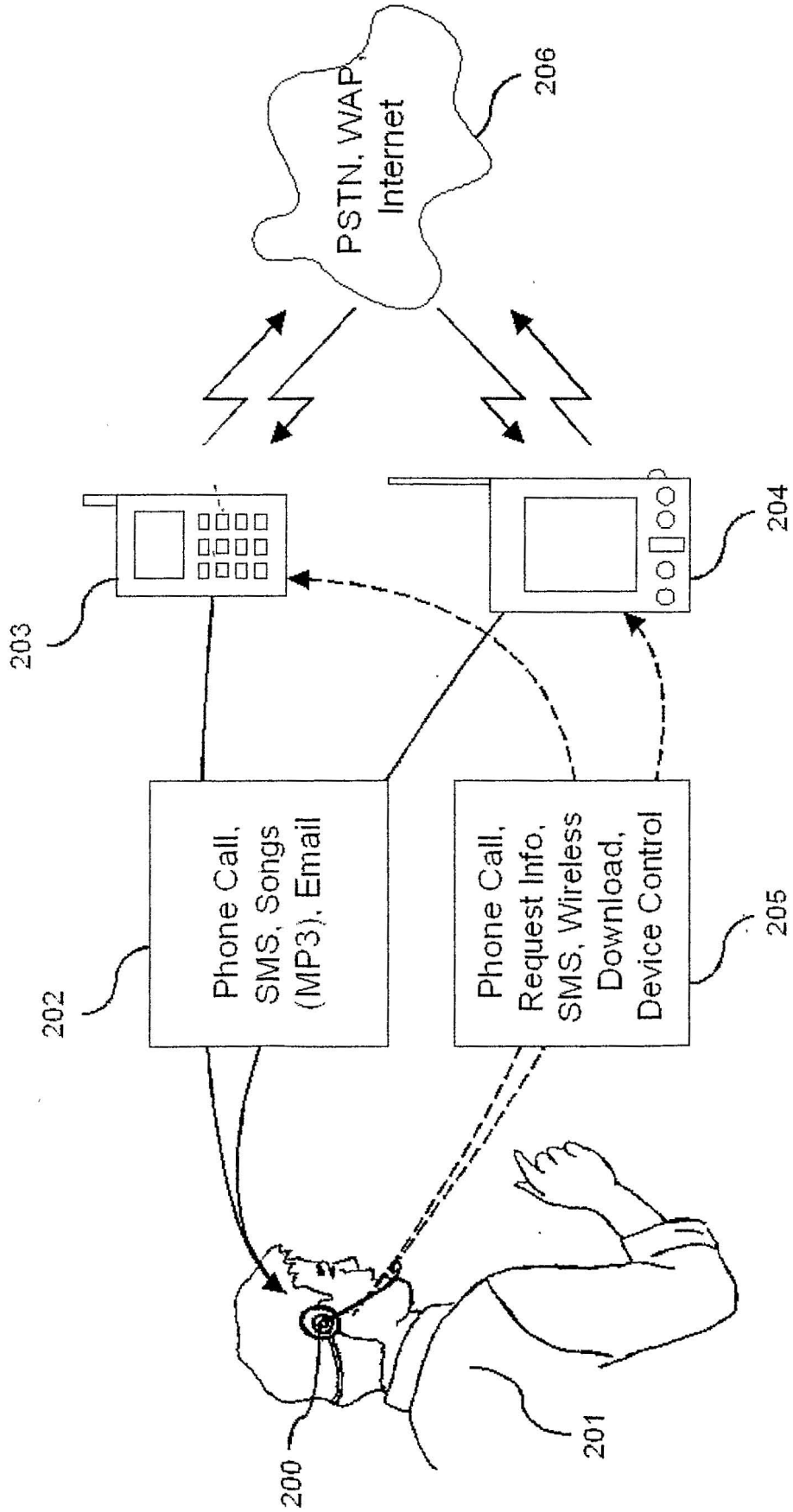
PSTN, WAP,
Internet
206
203
204
Phone Call,
SMS, Songs
(MP3), Email
202
Phone Call,
Request Info,
SMS, Wireless
Download,
Device Control
205
200
201

Figure 2

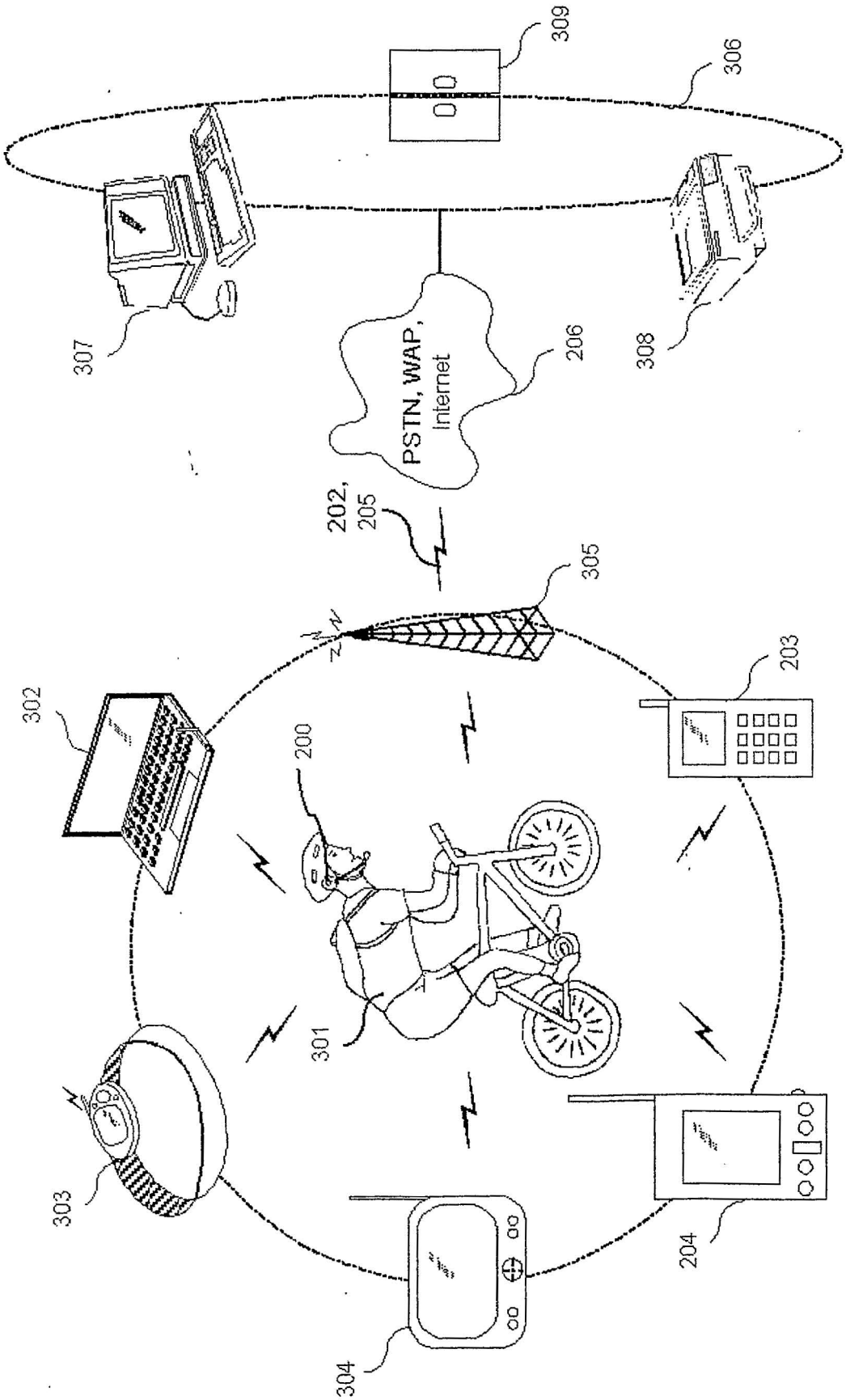
309
306
307
308
PSTN, WAP,
Internet
206
202,
205
305
302
200
203
301
303
204
304

Figure 3

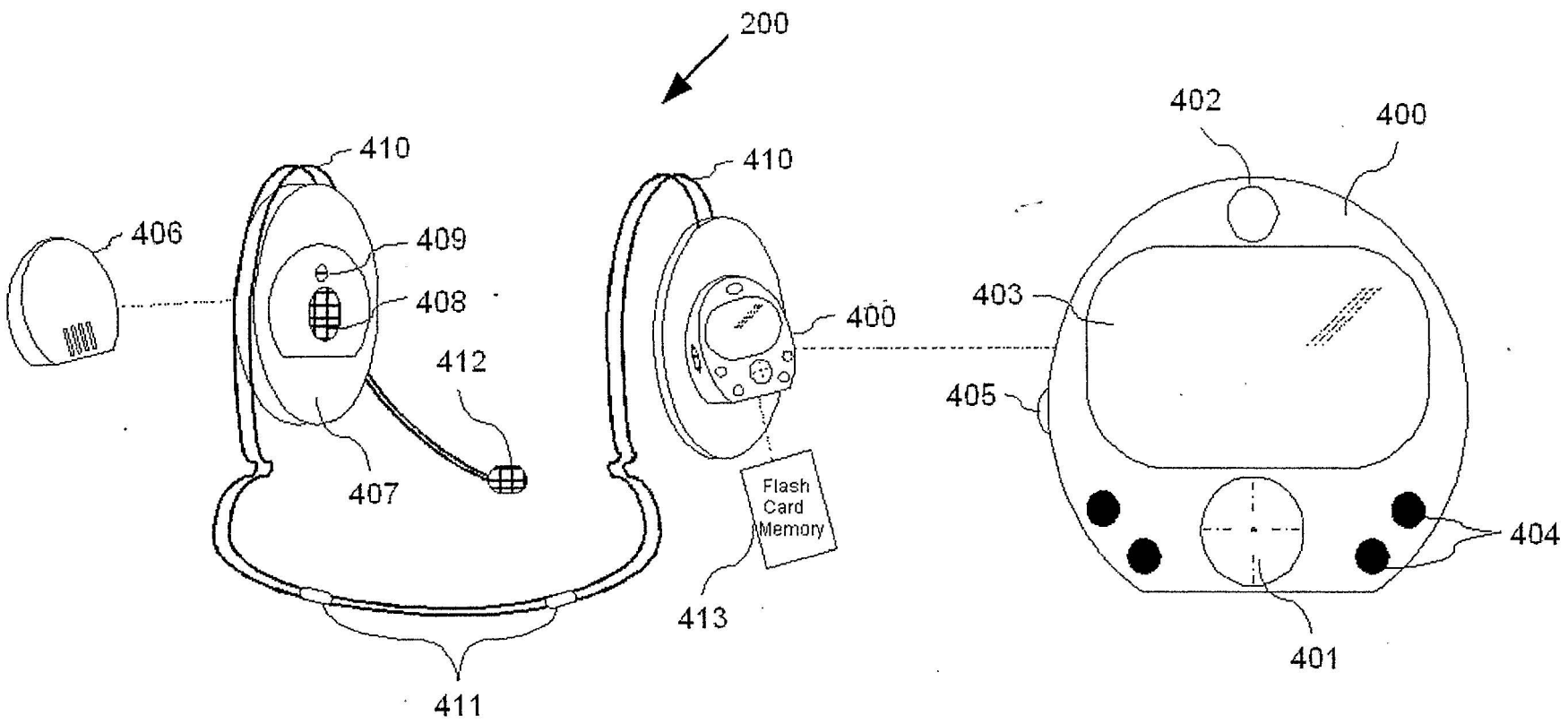
200
410
410
406
409
408
412
407
411
400
Flash
Card
Memory
413
402
400
403
405
404
401

Figure 4

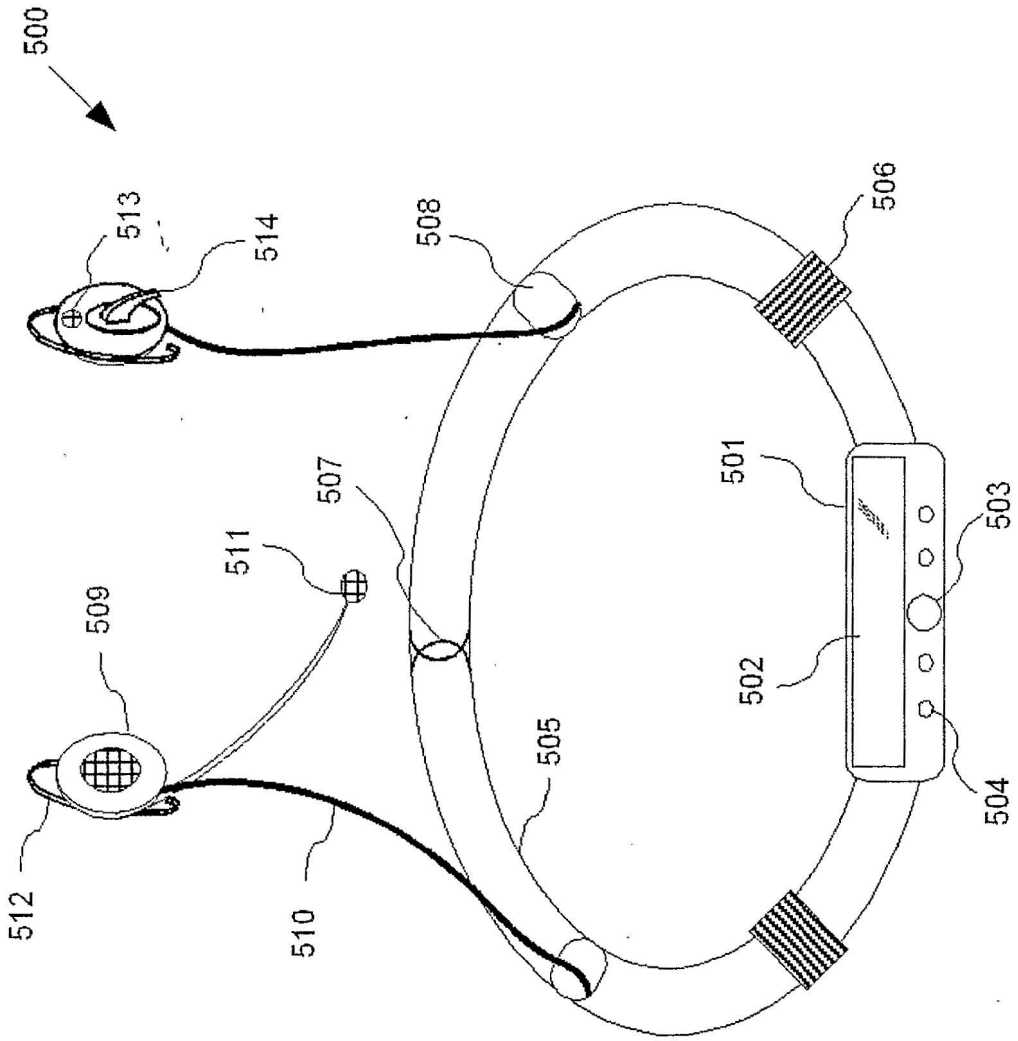

Figure 5

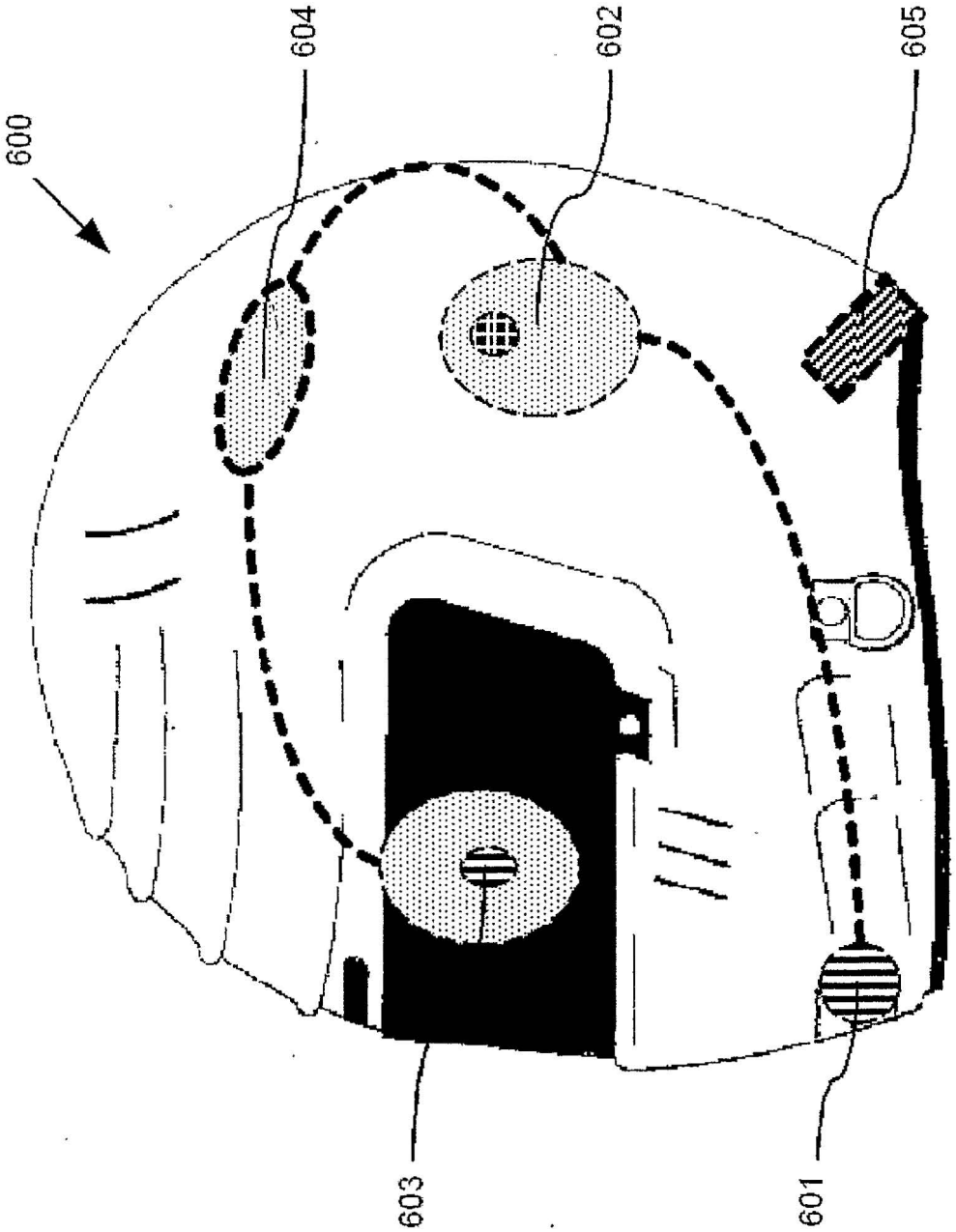

Figure 6

INTERNATIONAL SEARCH REPORT

International Application No
PCT/SG 02/00001

A. CLASSIFICATION OF SUBJECT MATTER
IPC 7 H04M1/60 H04M1/725

According to International Patent Classification (IPC) or to both national classification and IPC

B. FIELDS SEARCHED

Minimum documentation searched (classification system followed by classification symbols)
IPC 7 H04M

Documentation searched other than minimum documentation to the extent that such documents are included in the fields searched

Electronic data base consulted during the international search (name of data base and, where practical, search terms used)

EPO-Internal, WPI Data, PAJ

C. DOCUMENTS CONSIDERED TO BE RELEVANT

Category °	Citation of document, with indication, where appropriate, of the relevant passages	Relevant to claim No.
X	FR 2 806 238 A (SAGEM) 14 September 2001 (2001-09-14) the whole document	1-4,6-11
Y	---	12,13
X	EP 1 161 064 A (NOKIA MOBILE PHONES LTD) 5 December 2001 (2001-12-05) abstract; figure 2 column 1, line 49 -column 5, line 4; figure 3	1,3,4,6, 7,9-11

X	US 6 144 748 A (KERNS ROBERT Q) 7 November 2000 (2000-11-07) abstract; figure 2 column 1, line 32 - line 49 column 2, line 63 -column 3, line 39 column 4, line 25 - line 32	1-3,6,7, 9-11
A	---	5
	-/--	

[X] Further documents are listed in the continuation of box C.

[X] Patent family members are listed in annex.

° Special categories of cited documents :

"A" document defining the general state of the art which is not considered to be of particular relevance

"E" earlier document but published on or after the international filing date

"L" document which may throw doubts on priority claim(s) or which is cited to establish the publication date of another citation or other special reason (as specified)

"O" document referring to an oral disclosure, use, exhibition or other means

"P" document published prior to the international filing date but later than the priority date claimed

"T" later document published after the international filing date or priority date and not in conflict with the application but cited to understand the principle or theory underlying the invention

"X" document of particular relevance; the claimed invention cannot be considered novel or cannot be considered to involve an inventive step when the document is taken alone

"Y" document of particular relevance; the claimed invention cannot be considered to involve an inventive step when the document is combined with one or more other such documents, such combination being obvious to a person skilled in the art.

"&" document member of the same patent family

Date of the actual completion of the international search	Date of mailing of the international search report
17 September 2002	26/09/2002

Name and mailing address of the ISA	Authorized officer
European Patent Office, P.B. 5818 Patentlaan 2 NL – 2280 HV Rijswijk Tel. (+31-70) 340-2040, Tx. 31 651 epo nl, Fax: (+31-70) 340-3016	Pascual Vallés, E

Form PCT/ISA/210 (second sheet) (July 1992)

INTERNATIONAL SEARCH REPORT

International Application No
PCT/SG 02/00001

C.(Continuation) DOCUMENTS CONSIDERED TO BE RELEVANT

Category °	Citation of document, with indication,where appropriate, of the relevant passages	Relevant to claim No.
X	US 2002/002035 A1 (CHO DONG-JUN ET AL) 3 January 2002 (2002-01-03) paragraph '0007! - paragraph '0008!; figures 1,2 paragraph '0012! paragraph '0034! - paragraph '0036! ---	1,3,6,9
Y	US 5 113 428 A (FITZGERALD ROBERT) 12 May 1992 (1992-05-12) column 4, line 25 - line 30; figure 4 ---	12
Y	US 5 615 410 A (DEMARS ROBERT A) 25 March 1997 (1997-03-25) abstract; figure 1 column 1, line 47 - line 60 -----	13

Form PCT/ISA/210 (continuation of second sheet) (July 1992)

INTERNATIONAL SEARCH REPORT

International Application No
PCT/SG 02/00001

Patent document cited in search report		Publication date	Patent family member(s)			Publication date
FR 2806238	A	14-09-2001	FR	2806238	A1	14-09-2001
EP 1161064	A	05-12-2001	FI	20001274	A	27-11-2001
			EP	1161064	A2	05-12-2001
			US	2001049262	A1	06-12-2001
US 6144748	A	07-11-2000	EP	0974245	A2	26-01-2000
			WO	9844761	A2	08-10-1998
US 2002002035	A1	03-01-2002	CN	1333603	A	30-01-2002
			EP	1176783	A2	30-01-2002
US 5113428	A	12-05-1992	NONE			
US 5615410	A	25-03-1997	NONE			