(12) INTERNATIONAL APPLICATION PUBLISHED UNDER THE PATENT COOPERATION TREATY (PCT)

(19) World Intellectual Property Organization
International Bureau

(43) International Publication Date
16 May 2002 (16.05.2002)

PCT

(10) International Publication Number
WO 02/39600 A2

(51) International Patent Classification[7]: H04B 1/00

(21) International Application Number: PCT/CA01/01582

(22) International Filing Date:
6 November 2001 (06.11.2001)

(25) Filing Language: English

(26) Publication Language: English

(30) Priority Data:
60/246,533 7 November 2000 (07.11.2000) US

(71) Applicant *(for all designated States except US)*: **RESEARCH IN MOTION LIMITED** [CA/CA]; 295 Phillip STreet, Waterloo, Ontario N2L 3W8 (CA).

(72) Inventors; and
(75) Inventors/Applicants *(for US only)*: **GRIFFIN, Jason, T.** [US/CA]; 522 Cairncroft Place, Waterloo, Ontario N2T 2J5 (CA). **LAZARIDIS, Mihal** [CA/CA]; 263 Carrington Place, Waterloo, Ontario N2T 2K1 (CA). **INFANTI, James, C.** [CA/CA]; 395 Kingscourt Dr. -Unit#4, Waterloo, Ontario N2K 3R4 (CA). **EDMONSON, Peter, J.** [CA/CA]; 138 Stone Church Road East, Hamilton, Ontario L9B 1A9 (CA).

(74) Agent: **PATHIYAL, Krishna, K.**; Research In Motion Limited, 295 Phillip Street, Waterloo, Ontario N2L 3W8 (CA).

(81) Designated States *(national)*: AE, AG, AL, AM, AT, AU, AZ, BA, BB, BG, BR, BY, BZ, CA, CH, CN, CO, CR, CU, CZ, DE, DK, DM, DZ, EC, EE, ES, FI, GB, GD, GE, GH, GM, HR, HU, ID, IL, IN, IS, JP, KE, KG, KP, KR, KZ, LC, LK, LR, LS, LT, LU, LV, MA, MD, MG, MK, MN, MW, MX, MZ, NO, NZ, PL, PT, RO, RU, SD, SE, SG, SI, SK, SL, TJ, TM, TR, TT, TZ, UA, UG, US, UZ, VN, YU, ZA, ZW.

(84) Designated States *(regional)*: ARIPO patent (GH, GM, KE, LS, MW, MZ, SD, SL, SZ, TZ, UG, ZW), Eurasian patent (AM, AZ, BY, KG, KZ, MD, RU, TJ, TM), European patent (AT, BE, CH, CY, DE, DK, ES, FI, FR, GB, GR, IE, IT, LU, MC, NL, PT, SE, TR), OAPI patent (BF, BJ, CF,

[Continued on next page]

(54) Title: COMMUNICATION DEVICE WITH MULTIPLE DETACHABLE COMMUNICATION MODULES

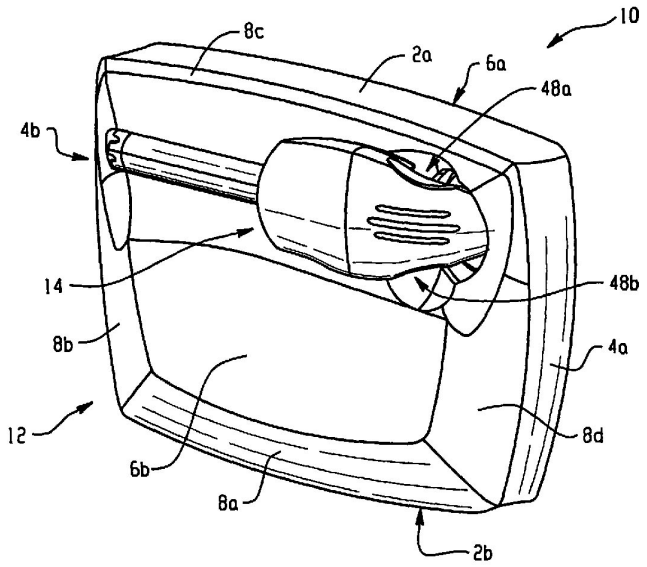

(57) Abstract: A communication device having multiple detachable communication modules includes a first communication module and a second communication module. The first communication module is configured to receive RF signals from a wireless network. The second communication module may be physically attached to the first communication module and is coupled to the first communication module by a wireless link. The second communication module is configured to receive the RF signals from the first communication module over the wireless link and to convert the RF signals into an audible signal. In addition, the second communication module is physically dimensioned so that it may be fitted into or onto an ear of a communication device user.

WO 02/39600 A2

Bose Exhibit 1008
Bose v. IngenioSpec

CG, CI, CM, GA, GN, GQ, GW, ML, MR, NE, SN, TD, TG).

Declarations under Rule 4.17:

— *as to applicant's entitlement to apply for and be granted a patent (Rule 4.17(ii)) for the following designations AE, AG, AL, AM, AT, AU, AZ, BA, BB, BG, BR, BY, BZ, CA, CH, CN, CO, CR, CU, CZ, DE, DK, DM, DZ, EC, EE, ES, FI, GB, GD, GE, GH, GM, HR, HU, ID, IL, IN, IS, JP, KE, KG, KP, KR, KZ, LC, LK, LR, LS, LT, LU, LV, MA, MD, MG, MK, MN, MW, MX, MZ, NO, NZ, PL, PT, RO, RU, SD, SE, SG, SI, SK, SL, TJ, TM, TR, TT, TZ, UA, UG, UZ, VN, YU, ZA, ZW, ARIPO patent (GH, GM, KE, LS, MW, MZ, SD, SL, SZ, TZ, UG, ZW), Eurasian patent (AM, AZ, BY, KG, KZ, MD, RU, TJ, TM), European patent (AT, BE, CH, CY, DE, DK, ES, FI, FR, GB, GR, IE, IT, LU, MC, NL, PT, SE, TR), OAPI patent (BF, BJ, CF, CG, CI, CM, GA, GN, GQ, GW, ML, MR, NE, SN, TD, TG)*

— *as to the applicant's entitlement to claim the priority of the earlier application (Rule 4.17(iii)) for the following designations AE, AG, AL, AM, AT, AU, AZ, BA, BB, BG, BR, BY, BZ, CA, CH, CN, CO, CR, CU, CZ, DE, DK, DM, DZ, EC, EE, ES, FI, GB, GD, GE, GH, GM, HR, HU, ID, IL, IN, IS, JP, KE, KG, KP, KR, KZ, LC, LK, LR, LS, LT, LU, LV, MA, MD, MG, MK, MN, MW, MX, MZ, NO, NZ, PL, PT, RO, RU, SD, SE, SG, SI, SK, SL, TJ, TM, TR, TT, TZ, UA, UG, UZ, VN, YU, ZA, ZW, ARIPO patent (GH, GM, KE, LS, MW, MZ, SD, SL, SZ, TZ, UG, ZW), Eurasian patent (AM, AZ, BY, KG, KZ, MD, RU, TJ, TM), European patent (AT, BE, CH, CY, DE, DK, ES, FI, FR, GB, GR, IE, IT, LU, MC, NL, PT, SE, TR), OAPI patent (BF, BJ, CF, CG, CI, CM, GA, GN, GQ, GW, ML, MR, NE, SN, TD, TG)*

— *of inventorship (Rule 4.17(iv)) for US only*

Published:

— *without international search report and to be republished upon receipt of that report*

For two-letter codes and other abbreviations, refer to the "Guidance Notes on Codes and Abbreviations" appearing at the beginning of each regular issue of the PCT Gazette.

Communication Device With Multiple Detachable Communication Modules

CROSS-REFERENCE TO RELATED APPLICATION

This application claims priority from and is related to the following prior application: "Communication Device With Multiple Detachable Communication Modules," United States Provisional Application No. 60/246,533, filed November 7, 2000. This prior application, including the entire written description and drawing figures, is hereby incorporated into the present application by reference.

BACKGROUND

1. FIELD OF THE INVENTION

This invention relates to communication devices in general, and particularly to wireless communication devices having multiple detachable communication modules.

2. DESCRIPTION OF THE RELATED ART

There has been a proliferation of wireless mobile communication devices in recent years in the field of telecommunications. Devices such as cordless and cellular telephones, pagers, wireless modems, wireless email devices, personal digital assistants (PDAs) with communications functions, and other mobile communication devices are becoming commonplace. Known communication devices, however, are typically single-element or single-module designs. In order to enable hands-free operation of such single-module communication devices, specialized additional equipment is typically required. For example, a wired headset is often available for known communication devices that typically connects to the communication device through an electrical jack or plug. Another common hands-free

accessory available for cellular telephones is a docking cradle, which is typically intending for mounting the communication device in a vehicle.

SUMMARY

A communication device having multiple detachable communication modules includes a first communication module and a second communication module. The first communication module is configured to receive RF signals from a wireless network. The second communication module may be physically attached to the first communication module and is coupled to the first communication module by a wireless link. The second communication module is configured to receive the RF signals from the first communication module over the wireless link and to convert the RF signals into an audible signal. In addition, the second communication module is physically dimensioned so that it may be fitted into or onto an ear of a communication device user.

BRIEF DESCRIPTION OF THE DRAWINGS

Fig. 1 is a bottom perspective view of an exemplary communication device having a first communication module and a second detachable communication module for insertion into the communication device user's ear;

Fig. 2 is another bottom perspective view of the exemplary communication device shown in Fig. 1, in which the second communication module has been removed from the first communication module;

Fig. 3 provides a more detailed view of the cavity in the housing of the first communication module;

Fig. 4 is a top perspective view of the second communication module shown in Figs. 1 and 2;

Fig 5 is a bottom perspective view of the second communication module that shows additional exemplary features, including a power switch and charging terminals;

Fig. 6 is a bottom perspective view of the communication device showing operative-mode connection terminals on the second communication module;

Fig. 7 is a bottom perspective view of the first communication module showing both operative-mode connection terminals and inoperative-mode connection terminals;

Fig. 8 is a bottom perspective view of the second communication module showing inoperative-mode connection terminals;

Fig. 9 is a bottom perspective view of the first communication module showing the multifunctional connection terminals;

Fig. 10 is a bottom perspective view of the second communication module showing a set of charging terminals;

Fig. 11 is a bottom perspective view of an exemplary communication device having a first and second communication module, in which the first communication module includes a protective movable door;

Fig. 12 shows a movable door that is molded or otherwise worked to bear an emblem, a logo, a user identifier or the like;

Fig. 13 shows another exemplary communication device in which a first communication module includes a substantially enclosed cavity into which a second communication module is mounted;

Figs. 14a and 14b respectively show exemplary embodiments in which the first communication module is a cellular telephone and a laptop computer or PDA;

Fig. 15a shows a top perspective view of an alternative second communication module;

Fig. 15b shows a side perspective view of the alternative second communication module;

FIG. 16 is an exemplary electrical block diagram of the multi-module communication devices shown in FIGs. 1-15;

Fig. 17 illustrates one contemplated implementation of the communication device described above;

Fig. 18 illustrates a further embodiment of a communication device that includes wireless communication between the device modules and a third module, such as an RF interface cradle; and

Fig. 18a is a more detailed illustration of the third module shown in Fig. 18.

DETAILED DESCRIPTION

Referring now to the drawing figures, Fig. 1 is a bottom perspective view of an exemplary communication device 10 having a first communication module 12 and a second detachable communication module 14 for insertion into the communication device user's ear. The first communication module 12 includes a housing with substantially parallel and planar opposite top and bottom walls 2a and 2b, substantially parallel and planar opposite side walls 4a and 4b, and substantially parallel and planar opposite front and back walls 6a and 6b. The back wall 6b preferably includes bevelled surfaces 8a-8d located along the edges where the back wall 6b adjoins the top, bottom and side walls 2a, 2b, 4a and 4b, but may also be planar, joining the top, bottom and side walls 2a, 2b, 4a and 4b at substantially right angles. The top wall 2a, bottom wall 2b and side walls 4a and 4b are preferably slightly curved, but may also be planar. The specific shapes of the housing walls are dependent upon the requirements of the first communication module 12, as will become apparent from the following description.

Fig. 2 is another bottom perspective view of the exemplary communication device 10 shown in Fig. 1, in which the second communication module 14 has been removed from the first communication module 12. The housing of the first communication module 12 preferably includes a cavity 16 in which the second communication module may be detachably mounted.

Fig. 3 provides a more detailed view of the cavity 16 in the housing of the first communication module 12. The cavity 16 preferably includes a plurality of subcavities that are shaped to accommodate the second communication module 12, each of which may be a different size, shape and depth. For instance, the exemplary cavity shown in Fig. 3 includes three subcavities: a substantially circular subcavity 18 having a first depth, a first rectangular cavity 20 having a second depth, and a second rectangular cavity 22 having a third depth. The cavity 16 also preferably includes a plurality of surfaces 24, 26b, 28 and 30 that provide smooth transitions between the subcavities 18, 20 and 22, and a plurality of surfaces 26a, 26c, 32, 34, 36a, 36b, 38, 40, 42, 44, 46a and 46b that are preferably contoured and sized primarily to produce a desired physical appearance when the second communication module 14 is mounted as in Fig. 1.

The surfaces of the cavity 16 preferably also provide for retention of the second communication module 14 within the cavity 16. Surfaces 36a and 36b and/or surfaces 46a and 46b may, for example, be contoured to engage the sides of the second communication module 14 in order to frictionally hold it within the cavity 16. In another embodiment, surfaces in or adjacent to the cavity 16 may include retention means, such as nubs or protrusions, that engage detents in corresponding parts of the second communication module 14, or vice versa, to detachably hold the second communication module 14 within the cavity 16. In yet another embodiment, other retention means, such as springs or otherwise elastically-biased protrusions or hooks, may be included on the first or second

communication module that cooperate with appropriate mating retention means on the other of the first or second communication module. Alternatively, additional means to maintain the device in an assembled position, such as a movable clip arrangement, could be mounted on the first communication module 12.

In order to remove the second communication module 14 from the cavity 16, the surfaces 26a, 26b and 26c are preferably contoured to provide spaces 48a and 48b (shown in Fig. 1) that enable a communication device user to grasp the sides of the second communication module 14. In addition, the second communication module 14 preferably includes depressions 50 and 52 (shown in Figs. 4 and 5) that enable the communication device user to easily grip the module 14 while it is within the cavity 16. Preferably, the retention means described above are adapted to apply sufficient force to retain the second communication module 14 in a mounted position, while allowing a communication device user to easily remove the second communication module 14 for use.

Fig. 4 is a top perspective view of the second communication module 14 shown in Figs. 1 and 2. The second communication module 14 is preferably a voice communication device that includes a speaker 14a, a main body 14b, a boom 14c and a microphone 14d. Operationally, the speaker 14a is placed in the ear of a communication device user with the boom 14c extending towards the user's mouth. To avoid rotational movement of the second communication module 14 while the speaker 14a is in the user's ear, the center of gravity of the module 14 should preferably be as close to the speaker 14a as possible. Thus, any relatively heavy components located inside the main body portion 14b should preferably be located adjacent the speaker 14a. In this manner, moments about the speaker are minimized, and the second communication module 14 should remain substantially stationary while the speaker is in the communication device user's ear.

Optimally, the length of the boom portion 14c should be maximized such that the microphone 14d is located in the proximity of the communication device user's mouth when the module 14 is in use. The moment about the speaker 14a, however, increases in proportion to the length of the boom 14c. Thus, in order to maintain stability, the length of the boom 14c may not be sufficient to position the microphone 14d adjacent to a user's mouth. The microphone 14d will, therefore, likely receive not only a user's speech, but also undesired noise signals from a multitude of sources, such as other speakers in the vicinity or car engine noise. In order to reduce this background noise, the second communication module preferably includes a noise cancellation circuit with a background noise microphone 48 as shown in Fig. 4. The background noise microphone 48 preferably detects background noise signals which are then subtracted from the corrupted speech received by the microphone 14d in the noise cancellation circuit. In this manner, a higher quality speech signal is provided.

Fig 5 is a bottom perspective view of the second communication module 14 that shows additional exemplary features, including a power switch 54 and charging terminals 56. The power switch 54 is preferably a pushbutton switch that turns the second communication module 14 on and off, enabling the communication device user to limit power consumption while the module 14 is not in use. In a preferred embodiment, the second communication module 14 is also configured to turn on automatically when removed from its assembled position within the first communication module 12, and to turn off automatically when replaced in its mounted position. In this preferred embodiment, the power switch 54 may be used to turn off the second communication module 13 without returning it to its mounted position. In other embodiments, the second communication module 14 may also include other switched functions, such as a mute function, controlled by one or more additional switches located on the first and/or second module. For example, a mute function may

operate to disable the microphone 14d and the background noise microphone 48 without ending a communication function such as a voice call.

The charging terminals 56 on the second communication module 14 preferably mate with corresponding charging terminals 46 on the first communication module 12 shown in Fig. 3. Also shown in Figs. 3 and 5 are alternative locations 46a and 56a for the respective charging terminals. The second communication module 14 preferably includes a rechargeable power source that is recharged by the first communication module 12 through the charging terminals 46 and 56 while the second communication module is in its fully mounted position as shown in Fig. 1. The charging terminals 46 on the first communication module 12 are preferably coupled to an internal power source through appropriate conversion and control circuitry in order to provide a charge to an additional power source in the second communication module.

In addition, the charging terminals 46 and 56 preferably include appropriate structures or arrangements to prevent discharging of the respective power sources or damage to internal components caused by external contact with the terminals. For example, the charging terminals 56 may be recessed below the surface of the main body 14b of the second communication module 14 in order to reduce the likelihood of external contact with the charging terminals 56, resulting in a short-circuit. In such an embodiment, the charging terminals 46 on the first communication module 12 may protrude from the surface 26b in order to make contact with recessed charging terminals 56 in the second communication module 14.

With reference to Fig. 3, the first communication module 12 may include either a non-rechargeable power source such as one or more alkaline batteries, or a rechargeable source. In devices where the first communication module 12 includes a rechargeable power supply, the power supply is preferably recharged through an operative connection to a recharging

device, such as a cradle or holding unit. The device 10 could also be adapted to receive a connector jack or plug from a more common wall-mounted type charger device.

With reference again to Fig. 5, the second communication module 14 preferably includes a rechargeable power source that is charged through the recharging terminals 46 and 56 described above. It should be understood, however, that the second communication module 14 may alternatively include a single use power source, such as a non-rechargeable battery, making charging terminals 46 and 56 unnecessary

Figs. 6-8 show an alternative communication device 60 embodiment in which a second communication module 64 may be mounted to a first communication module 62 in either an operative or inoperative position. Fig. 6 is a bottom perspective view of the communication device 60 showing operative-mode connection terminals 66 on the second communication module 64. Fig. 7 is a bottom perspective view of the first communication module 62 showing both operative-mode connection terminals 68 and inoperative-mode connection terminals 46. Fig. 8 is a bottom perspective view of the second communication module 64 showing inoperative-mode connection terminals 56.

When the second communication module 64 is mounted in an inoperative assembled position, the inoperative-mode terminals 46 in the first communication module 62 are electrically connected with the inoperative-mode terminals 56 on a front wall 64b of the second communication module 64, as shown in Fig. 8. In the inoperative assembled position, the inoperative-mode terminals 46 and 56 preferably operate as described above to charge a power source in the second communication module 64.

When the second communication module 64 is mounted in an operative assembled position, the operative-mode connection terminals 68 in the cavity of the first communication module 62, shown in Fig. 7, are electrically connected with the operative-mode connection terminals 66 on a back wall of a main body portion of the second communication module 64

shown in Fig. 6. In this operative assembled position, the speaker 64a and microphone 64d, shown in Fig. 8 face away from the cavity and are accessible for use by a user of the communication device. In addition, the operative-mode terminals 66 and 68 provide for simultaneous charging and use of the second communication module 64. For instance, the operative-mode terminals 66 and 68 may provide for operation of the second communication module 64 from the power source of the first communication module 62, while simultaneously charging the power source of the second communication module 64. The operative assembled position of the second communication module 64 thus provides for use of the second communication module 64 when its power source is incapable of supplying sufficient power, and thereby avoids recharge down time.

Any of the retaining means discussed above could be used to mount the second module 64 in the operative position. For example, a friction fit between the main body 64b of the second communication module 64 and the corresponding cavity in the first communication module 62 will preferably retain the second module 64 in its assembled inoperative position. The main body 64b, or at least a part thereof, could then be fabricated such that the back portion, in which terminals 66 are positioned, and the front portion are substantially symmetric. The second communication module 64 may then be retained in either its operative or inoperative assembled position within the cavity in the first communication module 62. A similar arrangement could alternatively be implemented based on friction fit retention of the boom portion 64c of the second communication module 64.

Figs. 9 and 10 show another embodiment 61 of a communication device in which a second communication module 65 may be mounted to a first communication module 63 in either an operative or inoperative position, and the first communication module 63 utilizes only one set of multifunctional connection terminals 67. Fig. 9 is a bottom perspective view of the first communication module 63 showing the multifunctional connection terminals 67.

Fig. 10 is a bottom perspective view of the second communication module showing a set of charging terminals 69. One function of the connection terminals 67 on the first communication module 63 may be to cooperate with the charging terminals 69 positioned on the second communication module 65 in order to supply power to a rechargeable power source in the second communication module 65 while it is mounted in the inoperative position. In addition, the multifunctional connection terminals 67 may also contact a second set of terminals on the top face of the second communication module 65 (as shown in Fig. 6) when the second communication module 65 is mounted in its operative assembled position. The multifunctional connection terminals 67 may then provide for simultaneous charging and use of the second communication module 65 while it is mounted in its operative position.

Fig. 11 is a bottom perspective view of an exemplary communication device 70 having a first and second communication module 72 and 74, in which the first communication module includes a protective movable door 76. The protective movable door 76 is preferably fabricated from the same or similar material as the housing of the first communication module 72, and is positioned on a surface adjacent the cavity in which the second communication module 74 is mounted in its inoperative assembled position. The door 76 is normally in a closed position protecting the second communication module 74 and connection terminals 78 (if present), and is movable to allow detachment of the second communication module 74 from the first communication module 72. Then, when the second communication module 74 is detached from the first communication module 72, the door 76 may be moved to its closed position to substantially cover the cavity 80 in the first communication module 72.

The door 76 may be attached to the first communication module 72 through any appropriate hinge arrangement, and is preferably biased toward its open and closed positions. For instance, if an over-center spring or elastic biasing hinge arrangement is utilized, the door

76 is preferably biased toward its open position when the door 76 is opened beyond some point in its range of motion, and is otherwise biased toward its closed position. In addition, the door 76 may also include a fastening means or locking mechanism for maintaining the door in its closed position. Other specific ranges of motion are also contemplated in accordance with this aspect of the invention, including but not limited to a downwardly or sideways swinging door or a similar sliding door or covering panel.

Although intended primarily for protecting the second module 74 when it is mounted on the first module 72, the door 76 may also serve a decorative purpose. If fabricated from the same material as the housing of the first module 72, which is typically opaque, the door may, for example, be molded or otherwise worked to bear an emblem, a logo, a user identifier or the like, as shown at 79 in Fig. 12. Alternatively, the door 76 may be fabricated from a transparent material and adapted to receive a decorative member such as a photograph, allowing a user to customize the appearance of the communication device according to personal taste and preference.

Fig. 13 shows another exemplary communication device 80 in which a first communication module 82 includes a substantially enclosed cavity 86 into which a second communication module 84 is mounted. Preferably, the second communication module 84 is mounted by sliding it into the cavity 86 in a direction indicated by the dotted line 94. The first communication module 82 and second communication module 84 preferably include suitable retaining means for removably holding the second communication module 84 within the cavity 86.

The communication modules 82 and 84 may be adapted for operation in accordance with any of the embodiments described above. For instance, if the device 80 provides for an operative assembled position of the second communication module 13, then an opening 92, preferably comprising a series of slits as shown in Fig. 13, may be provided at an appropriate

position in a wall of the housing of first communication module 82. Preferably, the slits are positioned to correspond to the position of a microphone 84d when the second communication module 84 is in its operative assembled position. Depending on the particular operative assembled position of the second communication module 84, a further opening similar to opening 92 could be provided for a speaker 84a. Alternatively, the operative assembled position could be designed such that the speaker 84a remains outside the cavity 86.

In addition, a set of contact terminals 88 on the second communication module 84 may cooperate with suitably located terminals inside cavity 86 to provide for recharging of a power source in the second module 84 and/or powering the second module 84 from the power source in the first module 82. In an alternative embodiment, a set of female terminals 90 may be located at a bottom edge of the main body 84b of the second communication module 84 that engage and electrically connect to corresponding male terminals inside the cavity 86.

Each of the above exemplary embodiments include a general first communication module. This first communication module may, for example be a handheld electronic device as disclosed in United States Patent Application No. 09/106,585, which is hereby incorporated into the present Application by reference. It should be understood, however, that the first communication module is not limited to such a handheld electronic device. For instance, Figs. 14a and 14b respectively show exemplary embodiments 100 and 110 in which the first communication module is a cellular telephone 102 and a laptop computer or PDA 112. In Fig. 14a, a second communication module 104 is removably assembled in a cavity 106 in the cellular telephone 102. Similarly, the laptop computer or PDA 112 shown in Fig. 14b includes a mounting location 116 in which a second communication module 114 may be attached. Any of the above terminal and mounting arrangements, including, for example, a

protective door or an enclosed cavity in which the second communication modules 104 or 114 would be slidably mounted, are also contemplated for the devices 100 and 110.

Figs. 15a and 15b show one alternative design 120 for the second communication module. Fig. 15a shows a top perspective view of the alternative second communication module 120. Fig. 15b shows a side perspective view of the alternative second communication module 120. The alternative communication module 120 preferably includes a housing 128, a speaker 120a, a microphone 120d and a switch 126. The housing 121 preferably includes a substantially oval-shaped top profile, and indentations 122 and 124 that define handles by which a user may grasp and hold the second communication module 120. In addition, the housing 121 preferably has a main body portion with two sections: an upper section 120b that lies substantially to one side of the speaker 120a; and a lower section 120c that lies substantially on the opposite side of the speaker 120a. The microphone 120d is preferably located at a distal end of the lower section 120c. The switch 126 is preferably located on a top portion of the housing 121 and operates similarly to the switch 54 shown in Fig. 5. The module may also include an additional microphone adapted to receive background noise for use in executing noise cancellation operations for the desired but corrupted voice or audio signals received at microphone 120d.

Like the second communication modules described above, the alternative module 120 communicates via a wireless link with an associated first communication module and is designed to provide for hands-free operation. The speaker 120a is placed in a user's ear such that body section 120c and thus microphone 120d extend toward the user's mouth. Extension of the upper and lower main body sections 120b and 120c on opposite sides of the speaker 120a allows for effective weight balancing. A further feature of the alternative second communication module 120 involves a raised portion 128 that overlies the upper and lower main body sections 120b and 120c. The raised portion 128 is preferably a removable cover

member that provides simple access to manufacturer-selected internal components, such as a single-use replaceable battery, for service or installation by a user.

FIG. 16 is an exemplary electrical block diagram 160 of the multi-module communication devices shown in FIGs. 1-15. Another type of communication device that could be modified for use with this system is described in co-pending United States Patent Applications S/N 09/106,585, 09/344,432, 09/543,231, 09/634,774 and 09/663,972. These applications, which are co-owned with the present application, are hereby incorporated herein by reference. The communication devices described in these applications include only a single wireless RF component for communicating over a single communication path to a long-range wireless network. The devices shown in FIGs. 1-15 are similar to these devices in that they can communicate over a long-range wireless network, but also preferably include an RF interface for communicating over a short-range wireless network or link.

The communication devices 160 shown in FIGs. 1-15 preferably comprise a first communication module 161 and a second communication module 162. The first communication module 161 preferably includes a pair of antennas 164, 166 (although a single antenna structure could be used), a processor 174, a memory 172, an LCD display 180, at least one rechargeable battery 184, a long-range RF transceiver 168, one or more short-range RF transceivers 170, a power supply and recharging circuit 186, a cradle interface circuit 182, and one or more input devices, including, preferably, a keyboard 176 such as described in the above mentioned co-pending applications and a thumbwheel 178. The first communication module 161 may also include a pressure-sensitive writing tablet.

The input devices 176, 178 on the first communication module 161 are preferably used to respond to and generate messages, such as email messages. The first communication module 161 preferably interfaces with a belt-worn holster for receiving the first communication module 161 and securing it to a user's belt. The long-range RF transceiver

168 is used to send and receive information from the long-range wireless network, and the one or more short-range RF transceivers 170 are used to send and receive information from the second communication module 162, and possibly from other local devices such as an RF interface cradle.

The second communication module 162 is preferably an RF-enabled ear-piece that may be connected to (both mechanically and electrically) the first communication module 161 as described above. The second communication module 162 preferably includes a microphone and a speaker 190, a short-range wireless transceiver 192, an antenna 194, a rechargeable battery 188, and possibly an integral processor 196. The second communication module 162 may also include a background noise microphone 48 and a noise cancellation circuit 191 as described above with reference to Fig. 4. When the second communication module 162 is placed into the first communication module 161, a shared secret can be exchanged between the two wireless components of the communication device 160 so that any communications between the first and second communication modules 161/162 may be encrypted. Also, the rechargeable battery 188 of the second module 162 may be recharged by the battery 184 of the first communication module 161 through power supply recharging circuitry 186 when the two modules are in electrical contact.

In other embodiments, the communication device 160 may include a camera component for displaying or sending video images to the communication device user, or could include sensory circuits for monitoring the communication device user's vital information such as pulse and blood pressure. In these embodiments a nurse or doctor in a hospital floor could wear the first component, while the second might be in a patient's room monitoring some vital statistics. The short-range communication in this example might reach several hundred feet and several second components might be communicating to a single first

component. This information could then be relayed on from the first component worn by the nurse or doctor to a central nursing station for all nurses on duty to see and monitor.

Fig. 17 illustrates one contemplated implementation 200 of the communication device described above, wherein 212 denotes the first communication module and 214 is the second communication module. In this system 200, the first communication module 212 and second communication module 214 incorporate compatible short-range communication systems. This allows wireless communications between the first and second modules 212 and 214 over a short-range RF link 216. The first communication module 212 is also designed for communication over a wireless link 218 with a long-range wireless communication network 220. In this implementation 200, the first communication module 21 is preferably a mobile communication device such as a cellular telephone, a two-way pager or communications-enabled PDA, which would normally be carried by users in or on a belt clip or holder, or in a briefcase or purse.

The second communication module 214 is preferably a relatively low cost item, such that a user of a multiple-module device could purchase and suitably configure several second communication modules 214 for use with a single first communication module 212. The different second communication modules 214 could preferably be purchased "off-the-shelf" and then configured, for example, through an over-the-air registration process executed under user control of the first communication module 212.

The basic system 200 could be expanded in accordance with a further embodiment shown in Fig. 18 to include wireless communication between the device modules 212 and 214 and a third module 234, such as an RF interface cradle. If the first communication module 212 includes a rechargeable power source, then the third module 234 may be a docking station or cradle into or upon which the first module may be removably placed in order to recharge its power source. If the second communication module 214 is also powered

by a rechargeable source, then the second module 214 may also be recharged by mounting the fully assembled multiple-module communication device on the third module 234. A more detailed illustration of the third module 234 is shown in Fig. 18a.

The third module 234 is preferably adapted for short-range communications with either the first communication module 21 over the a short range RF link 236, the second communication module 214 over another short range RF link 238, or both. Many possible uses of such the additional short range RF links 236 and 238 are possible. For instance, the third module 234 may be connected to a desktop computer 232 as shown in Figs. 18 and 18a to expand the capabilities and potential applications of multiple module communication devices. The wireless links 236 and 238 may then be used to carry data and audio signals between the user and the computer 232, as well as any wired network 234 and associated components to which the computer is connected. Although shown as separate components in Figs. 18 and 18a, the third module 234 could alternatively be integrated into the computer 232.

Communication between the multiple-module device 212/214 and the computer 232 provides for countless possible functionality options, such as simple paging and other notification, remote- and voice-activated computer and peripheral control and wireless file or information downloading and uploading. This system may also be further expanded to include network communications between the first and second communication modules 212 and 214 and wired network 234 through the PC 232 to incorporate connectivity via small pico-cell networks. In such an implementation, each third module 234 connected to a corporate or other local area network such as the wired network 234, could be adapted to perform pico-cell base station functions. Each such "base station" third module 232 could, for example, then be configured for short-range communication with the first and/or second communication modules 212 and 214 of all multiple-module communication devices issued

to corporate employees. For communications between corporate users within the range of the pico-cell network, all device functions may then be performed without using the long-range wireless network 220, potentially generating significant cost savings. A further extension of the communication systems according to the above embodiments could be a personal area network (PAN).

Many different possibilities for inter-module communications features are also possible. For instance, if the first communication module 212 is a cellular telephone, then the second communication module 214 may provide a hands-free means for a user to answer and participate in a voice call received at the cellular telephone. If the modules were adapted for voice control, a cellular user may preferably initiate a telephone call, add a telephone number to a stored number list, cause the telephone to enter a locked mode, or control execution of other functions by the first module by simply speaking into the microphone of the second communication module 214.

If the first communication module 212 is enabled for data communication, then the second communication module 214 may expand its functionality. For instance, if the first communication module 212 is based on a data communication device, such as a two-way pager or a wireless modem in a laptop computer, then the addition of the second communication module 214 will enable voice communications in a device which was previously enabled only for data communication. A multiple-module communication device in accordance with this aspect of the invention can provide simultaneous voice and data communications. For example, a user that is participating in a voice communication using the second communication module 214 would preferably be able to simultaneously transmit data to the other parry to the call through the first communication module 212.

The embodiments described herein are examples of structures, systems or methods having elements corresponding to the elements of the invention recited in the claims. This

written description may enable those skilled in the art to make and use embodiments having alternative elements that likewise correspond to the elements of the invention recited in the claims. The intended scope of the invention thus includes other structures, systems or methods that do not differ from the literal language of the claims, and further includes other structures, systems or methods with insubstantial differences from the literal language of the claims.

We claim:

1. A communication device, comprising:

a first communication module having a housing with a cavity defined therein, and also having a first RF transceiver for communicating with a wireless network and a second RF transceiver, wherein the first communication module is configured to transmit and receive RF signals to and from the wireless network; and

a second communication module physically proportioned to be detachably mounted within the cavity of the first communication module and also to be fitted into or onto an ear of a communication device user, and comprising an RF transceiver configured to transmit and receive RF signals to and from the first communication device, a microphone coupled to the RF transceiver, and a speaker coupled to the RF transceiver, wherein the second communication module is configured to communicate with the second RF transceiver of the first communication module when the second communication module is physically detached from the cavity of the first communication module.

2. The communication device of claim 1, further comprising:

a rechargeable power source coupled to the RF transceiver, microphone and speaker in the second communication module;

a first set of terminals coupled to the rechargeable power source on the second communication module;

a second set of terminals located within the cavity of the first communication module and coupled to a power source;

wherein the first set of terminals is electrically and physically coupled to the second set of terminals while the second communication module is mounted within the cavity of the

first communication module in order to charge the rechargeable power source in the second communication module.

3. The communication device of claim 2, wherein the power source coupled to the second set of terminals in the first communication module is a power supply circuit coupled to a battery.

4. The communication device of claim 1, wherein the first RF transceiver in the first communication module is a long-range RF transceiver.

5. The communication device of claim 1, wherein the second RF transceiver in the first communication module and the RF transceiver in the second communication module are short-range RF transceivers.

6. The communication device of claim 1, wherein the first communication module is configured to be worn on a belt of the communication device user.

7. The communication device of claim 1, wherein the second communication module further comprises a background noise microphone and a noise cancellation circuit coupled to both the microphone and the background noise microphone, and configured to detect background noise signals from the background noise microphone and remove the background noise signals from a speech signal received by the microphone to generate a filtered signal that is transmitted to the first communication module by the RF transceiver.

8. The communication device of claim 1, wherein the second communication module further comprises a power switch configured to turn the second communication module on or off while it is detached from the first communication module.

9. The communication device of claim 1, wherein second RF transceiver in the first communication module is configured to communicate with both the second communication module and a third module.

10. The communication device of claim 9, wherein the third module is coupled to a personal computer and is configured to transmit data between the personal computer and the first communication module.

11. The communication device of claim 9, wherein the third module is coupled to a computer network and is configured to transmit data between the computer network and the first communication module.

12. The communication device of claim 1, wherein RF transceiver in the second communication module is configured to communicate with both the first communication module and a third module.

13. The communication device of claim 1, wherein the first communication module is a cellular phone.

14. The communication device of claim 1, wherein the first communication module is a personal digital assistant (PDA).

15. The communication device of claim 1, wherein the first communication module is a laptop computer.

16. A communication device, comprising:

a first communication module comprising a housing with a cavity defined therein and a set of charging terminals located within the cavity, wherein the charging terminals are coupled to a power source; and

a second communication module comprising an outer housing, a speaker attached to the outer housing and physically dimensioned to be fitted into an ear of a communication device user, a microphone attached to the outer housing and positioned to extend substantially towards the communication devise user's mouth when the speaker is fitted into the ear of the communication device user, a rechargeable power source, and a set of terminals attached to a bottom surface of the outer housing and coupled to the rechargeable power source, wherein the second communication module is physically dimensioned to be detachably mounted within the cavity of the first communication module such that the terminals on the second communication module are physically and mechanically coupled to the charging terminals while the second communication module is mounted within the cavity in order to charge the rechargeable power source.

17. The communication device of claim 16, wherein terminals are recessed below a surface of the outer housing of the second communication module.

18. The communication device of claim 17, wherein the charging terminals located within the cavity of the first communication module protrude from a surface of the cavity in order to physically contact the recessed terminals in the second communication module.

19. The communication device of claim 16, wherein the power source coupled to the charging terminals in the first communication module is a power supply circuit coupled to a rechargeable power source.

20. The communication device of claim 16, wherein the power source coupled to the charging terminals in the first communication module is a power supply circuit coupled to a non-rechargeable power source.

21. The communication device of claim 16, wherein the second communication module further comprises a set of operational terminals attached to a top surface of the outer housing and coupled to the rechargeable power source, wherein the second communication module may be mounted in the cavity of the first communication module in either an inoperative position in which the charging terminals in the cavity are coupled to the terminals attached to the bottom surface of the outer housing, or an operative position in which the charging terminals in the cavity are coupled to the operational terminals attached to the top surface or the outer housing.

22. The communication device of claim 21, wherein the first communication module further comprises a second set of charging terminals, wherein the second set of charging terminals are coupled to the operational terminals of the second communication module while the second communication module is mounted in the operative position.

23. The communication device of claim 16, wherein the power source in the first communication module is a rechargeable power source, and wherein the first communication module is configured to be electrically and mechanically coupled to a third module in order to charge the rechargeable power source.

24. The communication device of claim 16, wherein the cavity in the first communication module is substantially enclosed such that the second communication module is detachably mounted within the cavity by sliding the second communication module lengthwise into the cavity.

25. A communication device, comprising:

a first communication module comprising a housing with a cavity defined therein; and

a second communication module comprising an outer housing, a speaker attached to the outer housing and physically dimensioned to be fitted into an ear of a communication device user, a microphone attached to the outer housing and positioned to extend substantially towards the communication devise user's mouth when the speaker is fitted into the ear of the communication device user, wherein the second communication module is physically dimensioned to be detachably mounted within the cavity of the first communication module;

wherein the first and second communication modules are configured to communicate over a wireless link when the second communication module is physically detached from the cavity in the first communication module.

26..The communication device of claim 25, wherein the cavity in the housing of the first communication module includes surfaces that are contoured to provide retention of the second communication module within the cavity.

27. The communication device of claim 26, wherein the contoured surfaces of the cavity include retention means that engage detents in corresponding surfaces of the second communication module.

28. The communication device of claim 25, wherein the first communication module includes a movable clip device that retains the second communication module within the cavity.

29. The communication device of claim 25, wherein the first communication module further comprises a protective door hingedly connected to the housing and extending over the cavity, wherein the protective door may be closed to cover the second communication module while it is mounted within the cavity.

30. The communication device of claim 29, wherein the protective door includes a locking mechanism.

31. The communication device of claim 25, wherein the cavity in the housing of the first communication module includes surfaces having depressions that enable the communication device user to grasp the second communication module while it is fitted within the cavity.

32. A communication device, comprising:

a first communication module configured to receive RF signals from a wireless network;

a second communication module that may be physically attached to the first communication module and that is coupled to the first communication module by a wireless link and is configured to receive the RF signals from the first communication module over the wireless link and convert the RF signals into an audible signal, wherein the second communication module is physically dimensioned so that it may be fitted into or onto an ear of a communication device user.

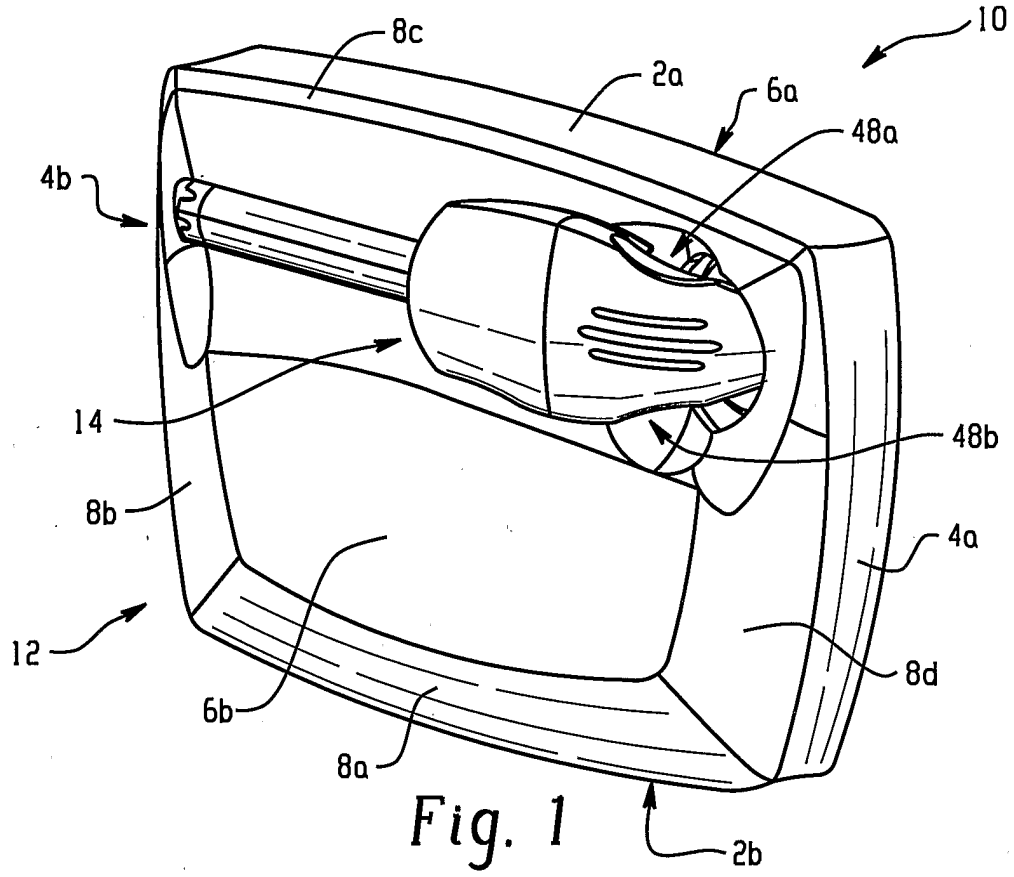

Fig. 1

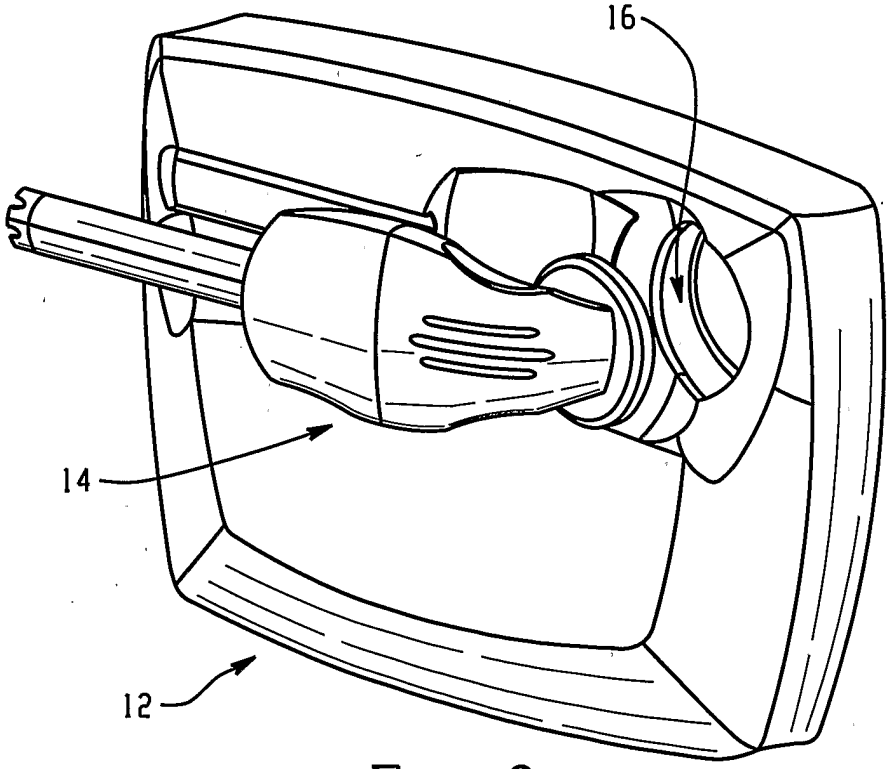

Fig. 2

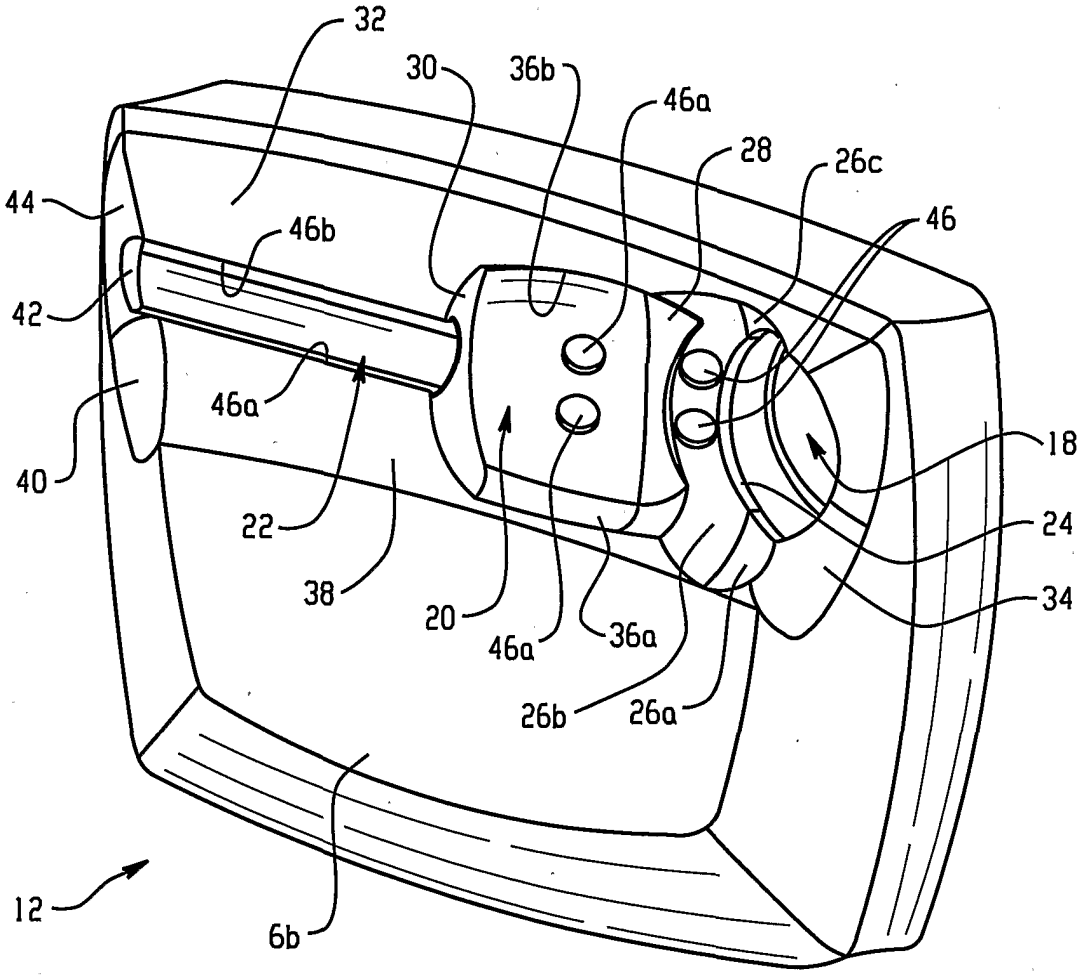
32
30
36b
46a
28
26c
46
44
46b
42
46a
40
22
38
20
46a
36a
26b
26a
18
24
34
12
6b

Fig. 3

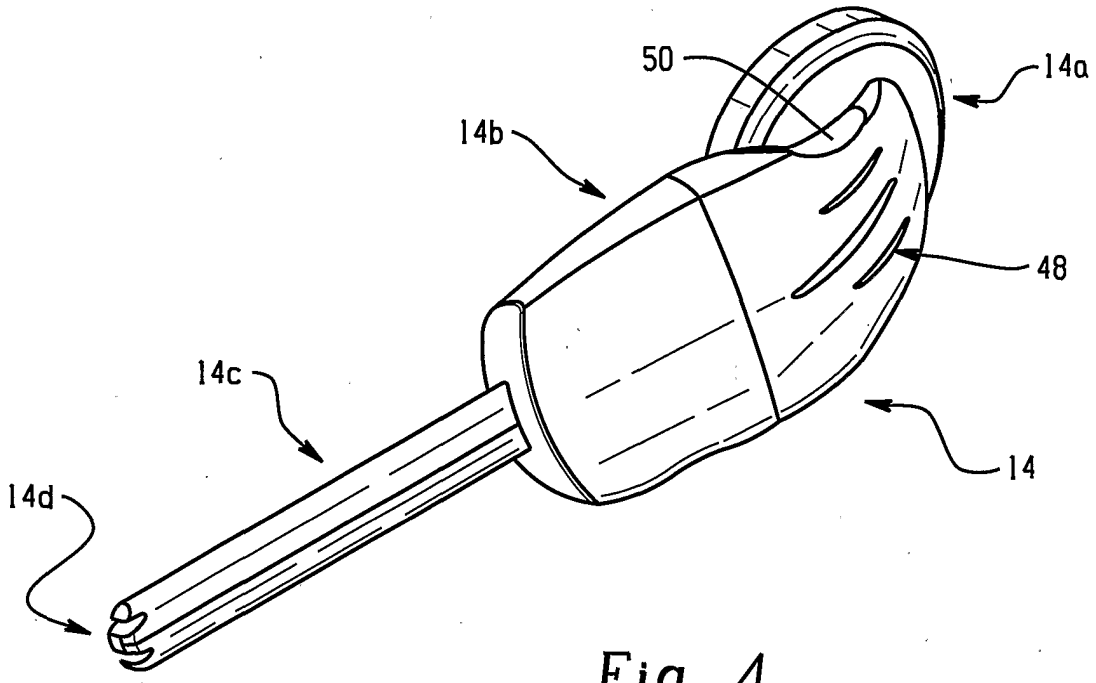

Fig. 4

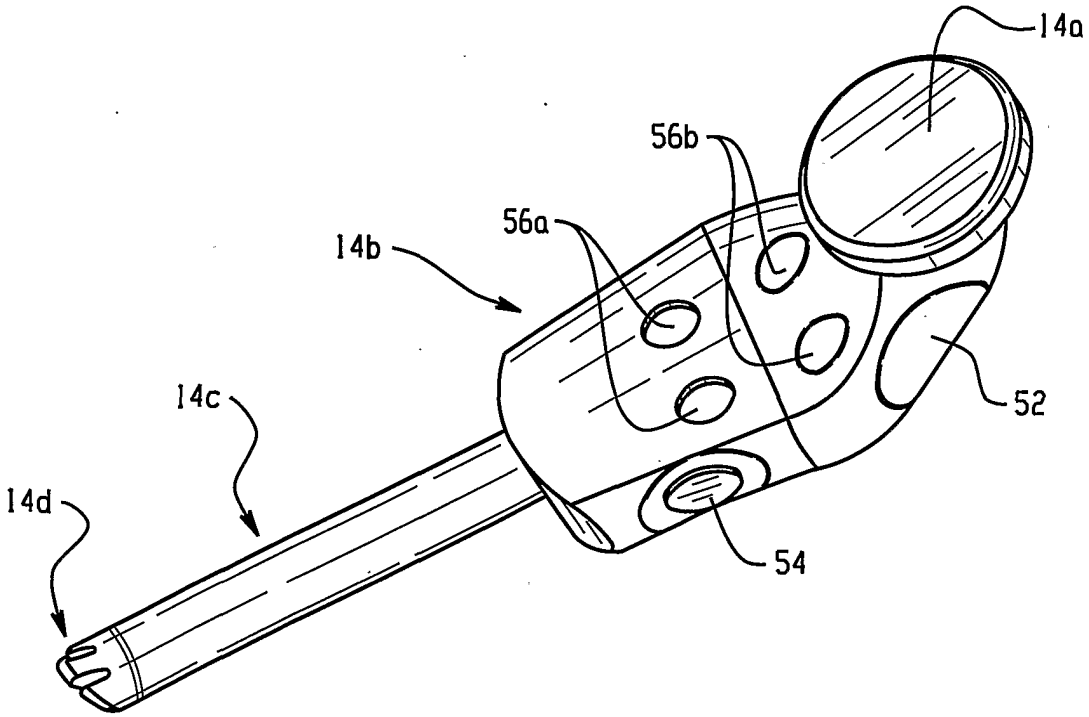

Fig. 5

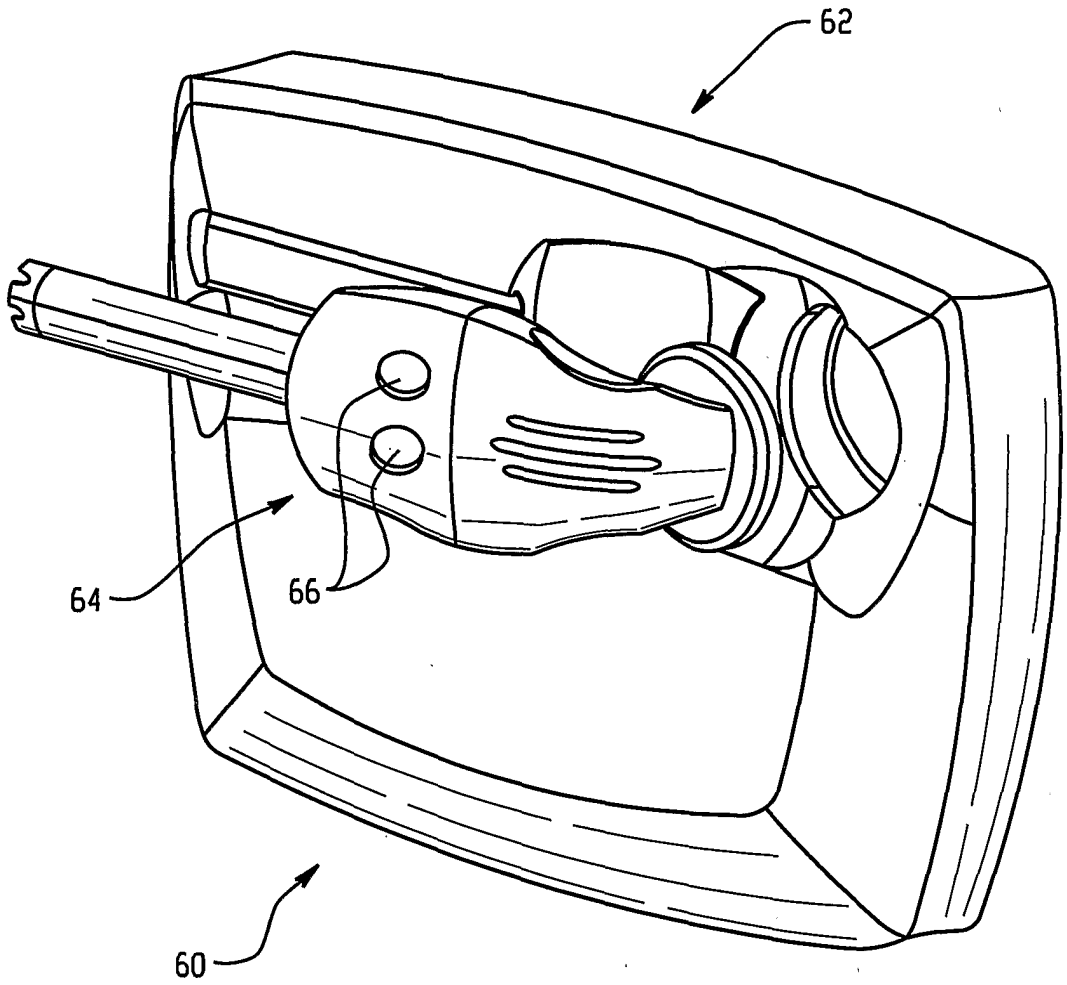

Fig. 6

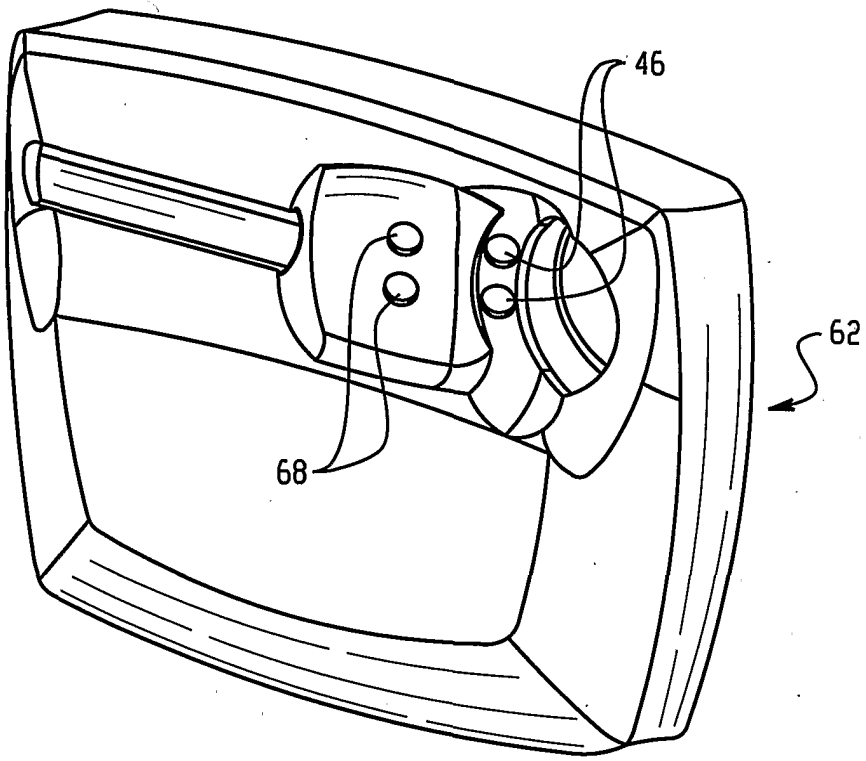

Fig. 7

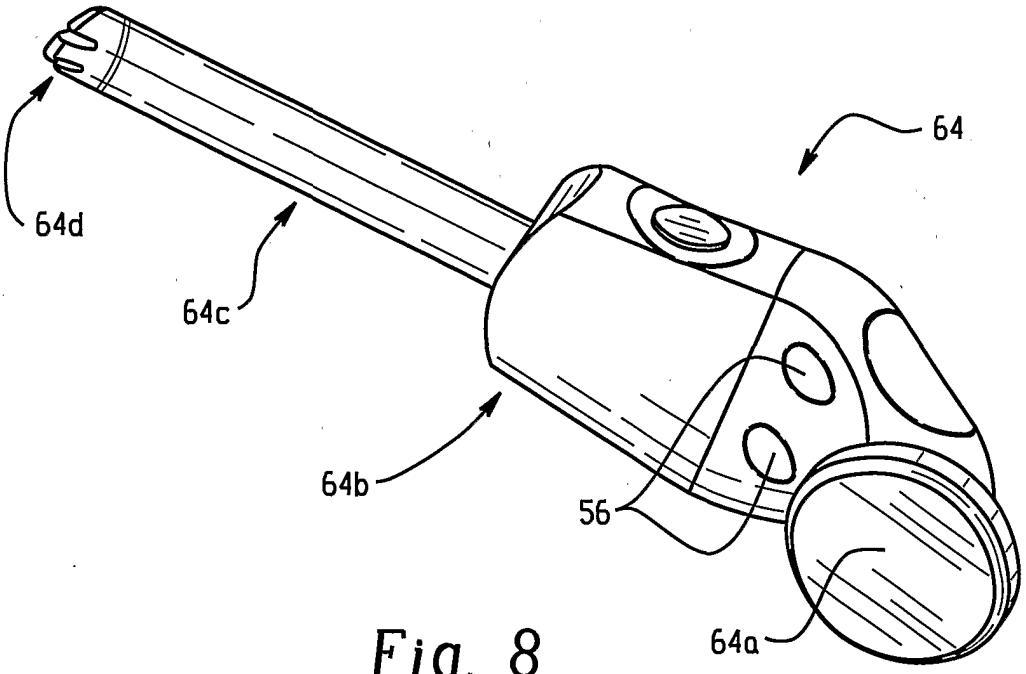

Fig. 8

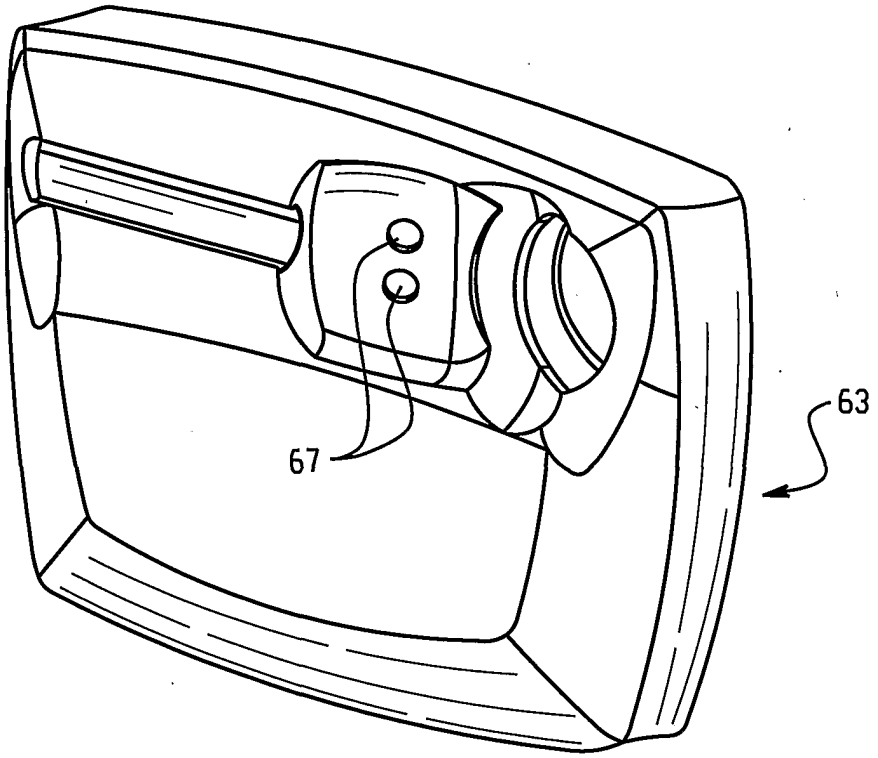

Fig. 9

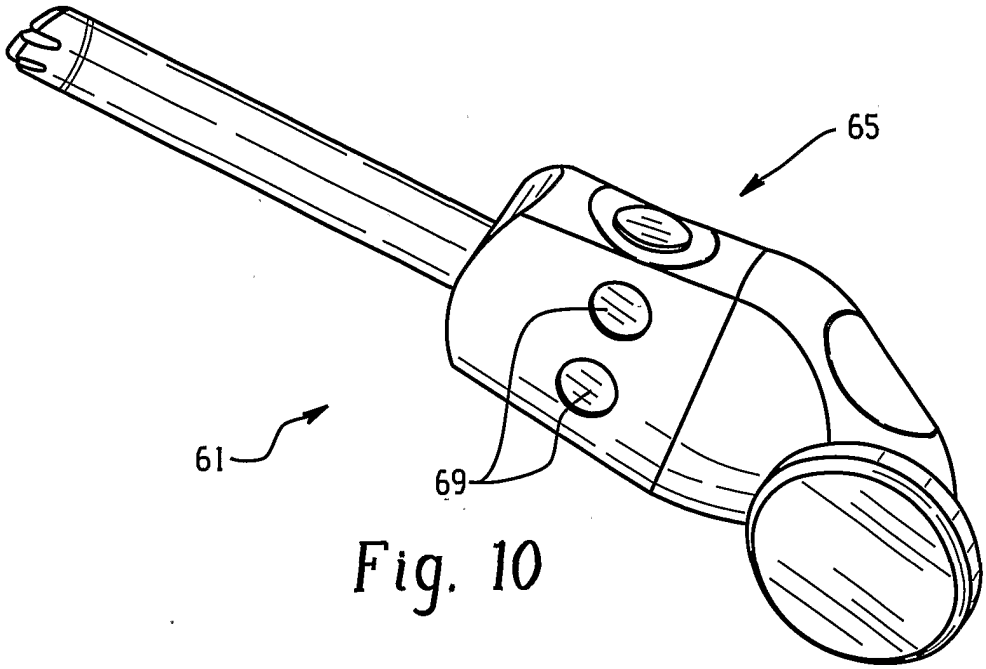

Fig. 10

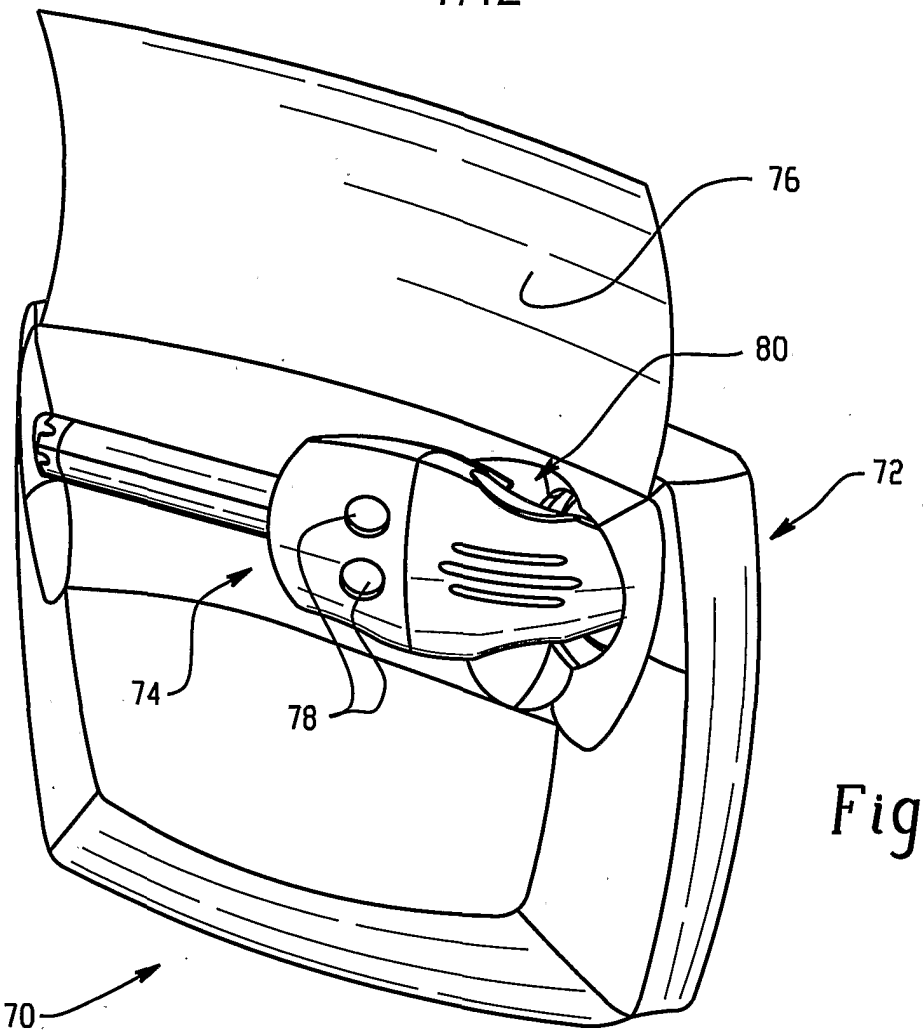

Fig. 11

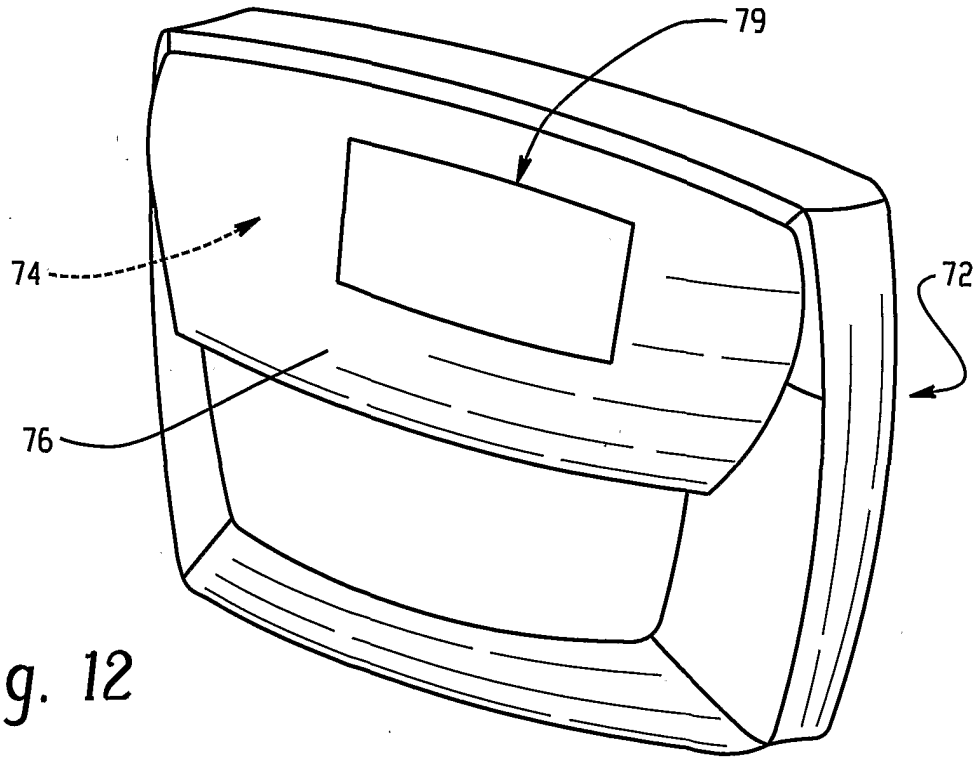

Fig. 12

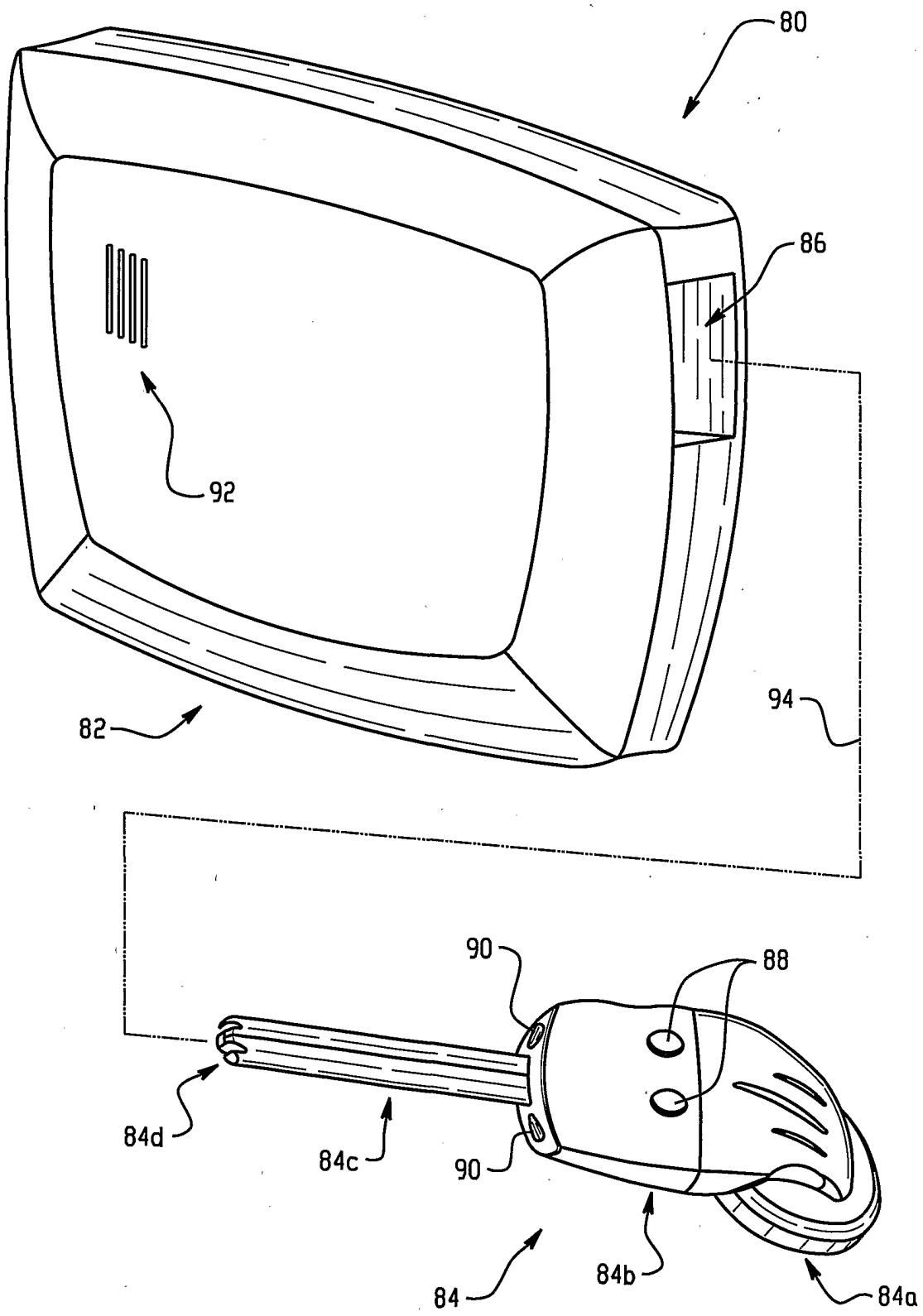

Fig. 13

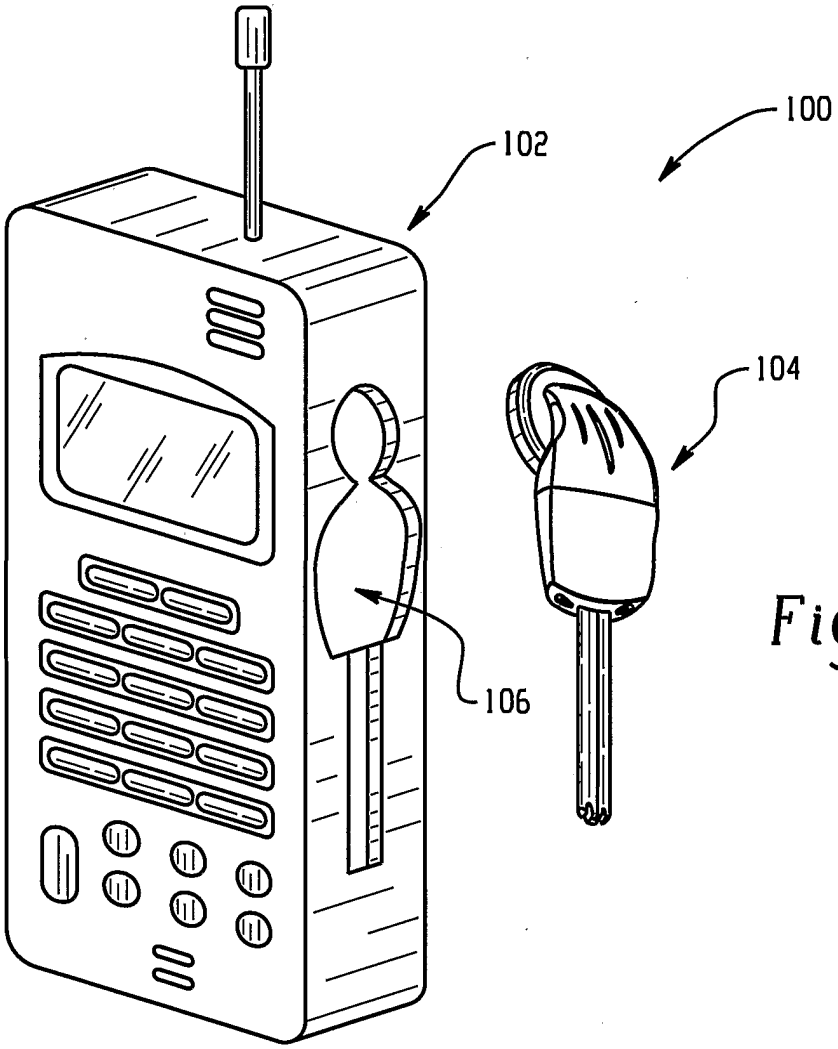

Fig. 14a

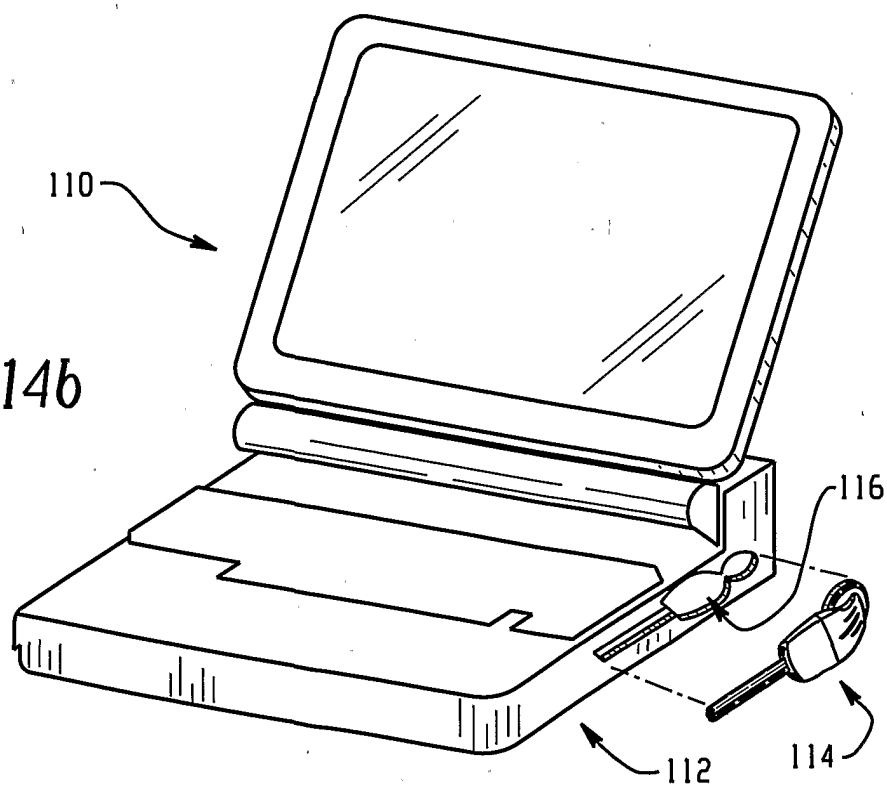

Fig. 14b

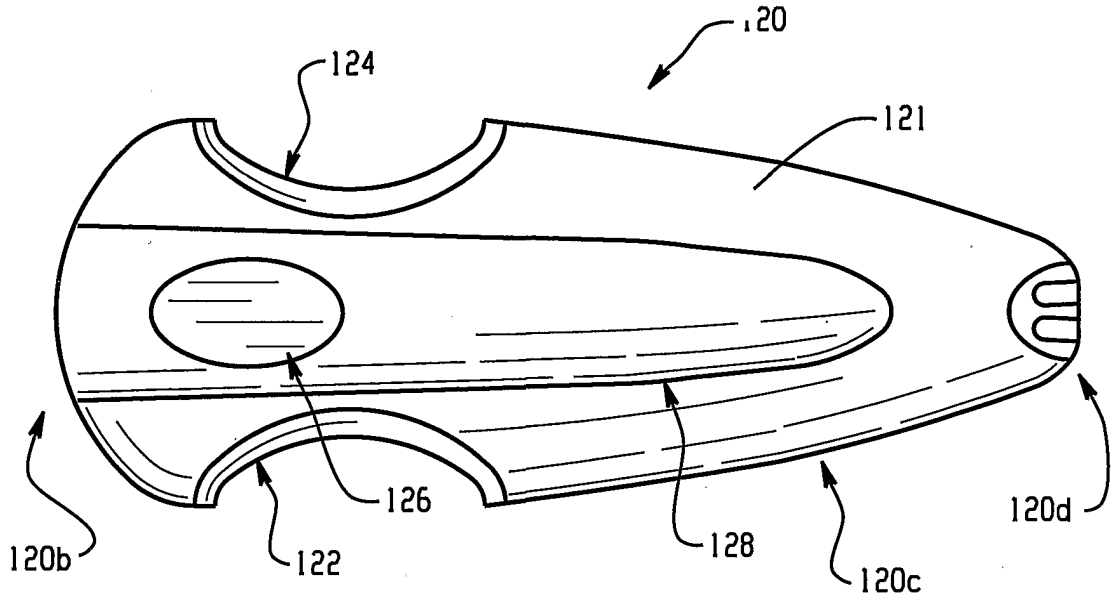

Fig. 15a

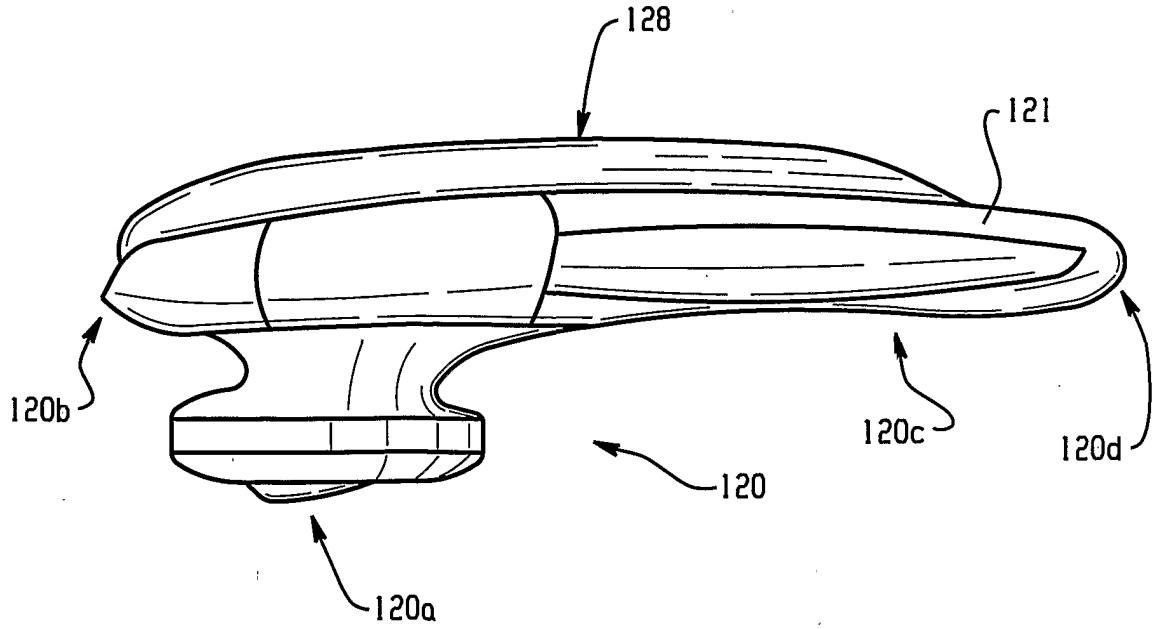

Fig. 15b

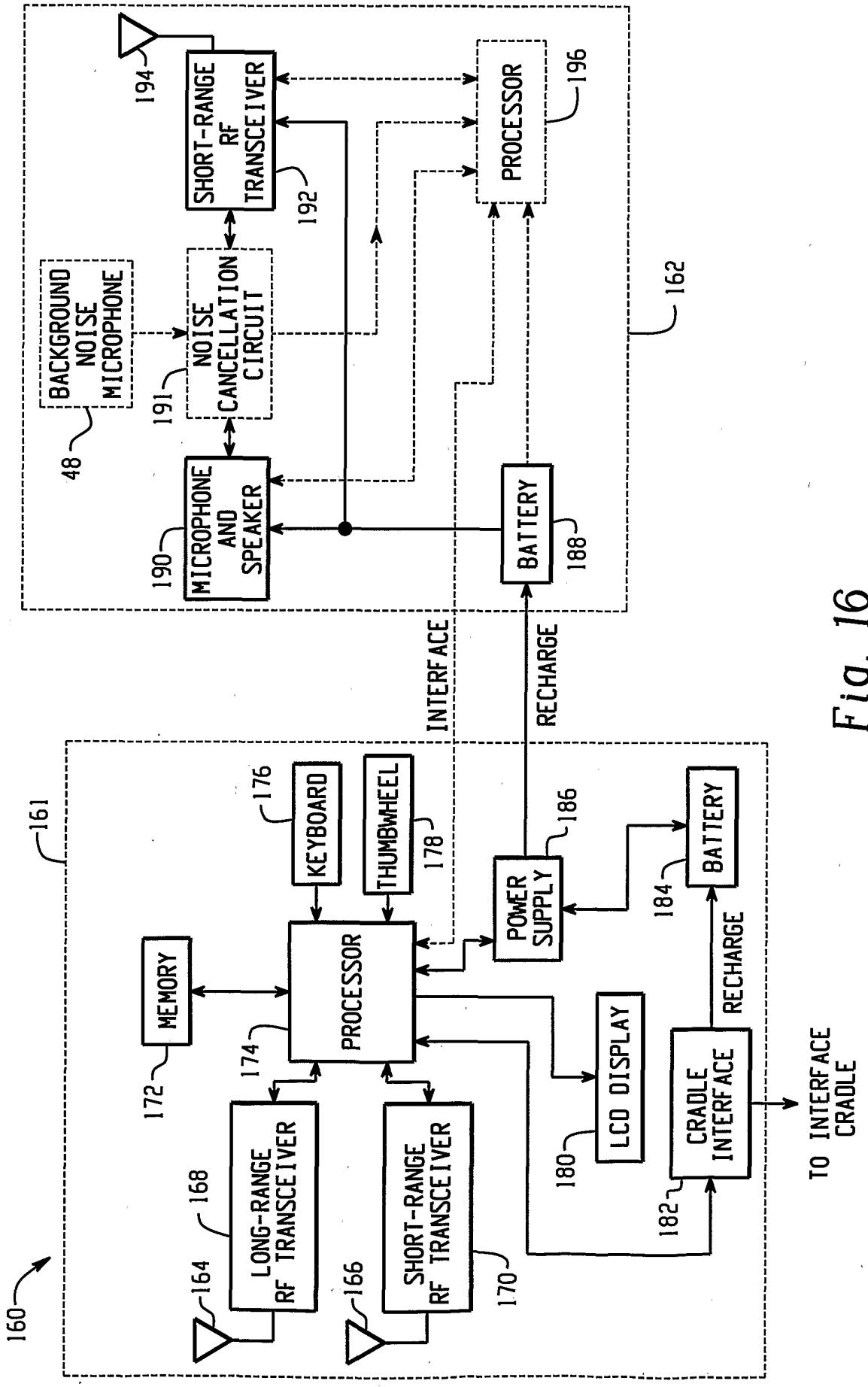
SHORT-RANGE RF TRANSCEIVER
194
192
PROCESSOR
196
162
BACKGROUND NOISE MICROPHONE
48
NOISE CANCELLATION CIRCUIT
191
MICROPHONE AND SPEAKER
190
BATTERY
188
INTERFACE
RECHARGE
161
KEYBOARD
176
THUMBWHEEL
178
POWER SUPPLY
186
BATTERY
184
MEMORY
172
PROCESSOR
174
LCD DISPLAY
180
CRADLE INTERFACE
182
RECHARGE
TO INTERFACE CRADLE
LONG-RANGE RF TRANSCEIVER
168
164
SHORT-RANGE RF TRANSCEIVER
170
166
160

Fig. 16

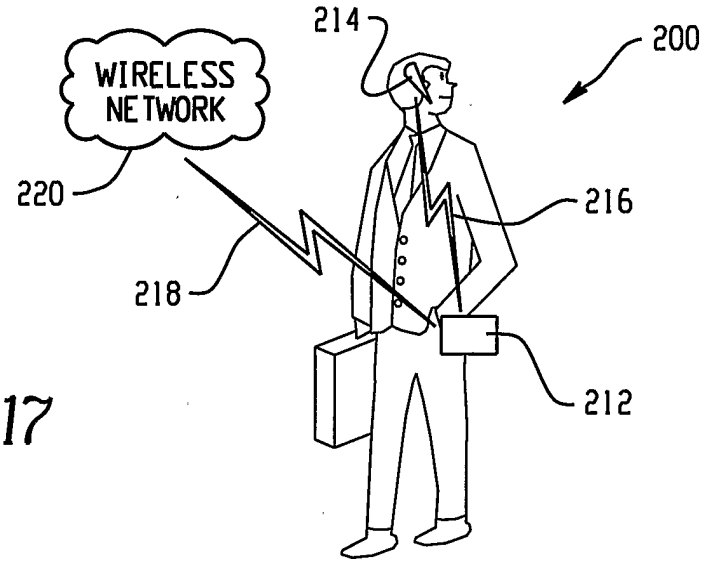

Fig. 17

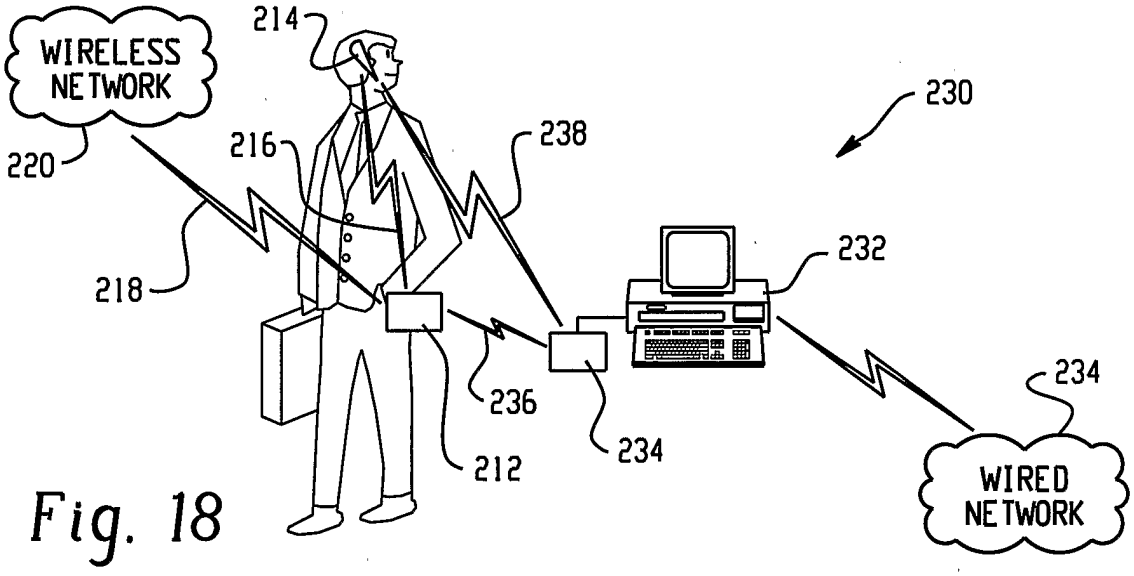

Fig. 18

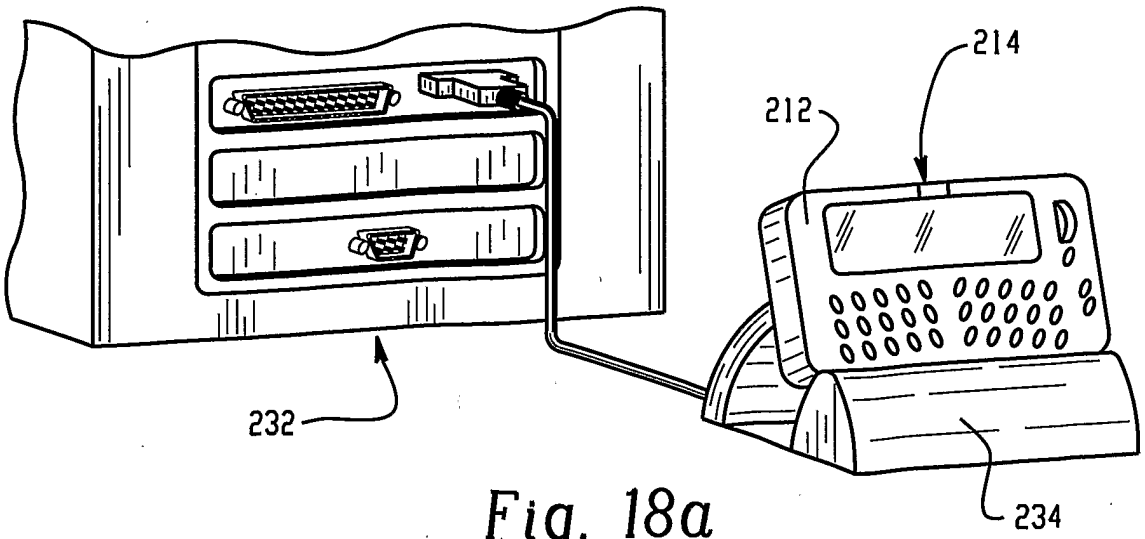

Fig. 18a