United States Patent [19]

Silver

[11] **Patent Number: 4,882,745**

[45] **Date of Patent: Nov. 21, 1989**

[54] **CORDLESS HEADSET TELEPHONE**

[76] Inventor: **Alan H. Silver**, 130 NE. 41st St., Apt. #8, Ft. Lauderdale, Fla. 33334

[21] Appl. No.: **325,071**

[22] Filed: **Mar. 20, 1989**

Related U.S. Application Data

[63] Continuation of Ser. No. 50,700, May 8, 1987, abandoned.

[51] **Int. Cl.**[4] **H04Q 7/04**

[52] **U.S. Cl.** **379/61**; 455/90; 381/183

[58] **Field of Search** 379/61, 62, 63, 56; 455/90; 381/183

[56] **References Cited**

U.S. PATENT DOCUMENTS

3,889,190	6/1975	Palmer	325/16
3,916,312	10/1975	Campbell	325/16
4,122,304	10/1978	Mallien II	379/63
4,340,972	7/1982	Heist	455/39
4,481,382	11/1964	Villa Real	379/61
4,484,029	11/1984	Kenney	179/2
4,491,699	1/1985	Walker	179/156
4,591,661	5/1986	Benedetto et al.	379/58
4,634,810	1/1987	Grassl et al.	379/61
4,640,987	2/1987	Tsukana et al.	379/62
4,650,931	3/1987	Tsukada et al.	379/61
4,706,274	11/1987	Baker et al.	379/61
4,731,812	3/1988	Akerberg	379/61
4,768,218	8/1988	Yorita	379/61

FOREIGN PATENT DOCUMENTS

0126690	11/1984	European Pat. Off.	381/188

Primary Examiner—Robert Lev

Attorney, Agent, or Firm—Oltman and Flynn

[57] **ABSTRACT**

Cordless headset telephone system including at least one headset having at least one earpiece, a swingout microphone and a headset transmitter and receiver connected to a common antenna, at least one base having a base transmitter and receiver having a common antenna, respectively tuned to the headset transmitter and receiver, and apparatus included in the base circuit for seizing at least one telephone line.

26 Claims, 7 Drawing Sheets

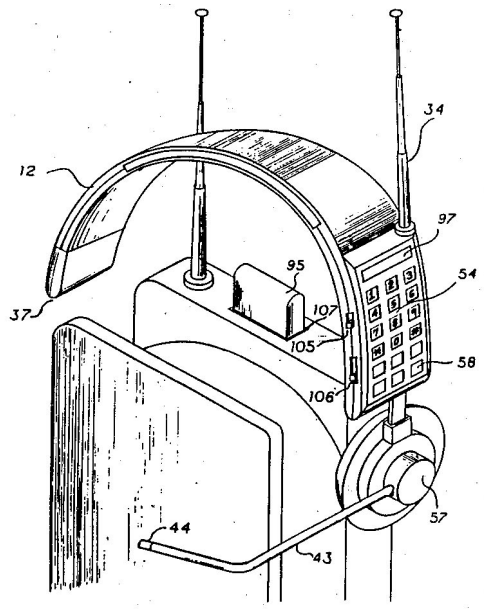

Bose Exhibit 1008
Bose v. IngenioSpec

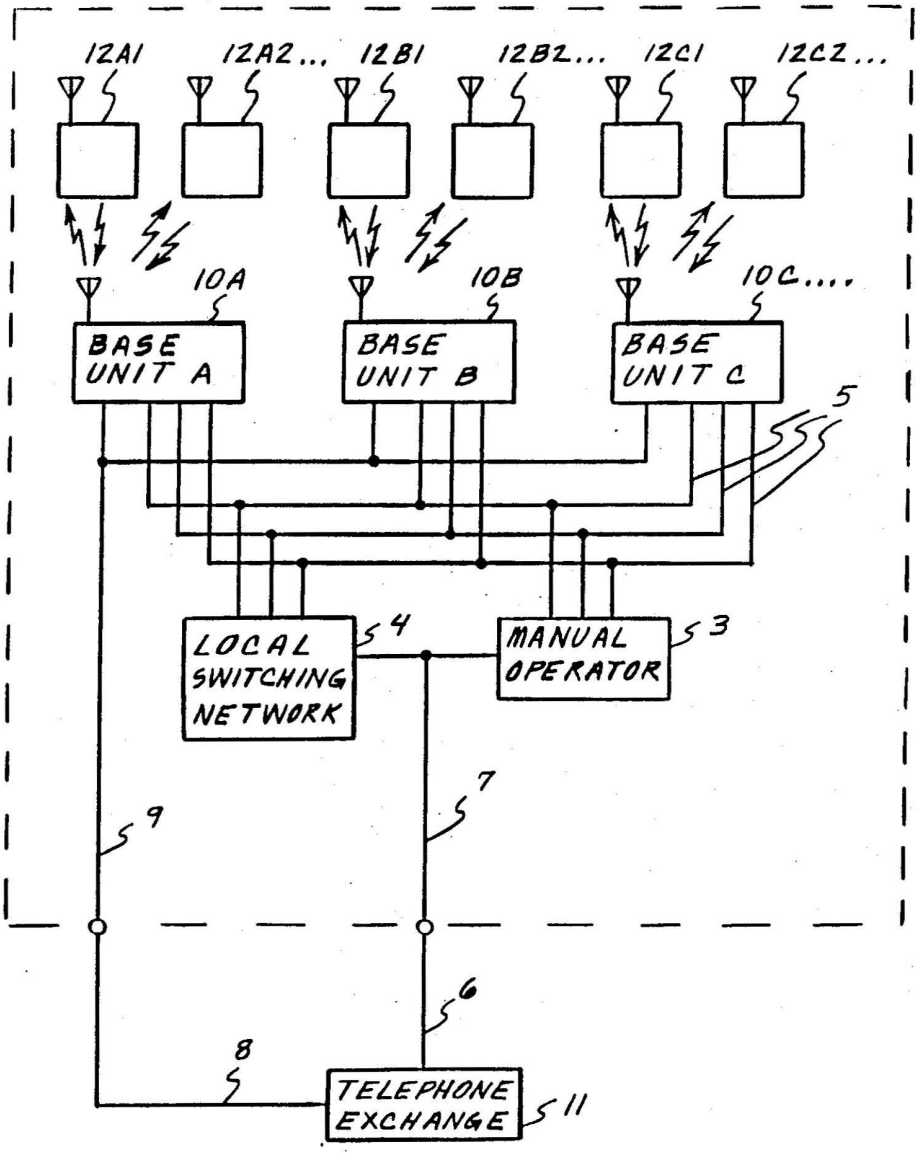
12A1
12A2...
12B1
12B2...
12C1
12C2...
10A
10B
10C....
BASE UNIT A
BASE UNIT B
BASE UNIT C
5
LOCAL SWITCHING NETWORK
4
MANUAL OPERATOR
3
7
9
6
8
TELEPHONE EXCHANGE
11

FIG. 1

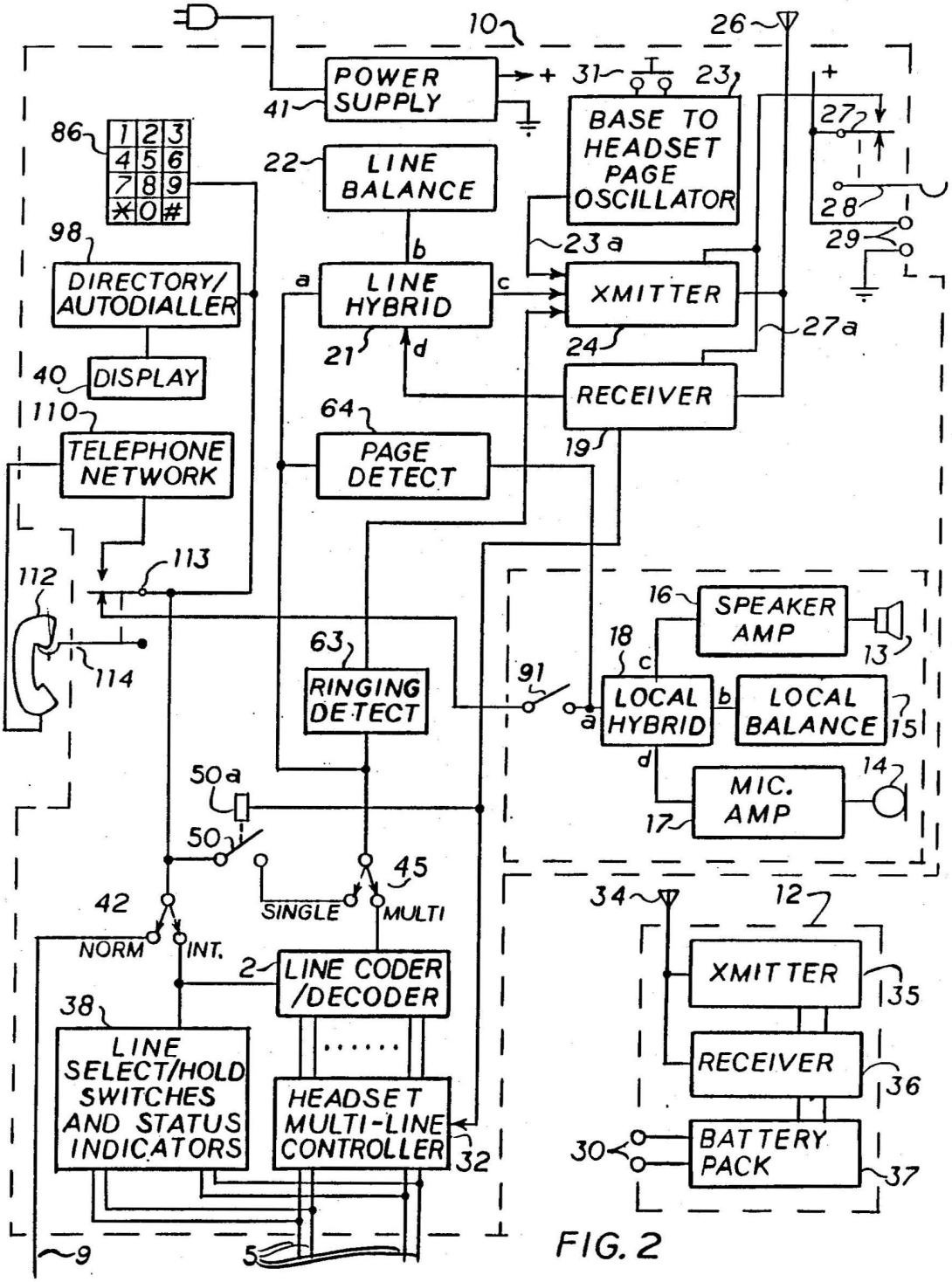
10
26
POWER SUPPLY
41
31
23
BASE TO HEADSET PAGE OSCILLATOR
27
28
29
86
1 2 3
4 5 6
7 8 9
* 0 #
22
LINE BALANCE
98
DIRECTORY/ AUTODIALLER
b
a
LINE HYBRID
c
23a
XMITTER
27a
21
d
24
40
DISPLAY
RECEIVER
110
TELEPHONE NETWORK
64
PAGE DETECT
19
113
112
114
16
SPEAKER AMP
13
18
c
63
RINGING DETECT
91
a
LOCAL HYBRID
b
LOCAL BALANCE
15
d
14
MIC. AMP
17
50a
50
45
42
SINGLE
MULTI
NORM
INT.
34
12
2
LINE CODER /DECODER
XMITTER
35
38
LINE SELECT/HOLD SWITCHES AND STATUS INDICATORS
RECEIVER
36
HEADSET MULTI-LINE CONTROLLER
32
30
BATTERY PACK
37
9
5

FIG. 2

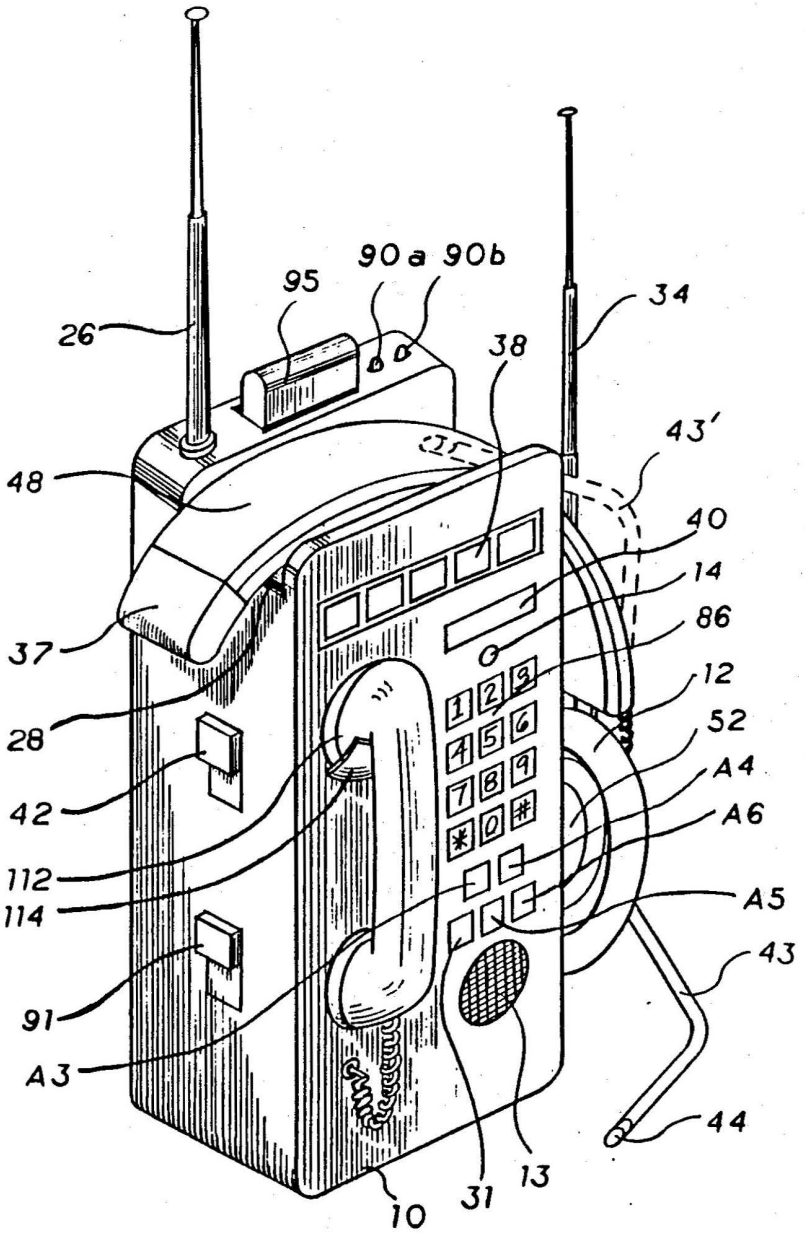
95
90a 90b
26
34
38
43'
48
40
14
86
37
12
28
52
A4
42
A6
112
114
A5
43
91
A3
44
10
31
13

FIG. 3

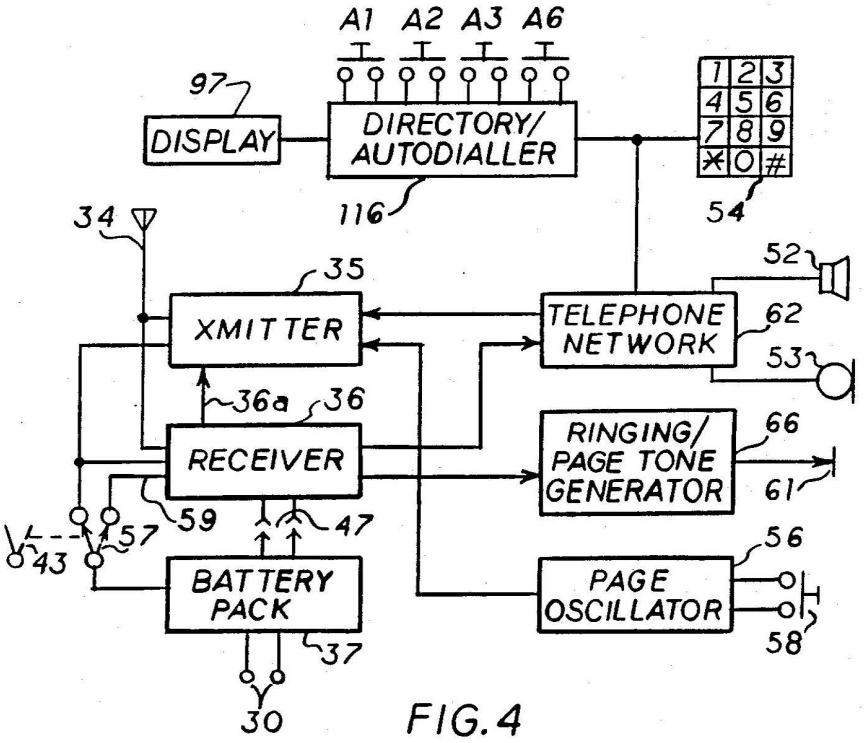
A1
A2
A3
A6
97
DISPLAY
DIRECTORY/
AUTODIALLER
116
1 2 3
4 5 6
7 8 9
* 0 #
54
34
35
XMITTER
TELEPHONE
NETWORK
62
52
53
36a
36
RECEIVER
RINGING/
PAGE TONE
GENERATOR
66
61
59
47
57
43
BATTERY
PACK
37
30
PAGE
OSCILLATOR
56
58

FIG. 4

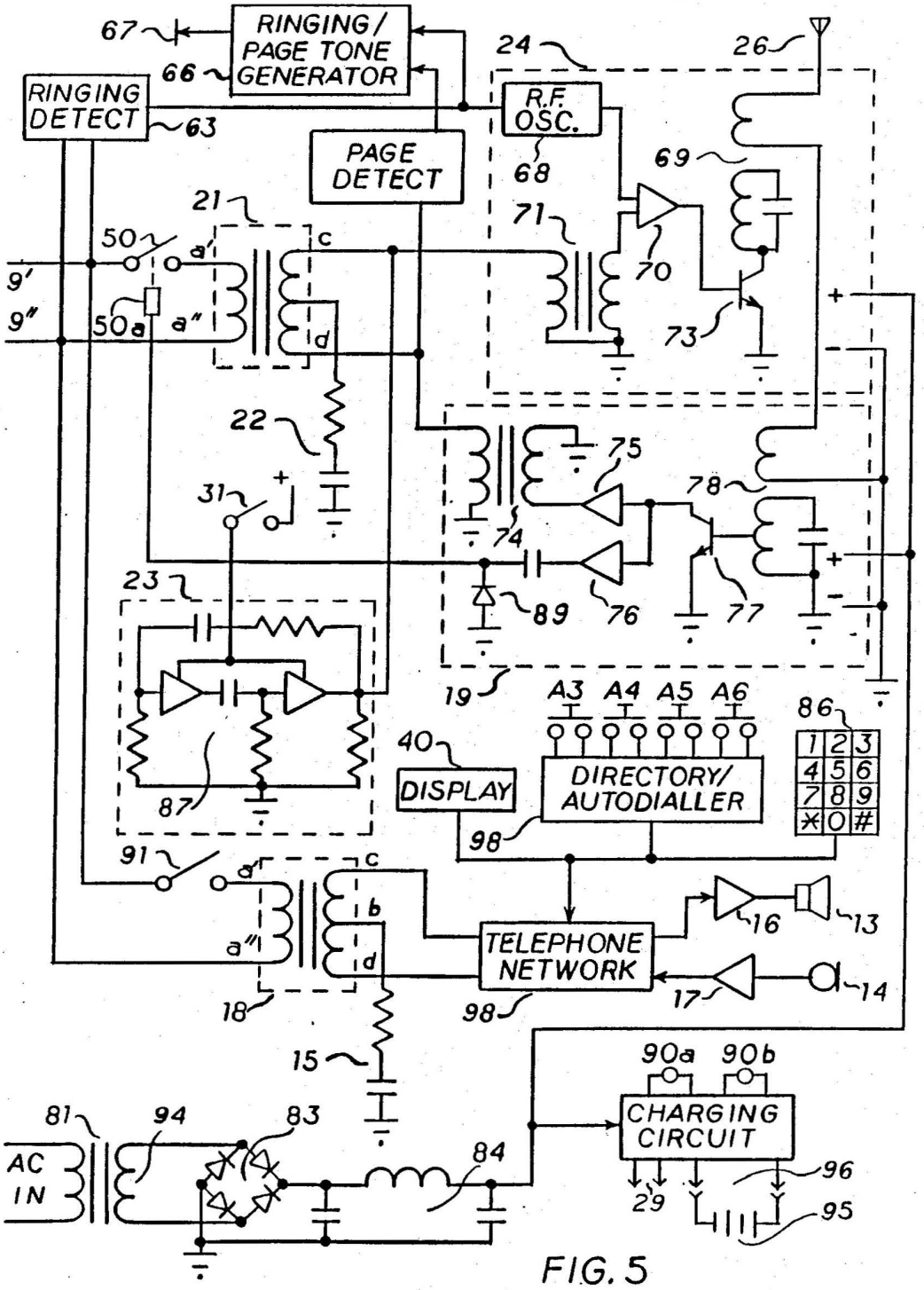
RINGING/ PAGE TONE GENERATOR
RINGING DETECT
PAGE DETECT
R.F. OSC.
DISPLAY
DIRECTORY/ AUTODIALLER
TELEPHONE NETWORK
CHARGING CIRCUIT
AC IN
A3 A4 A5 A6
1 2 3
4 5 6
7 8 9
* 0 #
9'
9"
50
50a
a'
a"
c
d
b
67
66
63
24
26
68
69
70
71
73
21
22
31
23
87
75
74
76
77
78
89
19
40
98
86
91
18
16
13
17
14
15
81
94
83
84
90a
90b
29
96
95

FIG. 5

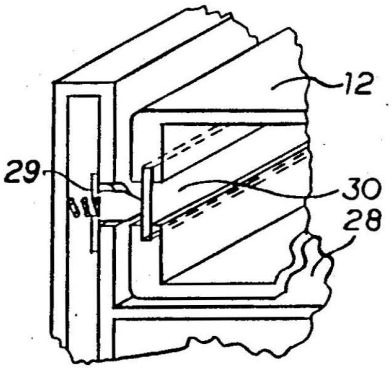

FIG. 6a

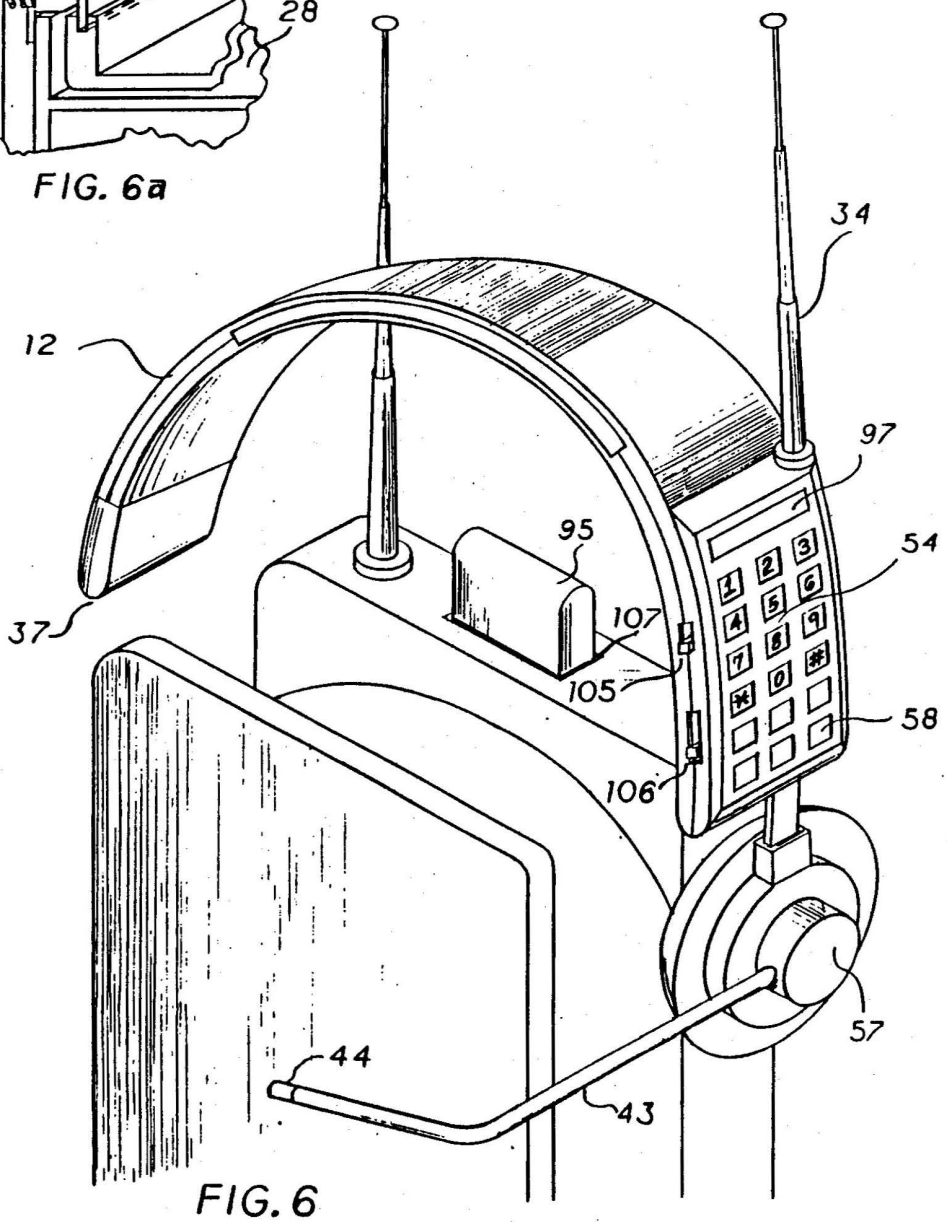

FIG. 6

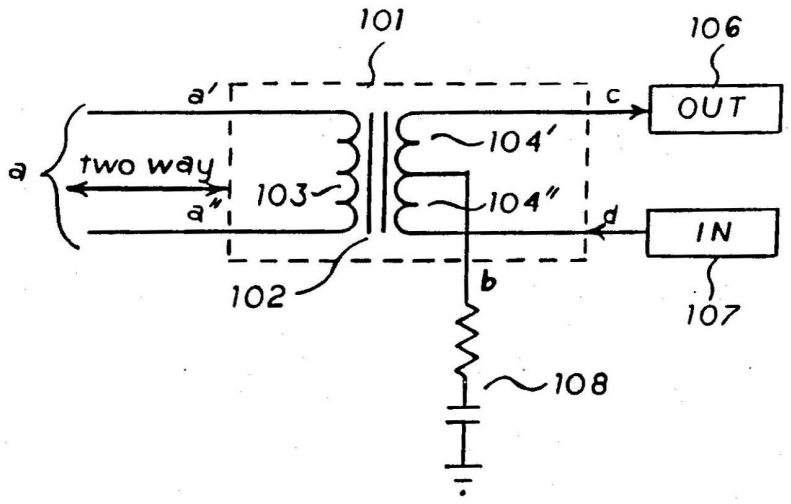

FIG. 7

CORDLESS HEADSET TELEPHONE

This application is a continuation of application Ser. No. 07/050,700, filed 05/18/87 now abandoned.

BACKGROUND AND OBJECTS

The invention relates to telephone apparatus, and more particularly to one or more headsets with one or more bases for a cordless telephone telecommunications system.

In using a cordless telephone of the conventional type having a hand-held handset with an antenna and built-in radio transmitter and receiver, it has been found that it is inconvenient to carry around such a handset. It is therefore a primary object of the invention to overcome this inconvenience by providing a cordless telephone instrument formed as a headset with built in transmitter and receiver apparatus, which can be placed on the head of a user, who thereby has both hands free to do tasks other than carrying a cordless telephone.

It is another object to provide such a telephone that has a base part with a built-in charger for charging at least one interchangeable spare battery, and corresponding radio or infrared receiver and transmitter.

SUMMARY OF THE INVENTION

The invention includes one or more headsets having at least one earpiece and a microphone attached thereto, a built-in radio frequency transmitter and receiver connected to an antenna, or an infrared light-emitting transmitting and receiving apparatus, a detachable rechargeable battery pack for supplying power to the headset and one or more bases having a cradle for storing the headset thereon, and a pair of charging contacts for providing electrical connection between the headset and the base, a base transmitter and receiver with antenna built into the base for communicating with the headset transmitter and receiver and a battery charger for charging the headset battery pack while the headset is stored on its cradle at the base.

According to still another feature, the base has means for communicating with a local switching network, manual operator or a telephone exchange, and/or for extending the connection to the headset.

According to a further feature, the base has charge capacity for charging at least one detachable spare battery pack within a storage compartment **107** disposed within the base.

According to still another feature the headset telephone and the base each include an electronic telephone directory/autodialler having an electronic memory, keypad and display panel. These will enable the user to enter, edit and view the names and corresponding telephone numbers of frequently called parties and to dial the selected party by depressing a "dial" button. Additionally, a headset page button and a base page button are connected to call-tone oscillators in engagement with the base and headset transmitters respectively for generating a page tone to be heard at the headset and base respectively.

According to still another feature, the base includes a telephone handset and/or a speakerphone enabling a user at the base to communicate with the user having the headset and/or the telephone exchange.

According to still another feature, several base and/or headset units may be networked together allowing multiuser, multi-link operation.

Further objects and advantages of this invention will be apparent from the following detailed description of a presently preferred embodiment which is illustrated schematically in the accompanying drawings.

BRIEF DESCRIPTION OF THE FIGURES

FIG. **1** is a block diagram of a cordless headset telephone system showing the functional blocks of the headsets and the bases, and their connection to a telephone exchange for both single and multi-line service.

FIG. **2** is a block diagram of the cordless headset telephone showing the function blocks of a headset and a base.

FIG. **3** is a perspective view of a cordless headset telephone showing the headset, the base, and other details thereof.

FIG. **4** is a more detailed block diagram of the headset circuit.

FIG. **5** is a more detailed diagram of the base circuit showing the various function blocks and their interconnections.

FIG. **6** is another perspective view of the headset in the headset cradle, showing a set of charging contacts, and the keypad for dialling telephone numbers and the auxiliary battery pack in its charging compartment.

FIG. **6*a*** is a fragmentary detail of the headset charge contacts.

FIG. **7** is a diagram of a telephone hybrid circuit.

Before explaining the disclosed embodiment of the present invention in detail it is to be understood that the invention is not limited in its application to the details of the particular arrangement shown since the invention is capable of other embodiments. Also, the terminology used herein is for the purpose of description and not of limitation.

DESCRIPTION OF THE PREFERRED EMBODIMENTS

Referring now especially to FIG. **1**, which gives a block diagram of a system using several cordless headset telephone units and shows several bases **10A**, **10B**, **10C**, etc. connected by a conventional two wire local telephone line **9** via a conventional two wire exchange telephone line **8** to a conventional telephone exchange **11**. The headsets **12A1**, **12A2** etc., **12B1**, **12B2** etc., **12C1**, **12C2** etc. are constructed to be placed on the head of the users for communicating by a radio frequency or infrared light connection with the bases **10A**, **10B**, **10C** etc. which are in turn capable of communicating with outside parties via the local telephone line **9** to the exchange telephone line **8**, or the local telephone multi-line **7** to the exchange telephone multi-line **6** to the telephone exchange **11**.

Multi-user, multi-link communication between two or more headsets **12A1** . . . **12C2** via the headset multi-line controller **32** (FIG. **2**) or between two or more bases **10A** . . . **10C** is possible via the local network multi-line **5**, and the local switching network **4** or the manual operator **3**.

In order to simplify the remainder of the following detailed description, any headset **12A1**, **12A2** etc., **12B1**, **12B2** etc., **12C1**, **12C2** etc. and its corresponding base **10A**, **10B**, **10C** etc. will be represented by a single headset and a single base, hereinafter to be referred to as "headset **12**" and "base **10**" respectively. Additionally, any reference made to the "local telephone line **9**" in any description of the speakerphone **20** or the base handset **112** will be equivalent to "the line selected by

the line select/hold switches and status indicators **38**" in the case of multi-line usage. Also, any reference made to the "local telephone line **9**" in any description of the "headset **12**" will be equivalent to "the line or lines selected on the local network multi-line **5** via the headset multi-line controller **32** and the line coder/decoder **2**", in the case of multi-line usage.

Referring to FIG. **2**, the base **10** includes a speakerphone and a handset **112**. The speakerphone speaker **13** is connected to a speaker amplifier **16** in turn connected to pin c of a local hybrid circuit **18**. The local hybrid **18** is a conventional communications circuit used for connecting a two-way signal source at pin a with two one-way signal sources c and d. FIG. **7** shows a typical version of a hybrid circuit **101** which is conventional and which is applicable to the instant invention. In FIG. **7** the hybrid **101**, shown inside a dashed-line box, consists of a transformer **102** having a primary winding **103** connected via pins a' and a" to a balanced two-way signal source such as a conventional telephone line, a secondary centertapped winding consisting of two balanced half-windings **104'** and **104"** forming a one-way outgoing signal at pin c and receiving a one-way incoming signal at pin d. A line balance **108**, typically consisting of a capacitor and a resistor matching the two-way line in impedance, serves to separate the incoming and outgoing signals. The pin designations of the hybrid **101** are the same as those shown in the other figures. Returning to FIG. **2**, the speakerphone microphone **14** is connected to a microphone amplifier **17**, in turn having its output connected to pin d of the local hybrid **18**. At the two-way pin a (consisting of pins a' and a", but shown as a single pin a for clarity) the local hybrid **18** is connected to the local telephone line **9** through a manually controlled speakerphone on-off hook switch **91**, the handset on-off hook switch **113**, and the normal/intercom mode switch **42** or to the local network multi-line **5** via the line select/hold switches and status indicators **38**. The local hybrid **18** is connected to a local balance **15** serving to balance the local telephone line **9** and the local network multi-line **5**. The local hybrid **18** serves to separate the speakerphone speaker **13** from the speakerphone microphone **14** to minimize acoustic feedback and instability caused by acoustic coupling between them.

A second hybrid, the line hybrid **21**, serves to combine the signals from the base receiver **19** and the base transmitter **24**. The base receiver **19** is connected to the line hybrid one-way input d and the base transmitter **24** is connected to the line hybrid one-way output pin c. The line hybrid **21** is in turn connected at its pin a to the local telephone line **9** via the single/multi-line select switch **45** and the headset line control relay contact **50**, or to the local network multi-line **5** via the single/multi-line select switch **45**, the line coder/decoder **2** and the headset multi-line controller **32**. A line balance **22** provides balance with the impedance of the local telephone line **9** and the local network multi-line **5**. The line hybrid **21** also serves to isolate the radio transmitter **24** from the radio receiver **19** so that feedback through their common antenna **26** is avoided.

The handset **112**, when removed from the handset cradle **114**, is connected to the local telephone line **9** via a conventionnal telephone network **110**, the handset on-off hook switch **113**, and the normal/intercom mode switch **42**, or by the local network multi-line **5** via the line select/hold switches and status indicators **38**.

The base receiver **19** and the base transmitter **24** are tuned to the respective frequencies of the headset transmitter **35** and headset receiver **36**. The headset has an antenna **34** connected to both the headset transmitter **35** and the headset receiver **36**, and a headset battery pack **37** for powering the headset. The headset **12** has two headset disposed battery charging contacts **30** which serve to charge the headset battery when the headset is at rest on the headset cradle **28**, having base disposed battery charging contacts **29** for charging the headset battery, when the headset is at rest thereon. When the headset **12** is removed from the headset cradle **28**, a headset on-off hook switch **27** is closed to activate the base transmitter **24** and the base receiver **19** via lead **27*a***.

The base receiver **19** is connected to the headset line control relay coil **50*a*** and to the headset multi-line controller **32**. When the line select switch **45** is in the "single" position and the base receiver **19** receives a carrier signal from the headset transmitter **35** in headset **12**, the local telephone line **9** is seized via the headset line control relay contacts **50**, activated by the headset line control relay coil **50*a*** via an output from the base receiver **19**. When the line select switch **45** is in the "multi-line" position, and the base receiver **19** receives a carrier signal from the headset transmitter **35** in headset **12**, the local network multi-line **5** is seized via the headset multi-line controller **32** and the line coder/decoder **2** via an output from the base receiver **19**.

The base **10** includes a page oscillator **23** connected with its output to an input of the base transmitter **24** and with its input to a base to headset call button **31**, which, when depressed, activates the page oscillator **23** and the base transmitter **24** to transmit a radio signal to be received by the the headset receiver **36** for alerting a person carrying a headset **12**.

When the normal/intercom mode switch **42** is in the "intercom" mode, and the single/multi-line switch **45** is in the "single" line position, the line hybrid **21** is connected with its two-way pin a to the corresponding pin a of the local hybrid **18** via the single/multi-line switch **45** via the headset line control relay contact **50** via the handset on-off hook switch **113**. When the single/multi-line switch is in the "multi" line position the line hybrid **21** is connected with its two-way pin a to the corresponding pin a of the local hybrid **18** via the line coder/decoder **2**, via the normal/intercom mode switch via the handset on-off hook switch **113**. In this mode, the person carrying a headset can communicate with a person at the base through the circuit formed by the base transmitter **24**, the base receiver **19**, the line hybrid **21**, and the local hybrid **18**, the speaker amplifier **16**, the microphone amplifier **17**, the speakerphone speaker **13**, and microphone **14**, or alternatively via the telephone network **110** and handset **112**. In the intercom mode the local telephone line **9** is disconnected at the normal/intercom mode switch **42**. Any unused local network multi-lines are disconnected at the headset multi-line controller in this and all other modes as well. In the other mode, "Normal", when the single/multi-line select switch **45** is in the single position, the normal/intercom mode switch **42** allows a connection between the local telephone line **9**, pin a of the line hybrid **21** and pin a of the local hybrid **18** or the input of the telephone network **110** so that a person carrying the headset **12** or a person on the speakerphone or handset **112** can converse with a person connected to the telephone line **9** through the exchange **11**.

At least one power supply **41** connected to an outside power source PS provides power to all circuits on the base as well as charge current for charging the headset and the auxiliary battery packs through contacts **29, 30** and **96**.

FIG. **3** shows the front panel of the base **10**, with the headset **12** placed on the headset cradle **28**. The headset microphone **44** is mounted on a swing-out arm **43**, also shown in its inactive position **43'** in dashed lines, the earpiece **52** and a detachable rechargeable battery pack **37**, conveniently attached to the distal end of the head band **48**. FIG. **3** also shows the grille of the speakerphone speaker **13** and the speakerphone microphone **14**, the headset call or page button **31**, the normal/intercom mode switch **38**, the alphanumeric display **40** and a base keypad **86** for dialling a telephone number of a telephone to be called from the base. Additional keys for cancel A3 to temporarily disconnect the line, redial A4 to redial last number dialed, mute A5 to disconnect the headset microphone, and electronic directory/autodialler program mode A6 are also provided. These keys may also be provided on the headset of FIG. **6**. Two charge status indicators **90*a*** and **90*b*** serve to indicate the charge status of an auxiliary battery pack **95** mounted within the auxiliary battery pack charging compartment **107** and the headset battery pack **37** respectively, using well known circuit means.

The handset **112** is seen mounted on the handset cradle **114** at the left hand side of the base **10**.

FIG. **4** shows circuit details of the headset **12**, including the afore-described headset transmitter and receiver **35, 36**; the headset battery pack **37** and the antenna **34**, and furthermore the headset keypad **54** for dialling telephone numbers from the headset and for accessing the electronic directory/autodialler **116** containing memory, display driver and associated electronics, the contents of which may be viewed on the alphanumeric display **97**, a telephone network **62**, which is a conventional network commonly used in cordless telephones, which is used for combining the headset microphone **53**, the headset earpiece **52** and the headset keypad **54**, and which includes the digit-sending circuit that sends the dialled number in either dual-tone multifrequency signals (known as DTMF) or in strings of dial pulses. Such telephone networks are well known and need not be described in more detail since the invention is not directed to this detail. A page oscillator **56** is also shown, having a headset to base page button **58**. The page oscillator **56** serves to generate an audible tone at the base when the headset to base page button **58** is depressed. The page oscillator **56** connected to the headset transsmitter **35** and activates and modulates its RF-carrier so that a corresponding audible tone is heard at the base **10** in the basespeaker **13**, via the base receiver **19**, the line hybrid **21**, the page detect circuit **64**, the local hybrid **18**, the speaker amplifier **16** and the base speaker **13**. A ringing/page tone generator **66** is connected with its input to the headset receiver **36** and with its output to a audio transducer **61**. Audible ringing and page signals are generated either when an incoming ringing signal is received from the local telephone line **9** of the local network multi-line **5** via a ringing detect circuit **63**, seen in FIG. **2**, or when a base to headset page signal is received from the base to headset page button **31** via the base to headset page oscillator **23** having ringing and paging outputs connected to the page transmitter **24**. The ringing detect circuit is adapted to respond to a ringing signal on the local line **9** of the local network multi-line **5** to announce an incoming call. The ringing signal from the ringing detector **63** or a paging signal from the base to headset page oscillator **23** turns on the base transmitter **24** and modulates it with an audible tone so that a corresponding tone is received in the ringing/page tone generator **66** of the headset which in turn energizes the transducer **61** to produce a ringing or paging tone audible to the person carrying the headset **12**. The microphone arm **43** is mechanically linked to a switch **57** which serves to disconnect all the circuits in the headset except the headset receiver **36** and the ringing/page tone generator **66**, when the swing-out microphone arm **43** is swung into its inactive position **43'**, seen in FIG. **3**. The power for the standby ringing operation is provided by a power by-pass link **59** from the headset battery pack **37** to the headset receiver **36**. When the headset receiver **36** receives RF-carrier from the base transmitter **24** and the person at the headset places the microphone swingout arm **43** into the active position, the headset standby-on switch **57** or a transmitter-start signal via lead **36*a*** enables the headset transmitter **35**, which in turn sends its RF-carrier to the base receiver **19** which activates the headset line control relay coil **50*a*** and contacts **50** as described above.

FIG. **5** showns the circuit of the base **10** with some additional details not seen in FIG. **1**. Those details also shown in FIG. **2** have the same reference numbers, and will not be further described in the following. The local telephone line **9** is shown with its two conductors **9'** and **9''** coming from the telephone exchange connected to the line hybrid **21**, pins a' and a'', via the headset line control relay contact **50** connected to the headset line control relay coil **50*a***, which is in turn connected to the base receiver **19**. The base receiver **19** is shown with only a few of its parts since its construction is conventional and well known. The base receiver **19** receives its signal from the base antenna **26** via a tuned circuit **78** connected to the receive circuit **77**, shown symbolically as a transistor, which represents all the circuits normally provided in a radio receiver which are well known. The output of the receive circuit **77** is connected to an audio amplifier **75**, connected to an output transformer **74** connected to the input pin d of the line hybrid **21**. The base receiver **19** has a radio frequency amplifier **76** connected to a rectifier circuit **89**, which is in turn connected to the headset line control relay coil **50*a*** closing the headset line control relay contact **50*a***, when the base receiver **19** receives a radio carrier from the headset transmitter **35**. When the headset line control relay contact **50** closes, a seizure signal, also known as an off-hook signal is sent to the telephone exchange over the line **9'** and **9''**, due to a current loop through the primary winding of the line hybrid **21** being closed, in conventional manner. The exchange sends dial tone, which is transmitted to the headset earpiece **52**. The person at the headset can dial a number from his keypad **54** (FIG. **3**) or access the electronic directory/autodialler **116** to do so, and upon being connected receive ringback tone from the distant dialled party in conventional manner and converse with the party. The voice and call progress tones received from the exchange are separated in the line hybrid **21** and sent, via pin c, to the input of the base transmitter **24** via an input transformer **71** and a transmit amplifier **70** which symbolically represents all the conventional radio frequency amplifiers. An RF-oscillator **68** sends a radio frequency signal to another input of the transmit amplifier **70**. The audio frequency signal modulates the radio

frequency signal in conventional manner, using any one of several well-known modulation methods. The base transmitter out-put stage is shown symbolically as a transistor **73**, driving a tuned antenna circuit **69** coupled to the base antenna **26**.

FIG. **5** also shows the ringing detect circuit **63** and the page detect circuit **64** connected to a ringing/page tone generator **66** coupled to a ringing transducer **67** similar to the ringing/page tone generator **66** and transducer **61** described for the headset circuit. These circuits enable a person at the base to hear incoming ringing and paging tones in order that he may respond by operating either the speakerphone on-off hook switch **91** mounted on the base front panel, or removing the handset **112** from the handset cradle **114** to answer an incoming call. In order to originate an outgoing call the person at the base removes the handset from the handset cradle **114** or engages the speakerphone on-off hook switch **91** into the off hook position and dials the called number on keypad **86** or accesses the electronic directory/autodialer **98** to do so from keypad **86** connected to a telephone network or similar circuit **79**, serving to combine the speaker **13**, the microphone **14** and the keypad **86** in conventional manner.

The base circuit includes at least one power supply **41** described earlier and seen in more detail in FIG. **5**, showing an AC-power transformer **81**, having at least one secondary winding **94** driving at least one rectifier bridge **83**, which supplies power for the base circuit and charging circuit via at least one filter **84**. The battery charging circuit is also arranged to supply charging current to a chargeable auxiliary battery pack **95** conveniently stored in the auxiliary battery pack charging compartment **107** (FIG. **6**), via contacts **29** in the base unit, as seen in FIGS. **2** and **5**.

FIG. **6** is a perspective view of the headset taken from the opposite side of the one shown in FIG. **3**. FIG. **6** shows the headset keypad **54** for dialling called numbers, the alphanumeric display **97**, the base call button **58**, the standby-off switch **105**, the volume control **106**, the standby-on switch **57**, mechanically linked to the swingout microphone arm **43**, and the headset disposed battery pack charging contacts mating with the base disposed battery charging contacts **29** of the cradle **28**, shown only in part in FIG. **6***a*.

FIG. **6***a* is a fragmentary view of the handset disposed battery pack charging contacts **30** in the headset **12** engaging the mating base disposed battery charging contacts **29** in the headset cradle **28**.

I claim:

1. A cordless headset telephone system comprising: at least one headset and at least one base, each including transmitter means and receiver means for providing a two-way cordless transmission between the headset and the base, each headset being balanced and having a minimum inertial moment, and including a curved headband, a quick-disconnect battery pack attached to one end portion of the headband, a single earpiece attached to the other end portion of the headband, and a microphone respectively connected to a headset receiver and a headset transmitter, a forwardly extendable microphone arm having the headset microphone mounted thereon, each base having a base receiver and base transmitter respectively connected to an audio output and an audio input.

2. A cordless headset telephone according to claim **1**, including line connecting means for connecting the base to a telephone line, and telephone number sending means in operative engagement with said telephone line for sending telephone numbers into said line.

3. A cordless headset telephone according to claim **2**, wherein said line connecting means include a line hybrid having a two-way input connected to the telephone line, a one-way input connected to a receiver output, a one-way output connected to a transmitter input, and a line balance connected to the line hybrid for balancing the line impedance.

4. A cordless headset telephone according to claim **2**, including line seizure means for activating the telephone line in the base in response to an output from the base receiver.

5. A cordless headset telephone according to claim **2**, including a ringing detect circuit connected to the telephone line for detecting a ringing signal on the telephone line, the base transmitter having a ringing input connected to the ringing detect circuit for transmitting a ringing indication to the headset receiver, and a ringing transducer in the headset connected to the headset receiver for generating an audible ringing signal from the headset.

6. A cordless headset telephone according to claim **2**, including a keypad in the headset for dialling telephone numbers from the headset, wherein said microphone arm is a microphone swingout arm, a headset standby-on switch linked to the swingout arm for activating the headset transmitter in response to the swingout arm being swung out.

7. A cordless headset telephone according to claim **2**, including a rechargeable battery, detachably connected to the headset for providing its operating power.

8. A cordless headset telephone according to claim **2**, including a call tone generator connected to the headset transmitter and a call button connected to the call tone generator for generating a call tone being audible at the base.

9. A cordless headset telephone according to claim **1** including a cradle disposed at the base for resting the headset thereon, a battery charge circuit disposed at the base, a pair of charge contacts disposed in the cradle connected to the charge circuit, a pair of charge contacts disposed on the headset in mating engagement with the base charge contacts when the headset is placed on the cradle for charging the headset battery pack.

10. A cordless headset telephone according to claim **9** including a base circuit start switch with start circuitry disposed in the base in operative engagement with the base circuit for activating it upon removal of the headset from the bracket.

11. A cordless headset telephone according to claim **2** including a handset connected to the base, normal/intercom switching means having at least a normal state for providing a two-way voice connection between the headset and the telephone line, and an intercom state for providing a two-way voice connection between the headset and the base.

12. A cordless headset telephone according to claim **2**, including a handset connected to the base, a loudspeaker, a microphone, a local hybrid in the base having a two-way voice input connected to the telephone line, a one-way output connected to the loudspeaker and a one-way input connected with the microphone output.

13. A cordless headset telephone according to claim **12**, having a call tone oscillator disposed at the base, and a call button in engagement with the oscillator for generating a call tone being audible at the headset.

14. A cordless headset telephone according to claim 11, including a normal/intercom mode switch in the base in operative engagement with the base circuit for connecting the loudspeaker and the base microphone respectively to the base receiver output and transmitter input, for providing a two-way voice connection between the headset and the telephone line.

15. A cordless handset telephone according to claim 9, including a battery charging compartment connected to the charging circuit, at least one auxiliary battery in mating engagement with the base charge contacts when the auxiliary battery is placed within the auxiliary battery charging compartment for charging the auxiliary battery, said auxiliary battery providing quick battery change capabilities for the headset.

16. A cordless headset telephone according to claim 11, including a handset connected to the base, an electronic directory/autodialler in operative engagement with said telephone number sending means, and telephone memory means connected to said directory/autodialler for dialing telephone numbers into said telephone line, stored in said memory means.

17. A cordless headset telephone according to claim 16, including a keypad connected to said directory/autodialler for entering and editing telephone numbers into said telephone memory means.

18. A cordless headset telephone according to claim 16, including an alphanumberic display for displaying names of parties and their respective telephone numbers stored in said memory means.

19. A cordless headset telephone according to claim 18, having a plurality of buttons in operative engagement with said directory/autodialler, including a redial button for redialing a telephone number, and a cancel button for cancelling a current line connection and reestablishing a new dial tone.

20. A cordless headset telephone according to claim 11, including a mute button in operative engagement with said microphone for providing privacy by muting outgoing audio signals.

21. A cordless headset telephone according to claim 2 including a telephone network in said headset being in operative engagement with said microphone, said earpiece and said number sending means.

22. A cordless headset telephone according to claim 2, having base telephone number sending means disposed in the base for sending telephone numbers into said telephone line.

23. A cordless headset telephone according to claim 22, wherein said base telephone number sending means includes a keypad for DTMF sending.

24. A cordless telephone system according to claim 1, including a headset switch mechanically linked to said microphone arm for disconnecting at least one headset circuit in response to said microphone arm being retracted.

25. A cordless headset telephone system comprising: a plurality of groups of headsets, each group including a respective plurality of headsets, each headset including a single earpiece and a microphone on one end portion of a curved headband having a quick-disconnect battery pack on the other end portion thereof, respectively connected to a headset receiver and a headset transmitter; a plurality of bases equal to said plurality of groups of headsets, each base including a respective base transmitter and base receiver, respectively tuned to the receivers and transmitters of a respective group of headsets, for providing a two-way cordless transmission channel between said base and each of the headsets of said respective group of headsets; and a forwardly extendable microphone arm and a headset switch linked to said microphone arm for disconnecting at least one circuit in said headset when the microphone arm is retracted.

26. A cordless telephone system according to claim 25 wherein said headset includes a curved headband.

* * * * *