EYEWEAR SUPPORTING AFTER-MARKET ELECTRICAL COMPONENTS

CROSS-REFERENCE TO RELATED APPLICATIONS

[0001] This application is a continuation of U.S. Patent Application No. 11/183,269, filed July 15, 2005, and entitled "EYEWEAR SUPPORTING AFTE-MARKET ELECTRICAL COMPONENTS," which is hereby incorporated herein by reference, which in turn is a continuation-in-part of U.S. Patent Application No. 10/964,011, filed October 12, 2004, and entitled "TETHERED ELECTRICAL COMPONENTS FOR EYEGLASSES," now U.S. Patent No. 7,192,136,_which is hereby incorporated herein by reference, which in turn claims priority to each of: (i) U.S. Provisional Patent Application No. 60/509,631, filed October 9, 2003, and entitled "TETHERED ELECTRICAL COMPONENTS FOR EYEGLASSES," which is hereby incorporated herein by reference; (ii) U.S. Provisional Patent Application No. 60/527,565, filed December 8, 2003, and entitled "ADAPTABLE COMMUNICATION TECHNIQUES FOR ELECTRONIC DEVICES," which is hereby incorporated herein by reference; (iii) U.S. Provisional Patent Application No. 60/562,798, filed April 15, 2004, entitled "EYEWEAR WITH ULTRAVIOLET DETECTION SYSTEM," and which is hereby incorporated herein by reference; (iv) U.S. Provisional Patent Application No. 60/583,169, filed June 26, 2004, entitled "ELECTRICAL COMPONENTS FOR USE WITH EYEWEAR, AND METHODS THEREFOR," and which is hereby incorporated herein by reference; (v) U.S. Provisional Patent Application No. 60/592,045, filed July 28, 2004, entitled "EYEGLASSES WITH A CLOCK OR OTHER ELECTRICAL COMPONENT," and which is hereby incorporated herein by reference; and (vi) U.S. Provisional Patent Application No. 60/605,191, filed August 28, 2004, entitled "ELECTRICAL COMPONENTS FOR USE WITH EYEWEAR, AND METHODS THEREFOR," and which is hereby incorporated herein by reference.

[0002] This application, by way of U.S. Patent Application No. 11/183,269, also claims priority to each of: (i) U.S. Provisional Patent Application No. 60/592,045, filed July 28, 2004, entitled "EYEGLASSES WITH A CLOCK OR OTHER

Bose Exhibit 1020
Bose v. IngenioSpec

ELECTRICAL COMPONENT," and which is hereby incorporated herein by reference; (ii) U.S. Provisional Patent Application No. 60/605,191, filed August 28, 2004, entitled "ELECTRICAL COMPONENTS FOR USE WITH EYEWEAR, AND METHODS THEREFOR," and which is hereby incorporated herein by reference; (iii) U.S. Provisional Patent Application No. 60/618,107, filed October 12, 2004, and entitled "TETHERED ELECTRICAL COMPONENTS FOR EYEGLASSES," which is hereby incorporated herein by reference; (iv) U.S. Provisional Patent Application No. 60/620,238, filed October 18, 2004, entitled "EYEGLASSES WITH HEARING ENHANCED AND OTHER AUDIO SIGNAL-GENERATING CAPABILITIES," and which is hereby incorporated herein by reference; (v) U.S. Provisional Patent Application No. 60/647,836, filed January 31, 2005, and entitled "EYEGLASSES WITH HEART RATE MONITOR," which is hereby incorporated herein by reference; and (vi) U.S. Provisional Patent Application No. 60/647,826, filed January 31, 2005, and entitled "EYEWEAR WITH ELECTRICAL COMPONENTS," which is hereby incorporated herein by reference.

[0003] In addition, this application is related to each of: (i) U.S. Patent Application 10/822,218, filed April 12, 2004, and entitled "EYEGLASSES FOR WIRELESS COMMUNICATIONS," which is hereby incorporated herein by reference; (ii) U.S. Patent Application No. 10/964,011, filed October 12, 2004, and entitled "TETHERED ELECTRICAL COMPONENTS FOR EYEGLASSES," which is hereby incorporated herein by reference; (iii) U.S. Patent Application No. 11/006,343, filed December 7, 2004, and entitled "ADAPTABLE COMMUNICATION TECHNIQUES FOR ELECTRONIC DEVICES," which is hereby incorporated herein by reference; (iv) U.S. Patent Application No. 11/078,855, filed March 11, 2005, and entitled "EYEWEAR WITH RADIATION DETECTION SYSTEM," which is hereby incorporated herein by reference; (v) U.S. Patent Application No. 11/078,857, filed March 11, 2005, and entitled "RADIATION MONITORING SYSTEM," which is hereby incorporated herein by reference; (vi) U.S. Patent Application No. 11/183,283, filed July 15, 2005, and entitled "EVENT EYEGLASSES," which is hereby incorporated herein by reference; (vii) U.S. Patent Application No. 11/183,262, filed July 15, 2005,

and entitled “EYEGLASSES WITH HEARING ENHANCED AND OTHER AUDIO SIGNAL-GENERATING CAPABILITIES,” which is hereby incorporated herein by reference; (viii) U.S. Patent Application No. 11/183,256, filed July 15, 2005, and entitled “EYEGLASSES WITH ELECTRICAL COMPONENTS,” which is hereby incorporated herein by reference; (ix) U.S. Patent Application No. 11/183,263, filed July 15, 2005, and entitled “EYEGLASSES WITH A CLOCK OR OTHER ELECTRICAL COMPONENT,” which is hereby incorporated herein by reference; and (x) U.S. Patent Application No. 11/183,276, filed July 15, 2005, now U.S. Patent No. 7,255,437, and entitled “EYEGLASSES WITH ACTIVITY MONITORING,” which is hereby incorporated herein by reference.-

BACKGROUND OF THE INVENTION

[0004] Traditionally, eyeglasses have not contained or made any use of electrical components. In recent years, attempts to include electrical components within eyeglasses have had limited success. Even incorporating a small electrical component, such as a microphone, into an eyeglass frame may not be a simple task because, for example, of the necessary electrical connections with the electrical component. Clearly, larger scale electrical components would be more difficult to be provided in or attached to eyeglass frames. Many eyeglasses frames tend to be very compact and lightweight and thus may not have a lot of space for electrical components. Moreover, since eyeglass frames are often fashionable items whose designs are important, there are substantial design tradeoffs involved with providing or attaching electrical components to eyeglass frames.

[0005] Even if electrical components are provided in an eyeglass frame, the ability to alter or change electrical components is problematic. Conventionally, once an eyeglass frame is manufactured, electrical components embedded in the eyeglass frame may not be removed, nor can addition electrical components be added into the eyeglass frame. Attachment of electrical components to eyeglass frames has not proven to be reliable, design friendly or commercially successful.

[0006] Hence, there is a need for improved approaches to facilitate modifications or alterations to electrical components used with eyeglasses.

SUMMARY OF THE INVENTION

[0007] Generally speaking, the invention pertains to techniques for providing eyewear with electrical components. The electrical components can provide electrical technology to eyewear (e.g., eyeglasses) without having to substantially compromise aesthetic design principles of the eyewear. Often, the electrical components can be attached to the eyewear as an after-market enhancement. The electrical components can operate independently or together with other electrical components provided elsewhere.

[0008] One aspect of the invention relates to temple arrangements for use with eyeglasses. According to this aspect, a temple arrangement includes one or more electrical components. The one or more electrical components are attached to or at least partially embedded in the temple arrangement.

[0009] Another aspect of the invention relates to a temple adapter for use with eyeglasses. According to this aspect, a temple adapter includes one or more electrical components that are able to be mechanically (and optionally electrically) coupled to a temple (including a temple tip) of the eyeglasses.

[0010] The electrical components can support signal capturing, signal processing, signal transmission, signal display, signal storage and/or power provision. The signals can be, for example, analog or digital signals. The electrical components can, for example, be used to provide audio output and/or audio pick-up. The electrical components may include and/or control one or more sensors to monitor and/or signal the conditions of a user of the eyewear. The electrical components may also include and/or control one or more operation indicators to signal operational status of at least some other electrical components. In addition, the electrical components can be or pertain to a circuit board or module, which includes a plurality of electrical components.

[0011] In one embodiment, the one or more electrical components support audio capabilities allowing a user to hear audio output. In another embodiment, the

one or more electrical components support communication capabilities allowing a user to communicate with a communication device in a hands-free manner.

[0012] The invention can be implemented in numerous ways, including a method, system, device, apparatus, and a computer readable medium. Several embodiments of the invention are discussed below.

[0013] As an eyewear frame, one embodiment can, for example, include at least: a first temple having a first end and a second end, with the second end having a first temple arrangement coupled to at least a portion of the second end of the first temple; a second temple having a first end and a second end, with the second end having a second temple arrangement coupled to at least a portion of the second end of the second temple; an electronic device at least partially embedded in one of the temple arrangements; and another electronic device physically separated from the first and second temple arrangements yet internal to said eyewear frame and operatively interconnected with the electronic device.

[0014] As a pair of glasses, one embodiment can, for example, include at least: a pair of temples, each of the temples having a rearward portion that fits over an ear of a person when the pair of glasses is being worn by the person; a temple arrangement provided at the rearward portion of one of the temples, wherein the temple arrangement includes at least one electronic device, the at least one electronic device being embedded in the temple arrangement; and another electronic device physically separated from the temple arrangement yet embedded in said pair of glasses and operatively interconnected with the at least one electronic device.

[0015] Other aspects and advantages of the invention will become apparent from the following detailed description taken in conjunction with the accompanying drawings which illustrate, by way of example, the principles of the invention.

BRIEF DESCRIPTION OF THE DRAWINGS

[0016] The invention will be readily understood by the following detailed description in conjunction with the accompanying drawings, wherein like reference numerals designate like structural elements, and in which:

[0017] FIG. 1 is a perspective view of a pair of glasses according to one embodiment of the invention.

[0018] FIG. 2 illustrates a diagram of a number of different embodiments of temple arrangements according to the invention.

[0019] FIG. 3A is a diagram of a temple arrangement according to one embodiment of the invention.

[0020] FIG. 3B is a diagram of a temple cover that at least partially covers a temple (e.g., temple and/or temple tip) according to one embodiment of the invention.

[0021] FIG. 3C is a diagram of a fit-over temple that at least partially fits over a temple (e.g., temple and/or temple tip) according to one embodiment of the invention.

[0022] FIG. 3D and 3E are diagrams of a temple arrangement according to another embodiment of the invention.

[0023] FIG. 4 shows examples of different electrical components according to the invention.

[0024] FIG. 5 is a chart that depicts examples of sensors suitable for use according to the invention.

[0025] FIG. 6 illustrates a diagram of a number of different embodiments of temple adapters according to the invention.

[0026] FIG. 7A is a diagram of a temple adapter according to one embodiment of the invention.

[0027] FIG. 7B is a diagram of a temple adapter according to another embodiment of the invention.

[0028] FIGs. 8A and 8B are diagrams of a temple adapter according to another embodiment of the invention.

[0029] FIG. 9A is a diagram of a temple adapter according to one embodiment of the invention.

[0030] FIGs. 9B and 9C are diagrams of a temple adapter according to another embodiment of the invention.

[0031] FIG. 9D is a diagram of a temple adapter according to still another embodiment of the invention.

[0032] FIGs. 10A-10C are diagrams of a temple having a bone conducting element according to still other embodiments of the invention.

DETAILED DESCRIPTION OF THE INVENTION

[0033] The invention pertains to techniques for providing eyewear with electrical components. The electrical components can provide electrical technology to eyewear (e.g., eyeglasses) without having to substantially compromise aesthetic design principles of the eyewear. Often, the electrical components can be attached to the eyewear as an after-market enhancement. The electrical components can operate independently or together with other electrical components provided elsewhere.

[0034] One aspect of the invention relates to temple arrangements for use with eyeglasses. According to this aspect, a temple arrangement includes one or more electrical components. The one or more electrical components are attached to or at least partially embedded in the temple arrangement.

[0035] Another aspect of the invention relates to a temple adapter for use with eyeglasses. According to this aspect, a temple adapter includes one or more electrical components that are able to be mechanically (and optionally electrically) coupled to a temple (including a temple tip) of the eyeglasses.

[0036] The electrical components can support signal capturing, signal processing, signal transmission, signal display, signal storage and/or power provision. The signals can be, for example, analog or digital signals. The electrical components can, for example, be used to provide audio output and/or audio pick-up. The electrical components may include and/or control one or more sensors to monitor and/or signal the conditions of a user of the eyewear. The electrical components may also include and/or control one or more operation indicators to signal operational status of at least some other electrical components. In addition, the electrical components can be or pertain to a circuit board or module, which includes a plurality of electrical components.

[0037] In one embodiment, the one or more electrical components support audio capabilities allowing a user to hear audio output. In another embodiment, the

one or more electrical components support communication capabilities allowing a user to communicate with a communication device in a hands-free manner.

[0038] Embodiments of different aspects of the invention are discussed below with reference to FIGs. 1 – 10C. However, those skilled in the art will readily appreciate that the detailed description given herein with respect to these figures is for explanatory purposes as the invention extends beyond these limited embodiments.

[0039] FIG. 1 is a perspective view of a pair of glasses 100 according to one embodiment of the invention. The glasses 100 include a frame and a pair of lenses 102. The frame has lens holders 104 that hold the lenses 102 in position. The frame also has a bridge 106. The glasses 100 further include a pair of temples (or arms) 108. The temples 108 are considered part of the frame. As shown in FIG. 1, each of the temples 108 is coupled to one of the lens holders 104 by a hinge 109. In one embodiment, the temples 108 can be removed from the frame (e.g., at the hinge 109).

[0040] In addition, temple arrangements 110 are attached to the temples 108. Here, one or both of the temples 108 can include a temple arrangement 110. A temple arrangement 110 can include one or more electrical components 112. In one embodiment, the temple arrangements 110 can be considered separate parts that can be attached to respective temples 108. Once attached, the temple arrangements 110 can be considered part of, or an extension to, the temples 108.

[0041] By having one or more electrical components 112 in one or more of the temple arrangements 110, electrical capabilities can be provided to the glasses 100 without burdensome impact to the design of other parts of the frames. Moreover, by providing electrical components in one or more of the temple arrangements 112, electrical capabilities can be added to eyeglasses in an after-market manner. Still further, by replacing temple arrangements, a user could alter the electrical capabilities of his eyeglasses.

[0042] In one embodiment, the glasses 100 do not have any other embedded electrical components, such as within the frame, except those in one or both of the temple arrangements 112. In another embodiment, the glasses 100 include one or more other electrical components embedded or attached to the frame of the glasses 100 and the components are electrically coupled to the one or more electrical components 112 in one or both of the temple arrangements 110.

[0043] In different embodiments, the glasses 100 can be, for example, a pair of sunglasses, fit-over glasses, prescription glasses, reading glasses, or safety glasses.

[0044] FIG. 2 illustrates a diagram of a number of different embodiments of temple arrangements 200 according to the invention. A temple arrangement 200 can be a temple tip, a temple fit-over, or a temple cover. In one embodiment, a temple tip is a structure that attaches to a rearward portion of a temple. In one embodiment, a temple tip can pertain to an enclosure that grabs onto a rearward portion of a temple. A temple tip is particularly common for wire frame eyeglass where the temple tip attaches to the rearward end of the temple and provides a surface suitable for positioning proximate to the user's ear. For example, FIG. 1 illustrates the temple arrangement 112 implemented as a temple tip.

[0045] In one embodiment, a temple tip is removable from its corresponding temple so that it can be replaced. The temple tip can be originally provided with the purchase of a pair of eyeglasses. Alternatively, the temple tip can be a replacement part that can be purchased separately and subsequently mounted onto a rearward portion of a temple of a pair of eyeglasses after removing any original temple tip. In another embodiment, a temple tip is permanently held onto the corresponding temple, for example, by an adhesive (e.g., epoxy, glue, etc.).

[0046] In one embodiment, a temple fit-over fits over at least a portion of the rearward end of a temple. If the rearward end of the temple has a temple tip, at least a portion of the temple tip can be fitted over by the temple fit-over. In one embodiment, a temple cover slides over and at least partially covers a portion of the

rearward end of a temple. If the rearward end of the temple has a temple tip, at least a portion of the temple tip can be covered by the temple cover.

[0047] A temple cover is typically made of a material that is more flexible than a temple fit-over. For example, a temple cover can be made of a fabric or other materials, such as a sock or sleeve; while a temple fit-over can be made of plastic.

[0048] A temple arrangement 200 can be made of the same or different materials than the temple or other parts of the frame of the pair of eyeglasses. To illustrate, a pair of glasses with a metal frame can have non-metallic temple tips. A temple arrangement 200 can be of a color that is the same as, or similar to, or different from, that of the temple.

[0049] A temple arrangement 200 can be held onto a temple by frictional force. For example, if the temple arrangement 200 is a temple fit-over, it can be held onto an existing temple or temple tip by frictional force. Here, the temple fit-over is often removable. In another embodiment, the temple arrangement 200 can be permanently held onto its corresponding temple or temple tip. For example, the temple arrangement can be permanently held onto the corresponding temple or temple tip, for example, by an adhesive (e.g., epoxy, glue, etc.).

[0050] Depending on applications, a temple arrangement can be of different shapes. The shape can depend on the type of glasses. For example, a temple arrangement for fit-over glasses can be bigger than a temple arrangement for prescription glasses. The shape of the temple arrangement can also depend on applications for the electronic component(s) that are fully or partially embedded in the temple arrangement. Of course, aesthetic reasons can also influence shape (e.g., design, size, style) of a temple arrangement.

[0051] In one embodiment, the temple arrangement is a structure that has at least one electrical component attached thereto or at least partially embedded therein. In another embodiment, all of the electrical components to be provided with the temple arrangement are at least partially embedded in the temple arrangement.

[0052] FIG. 3A is a diagram of a portion 300 of a pair of eyeglasses according to one embodiment of the invention. The portion 300 includes a temple 302 that is associated with a pair of eyeglasses. Over the end of the temple 302 that is opposite the associated lens holder, a temple tip 304 is provided. The temple tip 304 can, for example, be held to the temple 302 by frictional forces and/or adhesive. The temple tip 304 includes at least one electrical component 306 that is at least partially embedded therein. A wide range of functionalities can be provided by the at least one electrical component 306. The temple tip 304 can be considered separate from or part of the temple 302. For example, when the temple tip 304 is not attached to the temple 302, the temple tip 304 is considered a separate part. As another example, when the temple tip 304 is attached to the temple 302, the temple tip 304 can be considered separate from or part of the temple 302.

[0053] The temple tip 304 can be manufactured and delivered to resellers or retailers and thereafter sold attached to eyeglasses. Alternatively, the temple tip 304 can be separately provided as an optional replacement temple tip for an original temple tip. Hence, after or during purchasing a pair of eyeglasses, upgrade of the eyeglasses can be had by replacing an existing temple tip with a replacement temple tip. The colors and shapes of the temple tip 304 can vary widely. In the after manufacturing environment, the reseller or retailer can be provided with a range of different colors and shapes so that a user can receive a replacement temple tip that reasonably matches the color and shape of the temple or that provides an altered appearance as desired by the user.

[0054] A number of embodiments have been described regarding one or more electrical components at least partially embedded in a pair of glasses. In one embodiment, one or more electrical components are at least partially embedded in a temple tip of a pair of glasses. Temple tips are relatively common for wire or metal frames which have wire or metal temples. The pair of glasses has a first and a second lens holders for receiving lenses. Each of the lens holders has a first side and a second side. The pair of glasses has a bridge element that couples the first

side of the first lens holder to the second side of the second lens holder. The pair of glasses also includes a first temple and a second temple. The first temple is pivotally secured to the second side of the first lens holder through a joint, while the second temple is pivotally secured to the first side of the second lens holder through another joint. A temple typically has two ends, a first end and a second end. The first end can be the end that is pivotally secured to a lens holder through a joint, and the second end can be the other end of the temple. It is not uncommon that a temple includes a main body and an enclosure that grabs onto the main body of the temple. The second end is typically where the enclosure grabs onto the main body. The enclosure can be made of a different material than the main body of the temple. In one embodiment, such an enclosure is a temple tip, and there is an electrical component, partially or fully, embedded in the temple tip. There can also be a connector at the temple tip. In another embodiment, the temple tip can include a female connector. In still another embodiment, as a temple tip grabs onto the main body of the temple, a connector at the temple tip (such as a female connector) can make electrical contact with another connector (such as a male connector) at the main body of the temple. Typically, particularly before a pair of glasses has been extensively worn, the temple tip can be removed and re-inserted back on to the main body of the temple without much difficulty. Such a temple tip can be an after-market component, with different temple tips having different electrical components to serve different functions.

[0055] Besides a temple tip such as illustrated in FIG. 3A, a temple tip can also be effectively modified by a fit-over temple or temple cover.

[0056] FIG. 3B is a diagram of a temple cover 320 that at least partially covers a temple (e.g., temple and/or temple tip) according to one embodiment of the invention. As an example, the temple cover 320 can be made of a fabric or other material, such as a sock or sleeve, that slides over and at least partially covers a temple or a temple tip. The temple cover 320 can include at least one electrical component 322 that is either attached thereto or at least partially embedded therein.

The temple cover 320 can also include an opening 324 so as to receive a temple or a temple tip. In one embodiment, the temple cover 320 is placed over a substantial portion of a temple tip, and the opening 324 can extend to a far end 326 so as to receive all or a substantial part of the temple tip. The temple cover 320 can, for example, be held to a temple or a temple tip by frictional forces and/or adhesive.

[0057] FIG. 3C is a diagram of a fit-over temple 340 that at least partially fits over a temple (e.g., temple and/or temple tip) according to one embodiment of the invention. For example, the fit-over temple 340 can at least partially fit-over a temple tip. The fit-over temple 340 includes at least one electrical component 342 that is either attached thereto or at least partially embedded therein. The fit-over temple 340 can also include an opening 344 so as to receive a temple or a temple tip. The depth and/or width of the opening 344 within the fit-over temple 340 can vary depending on the extent to which it is being fit over a temple or a temple tip. The fit-over temple 340 can, for example, be held to a temple or temple tip by frictional forces and/or adhesive. As an example, the fit-over temple 340 can be plastic or other material. The colors and shapes of the fit-over temple 340 can have a lot of variations.

[0058] A wide range of functionalities can be provided by the at least one electrical component (e.g., electrical component 322 and 342). In the after manufacturing environment, the reseller or retailer can be provided with a range of different colors and shapes so that a user can receive a replacement temple cover or fit-over temple that reasonably matches the color and shape of the temple or that provides an altered appearance as desired by the user.

[0059] FIG. 3D and 3E are diagrams of a temple arrangement 360 according to another embodiment of the invention. FIG. 3D is a side view of the temple arrangement 360, and FIG. 3E is a front view of the temple arrangement 360. In this embodiment, the temple arrangement 360 is a temple tip that can be attached to a temple (e.g., temple body) of a pair of eyeglasses. The temple arrangement 360 includes a speaker housing 362 allowing a speaker 364 to be at least partially

embedded within the temple arrangement 360. An audio sound output by the speaker 364 is coupled to an ear plug 366 by way of the speaker housing 362 and a tube 368. Typically, the tube 368 is a flexible tube, such as a flexible plastic tube. A user of the eyeglasses having the temple arrangement 360 can place the ear plug 366 within her ear to facilitate coupling of the audio sound from the speaker 364 to the ear. The tube 368 can have a disconnection region 370 whereby at least a section of the tube 368 and the attached ear plug 366 can be removed from the temple arrangement 360, such as when audio output is not being listened to. The tube 368 and/or the speaker housing 362 can also be capable of rotating with respect to the temple arrangement 360 to facilitate ease of use. Still further, the temple arrangement 360 can include a connector 372, such as a male audio connector (e.g., 2.5 mm, stereo mini-phone connector). The connector 372 provides a means to electrically connect an external audio source to the speaker 364 within the temple arrangement 360. For example, at least one wire (not shown) that is internal to the temple arrangement 360 can be used to electrically connect the speaker 364 to the connector 372.

[0060] In one embodiment, an electrical component is a component of an electrical circuit or system, and the electrical circuit or system is for performing at least a desired, intended or predetermined function.

[0061] In one embodiment, a temple tip, fit-over temple or temple cover according to the invention can further include a connector or cable to facilitate electrical connection with the at least one electrical component that is either attached to a temple or a temple tip or at least partially embedded therein.

[0062] FIG. 4 shows examples of different electrical components according to the present invention. Different embodiments of temple arrangements or temple adapters according to the invention can use one or more of these different electrical components.

[0063] In one embodiment, the electrical component is an electrical connector. The connector can be a male connector located at a temple tip. In

another embodiment, the connector can be a female connector at a temple tip. For example, as a temple tip grabs onto the main body of its corresponding temple, a female connector at the temple tip can make electrical contact with a male connector at the temple. Examples of different types of connectors have previously been described in the related patent applications, which have been incorporated by reference.

[0064] In one embodiment, the embedded electrical component is an electrical switch, such as one or more of those previously described in the related patent applications, which have been incorporated by reference.

[0065] In one embodiment, one electrical component can be a power source. The power source can be a battery, a solar cell or other type of power source.

[0066] In one embodiment, one electrical component can include a circuit board. The circuit board can be a rigid or a flexible circuit board.

[0067] In one embodiment, one electrical component can be an indicator. The indicator can be audio, visual, or physical (e.g., vibration). For example, the indicator can signal an event or condition to a user of the glasses.

[0068] In one embodiment, one electrical component can be a display, such as a LCD display.

[0069] In one embodiment, one electrical component can be a speaker. The speaker can provide an audio output for the benefit of the wearer of the glasses. The speaker can directly transmit sound to a user, such as a speaker mounted on an exterior surface of an eyeglass frame, or partially or fully embedded in an eyeglass frame, or a bone conducting type of speaker. Alternatively, the speaker can indirectly transmit sound to a user, such as through the use of a tube to deliver audio output proximate to a user's ear.

[0070] In one embodiment, one electrical component can be a controller. The controller can, for example, be a microprocessor.

[0071] In one embodiment, one electrical component can be a memory device. The memory device can be non-volatile memory, such as FLASH memory. The data stored in the memory device can be user data or data provided by other electrical components.

[0072] In one embodiment, one electrical component is a frequency receiver or a frequency transmitter. They can be in the radio frequency range.

[0073] In one embodiment, one electrical component can be a sensor. The sensor can be a temperature sensor. The temperature sensor can be used to sense the temperature of the wearer. In one embodiment, such a temperature sensor is in a temple tip. In measuring the temperature, the user can further press the temple tip towards his head to ensure better connection. One can also put the temple under one's tongue to measure body temperature.

[0074] In other different embodiments, one electrical component can be a motion detector, a speed sensor, a rate of ascent (or descent) detector, a pressure detector, or a detector for radiation, such as an ultraviolet (UV) detector.

[0075] In one embodiment, one electrical component is a radio frequency identification (RFID) tag. A RFID tag typically includes a memory chip and a radio antenna. The memory chip usually has a small storage capacity and thus does not include a large amount of information. A portion of such information can provide identifying information for the glasses. The memory chip may only have a few kilobytes, sufficient to encode information, such as a serial number, where and when the product (such as eyeglasses) was manufactured, and other relevant information.

[0076] The RFID tags can come in a number of configurations. For example, an active tag uses a battery-powered transponder to constantly emit signals which can carry information programmed into the memory chip. Active tags are more applicable to situations where readers are not close to the tags. A semi-passive tag likewise has a battery, but may not be activated until it receives a signal from a reader. They are more applicable to situations that do not need continuous connection and accessing. A passive tag has no battery; its antenna extracts power

from a reader's radio wave signal to transmit the identifying information. Passive tags are typically relatively inexpensive, but may have to be within a few feet of a reader to extract power. The electrical component can be a passive RFID tag, or some other type of tag.

[0077] In one embodiment, one electrical component can be for locating the corresponding glasses. For example, the electrical component can produce a beeping tone when it receives a specific radio signal. A handheld device (such as a key chain accessory, can generate the specific radio signal (e.g., when a button is pushed). Through the beeping tone, one can locate the glasses.

[0078] As noted above, in one embodiment, the electrical component can be a sensor. More generally, a pair of glasses can include one or more sensors that can be used individually or in combination. FIG. 5 is a chart 500 that depicts examples of sensors suitable for use in or attached to the glasses.

[0079] In one embodiment, the sensor is a "being worn" sensor. The "being worn" sensor indicates whether the glasses are being worn by its user. The "being worn" operation can be performed using, for example, a thermal sensor, a motion detector, a stress sensor or a switch.

[0080] In one embodiment, a motion detector is used as a "being worn" sensor. A threshold can be set, such that if the amount of motion exceeds the threshold, the glasses are assumed to be worn. The motion detector can, for example, be achieved by a mechanical mechanism or an accelerometer.

[0081] In another embodiment, the "being worn" sensor includes two thermal sensors. One sensor can be at approximately the middle of a temple, such as in a region that touches the head of the user wearing the glasses. The other sensor can be at one end of the temple, the end that is close to its hinge. If the temperature differential between the two sensors is beyond a certain preset value, the glasses would be assumed to be worn. The differential is presumed to be caused by a person wearing the pair of glasses.

[0082] In yet another embodiment, the "being worn" sensor includes a stress sensor at the hinge of the temple. The assumption is that when the eyewear is worn, the hinge is typically slightly stretched because typically, the width of the head of the user is slightly wider than the width between the temples when the two temples are in the extended positions. If the value of the stress sensor is beyond a certain preset value, the glasses would be assumed to be worn.

[0083] In a further embodiment, the "being worn" sensor can be a switch. For example, at the hinge between a temple and its corresponding lens holder, there is a switch. When that temple is in its extended position, i.e., fully extended outwards, the switch is turned on. The switch can be a pin-type switch. When the temple is fully extended outwards, the pin is pressed. When both temples are fully extended outwards, in one embodiment, the glasses would be assumed to be worn by the user.

[0084] In one embodiment, another type of sensor is an environmental sensor. The environmental sensor can sense environmental conditions, such as one or more of radiation (e.g., ultraviolet radiation or light), temperature (e.g., ambient temperature), pressure, humidity and toxins (e.g., chemicals, etc.).

[0085] In another embodiment, another type of sensor is a condition sensor. The condition sensor can sense the conditions of the user of the glasses. Examples of condition sensors include sensing one or more of distance traveled, location, speed, calories consumed, temperature and vital signs associated with the user of the glasses. The distance traveled could represent the horizontal distance traveled or the vertical distance (i.e., elevation) traveled. The speed can be the rate of movement along the horizontal distance traveled and/or the vertical distance. In yet another embodiment, the condition sensor can indirectly sense emotional conditions of the user of the glasses.

[0086] The sensors can be provided in a redundant or fault-tolerant manner. For example, sensors can come in pairs in the glasses. When one malfunctions, the other one will take over its operation. In another embodiment, the sensor

information can be processed in a differential manner to examine changes to the sensor information. The differential can be based on time. The sensors can by powered by a battery, solar energy, or kinetic energy. For reduced power consumption, the sensors can remain in a low-power state unless data is being acquired by the sensors. In yet another embodiment, two or more of the sensors can communicate with one another (wired or wirelessly) to exchange data or control information.

[0087] FIG. 6 illustrates a diagram of a number of different embodiments of temple adapters 600 according to the invention. The temple adapters 600 serve to adapt a temple (i.e., a temple body or temple tip) of a pair of eyeglasses to provide for at least one electrical component. In one embodiment, a temple adapter can clip onto a temple body or a temple tip. In another embodiment, a temple adapter can mount to a post provided on a temple body or a temple tip. In still another embodiment, a temple adapter can mount to a hole provided in a temple body or a temple tip. In yet another embodiment, a temple adapter can be bonded (or adhered) to a temple body or a temple tip.

[0088] The temple adapter is particularly well suited to adapt a pair of eyeglasses with communication components, such as a speaker and/or a microphone. As an example, a standard pair of eyeglasses can be transformed into an operational headset by attaching a temple adapter to a temple body or temple tip of the pair of eyeglasses, wherein the temple adapter includes at least one speaker and at least one microphone.

[0089] The temple adapter can be rigid or malleable. The benefit of being malleable is that the particular geometric arrangement/assembly of the temple adapter can be altered by its user for better user comfort or operation.

[0090] In one embodiment, the temple adapter is a structure that has at least one electrical component attached thereto or at least partially embedded therein. In another embodiment, all of the electrical components to be provided with the temple adapter are at least partially embedded in the temple adapter.

[0091] FIG. 7A is a diagram of a temple adapter 700 according to one embodiment of the invention. The temple adapter 700 attaches to a temple 702 (including any temple tip using a clip 704. The clip 704 can use force, such as an interference fit force or spring-induced force, to attach the temple adapter 700 to the temple 702. Besides the clip 704, the temple adapter 700 includes an angled arm 706 and an ear bud 708. The angled arm 706 can be malleable. When a pair of eyeglasses associated with the temple 702 is being worn by a user, the ear bud 708 can be placed in or near the user's ear canal. The ear bud 708 contains a speaker and receives electrical signals via a wire, such wire can be provided internal or external to the temple adapter 700 and can originate at the temple 702 or external to the temple 702.

[0092] FIG. 7B is a diagram of a temple adapter 720 according to another embodiment of the invention. The temple adapter 720 attaches to a temple 722 (including any temple tip) using a clip 724. The clip 724 can use force, such as an interference fit force or spring-induced force, to hold the temple adapter 720 to the temple 722. Besides the clip 724, the temple adapter 720 includes an angled arm 726, an ear bud 728, a microphone 730, an extension arm 732 and a cord 734. In this embodiment, the cord 734 includes a wire that connects to the speaker within the ear bud 728 and another wire that connects to the microphone 730. There can be one or more conductors inside a given wire. For example, a wire might have one conductor serving as a signal line and another conductor serving as ground. Such wires can be provided internal to the extension arm 732 and the angled arm 726. The arm 732 can serve to guide the cord 734 away from the user's ear or rearward. The angled arm 726 can be malleable. The placement or position of the microphone 730 can vary with implementation. As shown in FIG. 7B, the microphone 730 is directed forward to a user's front when a pair of eyeglasses associated with the temple 722 are being worn. Alternatively, the microphone 730 could be directed outward away from the user's head when the pair of eyeglasses are being worn. When a pair of eyeglasses associated with the temple 722 is being worn by a user, the ear bud 728 can be placed in or near the user's ear canal. The ear bud 728

contains a speaker and receives electrical signals via a wire of the cord 734. The cord 734 can have another end (not shown) with a connector for coupling with an audio output device (e.g., radio, MP3 player) or a communication device (e.g., mobile phone).

[0093] FIGs. 8A and 8B are diagrams of a temple adapter 800 according to another embodiment of the invention. FIG. 8A is a side view of the temple adapter 800, and FIG. 8B is a front view of the temple adapter 800. The temple adapter 800 has a support body 802 which has a support arm 803. An ear bud 804 is attached to an end of the support arm 803. A connector 806, such as a male audio connector, is attached to one end of the support body 802. A microphone 808 can be optionally provided and attached to the support body 802 or the support arm 803. Additionally, an elastic member 810 can be provided to facilitate attachment of the support body 802 to a temple 812 of a pair of eyeglasses. The temple 812 can have a tip region 814, which can be referred to as a temple tip. When the temple adapter 800 is attached to the tip region 814 of the temple 812, the tip region 814 is placed in or through an opening 816 in the elastic member 810, as shown, for example, in FIG. 8B. The temple adapter 800 is thereby held in place relative to the tip region 814. Additionally, although not shown, the support body 802 would carry a first internal wire from the connector 806 to the microphone 808, and the support body 802 and the support arm 803 would carry a second internal wire from the connector 806 to the ear bud 804.

[0094] FIG. 9A is a diagram of a temple adapter 900 according to another embodiment of the invention. In FIG. 9A, a side-view of the temple adapter 900 is depicted. The temple adapter 900 attaches to a temple 902 of a pair of eyeglasses. The temple 902 can have a tip region 904, which can be referred to as a temple tip. The temple adapter 900 has a support member 906. A first end 908 of the support member 906 couples to the temple 902 of a pair of eyeglasses. In one embodiment, the first end 908 serves to attach the temple adapter 900 to the temple 902. For example, the first end 908 can provide a clip, clamp, post, or hole to provide or

assist with the attachment. As another example, the first end 908 can alternatively or additionally use an adhesive, bonding or fastener (e.g., hook and loop system, e.g., Velcro) to provide or assist with the attachment. A second end 910 of the support member 906 provides an opening through which an arm 912 extends. One end of the arm 912 has an ear bud 914 attached thereto. The arm 912 can be angled and/or malleable. When a pair of eyeglasses associated with the temple 902 is being worn by a user, the ear bud 914 can be placed in or near the user's ear canal. The ear bud 914 contains a speaker and receives electrical signals via a wire, such wire can be provided internal or external to the temple adapter 900 and can originate at the temple 902 or external to the temple 902.

[0095] FIGs. 9B and 9C are diagrams of a temple adapter 920 according to still another embodiment of the invention. FIG. 9B is a side view of the temple adapter 920, and FIG. 9C is a front view of the temple adapter 920. The temple adapter 920 attaches to a temple 922 of a pair of eyeglasses. The temple 922 can have a tip region 924, which can be referred to as a temple tip. The temple adapter 920 has a support member 926. A first end 928 of the support member 926 couples to the temple 922 of a pair of eyeglasses. In one embodiment, the first end 928 serves to attach the temple adapter 920 to the temple 922. For example, the first end 928 can provide a clip, clamp, post, or hole to provide or assist with the attachment. As another example, the first end 928 can alternatively or additionally use an adhesive, bonding or fastener (e.g., hook and loop system, e.g., Velcro) to provide or assist with the attachment. The first end 928 also has a bracket 930 having a connector 932 at one end, and an elastic member 934 for coupling about the tip region 924. The connector 932, such as a male audio connector, is attached to one end of the bracket 930. A microphone 936 can be optionally provided and, for example, attached to the support body 926.

[0096] A second end 938 of the support member 926 provides an opening through which an arm 940 extends. One end of the arm 940 has an ear bud 942 attached thereto. The arm 940 can be angled and/or malleable. The arm 940 is

also re-positionable within the opening at the second end 938 so as to permit user adjustment. When a pair of eyeglasses associated with the temple 922 is being worn by a user, the ear bud 942 can be placed in or near the user's ear canal. The ear bud 942 contains a speaker and receives electrical signals via a wire, such wire can be provided internal or external to the temple adapter 920 and can originate at the temple 902 or external to the temple 902. In this embodiment, a wire 944 is shown as passing through the arm 940 to provide signals to the speaker within the ear bud 942. More particularly, in one embodiment, although not shown in FIGs. 9B and 9C, a first wire would connect the speaker within the ear bud 942 to the connector 932 (e.g., wire 944), and a second wire would connect the microphone 936 to the connector 932. Such wires can be internal or external, or partially internal and partially external, to the temple adapter 920.

[0097] FIG. 9D is a diagram of a temple adapter 960 according to still another embodiment of the invention. In FIG. 9D, a side-view of the temple adapter 960 is depicted. The temple adapter 960 attaches to a temple 962 of a pair of eyeglasses. The temple 962 can have a tip region 964, which can be referred to as a temple tip. The temple adapter 900 has a support member 966. A first end 968 of the support member 966 couples to the temple 962 of a pair of eyeglasses. In one embodiment, the first end 968 serves to attach the temple adapter 960 to the temple 962. For example, the first end 968 can provide a clip, clamp, post, or hole to provide or assist with the attachment. As another example, the first end 968 can alternatively or additionally use an adhesive, bonding or fastener (e.g., hook and loop system, e.g., Velcro) to provide or assist with the attachment. A second end 970 of the support member 906 provides an opening through which an arm 972 extends. One end of the arm 972 has an ear bud 974 attached thereto. The arm 972 can be angled and/or malleable. When a pair of eyeglasses associated with the temple 962 is being worn by a user, the ear bud 974 can be placed in or near the user's ear canal. The ear bud 974 contains a speaker and receives electrical signals via a wire, such wire can be provided internal or external to the temple adapter 960 and can originate at the temple 962 or external to the temple 962. Further, the temple

adapter 960 can include a microphone 976. In this embodiment, the microphone 976 is attached to the support member 966. In addition, an arm 978 is used to support an end of a cable 980 that is coupled to the arm 978. The cable 980 can include at least one wire for the microphone 976 and one wire for the speaker within the ear bud 974.

[0098] To the extent that any of the embodiments of the temple adapters discussed above use a microphone, a tube can be optionally attached to the microphone to facilitate voice pick-up of the user. One end of the tube can be placed over the microphone, and the other end of the tube is then positioned closer to the user's mouth than is the microphone. With a temple adapter on both temples, each providing a microphone and speaker to a pair of eyeglasses, only one temple adapter would typically make use of such a tube. Alternatively, the tube and the microphone could be replaced by a boom microphone.

[0099] FIG. 10A-10C are diagrams of a temple having a bone conducting element according to still other embodiments of the invention. The bone conducting elements can replace a traditional speaker to provide audio output to a user. Although not shown, electrical signals would be internally or externally supplied to the bone conducting element.

[00100] FIG. 10A illustrates a temple 1000 for a pair of eyeglasses. The temple 1000 includes a bone conducting element 1002 that can provide audio sound to a user by coupling vibrations to at least one bone of the user's face. The bone conducting element 1002 is held relative to the temple 1000 by an arm 1004. Hence, in this embodiment, the temple 1000, the arm 1004 and the bone conducting element 1002 can all be integrally formed.

[00101] FIG. 10B illustrates a temple 1020 for a pair of eyeglasses. The temple 1020 includes a bone conducting element 1022 that can provide audio sound to a user by coupling vibrations to at least one bone of the user's face. The bone conducting element 1022 is held relative to the temple 1020 by a support 1024 that removably attaches to the temple 1020.

[00102] FIG. 10C illustrates a temple 1040 for a pair of eyeglasses. The temple 1040 includes a bone conducting element 1042 that can provide audio sound to a user by coupling vibrations to at least one bone of the user's head. In this embodiment, the bone conducting element 1042 is positioned in the vicinity of the user's ear, such as behind the user's ear. The placement of the bone conducting element 1042 in this embodiment can reduce impact to the design of the eyeglasses.

[00103] In one embodiment, the electrical components associated with a temple arrangement or a temple adapter is for enhancing the hearing of the person wearing the corresponding pair of glasses. There can be at least a microphone and a speaker in a temple arrangement or a temple adapter. The microphone can be close to an ear of the user when the glasses are worn by the user, and can be a directional microphone. The microphones can be a microphone in a temple adapter, such as the microphone 730 in FIG. 7B, 808 in FIG. 8A, 936 in FIG. 9B, or 976 in FIG. 9D. The microphones can be in a temple arrangement. The microphone in a temple arrangement can be attached to a temple tip, a temple fit-over or a temple cover. The microphones can be positioned to be in front of the user's ears so that the microphones will not be affected by the shadowing effect of the ears. The speaker can be inserted into the ear, as in some of the speakers previously described.

[00104] In another embodiment, there are two sets of microphones and speakers, such as in two temple arrangements or temple adapters. In the vicinity of each ear, there is a temple arrangement or temple adapter with its corresponding microphone and speaker. The microphones again can be directional, one pointing generally outwards in a position close to the left ear, and one pointing generally outwards in a position close to the right ear. Alternatively, the microphones can point forward.

[00105] The microphone and the speaker close to an ear do not have to be in very close proximity to each other, as in many hearing aids existing nowadays.

They can be spaced apart by, such as, one to several inches, with the microphone being directional and pointing to the front and to either the left or the right of the user, and with the speaker pointing toward or inserted into the corresponding ear of the user. Such a distance apart can significantly reduce feedback effect of existing hearing aids. Another advantage of such a hearing enhancement device is that users may not need to be fitted into ears with ear molds. In any case, additional details on hearing enhancement are further described in the related applications that have been incorporated herein by reference, such as U.S. Provisional Patent Application No. 60/620,238, filed October 18, 2004, and entitled "EYEGLASSES WITH HEARING ENHANCED AND OTHER AUDIO SIGNAL-GENERATING CAPABILITIES."

[00106] The various embodiments of the invention noted above, whether temple arrangement or temple adapter, can have a cable or cord attached or attachable thereto. The cable or cord has one or more conductors. The cable or cord can serve to provide electrical signals to or receive electrical signals from the temple arrangement or the temple adapter. In one embodiment, one end of a cable or cord attaches to a temple arrangement or temple adapter (either permanently or via a connector) and the other end of the cable or cord attaches (either permanently or via a connector) to an electronic device. As an example, the electronic device can be an audio output device (e.g., audio player) or a communication device (e.g., mobile telephone). In a first example, the cable or cord could provide a male audio (stereo) connector at one end, and a pair of female audio connectors at the opposite end, each being for use with a different temple. In a second example, the cable or cord could provide a set of connectors, such as a male mini-phone connector (2.5 mm) and a male audio (stereo) connector, at one end, and one or a pair of female phone connectors at the opposite end.

[00107] In one embodiment, the cable or cord can also have a switch coupled thereto so as to permit a user to switch modes. For example, if the temple arrangement or temple adapter provides a speaker and microphone to a pair of

eyeglasses, a switch on a cable or cord that connects the temple arrangement or temple adapter to an electronic device could provide different switch positions for different electronic devices or different functional modes of operation of a single electronic device. As an example, if the electronic device is (or operates as) an audio player, a first switch position could be used. Alternatively, if the electronic device is (or operates as) a mobile telephone, a second switch position could be used. Additional discussion of suitable cables and cords is provided in the related applications that have been incorporated herein by reference.

[00108] Electrical components can form an electronic module. The electronic module can provide radiation monitoring, wireless communication, enhanced hearing, etc. A radiation monitoring system can be partially or fully contained in a temple arrangement or temple adapter associated with a temple of a pair of glasses. Typically, the temple arrangement or temple adapter can be removable from the temple.

[00109] In another embodiment, an electronic component in a temple arrangement or temple adapter interacts with another electronic component in another part (e.g., frame) of the glasses or in a device tethered to the glasses. For example, a temple of a pair of glasses holds one portion of an electronic circuit. That portion can include generic parts, such as a battery, that are applicable to different applications. Another portion of the electronic circuit is in a temple arrangement or temple adapter. This portion can be application specific, such as an electronic clock without a battery, or a temperature sensor.

[00110] In yet another embodiment, the electrical components can provide audio player capabilities. In such an embodiment, the electrical components can include audio file storage, an audio player and a battery. The electrical components may or may not include wireless communication circuitry.

[00111] Further, in an alternative embodiment, the output of an operation indicator can be audio. The audio output can be from one or more speakers

associated with the frame of the eyeglasses. Such audio output can signal the user using natural language, voice synthesis, pre-recorded messages, etc.

[00112] In another embodiment, the electrical components can include a memory module. The memory module provides non-volatile data storage. For example, the memory module can be a portable (or removable) memory device (e.g., memory card). The memory module can, for example, store sensor information (which can be over an extended period of time). Such memory module can be remotely interrogated using wireless communication circuitry, or can be accessed through a wired connection with a tethered device.

[00113] In one embodiment, the electrical connection(s) can alternatively be used to allow information stored in the electrical components to be accessed or queried by a device. For example, when the electrical components include a memory module, the memory module can be accessed to read data (e.g., status information) stored therein.

[00114] As previously noted, the electrical components associated with a temple arrangement and/or a temple adapter can pertain to radiation monitoring circuitry. In such case, the electrical components within the temple arrangement or temple adapter alone or together with eyeglass electrical components can implement a radiation monitoring system. The radiation being monitored can, for example, pertain to one or more of UV, infrared and gamma radiation. In one embodiment, sunlight is considered as a type of radiation. In any case, additional details on radiation monitoring are further described in the related applications that have been incorporated herein by reference.

[00115] Also, the electrical components can pertain to health or fitness monitoring circuitry. In such case, the electrical components within the temple arrangement or the temple adapter alone or together with eyeglass electrical components can implement a health or fitness monitoring system. Additional details on health or fitness monitoring are further described in the related applications that have been incorporated herein by reference.

[00116] In yet another embodiment, an electronic component in a temple arrangement or a temple adapter of a frame of eyeglasses interacts with an electronic component of an apparatus tethered to the eyeglasses to perform an operation. For example, a temple arrangement or a temple adapter of a pair of eyeglasses holds one portion of an electronic system, and a tethered apparatus that tethers to the pair of eyeglasses includes another portion of the electronic system.

[00117] Still further, the invention can provide a new approach to marketing accessories, namely, electrical accessories, for eyewear. According to one method for providing temple arrangements and/or temple adapters for use with a pair of glasses, the method can initially provide a plurality of temple arrangements and/or temple adapters for a customer. This enables the customer to browse and select at least one temple arrangement or temple adapter. Each of the temple arrangements or temple adapters can have one or more electrical components at least partially embedded therein, with different temple arrangements or temple adapters providing different electrical capabilities. Once a temple arrangement or temple adapters has been selected, the selected temple arrangement or temple adapters can be coupled to one of the corresponding temples of the eyewear (e.g., a pair of glasses). In the case where the selected temple arrangement is a temple tip, the selected temple tip is inserted onto (e.g., slid over) an end of the corresponding temple (after removing any previously installed temple tip if there was one). In the case where the selected temple adapter is to be coupled, the selected temple adapter can be attached to the corresponding temple. Thereafter, the customer can make use of the eyewear with its associated electrical capabilities provided by the temple arrangement or temple adapters.

[00118] In one embodiment, once a temple arrangement and/or a temple adapter is provided to a customer, the customer can test the electrical capabilities of the pair of glasses. If the customer does not like the current selected temple arrangement or temple adapter, the customer can repeat the process by selecting and testing another temple arrangement or temple adapter. Before providing the eyewear with the temple arrangement or temple adapter, the customer can be

required to pay a purchase (or rental) price for at least the temple arrangement or the temple adapter. Thereafter, the customer can be permitted to return and replace the temple arrangement or temple adapter with another temple arrangement or temple adapter. Such returns or replacements can be available only for a limited period of time following their purchase.

[00119] The various aspects, embodiments, implementations and features of the invention noted above can be combined in various ways or used separately. Those skilled in the art will understand from the description that the invention can be equally applied to or used in other various different settings with respect to various combinations, aspects, embodiments, implementations or features provided in the description herein.

[00120] Certain aspects of the invention can be implemented in software, hardware or a combination of hardware and software. Certain aspects of the invention can also be embodied as computer readable code on a computer readable medium. The computer readable medium is any data storage device that can store data which can thereafter be read by a computer system. Examples of the computer readable medium include read-only memory, random-access memory, CD-ROMs, magnetic tape, optical data storage devices, and carrier waves. The computer readable medium can also be distributed over network-coupled computer systems so that the computer readable code is stored and executed in a distributed fashion.

[00121] The advantages of the invention are numerous. Different embodiments or implementations may yield one or more of the following advantages. One advantage of the invention is that electrical components can be provided integral with or attached to a temple arrangement or a temple adapter for use with a pair of eyeglasses. Another advantage of the invention is that after-market changes to electrical capabilities of eyeglasses can be relatively easily achieved Another advantage of the invention is that communication, computation, information capturing or sensing, and/or operational capabilities can be provided for eyeglasses without substantial interference to style or design choices of the glasses.

Still another advantage of the invention is that wireless communications, radiation monitoring, fitness monitoring and/or health monitoring can be supported by the electrical components. Yet another advantage of the invention is the ability to provide hands-free wireless communications capability.

[00122] Numerous specific details are set forth in order to provide a thorough understanding of the present invention. However, it will become obvious to those skilled in the art that the invention may be practiced without these specific details. The description and representation herein are the common meanings used by those experienced or skilled in the art to most effectively convey the substance of their work to others skilled in the art. In other instances, well-known methods, procedures, components, and circuitry have not been described in detail to avoid unnecessarily obscuring aspects of the present invention.

[00123] In the foregoing description, reference to "one embodiment" or "an embodiment" means that a particular feature, structure, or characteristic described in connection with the embodiment can be included in at least one embodiment of the invention. The appearances of the phrase "in one embodiment" in various places in the specification are not necessarily all referring to the same embodiment, nor are separate or alternative embodiments mutually exclusive of other embodiments. Further, the order of blocks in process flowcharts or diagrams representing one or more embodiments of the invention do not inherently indicate any particular order nor imply any limitations in the invention.

[00124] The many features and advantages of the present invention are apparent from the written description and, thus, it is intended by the appended claims to cover all such features and advantages of the invention. Further, since numerous modifications and changes will readily occur to those skilled in the art, it is not desired to limit the invention to the exact construction and operation as illustrated and described. Hence, all suitable modifications and equivalents may be resorted to as falling within the scope of the invention.

What is claimed is:

CLAIMS

1. An eyewear frame, comprising:

a first temple having a first end and a second end, with the second end having a first temple arrangement coupled to at least a portion of the second end of the first temple;

a second temple having a first end and a second end, with the second end having a second temple arrangement coupled to at least a portion of the second end of the second temple;

an electronic device at least partially embedded in one of the temple arrangements; and

another electronic device physically separated from the first and second temple arrangements yet internal to said eyewear frame and operatively interconnected with the electronic device.

2. A pair of glasses, comprising:

a pair of temples, each of the temples having a rearward portion that fits over an ear of a person when said pair of glasses is being worn by the person;

a temple arrangement provided at the rearward portion of one of the temples, wherein the temple arrangement includes at least one electronic device, the at least one electronic device being embedded in the temple arrangement; and

another electronic device physically separated from the temple arrangement yet embedded in said pair of glasses and operatively interconnected with the at least one electronic device.

EYEWEAR SUPPORTING AFTER-MARKET ELECTRICAL COMPONENTS

ABSTRACT OF THE DISCLOSURE

Techniques for providing eyewear with electrical components are disclosed. The electrical components can provide electrical technology to eyewear (e.g., eyeglasses) without having to substantially compromise aesthetic design principles of the eyewear. Often, the electrical components can be attached to the eyewear as an after-market enhancement. The electrical components can operate independently or together with other electrical components provided elsewhere.

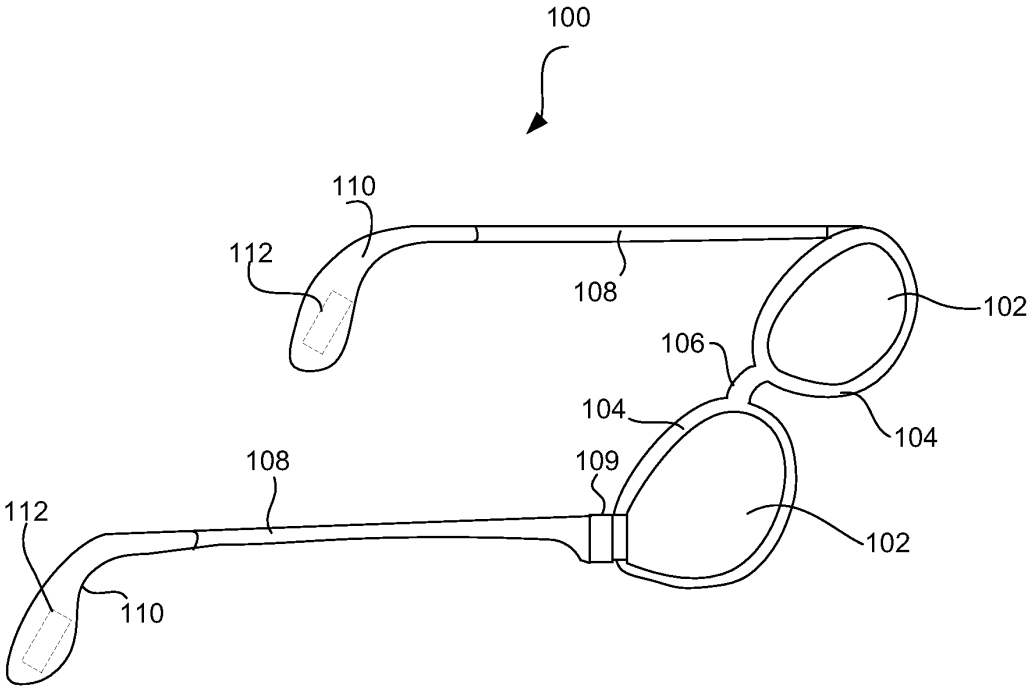

FIG. 1

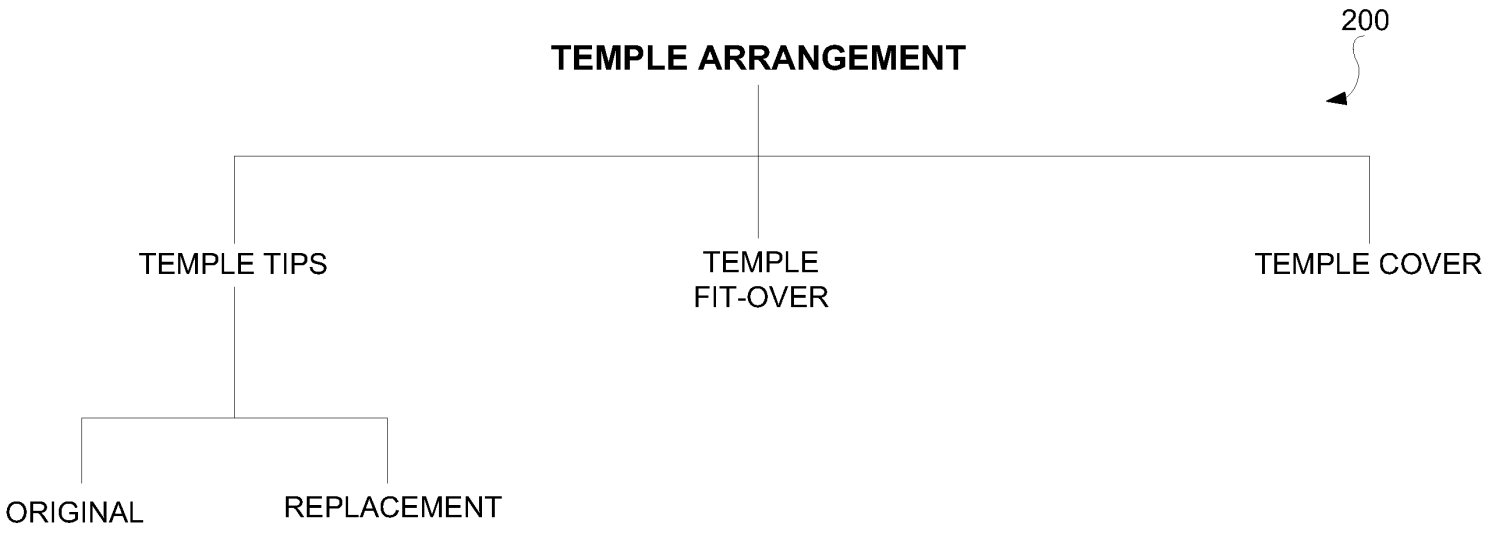
200
TEMPLE ARRANGEMENT
TEMPLE TIPS
TEMPLE
FIT-OVER
TEMPLE COVER
ORIGINAL
REPLACEMENT

FIG. 2

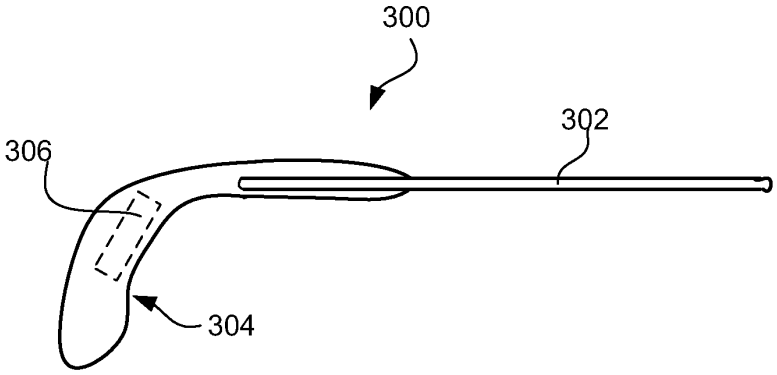

FIG. 3A

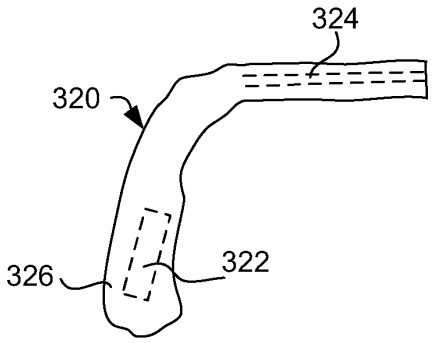

FIG. 3B

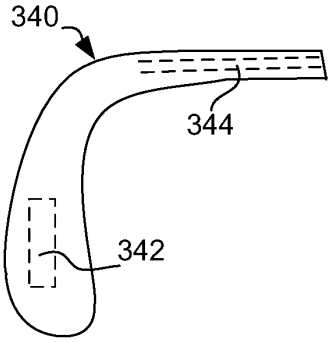

FIG. 3C

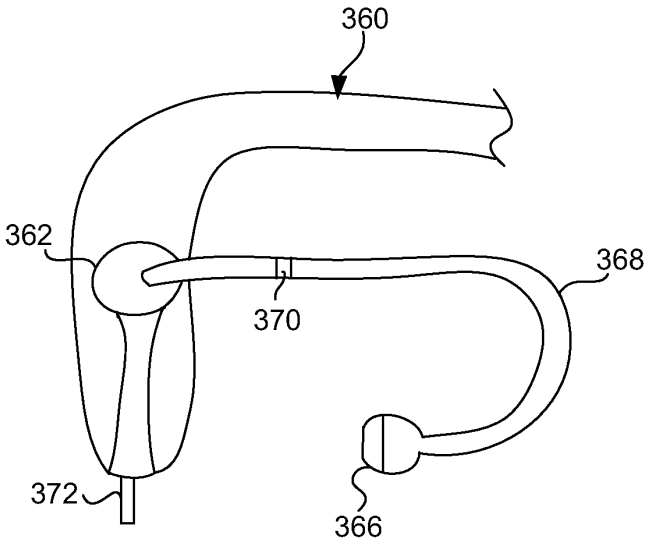

FIG. 3D

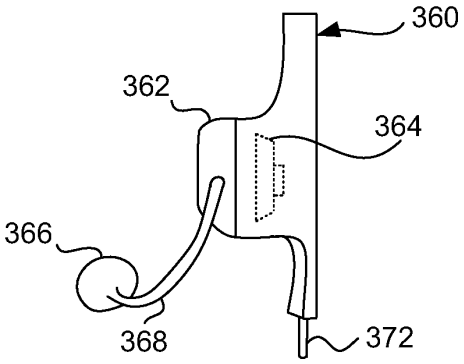

FIG. 3E

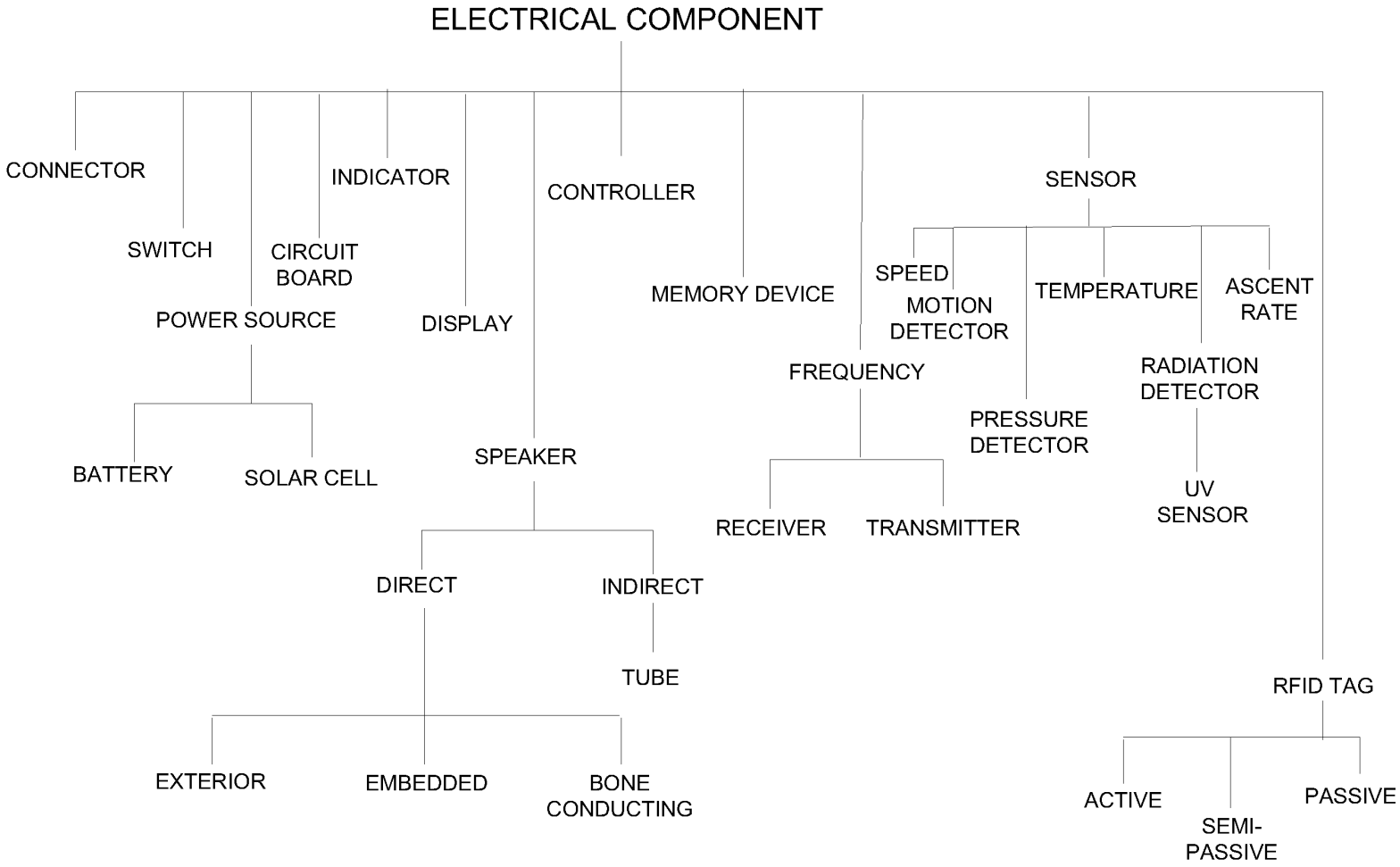
ELECTRICAL COMPONENT
CONNECTOR
SWITCH
POWER SOURCE
CIRCUIT BOARD
INDICATOR
DISPLAY
CONTROLLER
MEMORY DEVICE
SENSOR
SPEED
MOTION DETECTOR
TEMPERATURE
ASCENT RATE
RADIATION DETECTOR
PRESSURE DETECTOR
UV SENSOR
FREQUENCY
RECEIVER
TRANSMITTER
BATTERY
SOLAR CELL
SPEAKER
DIRECT
INDIRECT
TUBE
EXTERIOR
EMBEDDED
BONE CONDUCTING
RFID TAG
ACTIVE
SEMI-PASSIVE
PASSIVE

FIG. 4

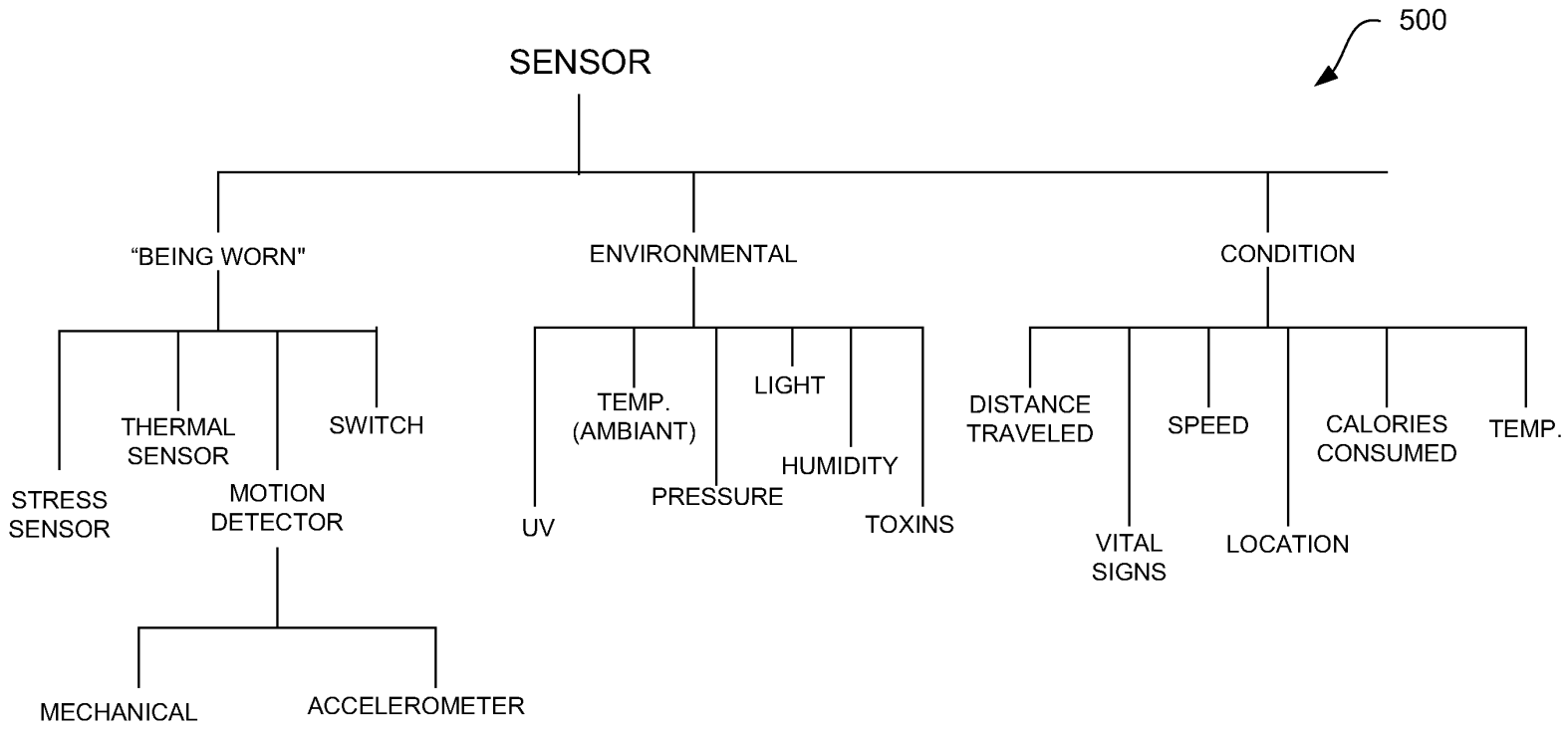
500
SENSOR
"BEING WORN"
ENVIRONMENTAL
CONDITION
STRESS SENSOR
THERMAL SENSOR
MOTION DETECTOR
SWITCH
MECHANICAL
ACCELEROMETER
UV
TEMP. (AMBIANT)
PRESSURE
LIGHT
HUMIDITY
TOXINS
DISTANCE TRAVELED
VITAL SIGNS
SPEED
LOCATION
CALORIES CONSUMED
TEMP.

FIG. 5

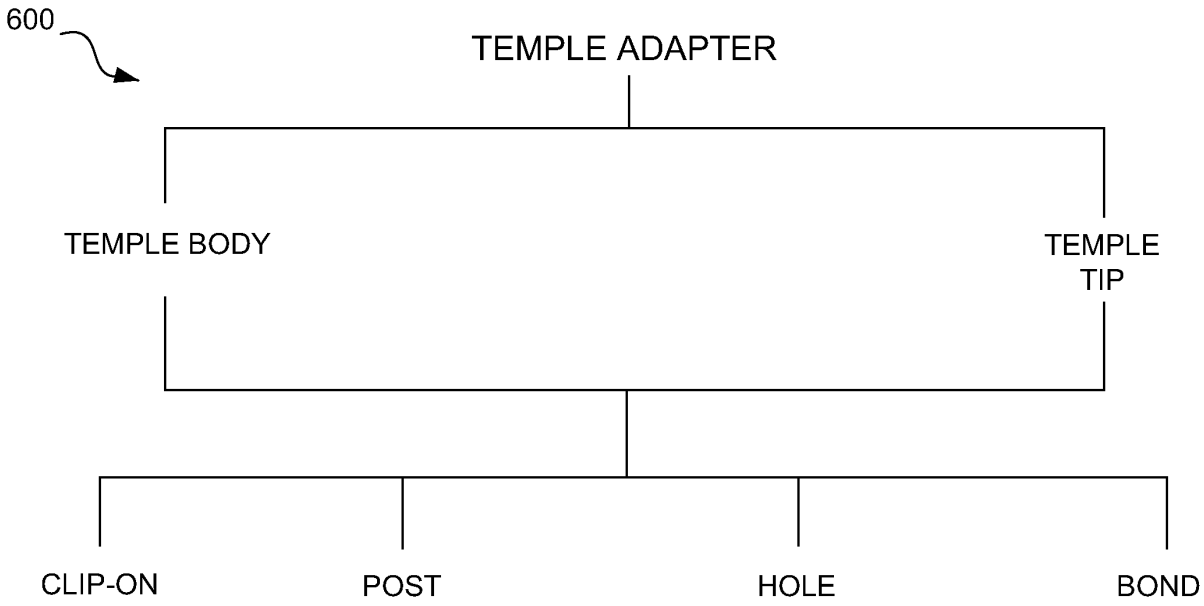
600
TEMPLE ADAPTER
TEMPLE BODY
TEMPLE TIP
CLIP-ON
POST
HOLE
BOND

FIG. 6

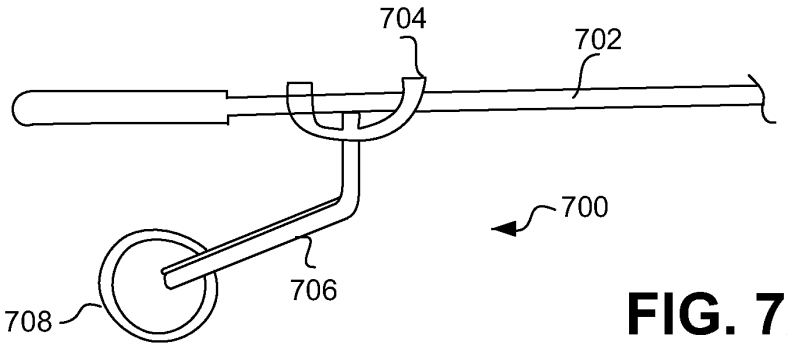

FIG. 7A

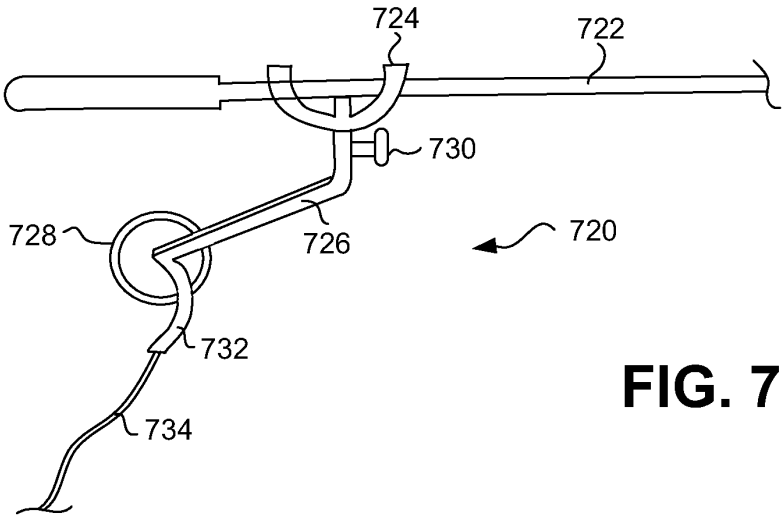

FIG. 7B

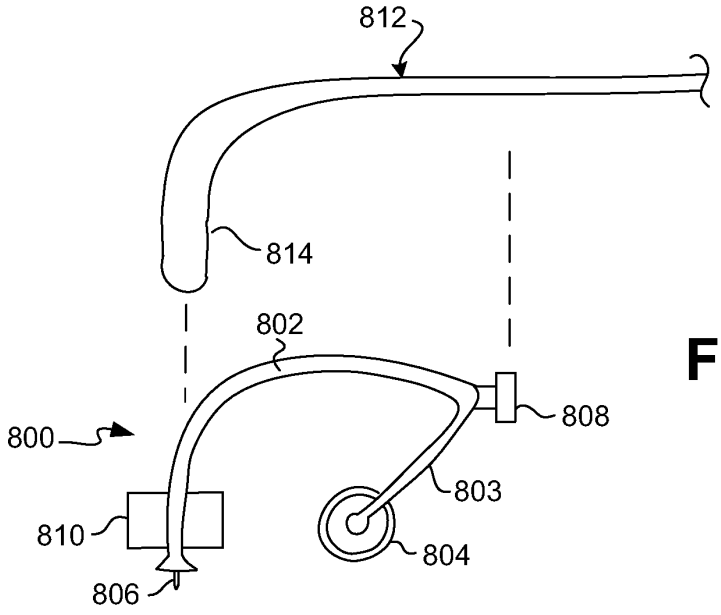

FIG. 8A

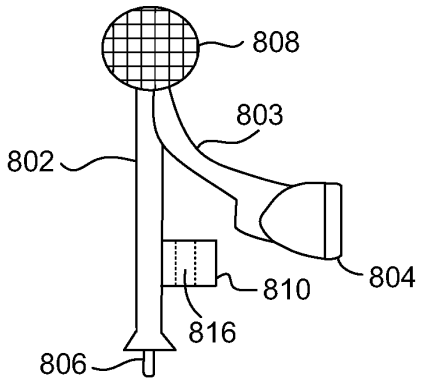

FIG. 8B

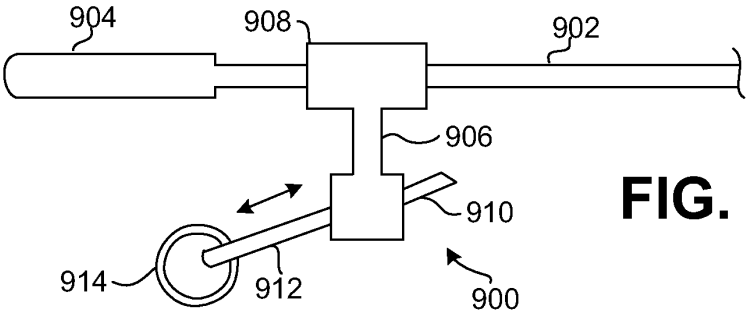

FIG. 9A

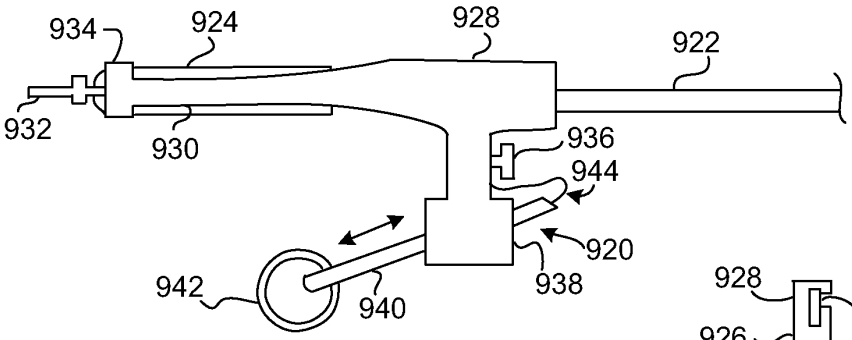

FIG. 9B

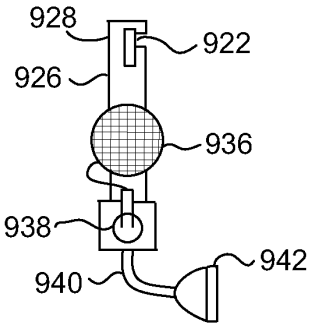

FIG. 9C

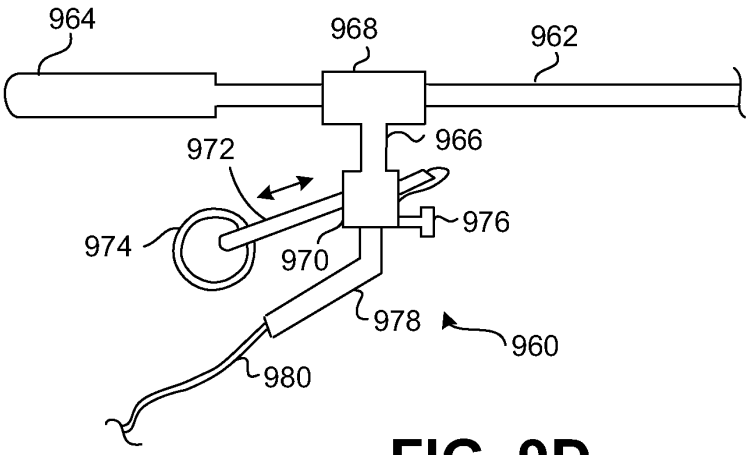

FIG. 9D

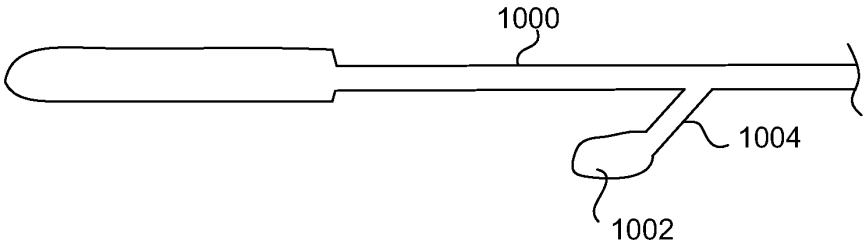

FIG. 10A

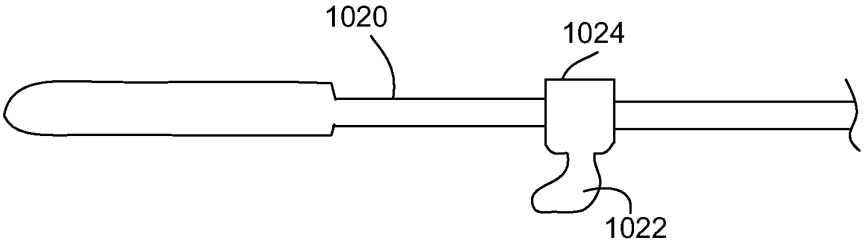

FIG. 10B

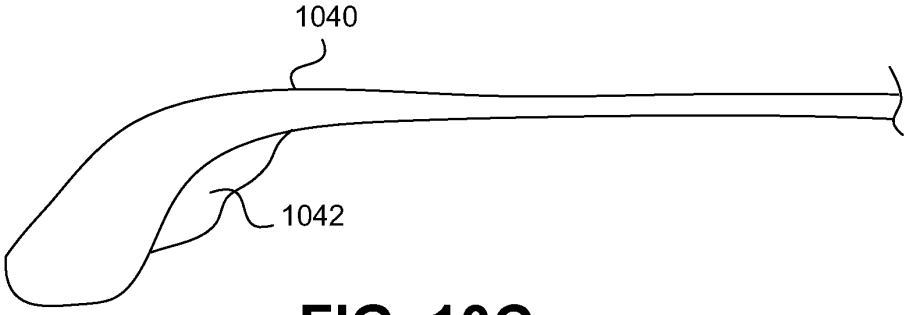

FIG. 10C