US009280220B2

(12) **United States Patent**
Shahparnia et al.

(10) **Patent No.: US 9,280,220 B2**
(45) **Date of Patent: Mar. 8, 2016**

(54) **PULSE- OR FRAME-BASED COMMUNICATION USING ACTIVE STYLUS**

(71) Applicant: **Atmel Corporation**, San Jose, CA (US)

(72) Inventors: **Shahrooz Shahparnia**, Monte Sereno (CA); **Vivek Pant**, San Jose, CA (US); **Esat Yilmaz**, Santa Cruz, CA (US); **Vemund Kval Bakken**, Tiller (NO); **Kishore Sundara-Rajan**, San Jose, CA (US); **John Stanley Dubery**, Basingstoke (GB); **Martin J. Simmons**, Whiteley (GB); **Sherif Hanna**, Foster City, CA (US)

(73) Assignee: **Atmel Corporation**, San Jose, CA (US)

(*) Notice: Subject to any disclaimer, the term of this patent is extended or adjusted under 35 U.S.C. 154(b) by 0 days.

(21) Appl. No.: **14/593,349**

(22) Filed: **Jan. 9, 2015**

(65) **Prior Publication Data**

US 2015/0116271 A1 Apr. 30, 2015

Related U.S. Application Data

(63) Continuation of application No. 13/363,043, filed on Jan. 31, 2012, now Pat. No. 8,933,899.

(60) Provisional application No. 61/553,114, filed on Oct. 28, 2011.

(51) **Int. Cl.**

G06F 3/038	(2013.01)
G06F 3/044	(2006.01)
G06F 3/0354	(2013.01)
G06F 3/041	(2006.01)

(52) **U.S. Cl.**

CPC ***G06F 3/0383*** (2013.01); ***G06F 3/038*** (2013.01); ***G06F 3/03545*** (2013.01); ***G06F 3/044*** (2013.01); ***G06F 3/0416*** (2013.01)

(58) **Field of Classification Search**

None

See application file for complete search history.

(56) **References Cited**

U.S. PATENT DOCUMENTS

4,695,680	A	9/1987	Kable
5,973,677	A	10/1999	Gibbons
7,612,767	B1	11/2009	Griffin
7,663,607	B2	2/2010	Hotelling
7,875,814	B2	1/2011	Chen
7,920,129	B2	4/2011	Hotelling

(Continued)

FOREIGN PATENT DOCUMENTS

WO	2012129247	9/2012

OTHER PUBLICATIONS

U.S. Appl. No. 61/454,936, filed Mar. 21, 2011; Applicant: Myers.

(Continued)

Primary Examiner — Joseph Feild
Assistant Examiner — Emily Frank
(74) *Attorney, Agent, or Firm* — Baker Botts L.L.P.

(57) **ABSTRACT**

In one embodiment, a method includes receiving sensor data from one or more sensors in or on a stylus, the stylus including one or more electrodes and one or more computer-readable non-transitory storage media embodying logic for wirelessly transmitting signals to a device through a touch sensor of the device. The method includes generating a carrier signal and modulating the carrier signal to communicate the sensor data and wirelessly transmitting from the stylus to the device the carrier signal as modulated through the touch sensor of the device.

18 Claims, 8 Drawing Sheets

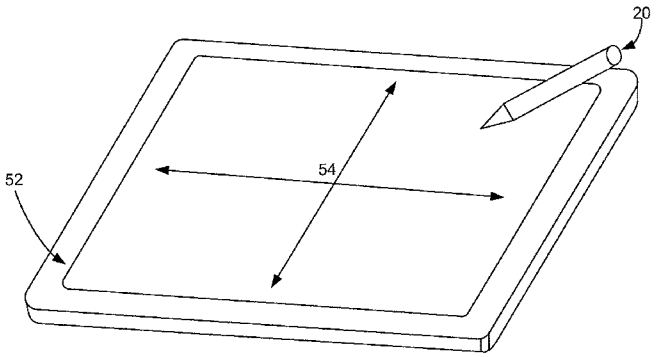

(56) **References Cited**

U.S. PATENT DOCUMENTS

8,031,094	B2	10/2011	Hotelling	
8,031,174	B2	10/2011	Hamblin	
8,040,326	B2	10/2011	Hotelling	
8,049,732	B2	11/2011	Hotelling	
8,179,381	B2	5/2012	Frey	
8,278,571	B2 *	10/2012	Orsley	G06F 3/044 178/18.03
2008/0158165	A1	7/2008	Geaghan	
2008/0238885	A1	10/2008	Zachut	
2009/0095540	A1	4/2009	Zachut	
2009/0115725	A1	5/2009	Shemesh	
2009/0127005	A1	5/2009	Zachut	
2009/0153152	A1	6/2009	Maharyta	
2009/0184939	A1	7/2009	Wohlstadter	
2009/0251434	A1	10/2009	Rimon	
2009/0315854	A1	12/2009	Matsuo	
2010/0006350	A1	1/2010	Elias	
2010/0155153	A1	6/2010	Zachut	
2010/0292945	A1	11/2010	Reynolds	
2010/0315384	A1	12/2010	Hargreaves	
2011/0007029	A1	1/2011	Ben-David	
2012/0050231	A1 *	3/2012	Westhues	G06F 3/03545 345/179
2012/0105362	A1	5/2012	Kremin	
2012/0242588	A1	9/2012	Myers	
2012/0242592	A1	9/2012	Rothkopf	
2012/0243151	A1	9/2012	Lynch	
2012/0243719	A1	9/2012	Franklin	
2012/0327041	A1	12/2012	Harley	

OTHER PUBLICATIONS

U.S. Appl. No. 61/454,950, filed Mar. 21, 2011; Applicant: Lynch.

U.S. Appl. No. 61/454,894, filed Mar. 21, 2011; Applicant: Rothkopf.

Kyung, Ki-Uk et al., "wUbi-Pen : Windows Graphical User Interface Interacting with Haptic Feedback Stylus," SIGGRAPH,, Los Angeles, California (Aug. 2008).

Lee, Johnny C. et al., "Haptic Pen: A Tactile Feedback Stylus for Touch Screens," UIST '04, vol. 6, Issue 2, Santa Fe, New Mexico (Oct. 2004).

Song, Hyunyoung et al., "Grips and Gestures on a Multi-Touch Pen," CHI 2011, Session: Flexible Grips & Gestures, Vancouver, BC, Canada (May 2011).

Tan, Eng Chong et al., "Application of Capacitive Coupling to the Design of an Absolute-Coordinate Pointing Device," IEEE Transactions on Instrumentation and Measurement, vol. 54, No. 5 (Oct. 2005).

* cited by examiner

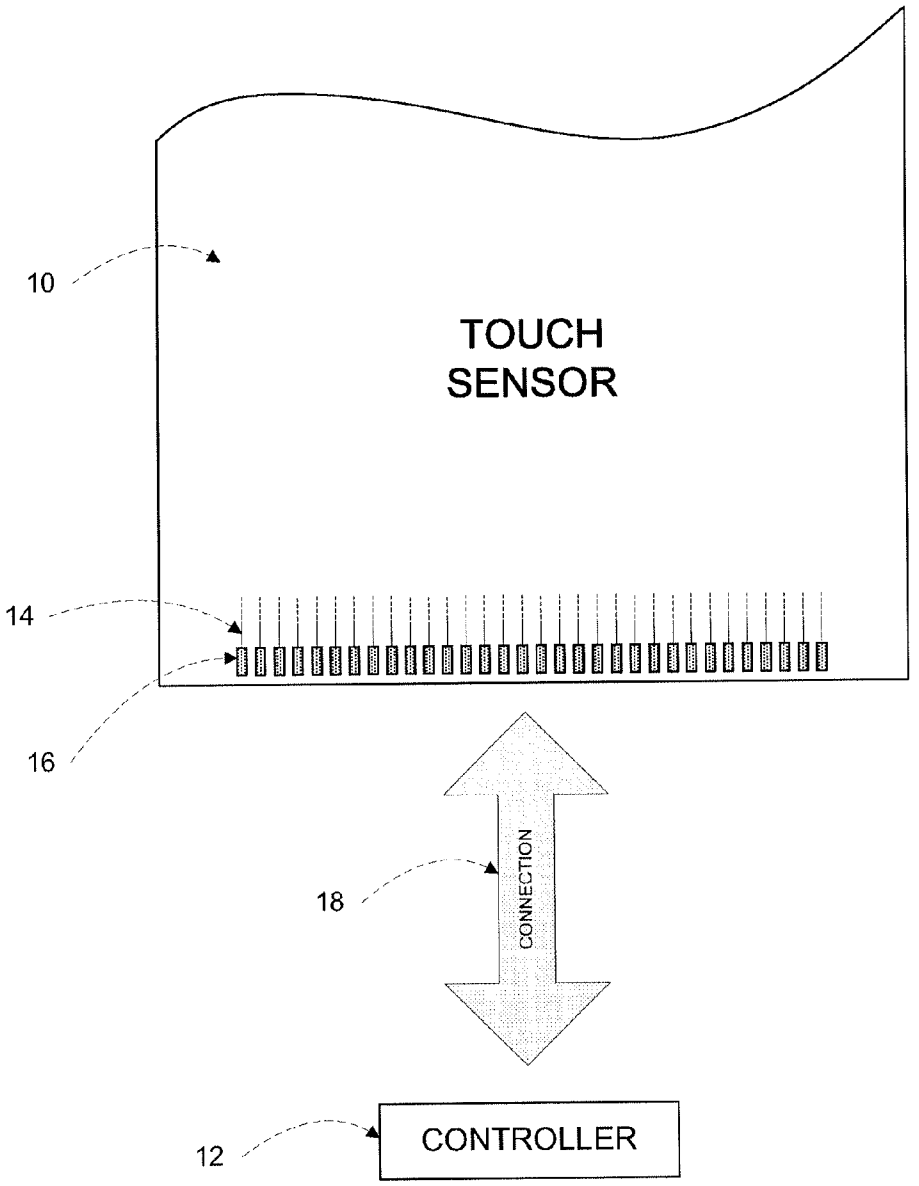

Figure 1

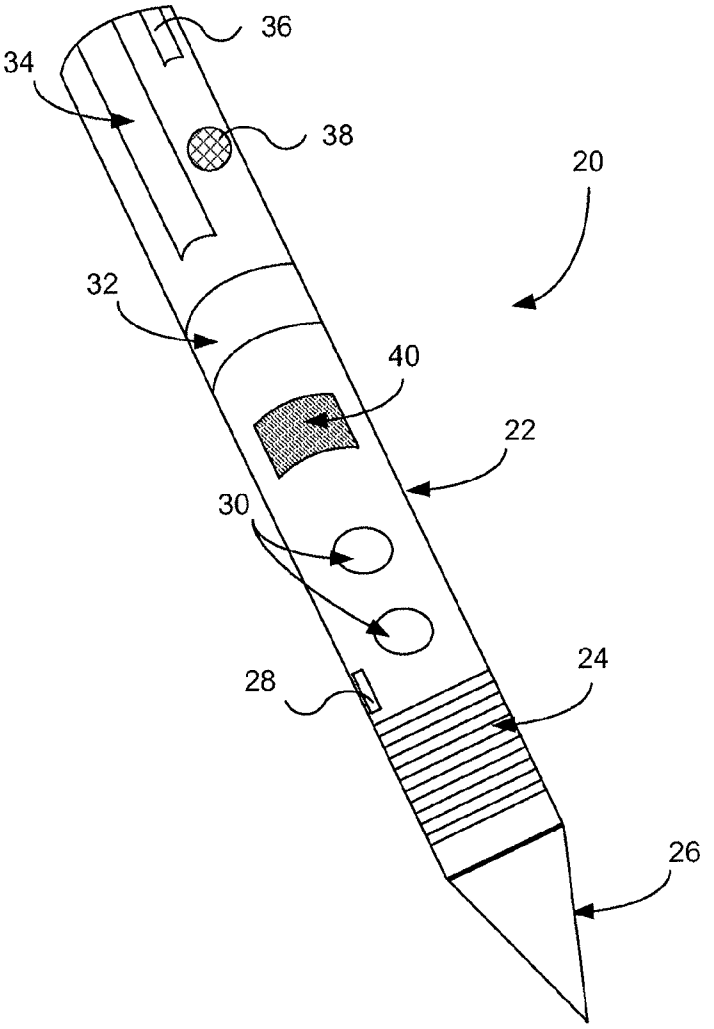

Figure 2

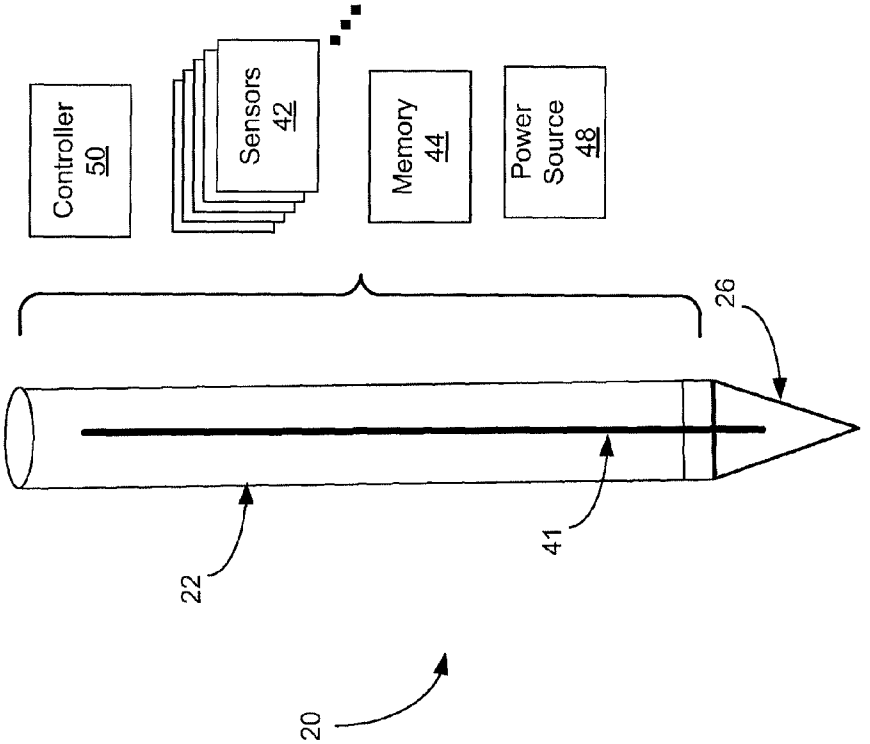
Controller
50
Sensors
42
Memory
44
Power
Source
48
26
22
41
20

Figure 3

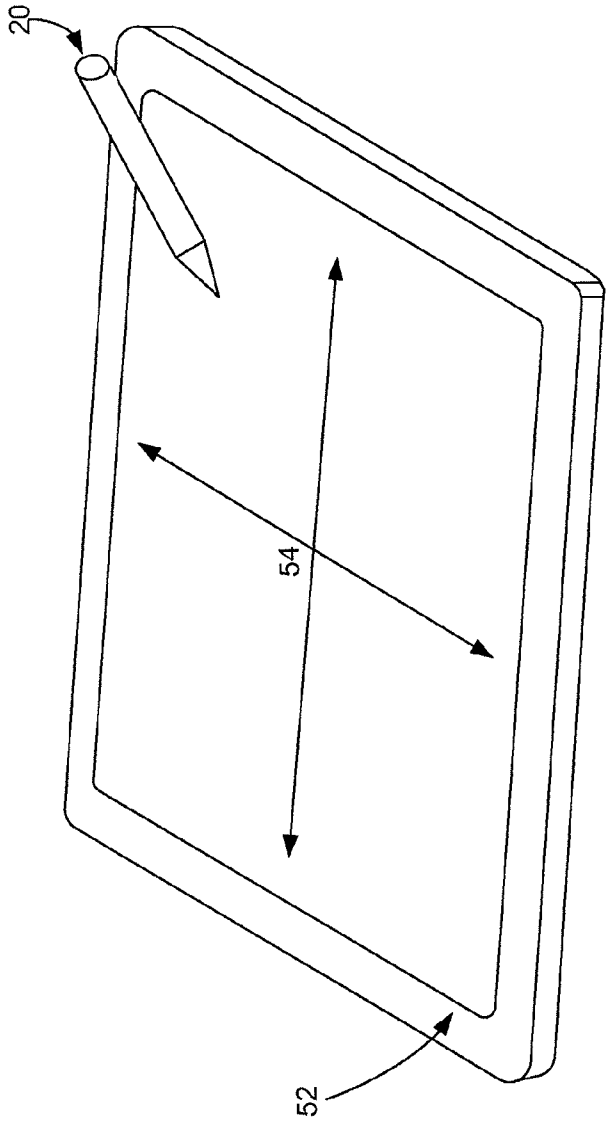

Figure 4

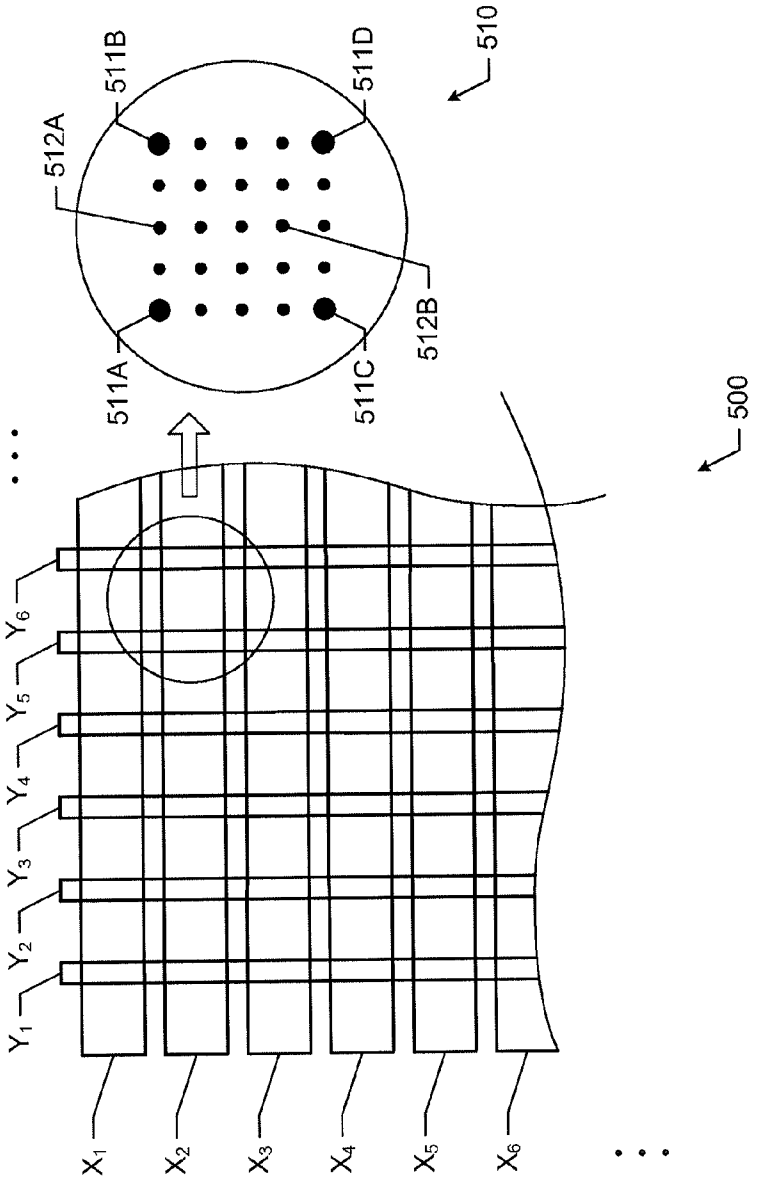
510
511A
511B
511C
511D
512A
512B
500
Y_1
Y_2
Y_3
Y_4
Y_5
Y_6
X_1
X_2
X_3
X_4
X_5
X_6

Figure 5

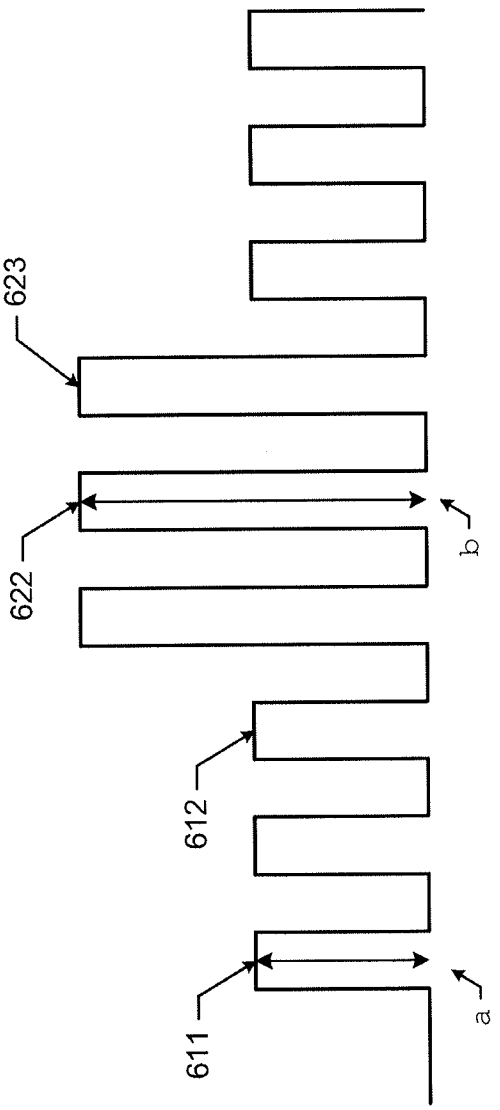

Figure 6

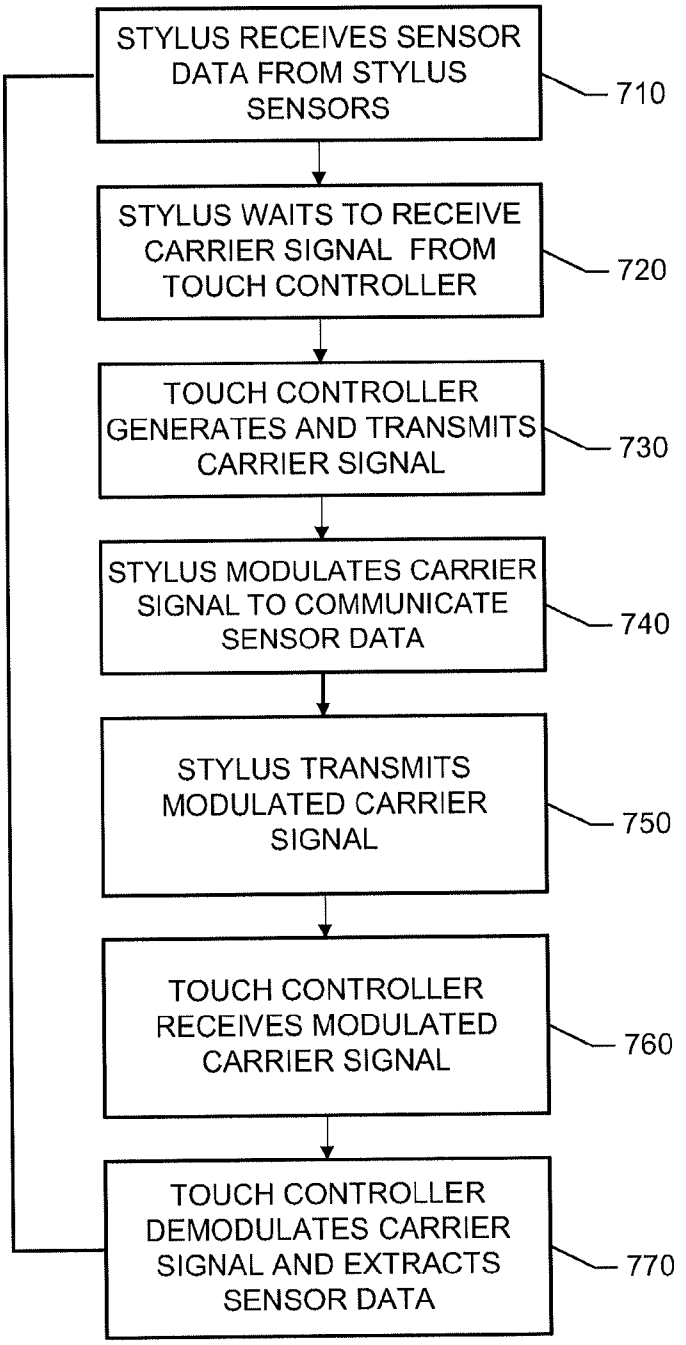
STYLUS RECEIVES SENSOR DATA FROM STYLUS SENSORS
710
STYLUS WAITS TO RECEIVE CARRIER SIGNAL FROM TOUCH CONTROLLER
720
TOUCH CONTROLLER GENERATES AND TRANSMITS CARRIER SIGNAL
730
STYLUS MODULATES CARRIER SIGNAL TO COMMUNICATE SENSOR DATA
740
STYLUS TRANSMITS MODULATED CARRIER SIGNAL
750
TOUCH CONTROLLER RECEIVES MODULATED CARRIER SIGNAL
760
TOUCH CONTROLLER DEMODULATES CARRIER SIGNAL AND EXTRACTS SENSOR DATA
770

Figure 7A

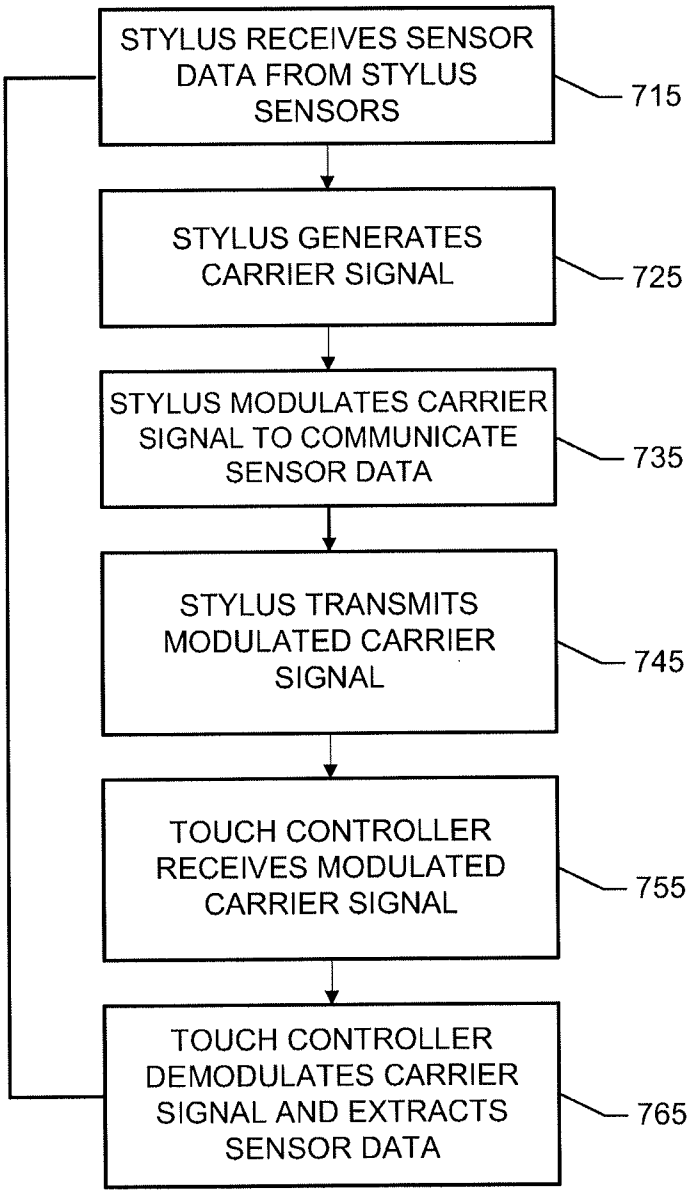
STYLUS RECEIVES SENSOR DATA FROM STYLUS SENSORS
715
STYLUS GENERATES CARRIER SIGNAL
725
STYLUS MODULATES CARRIER SIGNAL TO COMMUNICATE SENSOR DATA
735
STYLUS TRANSMITS MODULATED CARRIER SIGNAL
745
TOUCH CONTROLLER RECEIVES MODULATED CARRIER SIGNAL
755
TOUCH CONTROLLER DEMODULATES CARRIER SIGNAL AND EXTRACTS SENSOR DATA
765

Figure 7B

PULSE- OR FRAME-BASED COMMUNICATION USING ACTIVE STYLUS

RELATED APPLICATIONS

This application is a continuation, under 35 U.S.C. 120, of U.S. patent application Ser. No. 13/363,043, filed 31 Jan. 2012, which claims the benefit, under 35 U.S.C. §119(e), of U.S. Provisional Patent Application No. 61/553,114, filed 28 Oct. 2011.

TECHNICAL FIELD

This disclosure generally relates to touch sensors.

BACKGROUND

A touch sensor may detect the presence and location of a touch or the proximity of an object (such as a user's finger or a stylus) within a touch-sensitive area of the touch sensor overlaid on a display screen, for example. In a touch-sensitive-display application, the touch sensor may enable a user to interact directly with what is displayed on the screen, rather than indirectly with a mouse or touch pad. A touch sensor may be attached to or provided as part of a desktop computer, laptop computer, tablet computer, personal digital assistant (PDA), smartphone, satellite navigation device, portable media player, portable game console, kiosk computer, point-of-sale device, or other suitable device. A control panel on a household or other appliance may include a touch sensor.

There are a number of different types of touch sensors, such as, for example, resistive touch screens, surface acoustic wave touch screens, and capacitive touch screens. Herein, reference to a touch sensor may encompass a touch screen, and vice versa, where appropriate. When an object touches or comes within proximity of the surface of the capacitive touch screen, a change in capacitance may occur within the touch screen at the location of the touch or proximity. A touch-sensor controller may process the change in capacitance to determine its position on the touch screen.

BRIEF DESCRIPTION OF THE DRAWINGS

FIG. **1** illustrates an example touch sensor with an example touch-sensor controller.

FIG. **2** illustrates an example active stylus exterior.

FIG. **3** illustrates an example active stylus interior.

FIG. **4** illustrates an example active stylus with touch sensor device.

FIG. **5** illustrates an example touch-sensitive area of a touch sensor device.

FIG. **6** illustrates an example method for communication from an active stylus to a touch sensor device.

FIG. **7**A illustrates an example method for communicating modulated data between an active stylus and a device.

FIG. **7**B illustrates an example method for communicating modulated data between an active stylus and a device.

DESCRIPTION OF EXAMPLE EMBODIMENTS

FIG. **1** illustrates an example touch sensor **10** with an example touch-sensor controller **12**. Touch sensor **10** and touch-sensor controller **12** may detect the presence and location of a touch or the proximity of an object within a touch-sensitive area of touch sensor **10**. Herein, reference to a touch sensor may encompass both the touch sensor and its touch-sensor controller, where appropriate. Similarly, reference to a touch-sensor controller may encompass both the touch-sensor controller and its touch sensor, where appropriate. Touch sensor **10** may include one or more touch-sensitive areas, where appropriate. Touch sensor **10** may include an array of drive and sense electrodes (or an array of electrodes of a single type) disposed on one or more substrates, which may be made of a dielectric material. Herein, reference to a touch sensor may encompass both the electrodes of the touch sensor and the substrate(s) that they are disposed on, where appropriate. Alternatively, where appropriate, reference to a touch sensor may encompass the electrodes of the touch sensor, but not the substrate(s) that they are disposed on.

An electrode (whether a ground electrode, guard electrode, drive electrode, or sense electrode) may be an area of conductive material forming a shape, such as for example a disc, square, rectangle, thin line, other suitable shape, or suitable combination of these. One or more cuts in one or more layers of conductive material may (at least in part) create the shape of an electrode, and the area of the shape may (at least in part) be bounded by those cuts. In particular embodiments, the conductive material of an electrode may occupy approximately 100% of the area of its shape. As an example and not by way of limitation, an electrode may be made of indium tin oxide (ITO) and the ITO of the electrode may occupy approximately 100% of the area of its shape (sometimes referred to as a 100% fill), where appropriate. In particular embodiments, the conductive material of an electrode may occupy substantially less than 100% of the area of its shape. As an example and not by way of limitation, an electrode may be made of fine lines of metal or other conductive material (FLM), such as for example copper, silver, or a copper- or silver-based material, and the fine lines of conductive material may occupy approximately 5% of the area of its shape in a hatched, mesh, or other suitable pattern. Herein, reference to FLM encompasses such material, where appropriate. Although this disclosure describes or illustrates particular electrodes made of particular conductive material forming particular shapes with particular fill percentages having particular patterns, this disclosure contemplates any suitable electrodes made of any suitable conductive material forming any suitable shapes with any suitable fill percentages having any suitable patterns.

Where appropriate, the shapes of the electrodes (or other elements) of a touch sensor may constitute in whole or in part one or more macro-features of the touch sensor. One or more characteristics of the implementation of those shapes (such as, for example, the conductive materials, fills, or patterns within the shapes) may constitute in whole or in part one or more micro-features of the touch sensor. One or more macro-features of a touch sensor may determine one or more characteristics of its functionality, and one or more micro-features of the touch sensor may determine one or more optical features of the touch sensor, such as transmittance, refraction, or reflection.

A mechanical stack may contain the substrate (or multiple substrates) and the conductive material forming the drive or sense electrodes of touch sensor **10**. As an example and not by way of limitation, the mechanical stack may include a first layer of optically clear adhesive (OCA) beneath a cover panel. The cover panel may be clear and made of a resilient material suitable for repeated touching, such as for example glass, polycarbonate, or poly(methyl methacrylate) (PMMA). This disclosure contemplates any suitable cover panel made of any suitable material. The first layer of OCA may be disposed between the cover panel and the substrate with the conductive material forming the drive or sense electrodes. The mechanical stack may also include a second layer

of OCA and a dielectric layer (which may be made of PET or another suitable material, similar to the substrate with the conductive material forming the drive or sense electrodes). As an alternative, where appropriate, a thin coating of a dielectric material may be applied instead of the second layer of OCA and the dielectric layer. The second layer of OCA may be disposed between the substrate with the conductive material making up the drive or sense electrodes and the dielectric layer, and the dielectric layer may be disposed between the second layer of OCA and an air gap to a display of a device including touch sensor **10** and touch-sensor controller **12**. As an example only and not by way of limitation, the cover panel may have a thickness of approximately 1 mm; the first layer of OCA may have a thickness of approximately 0.05 mm; the substrate with the conductive material forming the drive or sense electrodes may have a thickness of approximately 0.05 mm; the second layer of OCA may have a thickness of approximately 0.05 mm; and the dielectric layer may have a thickness of approximately 0.05 mm. Although this disclosure describes a particular mechanical stack with a particular number of particular layers made of particular materials and having particular thicknesses, this disclosure contemplates any suitable mechanical stack with any suitable number of any suitable layers made of any suitable materials and having any suitable thicknesses. As an example and not by way of limitation, in particular embodiments, a layer of adhesive or dielectric may replace the dielectric layer, second layer of OCA, and air gap described above, with there being no air gap to the display.

One or more portions of the substrate of touch sensor **10** may be made of polyethylene terephthalate (PET) or another suitable material. This disclosure contemplates any suitable substrate with any suitable portions made of any suitable material. In particular embodiments, the drive or sense electrodes in touch sensor **10** may be made of ITO in whole or in part. In particular embodiments, the drive or sense electrodes in touch sensor **10** may be made of fine lines of metal or other conductive material. As an example and not by way of limitation, one or more portions of the conductive material may be copper or copper-based and have a thickness of approximately 5 μm or less and a width of approximately 10 μm or less. As another example, one or more portions of the conductive material may be silver or silver-based and similarly have a thickness of approximately 5 μm or less and a width of approximately 10 μm or less. This disclosure contemplates any suitable electrodes made of any suitable material.

Touch sensor **10** may implement a capacitive form of touch sensing. In a mutual-capacitance implementation, touch sensor **10** may include an array of drive and sense electrodes forming an array of capacitive nodes. A drive electrode and a sense electrode may form a capacitive node. The drive and sense electrodes forming the capacitive node may come near each other, but not make electrical contact with each other. Instead, the drive and sense electrodes may be capacitively coupled to each other across a space between them. A pulsed or alternating voltage applied to the drive electrode (by touch-sensor controller **12**) may induce a charge on the sense electrode, and the amount of charge induced may be susceptible to external influence (such as a touch or the proximity of an object). When an object touches or comes within proximity of the capacitive node, a change in capacitance may occur at the capacitive node and touch-sensor controller **12** may measure the change in capacitance. By measuring changes in capacitance throughout the array, touch-sensor controller **12** may determine the position of the touch or proximity within the touch-sensitive area(s) of touch sensor **10**.

In a self-capacitance implementation, touch sensor **10** may include an array of electrodes of a single type that may each form a capacitive node. When an object touches or comes within proximity of the capacitive node, a change in self-capacitance may occur at the capacitive node and controller **12** may measure the change in capacitance, for example, as a change in the amount of charge needed to raise the voltage at the capacitive node by a pre-determined amount. As with a mutual-capacitance implementation, by measuring changes in capacitance throughout the array, controller **12** may determine the position of the touch or proximity within the touch-sensitive area(s) of touch sensor **10**. This disclosure contemplates any suitable form of capacitive touch sensing, where appropriate.

In particular embodiments, one or more drive electrodes may together form a drive line running horizontally or vertically or in any suitable orientation. Similarly, one or more sense electrodes may together form a sense line running horizontally or vertically or in any suitable orientation. In particular embodiments, drive lines may run substantially perpendicular to sense lines. Herein, reference to a drive line may encompass one or more drive electrodes making up the drive line, and vice versa, where appropriate. Similarly, reference to a sense line may encompass one or more sense electrodes making up the sense line, and vice versa, where appropriate.

Touch sensor **10** may have drive and sense electrodes disposed in a pattern on one side of a single substrate. In such a configuration, a pair of drive and sense electrodes capacitively coupled to each other across a space between them may form a capacitive node. For a self-capacitance implementation, electrodes of only a single type may be disposed in a pattern on a single substrate. In addition or as an alternative to having drive and sense electrodes disposed in a pattern on one side of a single substrate, touch sensor **10** may have drive electrodes disposed in a pattern on one side of a substrate and sense electrodes disposed in a pattern on another side of the substrate. Moreover, touch sensor **10** may have drive electrodes disposed in a pattern on one side of one substrate and sense electrodes disposed in a pattern on one side of another substrate. In such configurations, an intersection of a drive electrode and a sense electrode may form a capacitive node. Such an intersection may be a location where the drive electrode and the sense electrode "cross" or come nearest each other in their respective planes. The drive and sense electrodes do not make electrical contact with each other—instead they are capacitively coupled to each other across a dielectric at the intersection. Although this disclosure describes particular configurations of particular electrodes forming particular nodes, this disclosure contemplates any suitable configuration of any suitable electrodes forming any suitable nodes. Moreover, this disclosure contemplates any suitable electrodes disposed on any suitable number of any suitable substrates in any suitable patterns.

As described above, a change in capacitance at a capacitive node of touch sensor **10** may indicate a touch or proximity input at the position of the capacitive node. Touch-sensor controller **12** may detect and process the change in capacitance to determine the presence and location of the touch or proximity input. Touch-sensor controller **12** may then communicate information about the touch or proximity input to one or more other components (such one or more central processing units (CPUs)) of a device that includes touch sensor **10** and touch-sensor controller **12**, which may respond to the touch or proximity input by initiating a function of the device (or an application running on the device). Although this disclosure describes a particular touch-sensor controller having particular functionality with respect to a particular

device and a particular touch sensor, this disclosure contemplates any suitable touch-sensor controller having any suitable functionality with respect to any suitable device and any suitable touch sensor.

Touch-sensor controller **12** may be one or more integrated circuits (ICs), such as for example general-purpose microprocessors, microcontrollers, programmable logic devices (PLDs) or programmable logic arrays (PLAs), application-specific ICs (ASICs). In particular embodiments, touch-sensor controller **12** comprises analog circuitry, digital logic, and digital non-volatile memory. In particular embodiments, touch-sensor controller **12** is disposed on a flexible printed circuit (FPC) bonded to the substrate of touch sensor **10**, as described below. The FPC may be active or passive, where appropriate. In particular embodiments multiple touch-sensor controllers **12** are disposed on the FPC. Touch-sensor controller **12** may include a processor unit, a drive unit, a sense unit, and a storage unit. The drive unit may supply drive signals to the drive electrodes of touch sensor **10**. The sense unit may sense charge at the capacitive nodes of touch sensor **10** and provide measurement signals to the processor unit representing capacitances at the capacitive nodes. The processor unit may control the supply of drive signals to the drive electrodes by the drive unit and process measurement signals from the sense unit to detect and process the presence and location of a touch or proximity input within the touch-sensitive area(s) of touch sensor **10**. The processor unit may also track changes in the position of a touch or proximity input within the touch-sensitive area(s) of touch sensor **10**. The storage unit may store programming for execution by the processor unit, including programming for controlling the drive unit to supply drive signals to the drive electrodes, programming for processing measurement signals from the sense unit, and other suitable programming, where appropriate. Although this disclosure describes a particular touch-sensor controller having a particular implementation with particular components, this disclosure contemplates any suitable touch-sensor controller having any suitable implementation with any suitable components.

Tracks **14** of conductive material disposed on the substrate of touch sensor **10** may couple the drive or sense electrodes of touch sensor **10** to connection pads **16**, also disposed on the substrate of touch sensor **10**. As described below, connection pads **16** facilitate coupling of tracks **14** to touch-sensor controller **12**. Tracks **14** may extend into or around (e.g. at the edges of) the touch-sensitive area(s) of touch sensor **10**. Particular tracks **14** may provide drive connections for coupling touch-sensor controller **12** to drive electrodes of touch sensor **10**, through which the drive unit of touch-sensor controller **12** may supply drive signals to the drive electrodes. Other tracks **14** may provide sense connections for coupling touch-sensor controller **12** to sense electrodes of touch sensor **10**, through which the sense unit of touch-sensor controller **12** may sense charge at the capacitive nodes of touch sensor **10**. Tracks **14** may be made of fine lines of metal or other conductive material. As an example and not by way of limitation, the conductive material of tracks **14** may be copper or copper-based and have a width of approximately 100 μm or less. As another example, the conductive material of tracks **14** may be silver or silver-based and have a width of approximately 100 μm or less. In particular embodiments, tracks **14** may be made of ITO in whole or in part in addition or as an alternative to fine lines of metal or other conductive material. Although this disclosure describes particular tracks made of particular materials with particular widths, this disclosure contemplates any suitable tracks made of any suitable materials with any suitable widths. In addition to tracks **14**, touch sensor **10** may include one or more ground lines terminating at a ground connector (which may be a connection pad **16**) at an edge of the substrate of touch sensor **10** (similar to tracks **14**).

Connection pads **16** may be located along one or more edges of the substrate, outside the touch-sensitive area(s) of touch sensor **10**. As described above, touch-sensor controller **12** may be on an FPC. Connection pads **16** may be made of the same material as tracks **14** and may be bonded to the FPC using an anisotropic conductive film (ACF). Connection **18** may include conductive lines on the FPC coupling touch-sensor controller **12** to connection pads **16**, in turn coupling touch-sensor controller **12** to tracks **14** and to the drive or sense electrodes of touch sensor **10**. In another embodiment, connection pads **16** may be connected to an electro-mechanical connector (such as a zero insertion force wire-to-board connector); in this embodiment, connection **18** may not need to include an FPC. This disclosure contemplates any suitable connection **18** between touch-sensor controller **12** and touch sensor **10**.

FIG. **2** illustrates an example exterior of an example active stylus **20**. Active stylus **20** may include one or more components, such as buttons **30** or sliders **32** and **34** integrated with an outer body **22**. These external components may provide for interaction between active stylus **20** and a user or between a device and a user. As an example and not by way of limitation, interactions may include communication between active stylus **20** and a device, enabling or altering functionality of active stylus **20** or a device, or providing feedback to or accepting input from one or more users. The device may by any suitable device, such as, for example and without limitation, a desktop computer, laptop computer, tablet computer, personal digital assistant (PDA), smartphone, satellite navigation device, portable media player, portable game console, kiosk computer, point-of-sale device, or other suitable device. Although this disclosure provides specific examples of particular components configured to provide particular interactions, this disclosure contemplates any suitable component configured to provide any suitable interaction. Active stylus **20** may have any suitable dimensions with outer body **22** made of any suitable material or combination of materials, such as, for example and without limitation, plastic or metal. In particular embodiments, exterior components (e.g. **30** or **32**) of active stylus **20** may interact with internal components or programming of active stylus **20** or may initiate one or more interactions with one or more devices or other active styluses **20**.

As described above, actuating one or more particular components may initiate an interaction between active stylus **20** and a user or between the device and the user. Components of active stylus **20** may include one or more buttons **30** or one or more sliders **32** and **34**. As an example and not by way of limitation, buttons **30** or sliders **32** and **34** may be mechanical or capacitive and may function as a roller, trackball, or wheel. As another example, one or more sliders **32** or **34** may function as a vertical slider **34** aligned along a longitudinal axis, while one or more wheel sliders **32** may be aligned along the circumference of active stylus **20**. In particular embodiments, capacitive sliders **32** and **34** or buttons **30** may be implemented using one or more touch-sensitive areas. Touch-sensitive areas may have any suitable shape, dimensions, location, or be made from any suitable material. As an example and not by way of limitation, sliders **32** and **34** or buttons **30** may be implemented using areas of flexible mesh formed using lines of conductive material. As another example, sliders **32** and **34** or buttons **30** may be implemented using a FPC.

Active stylus **20** may have one or more components configured to provide feedback to or accepting feedback from a

user, such as, for example and without limitation, tactile, visual, or audio feedback. Active stylus **20** may include one or more ridges or grooves **24** on its outer body **22**. Ridges or grooves **24** may have any suitable dimensions, have any suitable spacing between ridges or grooves, or be located at any suitable area on outer body **22** of active stylus **20**. As an example and not by way of limitation, ridges **24** may enhance a user's grip on outer body **22** of active stylus **20** or provide tactile feedback to or accept tactile input from a user. Active stylus **20** may include one or more audio components **38** capable of transmitting and receiving audio signals. As an example and not by way of limitation, audio component **38** may contain a microphone capable of recording or transmitting one or more users' voices. As another example, audio component **38** may provide an auditory indication of a power status of active stylus **20**. Active stylus **20** may include one or more visual feedback components **36**, such as a light-emitting diode (LED) indicator. As an example and not by way of limitation, visual feedback component **36** may indicate a power status of active stylus **20** to the user.

One or more modified surface areas **40** may form one or more components on outer body **22** of active stylus **20**. Properties of modified surface areas **40** may be different than properties of the remaining surface of outer body **22**. As an example and not by way of limitation, modified surface area **40** may be modified to have a different texture, temperature, or electromagnetic characteristic relative to the surface properties of the remainder of outer body **22**. Modified surface area **40** may be capable of dynamically altering its properties, for example by using haptic interfaces or rendering techniques. A user may interact with modified surface area **40** to provide any suitable functionally. For example and not by way of limitation, dragging a finger across modified surface area **40** may initiate an interaction, such as data transfer, between active stylus **20** and a device.

One or more components of active stylus **20** may be configured to communicate data between active stylus **20** and the device. For example, active stylus **20** may include one or more tips **26** or nibs. Tip **26** may include one or more electrodes configured to communicate data between active stylus **20** and one or more devices or other active styluses. Tip **26** may be made of any suitable material, such as a conductive material, and have any suitable dimensions, such as, for example, a diameter of 1 mm or less at its terminal end. Active stylus **20** may include one or more ports **28** located at any suitable location on outer body **22** of active stylus **20**. Port **28** may be configured to transfer signals or information between active stylus **20** and one or more devices or power sources. Port **28** may transfer signals or information by any suitable technology, such as, for example, by universal serial bus (USB) or Ethernet connections. Although this disclosure describes and illustrates a particular configuration of particular components with particular locations, dimensions, composition and functionality, this disclosure contemplates any suitable configuration of suitable components with any suitable locations, dimensions, composition, and functionality with respect to active stylus **20**.

FIG. **3** illustrates an example internal components of example active stylus **20**. Active stylus **20** may include one or more internal components, such as a controller **50**, sensors **42**, memory **44**, or power source **48**. In particular embodiments, one or more internal components may be configured to provide for interaction between active stylus **20** and a user or between a device and a user. In other particular embodiments, one or more internal components, in conjunction with one or more external components described above, may be configured to provide interaction between active stylus **20** and a user or between a device and a user. As an example and not by way of limitation, interactions may include communication between active stylus **20** and a device, enabling or altering functionality of active stylus **20** or a device, or providing feedback to or accepting input from one or more users.

Controller **50** may be a microcontroller or any other type of processor suitable for controlling the operation of active stylus **20**. Controller **50** may be one or more ICs—such as, for example, general-purpose microprocessors, microcontrollers, PLDs, PLAs, or ASICs. Controller **50** may include a processor unit, a drive unit, a sense unit, and a storage unit. The drive unit may supply signals to electrodes of tip **26** through center shaft **41**. The drive unit may also supply signals to control or drive sensors **42** or one or more external components of active stylus **20**. The sense unit may sense signals received by electrodes of tip **26** through center shaft **41** and provide measurement signals to the processor unit representing input from a device. The sense unit may also sense signals generated by sensors **42** or one or more external components and provide measurement signals to the processor unit representing input from a user. The processor unit may control the supply of signals to the electrodes of tip **26** and process measurement signals from the sense unit to detect and process input from the device. The processor unit may also process measurement signals from sensors **42** or one or more external components. The storage unit may store programming for execution by the processor unit, including programming for controlling the drive unit to supply signals to the electrodes of tip **26**, programming for processing measurement signals from the sense unit corresponding to input from the device, programming for processing measurement signals from sensors **42** or external components to initiate a pre-determined function or gesture to be performed by active stylus **20** or the device, and other suitable programming, where appropriate. As an example and not by way of limitation, programming executed by controller **50** may electronically filter signals received from the sense unit. Although this disclosure describes a particular controller **50** having a particular implementation with particular components, this disclosure contemplates any suitable controller having any suitable implementation with any suitable components.

In particular embodiments, active stylus **20** may include one or more sensors **42**, such as touch sensors, gyroscopes, accelerometers, contact sensors, or any other type of sensor that detect or measure data about the environment in which active stylus **20** operates. Sensors **42** may detect and measure one or more characteristic of active stylus **20**, such as acceleration or movement, orientation, contact, pressure on outer body **22**, force on tip **26**, vibration, or any other suitable characteristic of active stylus **20**. As an example and not by way of limitation, sensors **42** may be implemented mechanically, electronically, or capacitively. As described above, data detected or measured by sensors **42** communicated to controller **50** may initiate a pre-determined function or gesture to be performed by active stylus **20** or the device. In particular embodiments, data detected or received by sensors **42** may be stored in memory **44**. Memory **44** may be any form of memory suitable for storing data in active stylus **20**. In other particular embodiments, controller **50** may access data stored in memory **44**. As an example and not by way of limitation, memory **44** may store programming for execution by the processor unit of controller **50**. As another example, data measured by sensors **42** may be processed by controller **50** and stored in memory **44**.

Power source **48** may be any type of stored-energy source, including electrical or chemical-energy sources, suitable for powering the operation of active stylus **20**. In particular

embodiments, power source **48** may be charged by energy from a user or device. As an example and not by way of limitation, power source **48** may be a rechargeable battery that may be charged by motion induced on active stylus **20**. In other particular embodiments, power source **48** of active stylus **20** may provide power to or receive power from the device. As an example and not by way of limitation, power may be inductively transferred between power source **48** and a power source of the device.

FIG. **4** illustrates an example active stylus **20** with an example device **52**. Device **52** may have a display (not shown) and a touch sensor with a touch-sensitive area **54**. Device **52** display may be a liquid crystal display (LCD), a LED display, a LED-backlight LCD, or other suitable display and may be visible though a cover panel and substrate (and the drive and sense electrodes of the touch sensor disposed on it) of device **52**. Although this disclosure describes a particular device display and particular display types, this disclosure contemplates any suitable device display and any suitable display types.

Device **52** electronics may provide the functionality of device **52**. As example and not by way of limitation, device **52** electronics may include circuitry or other electronics for wireless communication to or from device **52**, execute programming on device **52**, generating graphical or other user interfaces (UIs) for device **52** display to display to a user, managing power to device **52** from a battery or other power source, taking still pictures, recording video, other suitable functionality, or any suitable combination of these. Although this disclosure describes particular device electronics providing particular functionality of a particular device, this disclosure contemplates any suitable device electronics providing any suitable functionality of any suitable device.

In particular embodiments, active stylus **20** and device **52** may be synchronized prior to communication of data between active stylus **20** and device **52**. As an example and not by way of limitation, active stylus **20** may be synchronized to device through a pre-determined bit sequence transmitted by the touch sensor of device **52**. As another example, active stylus **20** may be synchronized to device by processing the drive signal transmitted by drive electrodes of the touch sensor of device **52**. Active stylus **20** may interact or communicate with device **52** when active stylus **20** is brought in contact with or in proximity to touch-sensitive area **54** of the touch sensor of device **52**. In particular embodiments, interaction between active stylus **20** and device **52** may be capacitive or inductive. As an example and not by way of limitation, when active stylus **20** is brought in contact with or in the proximity of touch-sensitive area **54** of device **52**, signals generated by active stylus **20** may influence capacitive nodes of touch-sensitive area of device **52** or vice versa. As another example, a power source of active stylus **20** may be inductively charged through the touch sensor of device **52**, or vice versa. Although this disclosure describes particular interactions and communications between active stylus **20** and device **52**, this disclosure contemplates any suitable interactions and communications through any suitable means, such as mechanical forces, current, voltage, or electromagnetic fields.

In particular embodiments, measurement signal from the sensors of active stylus **20** may initiate, provide for, or terminate interactions between active stylus **20** and one or more devices **52** or one or more users, as described above. Interaction between active stylus **20** and device **52** may occur when active stylus **20** is contacting or in proximity to device **52**. As an example and not by way of limitation, a user may perform a gesture or sequence of gestures, such as shaking or inverting active stylus **20**, whilst active stylus **20** is hovering above touch-sensitive area **54** of device **52**. Active stylus may interact with device **52** based on the gesture performed with active stylus **20** to initiate a pre-determined function, such as authenticating a user associated with active stylus **20** or device **52**. Although this disclosure describes particular movements providing particular types of interactions between active stylus **20** and device **52**, this disclosure contemplates any suitable movement influencing any suitable interaction in any suitable way.

As described above in connection with FIG. **1**, in particular embodiments, a touch sensor (e.g., touch sensor **10** illustrated in FIG. **1**) may include an array of drive and sense electrodes or an array of electrodes of a single type. These electrodes may be coupled to a controller (e.g., controller **12** illustrated in FIG. **1**) by specific tracks (e.g., tracks **14** illustrated in FIG. **1**). The drive unit of the controller may supply drive signals to the drive electrodes through some tracks, and the sense unit of the controller may sense charge at the capacitive nodes through other tracks. The electrodes may be arranged in various patterns and this disclosure contemplates any suitable patterns for the electrode arrangements. For example, FIG. **5** illustrates an example array of electrodes arranged in a X-Y grid pattern. In particular embodiments, the drive electrodes may be arranged along one set of lines (e.g., the X lines: X_1 to X_n) and the sense electrodes may be arranged along another set of lines (e.g., the Y lines: Y_1 to Y_n). The capacitive nodes are at one or more intersections of the X and Y lines. A touch-sensitive area **500** may be populated with these electrodes.

In particular embodiments, to determine the location of an object, such as a stylus or a user's finger, within a touch-sensitive area (e.g., touch-sensitive area **500**), a scan of the electrodes or coordinates within the touch-sensitive area may be performed (e.g., driving the drive electrodes and scanning the capacitive nodes within touch-sensitive area **500**). In some implementations, the drive electrodes are driven one line at a time. More specifically, a number of pulses (e.g., 3 or 4 pulses) is sent down each line of drive electrodes (e.g., each X line), and for each pulse, a number of signal samples (e.g., 1 or 2 samples) is read by scanning the corresponding capacitive nodes. For example, in FIG. **5**, the drive electrodes along the X_1 line may be driven first; the charge is transferred through the capacitive coupling between the drive and sense lines; and the corresponding capacitive nodes along the Y lines (e.g., Y_1 to Y_n) may be scanned to take the signal samples. Then, the drive electrodes along the X_2 line are driven next; the charge is again transferred through the capacitive coupling between the drive and sense lines; and the corresponding capacitive nodes along the Y lines are scanned to take the signal samples. And so on, until the electrodes down the last line, X_n, are driven and the corresponding capacitive nodes down the Y lines are scanned to take the signal samples. The samples may be digitally quantized (e.g., via an analog-to-digital converter (ADC)). The digital samples are then transmitted in individual frames. In particular embodiments, a frame includes a full scan of some or all the capacitive nodes within a touch-sensitive area. As an example, in the case illustrated in FIG. **5**, a frame includes [M×N] samples, where N denotes the number of X lines (e.g., drive lines) and M denotes the number of receive line.

In particular embodiments, active stylus **20** receives the signal or signals from one or more drive lines (e.g., the X lines in its vicinity) of device **52**. The stylus (e.g., active stylus **20**) may then process this received signal to create another signal to transmit back to device **52**. As an example, the stylus may transmit a function of the received signal (whether linear or non-linear) that is then multiplied by a gain and that may be

added to an offset value. Thus, if R is the signal received at active stylus **20** (e.g., from device **52**), T is the signal transmitted by active stylus **20** (e.g., back to device **52**), f is a function (whether linear or non-linear), A is a gain factor, and B is an offset, the transmitted signal T may be written as:

$$T=A*f(R)+B.$$

The signal R received by the stylus may be the series of pulses sent down each drive line that active stylus **20** is able to detect. In particular embodiments, the signal T transmitted by the stylus may also be a series of pulses. The transmitted signal T will create a transfer of charge through capacitive coupling between active stylus **20** and the sense lines (e.g., Y_1 to Y_n) of touch-sensitive area **500**. Device **52**, and, in particular embodiments, touch controller **12** may then receive samples of transmitted signal T via a scan of the nodes along the sense lines of touch-sensitive area **500**. As described above, these samples may be digitally quantized and may be transmitted in individual frames (each frame including, for example, a full scan of the capacitive nodes in touch-sensitive area **500**).

Active stylus **20** may transmit additional data to device **52** or touch controller **12** via the pulses that make up the transmitted signal T. As an example, active stylus **20** may transmit data regarding stylus status or information gathered from sensors **42** (e.g., pressure data, touch data, accelerometer data, or gyroscope data), power source **48** (e.g., battery life), electrodes in active stylus tip **26**, memory **44**, controller **50**, buttons **30** (e.g. whether a button has been pressed), sliders **32**, or any other data gathered by any other component of active stylus **20**.

The stylus may transmit this data to device **52** or touch controller **12** by modulating the data onto the pulses that make up transmitted signal T. The modulation of the data may occur, for example, in controller **50** and be transmitted via center shaft **41** and through electrodes in active stylus tip **26**. As an example of data modulation, active stylus **20** may change the amplitude (i.e., amplitude shift keying including on-off keying), phase (i.e., phase shift keying), or frequency (i.e., frequency shift keying) of the pulses sent in order to transmit information. In particular embodiments, this modulation of the data may include changing the amplitude by changing the gain A used to create transmitted signal T. In yet other embodiments, this modulation of the data may include changing the amplitude by changing the offset B used to create transmitted signal T. In yet other embodiments, the modulation of the data may include changing the frequency or phase by changing the function f used to create transmitted signal T.

In particular embodiments, active stylus **20** may transmit modulated data on a pulse-by-pulse basis. As an example, the stylus may wish to transmit information regarding pressure data gathered from a pressure sensor. The stylus may digitize this pressure information using an analog-to-digital converter (ADC). The bits of the digitized pressure information value may be transmitted by the stylus such that one bit of data is transmitted per pulse. If, in this example, the stylus uses amplitude shift keying to modulate the data, then at each pulse, the stylus will adjust the amplitude of the pulse to be one of two pre-set amplitude values. In the case of on-off shift keying, the amplitude value that represents the binary value "0" is itself 0, and the second amplitude value may represent the binary value "1." The touch controller **12** may know the pre-set amplitude values, as well, and with this information may demodulate the bit stream sent through the series of pulses and recover the pressure data. Thus, in this manner, the bits that encode the value of the pressure information may be transmitted one at a time, one bit per pulse transmitted, using variations in the amplitudes of the pulses.

FIG. **6** illustrates an example embodiment of the transmission of data from active stylus **20** to touch controller **12** on a pulse-by-pulse basis using on-off keying. Pulses **611** and **612** each have an amplitude of 'a', which may represent the binary value "0." Pulses **622** and **623** each have an amplitude of 'b', which may represent the binary value "1." Thus, the bit stream of FIG. **6** conveys the bits "0" "0" "0" "1" "1" "1" "0" "0" "0" from active stylus **20** to touch controller **12**. Amplitude values 'a' and 'b' form the set of two amplitude values that both active stylus and touch controller **12** know, so that the signal may be demodulated by touch controller **12**.

Although the foregoing example described digital modulation of data on a pulse-by-pulse basis, analog data may also be modulated on a pulse-by-pulse basis. As an example, if the pressure data is not digitized, it may still be conveyed from the stylus to device **52** or controller **12** using amplitude changes in the pulses. In this example, the value of the analog pressure data may be added to the standard offset value B for each pulse. By doing this, the amplitude of each pulse can convey the actual, analog value of the pressure data. Touch controller **12** may, in particular embodiments, recover the value of the pressure data by knowing the value B ahead of time (and subtracting B from the amplitude of the pulse received from the stylus). Each pulse in this example, therefore, conveys more than simply one bit of information it conveys the actual value of the pressure data. In particular embodiments, the value of the pressure data may be quantized.

In particular embodiments, active stylus **20** may transmit modulated data on a frame-by-frame basis. As an example, the stylus may wish to transmit information regarding pressure data gathered from a pressure sensor. The stylus may digitize this pressure information using an analog-to-digital converter (ADC). The bits of the digitized pressure information value may be transmitted by the stylus such that one bit of data is transmitted per frame. Thus, if the frame rate is 200 Hz, the data rate (given one bit per frame) would be 200 bits per second. If, in this example, the stylus uses amplitude shift keying to modulate the data, then at each frame, the stylus will choose one of two pre-set amplitude values to use for every pulse transmitted in that frame. In the case of on-off shift keying, the amplitude value that represents the binary value "0" is itself 0, and the second amplitude value may represent the binary value "1." The touch controller **12** may know the pre-set amplitude values, as well, and with this information may demodulate the bit stream sent through the series of frames (i.e., the changing pulse amplitudes from frame to frame) and recover the pressure data. Thus, in this manner, the bits that encode the value of the pressure information may be transmitted one at a time, one bit per frame transmitted, using variations in the amplitudes of the pulses.

Although the foregoing example described digital modulation of data on a frame-by-frame basis, analog data may also be modulated on a frame-by-frame basis. As an example, if the pressure data is not digitized, it may still be conveyed from the stylus to device **52** or touch controller **12** using amplitude changes in the pulses. In this example, the value of the analog pressure data may be added to the standard offset value B for every pulse in a frame. By doing this, the amplitude of the pulses in a frame can convey the actual, analog value of the pressure data. Touch controller **12** may, in particular embodiments, recover the value of the pressure data by knowing the value B ahead of time (and subtracting B from the amplitude of the pulses received in a frame from the stylus). Each frame in this example, therefore, conveys more than simply one bit

of information—it conveys the actual value of the pressure data. In particular embodiments, the value of the pressure data may be quantized.

In particular embodiments, each data-conveying unit (whether a frame or a pulse) may convey data in and of itself, or, alternatively, it may convey data in a differential form through comparison to prior (or future) data units. As an example, active stylus **20** may transmit analog pressure data on a frame-by-frame basis using amplitude modulation. Active stylus **20** may, in each frame, convey the analog pressure data value by adding this value to the amplitude of each pulse in the frame (e.g., adding the value to offset B, a value that touch controller **12** knows), thereby conveying the pressure data directly. Alternatively, active stylus **20** may differentially convey the pressure data by adding the pressure data value to the value of the amplitude of the pulses in the previous frame and using this new amplitude value for all the pulses in the current frame. Touch controller **12** may recover the pressure data value (without needing any reference information like B) by simply subtracting the amplitude of a pulse of the current frame from the amplitude of a pulse of the previous frame. The choice of frame-based or pulse-based data transmission may, in particular embodiments, depend on the type of data being transmitted. As examples, pressure data may be transmitted on a pulse-by-pulse basis, and battery life information or input from buttons may be transmitted on a frame-by-frame basis.

Although the specific examples discussed above illustrate the use of on-off keying or amplitude shift keying, active stylus **20** may also use frequency shift keying, phase shift keying, or any other suitable data modulation scheme to transmit data (whether digital or analog) on a pulse-by-pulse or frame-by-frame basis. In particular embodiments, both frame-based and pulse-based communication schemes may be used simultaneously by active stylus **20** and device **52**. Active stylus **20** may encode the data (using, e.g., error-correcting codes) or add a packet header describing the data packet's contents or encoding before transmitting it to device **52** or touch controller **12**. Data may be transmitted in groups other than pulses or frames encompassing the entire touch-sensor area. For example, data may be transmitted on a fraction of a frame basis. Data transmission may, in particular embodiments, occur on the same communication layer (e.g., physical layer) regardless of whether the data is transmitted per frame or per fraction of a frame. Different types of data (e.g. pressure and battery life) may be communicated in a time-multiplexed manner between pulses or frames. Touch controller **12** may have the same logic as active stylus **20** for the transmission or receipt of data using any of the communication schemes described.

FIG. **7**A illustrates an example method for communicating modulated data between active stylus **20** and device **52**, including touch controller **12**. The method may start at step **710**, where active stylus **20** receives sensor data from sensors **42**. At step **720**, active stylus **20** waits to receive a carrier signal from touch controller **12**. At step **730**, a carrier signal is generated by touch controller **12** and transmitted to active stylus **20**. At step **740**, the carrier signal is modulated by active stylus **20** to include the sensor data so that the sensor data may be communicated from active stylus **20** to touch controller **12**. At step **750**, the modulated carrier signal including the sensor data is transmitted from active stylus **20** to touch controller **12**. In particular embodiments, steps **710**, **720**, **740**, and **750** may occur in controller **50** of active stylus **20**. At step **760**, touch controller **12** receives the modulated carrier signal including the sensor data. At step **770**, touch controller **12** demodulates the carrier signal and extracts the sensor data. In particular embodiments, the steps illustrated in FIG. **7**A may be repeated any number of times (e.g., any number of iterations). For example, during a second iteration, a second carrier signal may be modulated with sensor data (whether the same sensor data or different sensor data). This second signal may then be transmitted at step **750**. Although this disclosure describes and illustrates particular steps of the method of FIG. **7**A as occurring in a particular order, this disclosure contemplates any suitable steps of the method of FIG. **7**A occurring in any suitable order. Furthermore, although this disclosure describes and illustrates particular components, devices, or systems carrying out particular steps of the method of FIG. **7**A, this disclosure contemplates any suitable combination of any suitable components, devices, or systems carrying out any suitable steps of the method of FIG. **7**A.

FIG. **7**B illustrates another example method for communicating modulated data between active stylus **20** and device **52**, including touch controller **12**. The method may start at step **715**, where active stylus **20** receives sensor data from sensors **42**. At step **725**, active stylus **20** generates a carrier signal. At step **735**, the carrier signal is modulated by active stylus **20** to include the sensor data so that the sensor data may be communicated from active stylus **20** to touch controller **12**. At step **745**, the modulated carrier signal including the sensor data is transmitted from active stylus **20** to touch controller **12**. In particular embodiments, steps **715**-**745** may occur in controller **50** of active stylus **20**. At step **755**, touch controller **12** receives the modulated carrier signal including the sensor data. At step **765**, touch controller **12** demodulates the carrier signal and extracts the sensor data. In particular embodiments, the steps illustrated in FIG. **7**B may be repeated any number of times (e.g., any number of iterations). For example, during a second iteration, a second carrier signal may be modulated with sensor data (whether the same sensor data or different sensor data). This second signal may then be transmitted at step **745**. Although this disclosure describes and illustrates particular steps of the method of FIG. **7**B as occurring in a particular order, this disclosure contemplates any suitable steps of the method of FIG. **7**B occurring in any suitable order. Furthermore, although this disclosure describes and illustrates particular components, devices, or systems carrying out particular steps of the method of FIG. **7**B, this disclosure contemplates any suitable combination of any suitable components, devices, or systems carrying out any suitable steps of the method of FIG. **7**B.

In particular embodiments, modulated data may also be communicated from device **52**, including touch controller **12**, to active stylus **20**. As an example, touch controller **12** may gather data (e.g., control data or command data) from device **52** (including, for example, touch-sensitive area **500**), modulate a carrier signal to include the data, and transmit the data to active stylus **20**. In particular embodiments, the carrier signal may be generated by active stylus **20** and transmitted to touch controller **12** for modulation by touch controller **12**. In other embodiments, the carrier signal may be generated by touch controller **12** and modulated by touch controller **12**. In yet other embodiments, both active stylus **20** and touch controller **12** may generate the carrier signal for modulation. Additionally, active stylus **20** may receive the modulated carrier signal, demodulate the carrier signal, and extract the data in the signal. The carrier signal may, in particular embodiments, be modulated by active stylus **20**, touch controller **12**, or both. In yet other embodiments, two or more carrier signals may be generated or modulated by both active stylus **20** and touch controller **12**, either simultaneously or at different times, providing for implementations of frequency or phase modulation. Any or all of the variations or example

embodiments discussed with respect to the transmission of modulated data from active stylus **20** to touch controller **12** (including, for example, the type of modulation scheme) may be applied to the transmission of modulated data from touch controller **12** to active stylus **20**, and vice versa.

In particular embodiments, active stylus **20** works in synchronization with touch controller **12**. In these embodiments, active stylus **20** may detect a drive signal from the drive lines of touch-sensitive area **500** and reply back to touch controller **12** within a touch-sensing time window of the touch controller **12**. Touch controller **12** may scan the touch-sensitive area **500** until it detects active stylus **20**, and once it has detected active stylus **20**, it may use a "handshake" to confirm before transmitting data to active stylus **20**. Touch controller **12** may detect the stylus or synchronize with the stylus based on the nature of the stylus response signal (including, for example, side lobes of the stylus response due to non-linear gain at the stylus). Once active stylus **20** is detected, touch controller **12** may transmit a variable number of extra pulses down one or more drive lines (e.g., the X lines illustrated in FIG. **5**) of touch-sensitive area **500**. Active stylus **20** may, upon seeing these extra pulses, respond in a pre-determined fashion (e.g., a signature or code). After this handshake, touch controller **12** may cease to drive any X lines and may continue to listen for transmissions from active stylus **20**. Active stylus **20** may then transmit data using any of the data communication schemes described. The stylus may maintain a counter with data about past pulses it has received from device **52** (including touch-sensitive area **500** or touch controller **12**) or pulses it has transmitted. Once active stylus **20** has completed its data transmission, it may send a stop bit to let touch controller **12** know that it may restart its normal scanning or driving of touch-sensitive area **500**.

Herein, reference to a computer-readable non-transitory storage medium encompasses a semiconductor-based or other integrated circuit (IC) (such, as for example, a field-programmable gate array (FPGA) or an application-specific IC (ASIC)), a hard disk, an HDD, a hybrid hard drive (HHD), an optical disc, an optical disc drive (ODD), a magneto-optical disc, a magneto-optical drive, a floppy disk, a floppy disk drive (FDD), magnetic tape, a holographic storage medium, a solid-state drive (SSD), a RAM-drive, a SECURE DIGITAL card, a SECURE DIGITAL drive, or another suitable computer-readable non-transitory storage medium or a combination of two or more of these, where appropriate. A computer-readable non-transitory storage medium may be volatile, non-volatile, or a combination of volatile and non-volatile, where appropriate.

Herein, "or" is inclusive and not exclusive, unless expressly indicated otherwise or indicated otherwise by context. Therefore, herein, "A or B" means "A, B, or both," unless expressly indicated otherwise or indicated otherwise by context. Moreover, "and" is both joint and several, unless expressly indicated otherwise or indicated otherwise by context. Therefore, herein, "A and B" means "A and B, jointly or severally," unless expressly indicated otherwise or indicated otherwise by context.

This disclosure encompasses all changes, substitutions, variations, alterations, and modifications to the example embodiments herein that a person having ordinary skill in the art would comprehend. Moreover, reference in the appended claims to an apparatus or system or a component of an apparatus or system being adapted to, arranged to, capable of, configured to, enabled to, operable to, or operative to perform a particular function encompasses that apparatus, system, component, whether or not it or that particular function is activated, turned on, or unlocked, as long as that apparatus, system, or component is so adapted, arranged, capable, configured, enabled, operable, or operative.

What is claimed is:

1. A stylus comprising:
one or more sensors;
one or more electrodes configured to communicate with a device by receiving signals from and transmitting signals to a touch sensor of the device; and
one or more computer-readable non-transitory storage media embodying logic that is operable when executed to:
receive sensor data from the one or more sensors;
receive a first signal generated by the device;
generate a second signal by modulating a carrier signal based on the sensor data; and
transmit to the device, in response to the first signal, the second signal, the sensor data being obtainable by demodulating the second signal.

2. The stylus of claim **1**, wherein the first signal is the carrier signal modulated to generate the second signal.

3. The stylus of claim **1**, wherein the second signal is generated using one of:
amplitude modulation;
frequency modulation; and
phase modulation.

4. The stylus of claim **1**, wherein:
the one or more sensors comprise a pressure sensor and a button; and
the sensor data comprises pressure data and button state data.

5. The stylus of claim **1**, wherein the sensor data is digital.

6. The stylus of claim **1**, wherein the second signal is transmitted in a single electric pulse.

7. One or more computer-readable non-transitory storage media embodying logic that is operable when executed to:
receive sensor data from one or more sensors in or on a stylus, the stylus comprising one or more electrodes configured to communicate with a device by receiving signal from and transmitting signals to a touch sensor of the device;
receive a first signal generated by the device;
generate a second signal by modulating a carrier signal based on the sensor data; and
transmit to the device, in response to the first signal, the second signal, the sensor data being obtainable by demodulating the second signal.

8. The media of claim **7**, wherein the first signal is the carrier signal modulated to generate the second signal.

9. The media of claim **7**, wherein the second signal is generated using one of:
amplitude modulation;
frequency modulation; and
phase modulation.

10. The media of claim **7**, wherein:
the one or more sensors comprise a pressure sensor and a button; and
the sensor data comprises pressure data and button state data.

11. The media of claim **7**, wherein the sensor data is digital.

12. The media of claim **7**, wherein the second signal is transmitted in a single electric pulse.

13. A system comprising:
a device comprising a touch sensor; and
a stylus comprising:
one or more sensors;
one or more electrodes configured to communicate with a device by receiving signals from and transmitting signals to a touch sensor of the device; and

one or more computer-readable non-transitory storage media embodying logic that is operable when executed to:

receive sensor data from the one or more sensors;

receive a first signal generated by the device;

generate a second signal by modulating a carrier signal based on the sensor data; and

transmit to the device, in response to the first signal, the second signal, the device being operable to obtain the sensor data by demodulating the second signal.

14. The system of claim **13**, wherein the first signal is the carrier signal modulated to generate the second signal.

15. The system of claim **13**, wherein the second signal is generated using one of:

amplitude modulation;

frequency modulation; and

phase modulation.

16. The system of claim **13**, wherein:

the one or more sensors comprise a pressure sensor and a button; and

the sensor data comprises pressure data and button state data.

17. The system of claim **13**, wherein the sensor data is digital.

18. The system of claim **13**, wherein the second signal is transmitted in a single electric pulse.

* * * * *