US 20100085325A1

(19) United States

(12) Patent Application Publication

King-Smith et al.

(10) Pub. No.: US 2010/0085325 A1

(43) Pub. Date: Apr. 8, 2010

(54) COMBINATION TOUCH AND TRANSDUCER INPUT SYSTEM AND METHOD

(75) Inventors: **Oliver P. King-Smith**, Aptos, CA (US); **Bernardus H. Smit**, San Jose, CA (US); **Peyman Hadizad**, Redwood City, CA (US)

Correspondence Address:
CHRISTENSEN, O'CONNOR, JOHNSON, KINDNESS, PLLC
1420 FIFTH AVENUE, SUITE 2800
SEATTLE, WA 98101-2347 (US)

(73) Assignee: **Wacom Co., Ltd.**, Kitasaitama-gun (JP)

(21) Appl. No.: **12/568,066**

(22) Filed: **Sep. 28, 2009**

Related U.S. Application Data

(60) Provisional application No. 61/102,234, filed on Oct. 2, 2008.

Publication Classification

(51) **Int. Cl.**
G06F 3/045 (2006.01)

(52) **U.S. Cl.** **345/174**

(57) **ABSTRACT**

A combination touch and transducer input system is provided, which facilitates user input into an electronic system with a finger and/or a transducer (e.g., a stylus). The system includes a transducer configured to generate an electric field, and a sensor including an array of electrodes and a controller. The transducer is configured to transmit digital data, such as pen pressure data and switch status data, to the sensor. For example, the transducer comprises electronic circuitry configured to encode the digital data in a signal for transmission to the sensor. The sensor controller is configured to operate both in a touch sensing mode and in a transducer sensing mode. During the touch sensing mode, the controller determines a position of a proximate object (e.g., a finger) by capacitively sensing the object with the array of electrodes. During the transducer sensing mode, the controller determines a position of the transducer based on a signal received by the array of electrodes from the transducer, and also receives and decodes the digital data encoded in the received signal. Digital data can be encoded in a signal using any suitable digital modulation techniques, such as a Frequency-Shift Keying (FSK) technique.

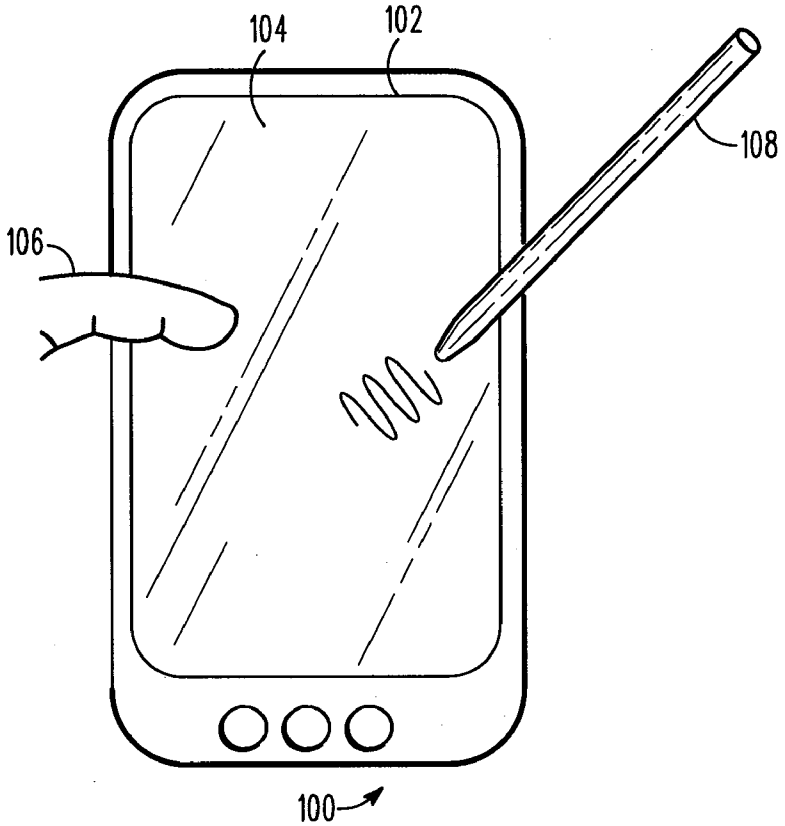

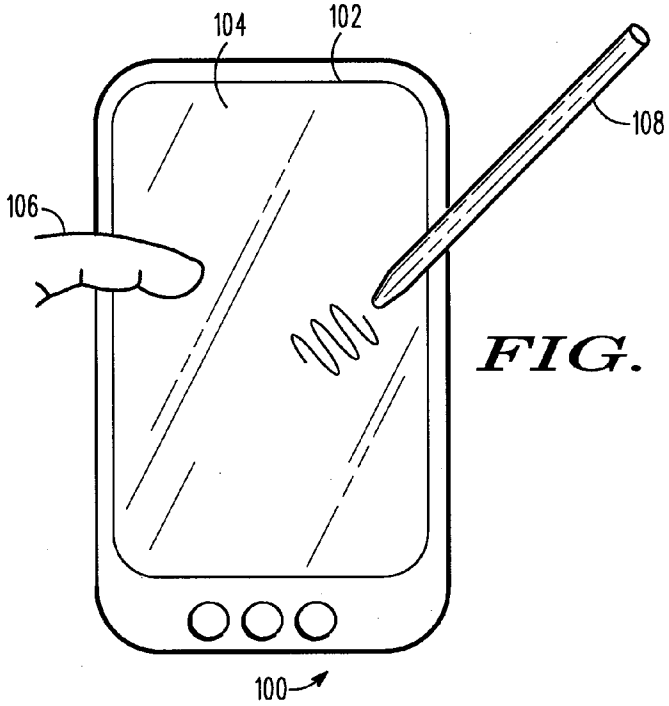

FIG. 1

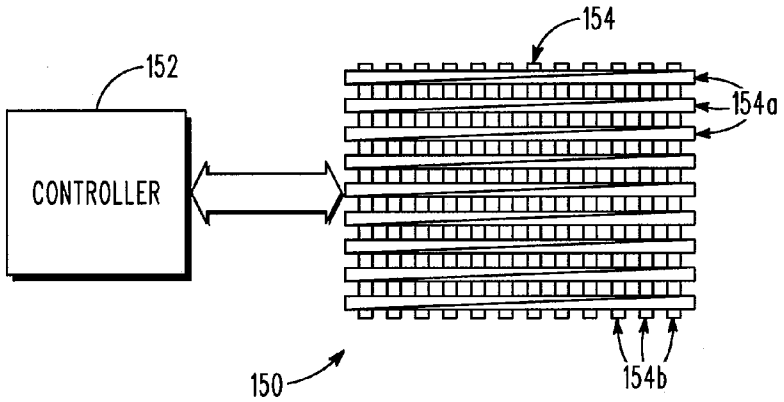

FIG. 2

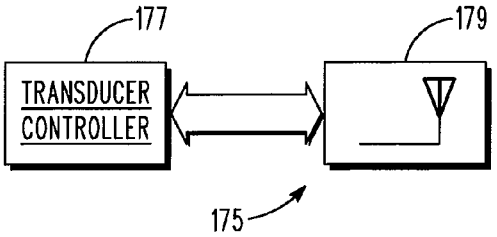

FIG. 3A

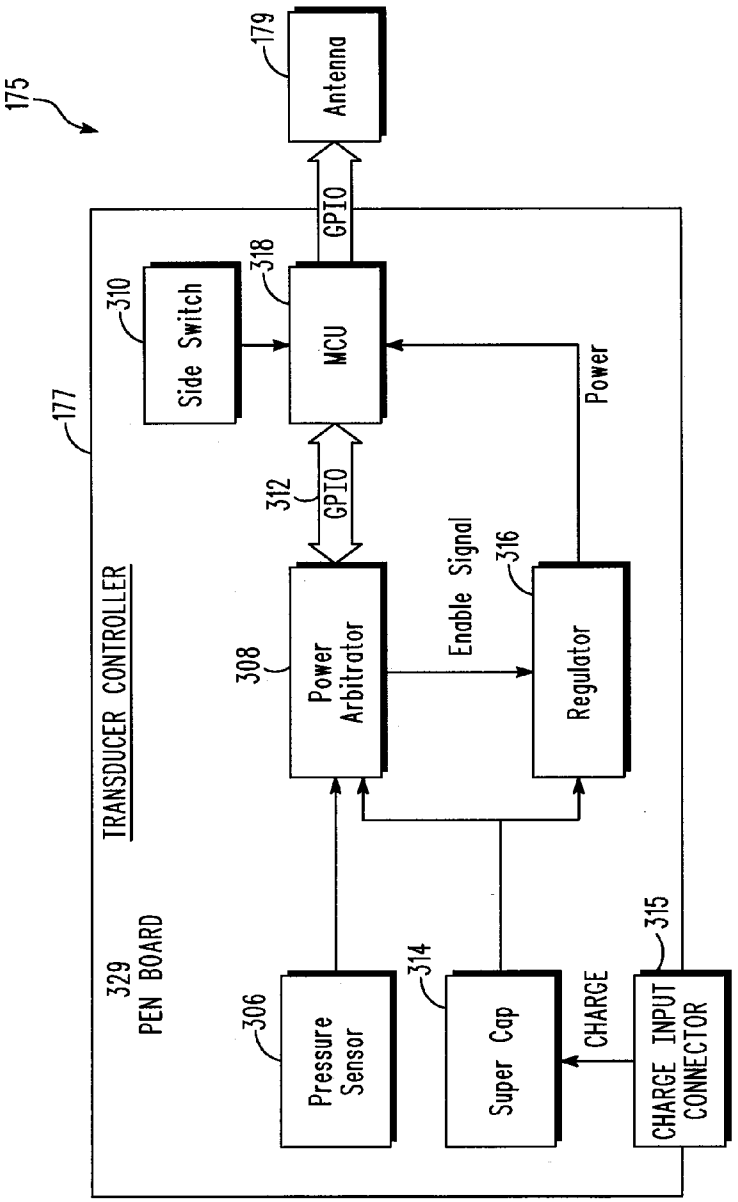
175
179
Antenna
GPIO
318
MCU
310
Side Switch
177
Power
312
GPIO
Enable Signal
316
Regulator
308
Power Arbitrator
TRANSDUCER CONTROLLER
329
PEN BOARD
315
CHARGE INPUT CONNECTOR
CHARGE
314
Super Cap
306
Pressure Sensor

FIG. 4

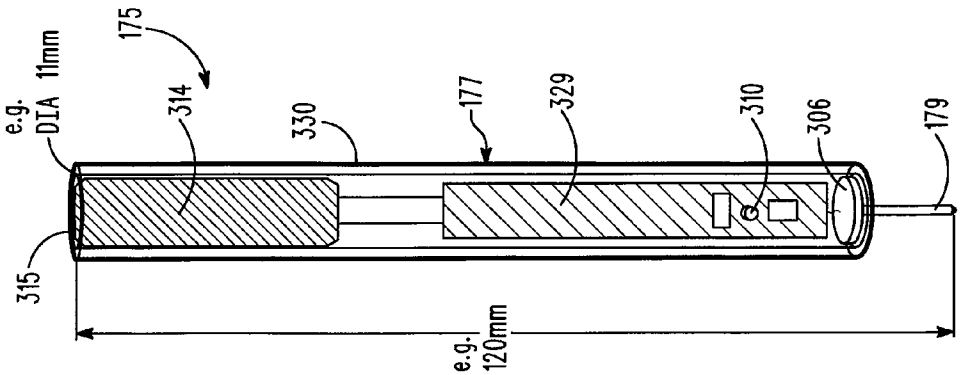
e.g. DIA 11mm
175
314
330
177
329
310
306
179
315
e.g. 120mm

FIG. 3B

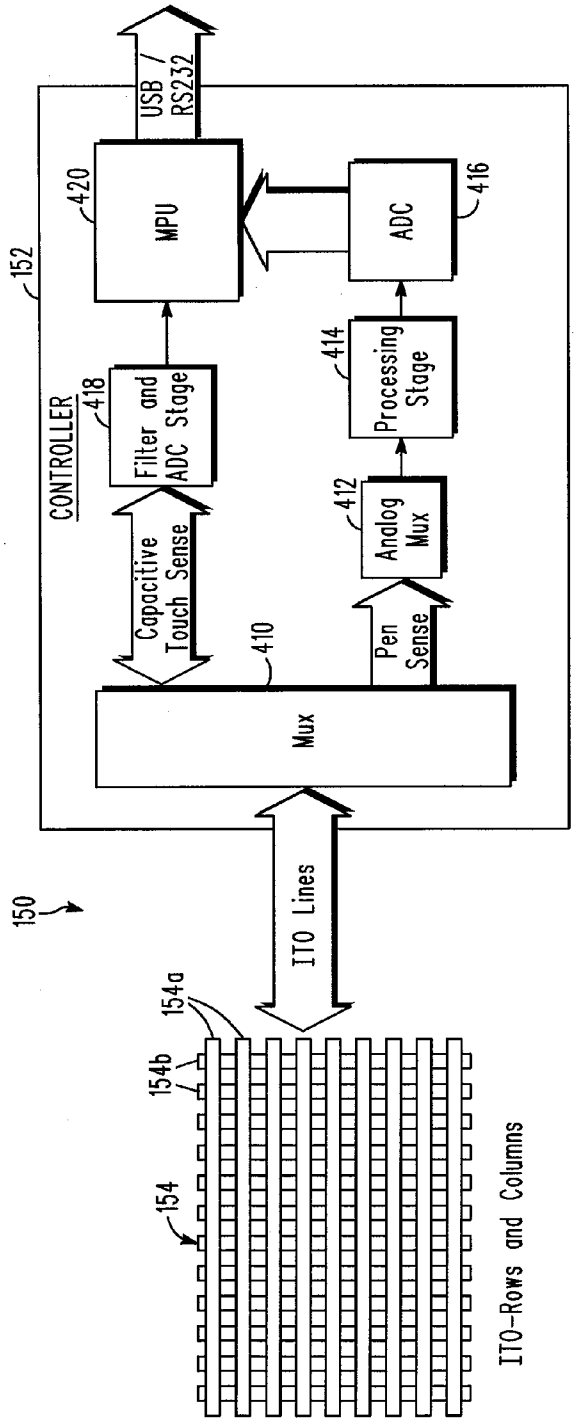
150
152
CONTROLLER
USB / RS232
420
MPU
ADC
416
418
Filter and ADC Stage
414
Processing Stage
412
Analog Mux
Capacitive Touch Sense
410
Pen Sense
Mux
ITO Lines
154a
154b
154
ITO-Rows and Columns

FIG.5A

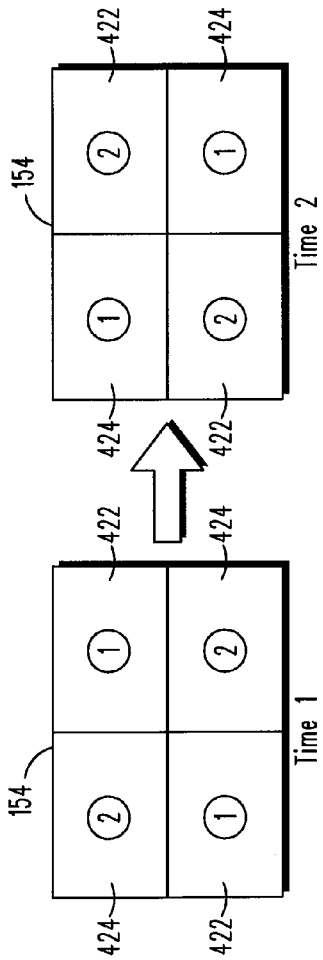
154
422
424
Time 1
Time 2

FIG. 5B

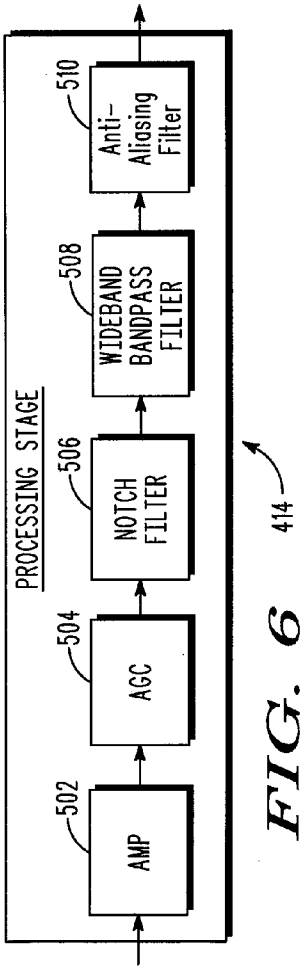

FIG. 6

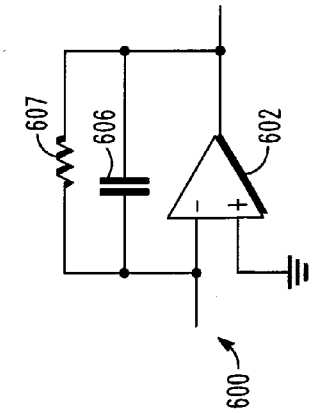

FIG. 7

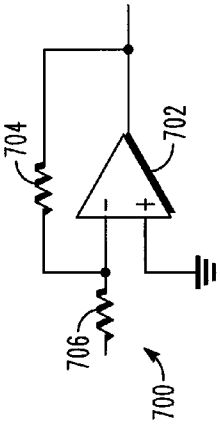

FIG. 8

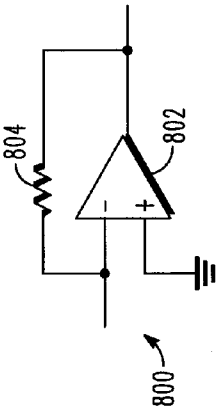

FIG. 9

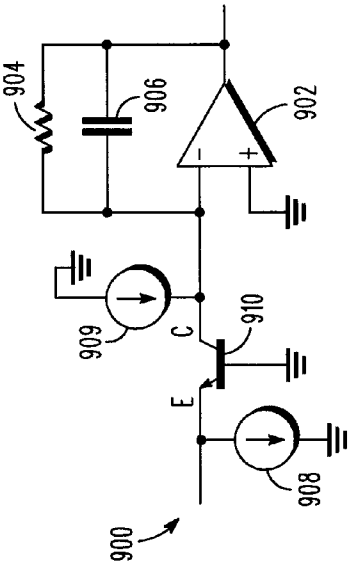

FIG. 10

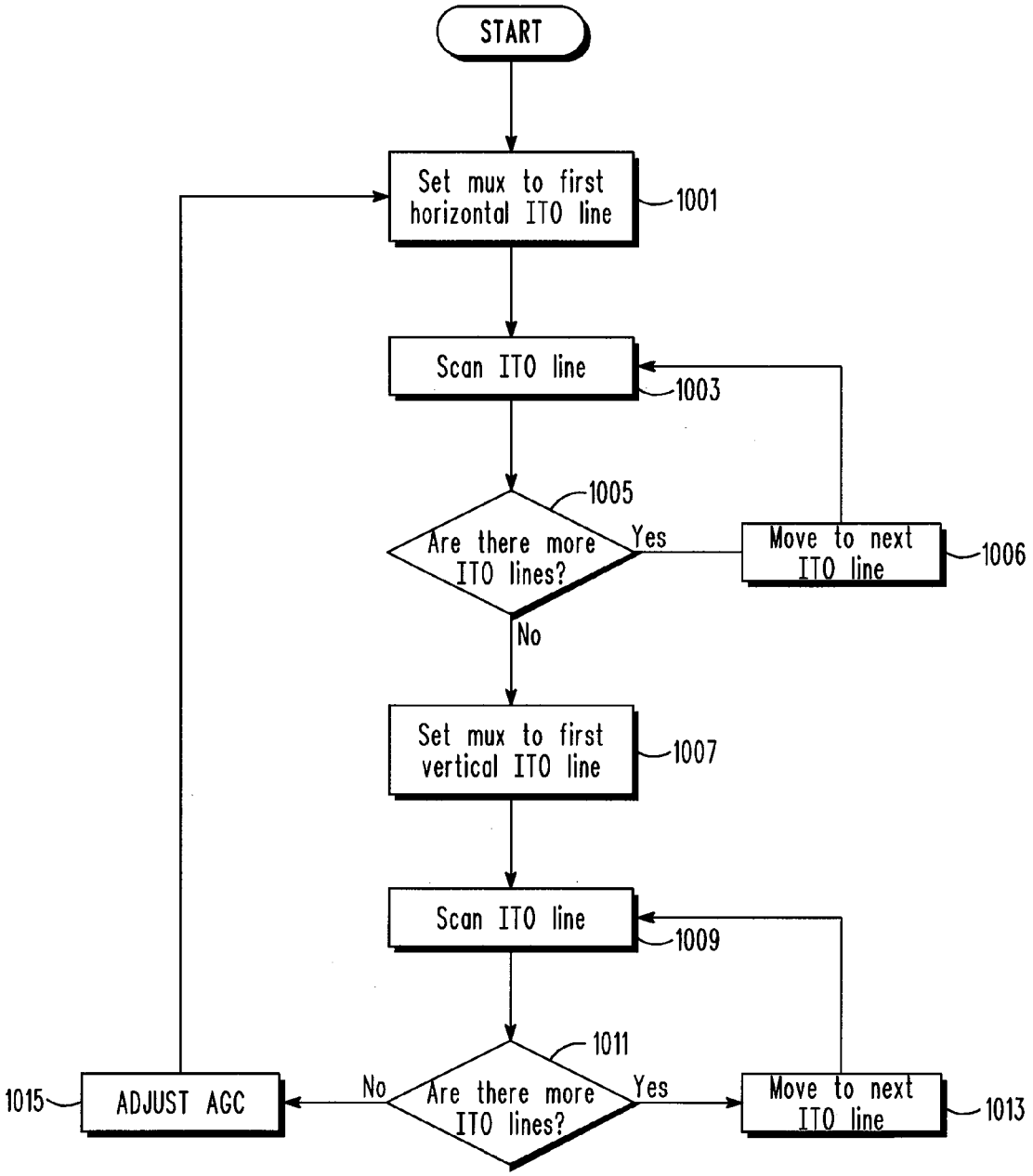
START
Set mux to first horizontal ITO line
1001
Scan ITO line
1003
1005
Are there more ITO lines?
Yes
Move to next ITO line
1006
No
Set mux to first vertical ITO line
1007
Scan ITO line
1009
1011
Are there more ITO lines?
No
Yes
Move to next ITO line
1013
1015
ADJUST AGC

FIG. 11A

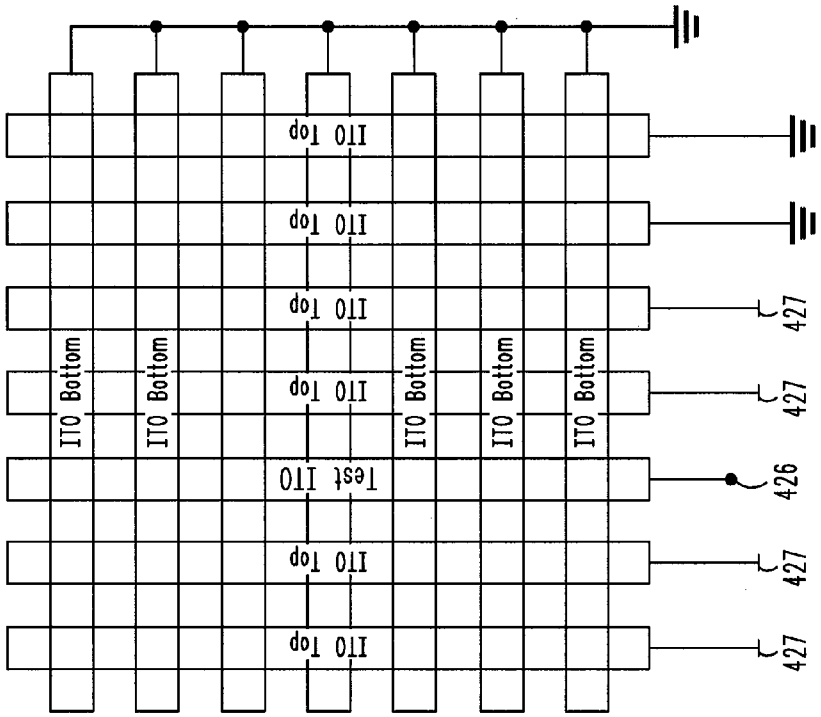

FIG. 11C

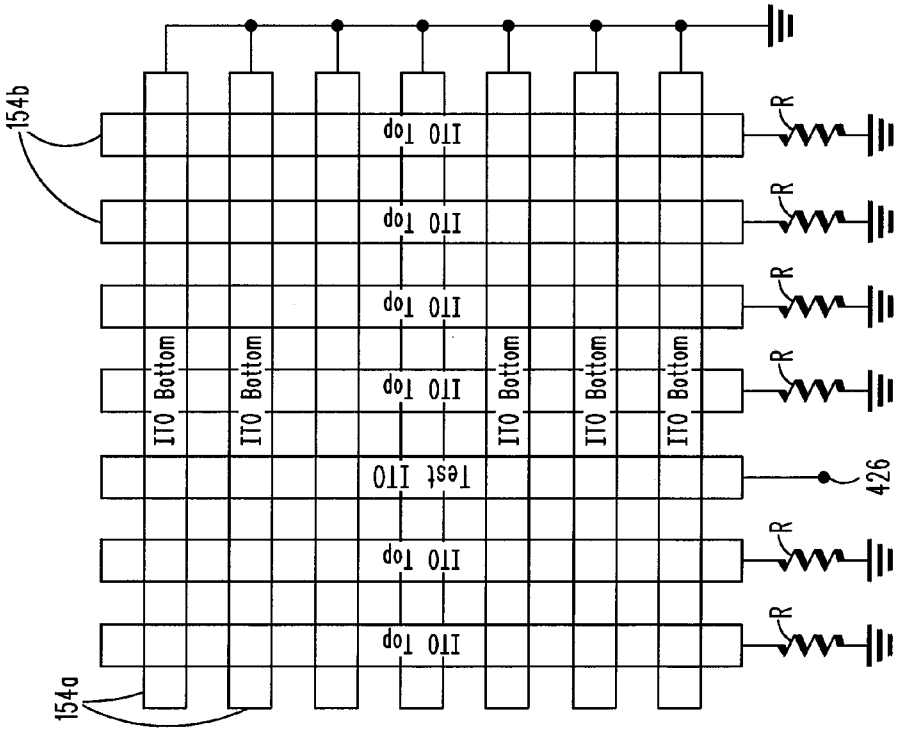

FIG. 11B

FIG. 11D

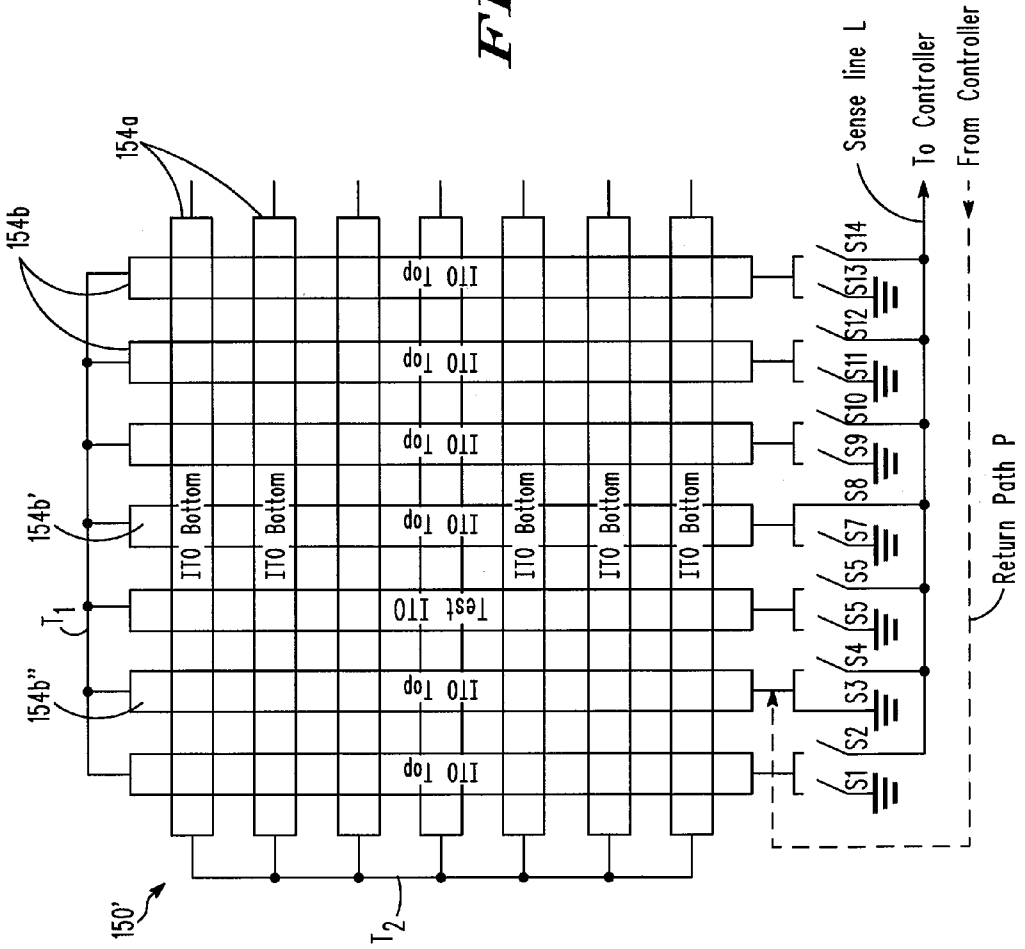
154a
154b
154b'
154b''
T_1
T_2
150'
ITO Bottom
ITO Top
Test ITO
S1
S2
S3
S4
S5
S5
S7
S8
S9
S10
S11
S12
S13
S14
Sense line L
To Controller
From Controller
Return Path P

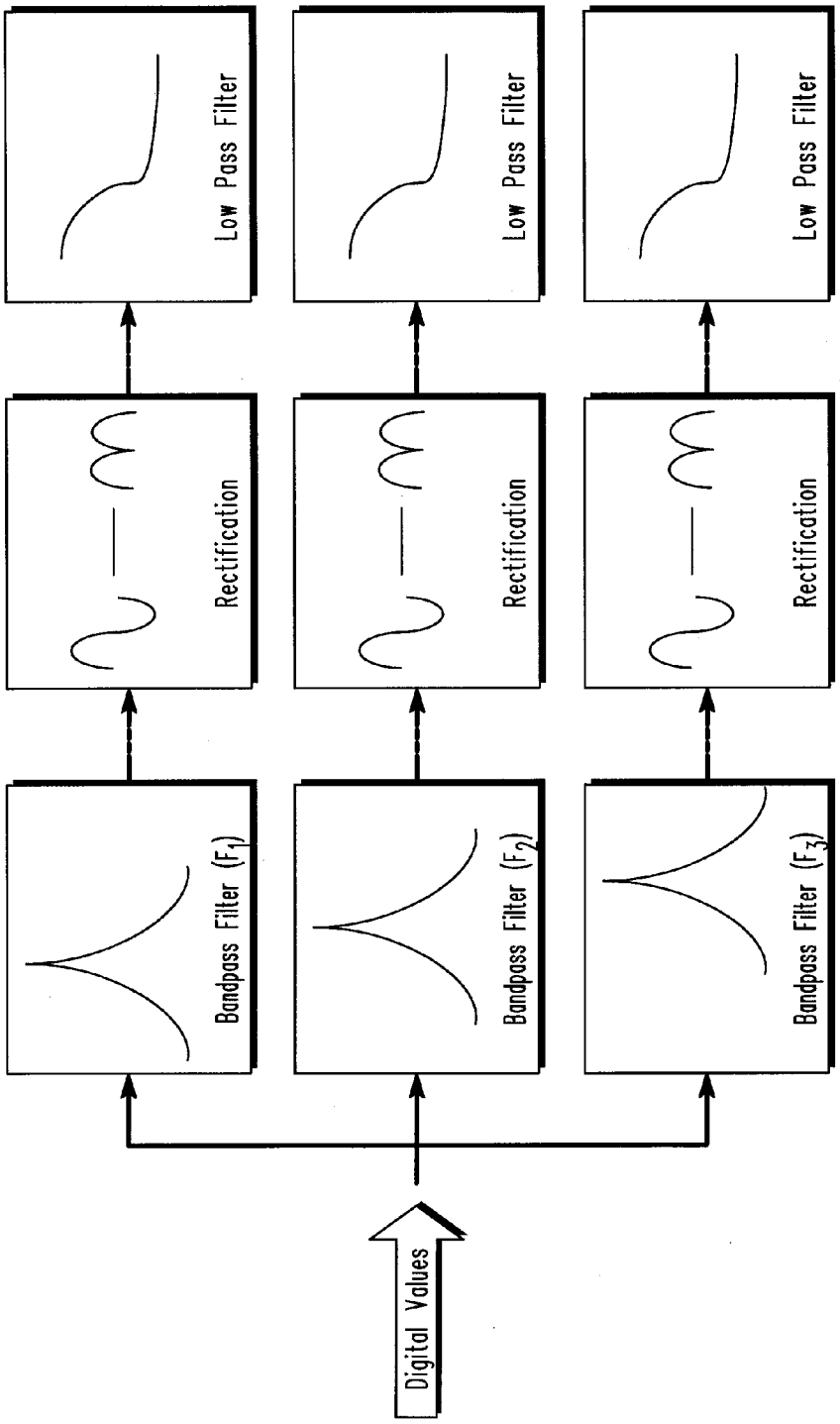
Digital Values
Bandpass Filter (F_1)
Bandpass Filter (F_2)
Bandpass Filter (F_3)
Rectification
Rectification
Rectification
Low Pass Filter
Low Pass Filter
Low Pass Filter

FIG. 12

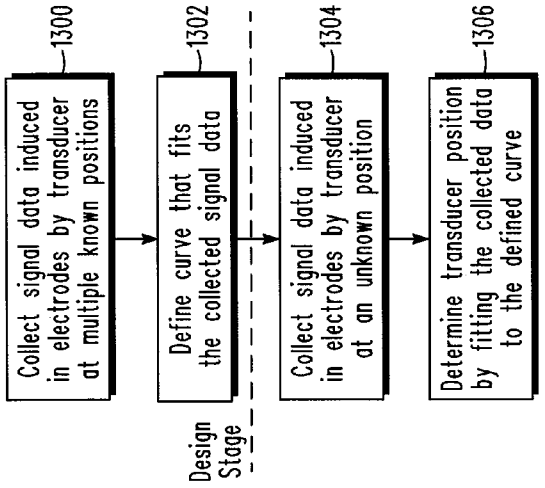

FIG. 13A

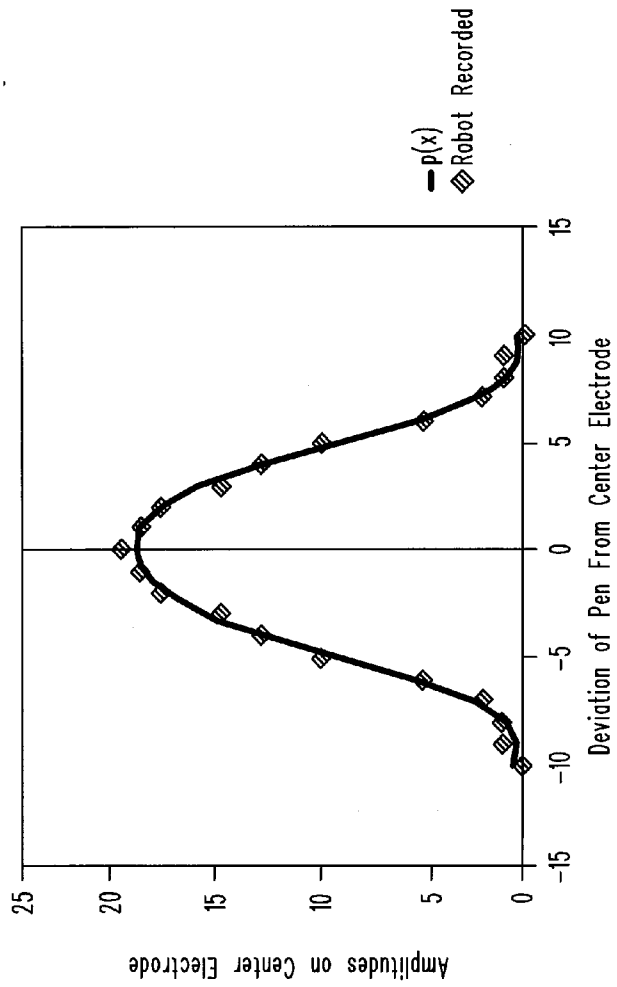

FIG. 13B

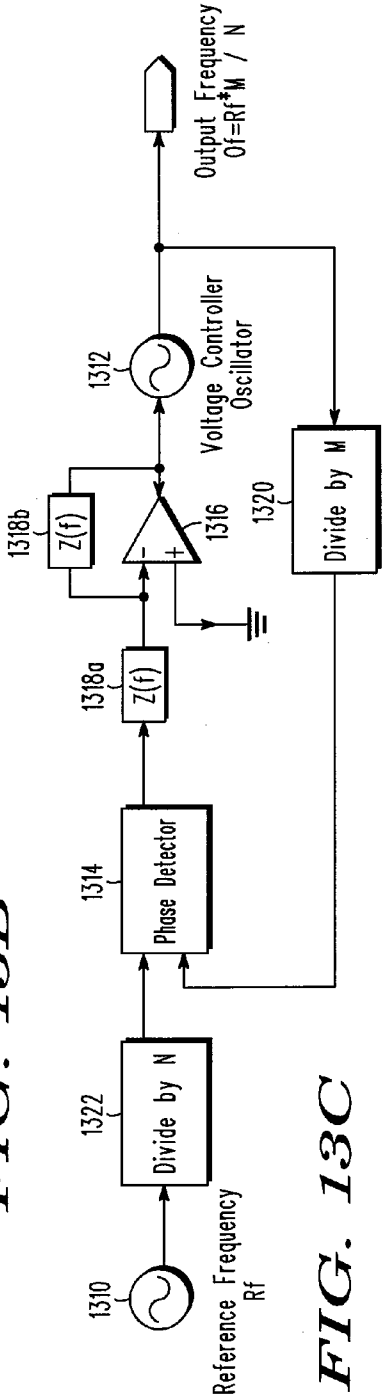

FIG. 13C

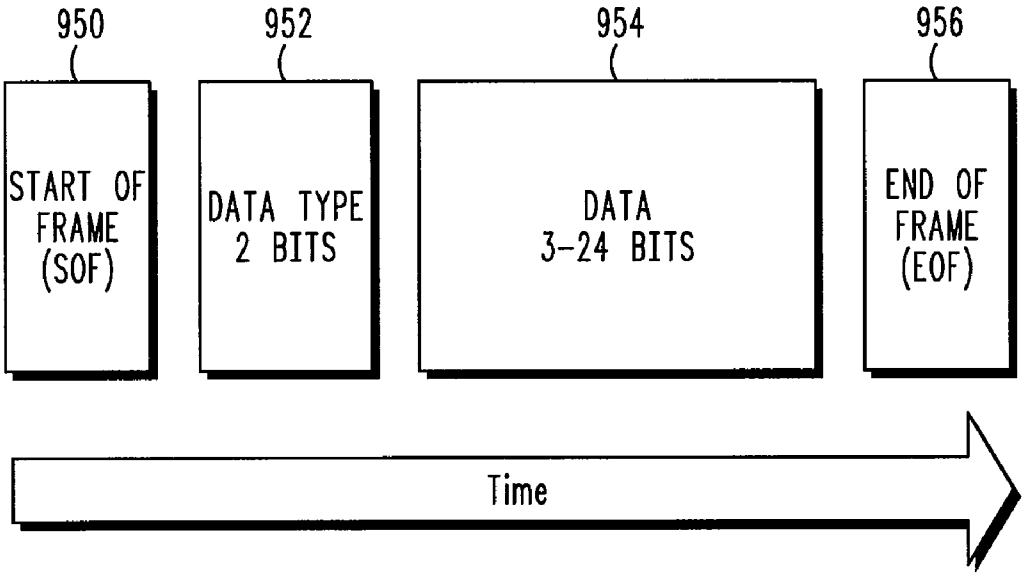
950
952
954
956
START OF FRAME (SOF)
DATA TYPE 2 BITS
DATA 3-24 BITS
END OF FRAME (EOF)
Time

FIG. 14

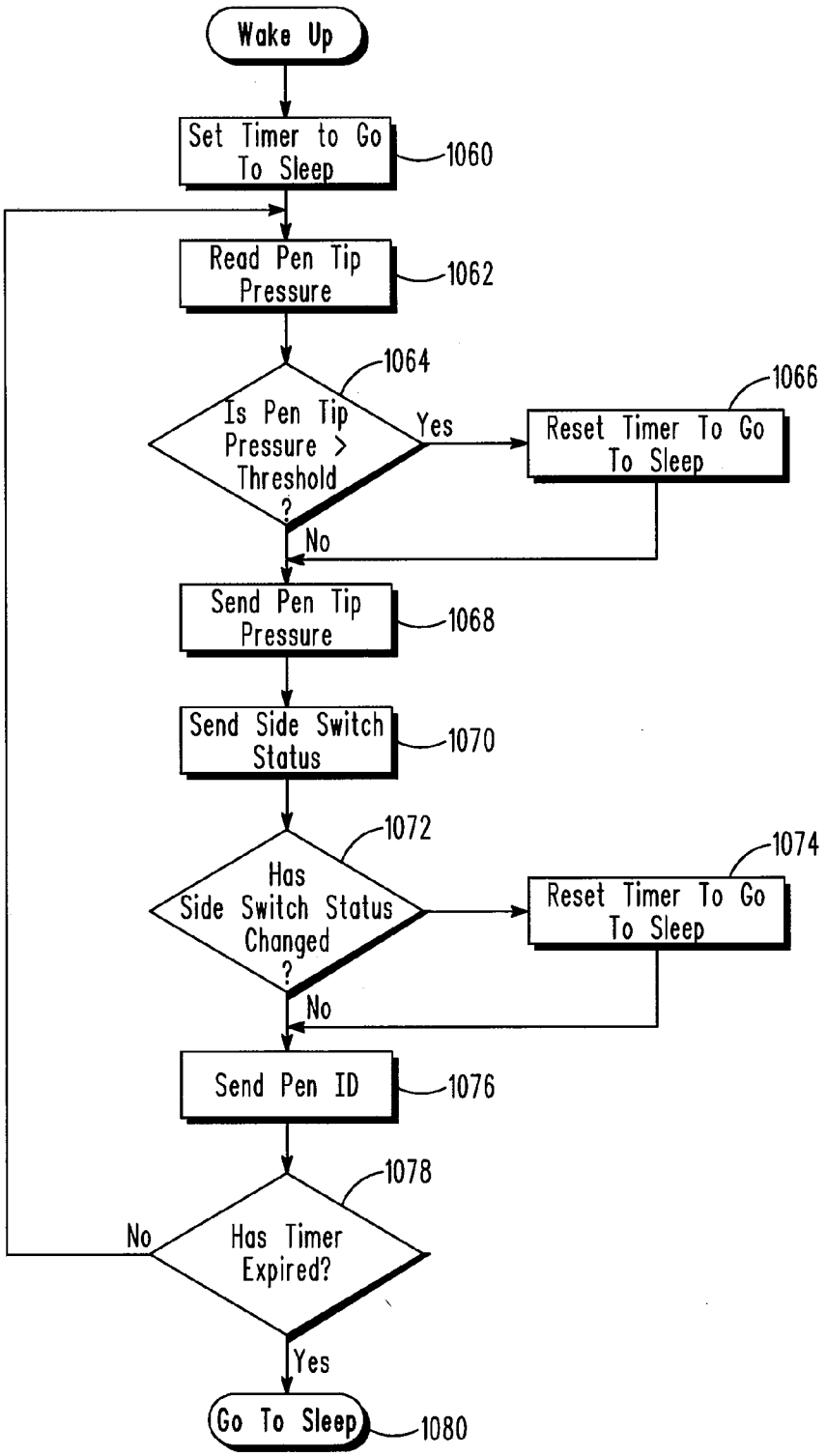
Wake Up
Set Timer to Go To Sleep
1060
Read Pen Tip Pressure
1062
1064
Is Pen Tip Pressure > Threshold ?
Yes
1066
Reset Timer To Go To Sleep
No
Send Pen Tip Pressure
1068
Send Side Switch Status
1070
1072
Has Side Switch Status Changed ?
1074
Reset Timer To Go To Sleep
No
Send Pen ID
1076
1078
Has Timer Expired?
No
Yes
Go To Sleep
1080

FIG. 15

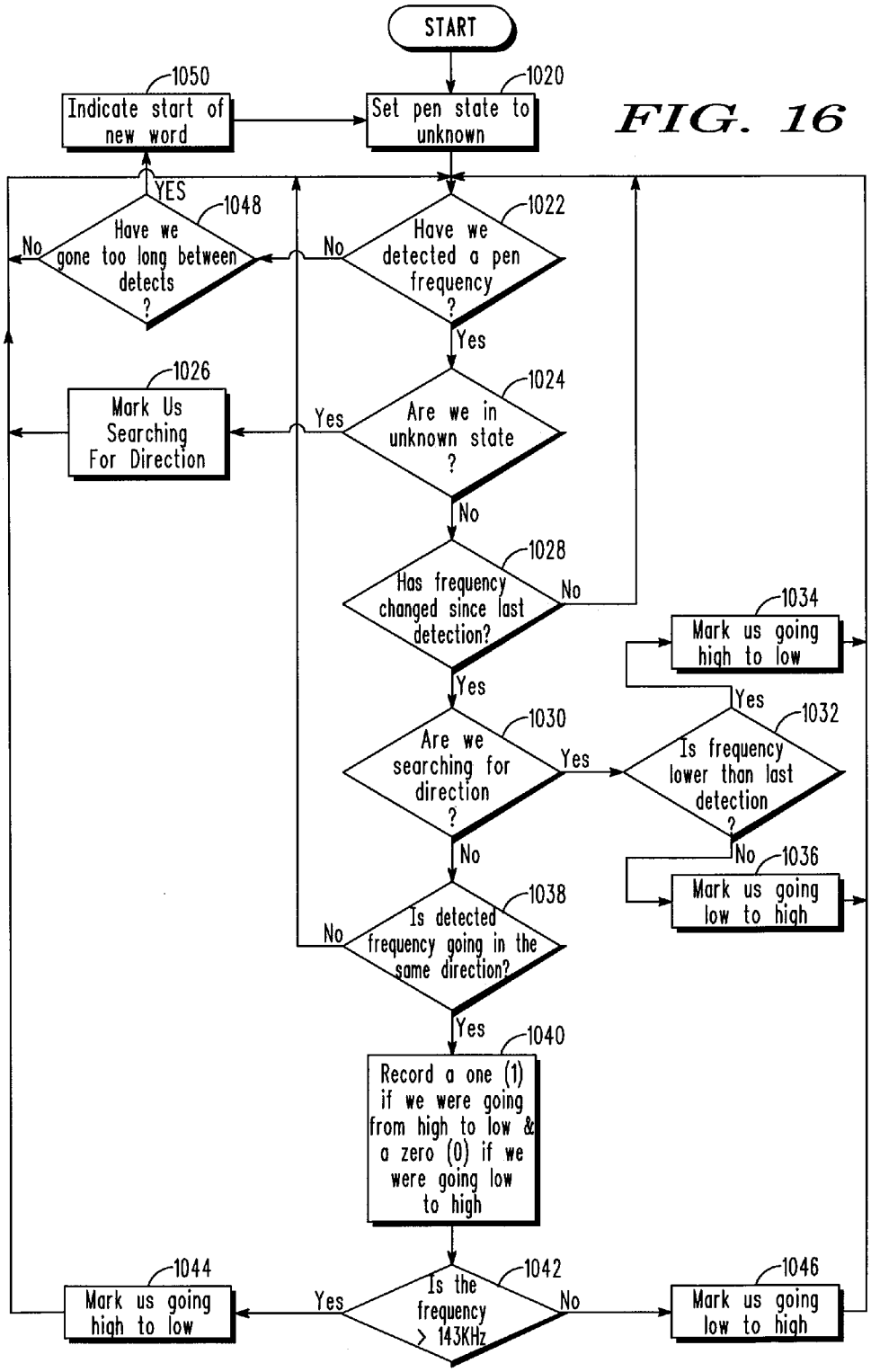
START
1050
Indicate start of new word
1020
Set pen state to unknown
FIG. 16
YES
1048
Have we gone too long between detects ?
No
1022
Have we detected a pen frequency ?
No
Yes
1026
Mark Us Searching For Direction
Yes
1024
Are we in unknown state ?
No
1028
Has frequency changed since last detection?
No
1034
Mark us going high to low
Yes
Yes
1032
Is frequency lower than last detection ?
1030
Are we searching for direction ?
Yes
No
No
1036
Mark us going low to high
1038
Is detected frequency going in the same direction?
No
Yes
1040
Record a one (1) if we were going from high to low & a zero (0) if we were going low to high
1044
Mark us going high to low
Yes
1042
Is the frequency > 143KHz
No
1046
Mark us going low to high

COMBINATION TOUCH AND TRANSDUCER INPUT SYSTEM AND METHOD

CROSS-REFERENCE TO RELATED APPLICATION

[0001] This application is based on and claims the benefit under 35 U.S.C. §119 of U.S. Provisional Application No. 61/102,234, filed Oct. 2, 2008.

FIELD OF THE INVENTION

[0002] The present invention generally relates to user interfaces for electric devices, and more specifically relates to touch sensors and digitizer systems.

BACKGROUND

[0003] A variety of different types of input devices are commonly used in a variety of different electronic systems, including computers (e.g., laptop computers, tablet computers, personal digital assistants) and communication devices (e.g., mobile phones, wireless handheld communication devices). One type of input device is generally referred to as a touch sensor or proximity sensor. A touch sensor uses a variety of different techniques to determine the position of proximate objects, such as fingers. For example, capacitive touch sensors determine the position of proximate objects by determining a change in capacitance that occurs due to the presence of proximate objects. Another type of input device is commonly referred to as a digitizer tablet, but also referred to as a graphics tablet, graphics pad, or drawing tablet. Digitizer tablets include a sensing surface upon which a user can enter input using a transducer, typically implemented as a stylus or other pen-like drawing apparatus. In typical digitizers, the transducer emits an electromagnetic signal, which is detected by the sensing surface. The electromagnetic signal detected by the sensing surface is then used and processed to determine the position of the transducer.

[0004] In general, digitizers offer increased position-detection accuracy and resolution when compared to typical touch sensors. Digitizers typically require the use of a specialized transducer for inputting. It has been desirable to combine the attributes (e.g., convenience) of touch sensors with the improved accuracy and resolution of digitizers. Unfortunately, combination touch sensor-digitizers have had limited applicability, mainly due to high cost and complexity associated with implementation, the additional three-dimensional space required to accommodate the combination, and the requirement for special types of displays that could support both touch sensing and transducer (e.g., stylus) sensing. Thus, there remains a continuing need for improved combination touch sensor and transducer-based input devices.

SUMMARY

[0005] This summary is provided to introduce a selection of concepts in a simplified form that is further described below in the Detailed Description. This summary is not intended to identify key features of the claimed subject matter nor is it intended to be used as an aid in determining the scope of the claimed subject matter.

[0006] The embodiments of the invention provide systems and methods for facilitating user input into an electronic system. Combination touch and transducer input systems are provided, which facilitate user input both with ordinary objects (e.g., fingers) and with transducers that emit an electric field for position detection.

[0007] According to one aspect of the invention, a combination touch and transducer input system is provided, which includes a transducer (e.g., a stylus), an array of electrodes, and a controller coupled to the array of electrodes. The array of electrodes and the controller together form a sensor that is used for detecting both the position of a proximate object, such as a finger, and the position of the transducer. The transducer is typically in the form of a stylus or other pen-like apparatus, and is configured to generate an electric field. The controller of the sensor is configured to operate in a proximate object sensing mode (hereinafter the "touch mode") and in a transducer sensing mode (hereinafter the "transducer mode"), either simultaneously or in an alternating manner by switching between the two modes in successive sampling periods.

[0008] When operating in the touch mode, the controller determines the position(s) of one or more proximate objects (e.g., fingers) by capacitively sensing the object(s) with the array of electrodes. In one example, the controller determines the position of each object by detecting a change in capacitance caused by that object in the array of electrodes. When operating in the transducer mode, the controller determines a position of the transducer by measuring attributes (e.g., amplitudes, phases, etc.) of a plurality of sensing signals that are induced in the array of electrodes by the electric field generated by the transducer. Specifically, as the transducer (an antenna) and each of the array of electrodes are capacitively coupled, the controller determines the position of the transducer by measuring a charge induced at each of the array of electrodes.

[0009] The transducer is further configured to send digital data to the sensor. For example, the transducer may include electronic circuitry (e.g., a microcontroller unit (MCU) or microprocessor) configured to encode digital data in the electric field for transmission to the array of electrodes, and the controller of the sensor is configured to decode the digital data received by the array of electrodes. For example, the digital data may include data related to the transducer's pen tip pressure, the transducer's switch status, or the transducer's unique ID.

[0010] According to another aspect of the invention, the transducer is configured to selectively generate an electric field at multiple frequencies and to encode digital data in frequency shifts of the generated electric field, while the controller is configured to detect the plurality of sensing signals at multiple frequencies and to decode the digital data encoded in the frequency shifts. The multiple frequencies may be determined, for example, by dividing down a base frequency, so as to avoid harmonics generated by any signal transmitted by the transducer. Any suitable Frequency-Shift Keying (FSK) technique, including the Manchester coding scheme, may be used to encode digital data. According to a further aspect of the invention, any other digital modulation technique may be used to encode digital data, including Amplitude-Shift Keying (ASK) technique, Phase-Shift Keying (PSK) technique, and Quadrature Amplitude Modulation (QAM) technique.

[0011] In accordance with another aspect of the invention, the digital data transmission may be bi-directional. That is, in addition to the transducer transmitting digital data to the controller, the controller may be configured to transmit digital data to the transducer.

[0012] According to one aspect of the invention, the transducer and the controller communicate asynchronously.

[0013] According to one aspect of the invention, the transducer is configured to selectively generate the electric field at multiple frequencies and the controller is further configured to select one (or more) of the multiple frequency channels as receiving channel(s). For example, the controller may determine a signal-to-noise ratio for each frequency channel and select the frequency channel having the highest signal-to-noise ratio as the receiving channel. According to a further aspect of the invention, when two or more combination touch and transducer input systems are provided, the transducer of the first system is configured to generate the electric field at a first frequency (or a first set of frequencies) and the transducer of the second system is configured to generate the electric field at a second frequency (or a second set of frequencies) different from the first frequency (or the first set of frequencies), to avoid cross-coupling between the two systems that may be used proximate to each other.

[0014] According to one aspect of the invention, the array of electrodes includes a first set of elongate electrodes arranged substantially in parallel with each other and extending in a first direction and a second set of elongate electrodes arranged substantially in parallel with each other and extending in a second direction that is different from the first direction. For example, the first and second directions may be generally perpendicular to each other. Each pair of at least one of the first set of elongate electrodes and at least one of the second set of elongate electrodes forms a capacitor. When operating in the touch mode, the controller is configured to supply a signal to each of the first set of elongate electrodes, detect a capacitance change reflected in a signal outputted from each of the second set of elongate electrodes, and determine the position of the proximate object based on the detected capacitance change.

[0015] When operating in the transducer mode using the electric field coupling, the controller is configured to measure attributes (e.g., amplitudes and phases) of a plurality of sensing signals outputted from both the first and second sets of elongate electrodes and calculate the position of the transducer based on the measured attributes. According to a further aspect of the invention, when operating in the transducer mode, the controller is configured to measure an attribute of a sensing signal outputted from each of the first or second set of elongate electrodes while selectively terminating (e.g., floating, terminating via a resistor to ground, or grounding) two or more of the first or second set of elongate electrodes that are adjacent to that elongate electrode being sensed, to thereby improve the quality of the sensing signal.

[0016] According to one aspect of the invention, the controller is configured to alternate between operating in the touch mode and operating in the transducer mode in successive sampling periods of the system. According to another aspect of the invention, the operating mode may be selected by a user of the system. According to a further aspect of the invention, the controller is configured to selectively divide the array of electrodes into a touch mode section and a transducer mode section, and to simultaneously operate in the touch mode in the touch mode section and in the transducer mode in the transducer mode section. The touch mode section may consist of a plurality of touch mode sub-sections, while the transducer mode section may consist of a plurality of transducer mode sub-sections. According to a still further aspect of the invention, the controller periodically switches the touch mode section and the transducer mode section such that a given point on the array of electrodes alternates between being in the touch mode section and being in the transducer mode section.

[0017] According to one aspect of the invention, the controller includes a cascoded transimpedance amplifier coupled to the array of electrodes. The cascoded transimpedance amplifier is configured to amplify the plurality of sensing signals induced by the electric field in the array of electrodes, while advantageously isolating the input capacitance of the array of electrodes from the feedback resistor of the transimpedance amplifier.

[0018] According to one aspect of the invention, the transducer includes a capacitor or a battery that is configured to function as a power supply for the transducer.

[0019] According to a further aspect of the invention, the controller is configured to determine the position of the transducer by fitting the measured attributes (e.g., amplitudes, phases, etc.) of the plurality of sensing signals to a pre-determined parameterized curve. According to one aspect of the invention, the pre-determined parameterized curve relates a plurality of positions of the transducer relative to one electrode with a plurality of attributes of sensing signals induced in that electrode by the transducer at the plurality of positions, respectively. According to one aspect of the invention, the pre-determined parameterized curve is empirically derived for use with the transducer having a particular tip shape and the array of electrodes having a particular electrode configuration pattern. According to one aspect of the invention, the pre-determined parameterized curve includes a position parameter and at least one or more of a height parameter and a tilt parameter. According to one aspect of the invention, the system further comprises an external processor, such as a processor in a host system (e.g., a PC that includes the combination touch and transducer input system), and the controller and the external processor perform the curve fitting operation, which may be computationally intensive, in distributed processing.

[0020] According to another aspect of the invention, a cordless transducer is provided, which is configured for use with an array of electrodes, wherein the cordless transducer and the array of electrodes are capacitively coupled. The cordless transducer includes a pen-shaped housing including a pen tip at its distal end, and a transducer controller arranged within the pen-shaped housing. The transducer controller controls the operation of the cordless transducer, and includes a pressure sensor for detecting the pressure applied to the pen tip. The cordless transducer also includes an antenna coupled to the transducer controller to transmit the pressure sensor data, which is detected by the pressure sensor, as digital data to the array of electrodes. The transducer controller includes a power storage device, such as a battery or a capacitor, which supplies power to drive the transducer controller, to thereby achieve the cordless transducer.

[0021] According to another aspect of the invention, a combination touch and transducer input system is provided, which includes a cordless transducer described above, and a sensor. The sensor includes an array of electrodes and a sensor controller coupled to the array of electrodes. The sensor controller is configured to operate in both a touch mode to determine a position of a proximate object by capacitively sensing the object with the array of electrodes, and in a transducer mode to determine a position of the cordless transducer by measuring attributes of a plurality of sensing signals induced

in the array of electrodes by the electric field generated by the cordless transducer. The cordless transducer transmits pressure sensor data as digital data to the sensor.

[0022] According to a further aspect of the invention, a method is provided for selectively determining a position of a proximate object and a position of a transducer. The method includes eight steps. First, a proximate object is capacitively sensed with an array of electrodes. Second, a position of the proximate object is determined based on the capacitive sensing. Third, an electric field is generated with the transducer. Fourth, digital data is transmitted from the transducer. Fifth, a plurality of sensing signals are induced based on the electric field in a corresponding plurality of electrodes in the array of electrodes. Sixth, attributes of the plurality of sensing signals are measured. Seventh, a position of the transducer is determined based on the measured attributes of the plurality of sensing signals. Eighth, the digital data is received with the array of electrodes.

DESCRIPTION OF THE DRAWINGS

[0023] The present invention may more readily be understood by reference to the accompanying drawings in which:

[0024] FIG. **1** shows a tablet computer, which includes a combination touch and transducer input system in accordance with an embodiment of the invention;

[0025] FIG. **2** is schematic representation of a sensor for use in a combination touch and transducer input system, the sensor including a controller and an array of electrodes, in accordance with an embodiment of the invention;

[0026] FIGS. **3**A and **3**B are schematic representations of a transducer for use in a combination touch and transducer input system, in accordance with an embodiment of the invention;

[0027] FIG. **4** is a block diagram of a transducer in accordance with an embodiment of the invention;

[0028] FIG. **5**A is a block diagram of a sensor, including a controller and an array of electrodes, in accordance with an embodiment of the invention;

[0029] FIG. **5**B is a schematic representation of an array of electrodes that is divided into one or more touch mode sections and one or more transducer mode sections, according to one embodiment of the invention;

[0030] FIG. **6** is a block diagram of a processing stage, which may be included in the controller of FIG. **5**A, in accordance with an embodiment of the invention;

[0031] FIG. **7** is a circuit representation of a charge amplifier, which may be included in the processing stage of FIG. **6**, in accordance with an embodiment of the invention;

[0032] FIG. **8** is a circuit representation of a voltage amplifier, which may be included in the processing stage of FIG. **6**, in accordance with an embodiment of the invention;

[0033] FIG. **9** is a circuit representation of a transimpedance amplifier, which may be included in the processing stage of FIG. **6**, in accordance with an embodiment of the invention;

[0034] FIG. **10** is a circuit representation of a cascoded transimpedance amplifier, which may be included in the processing stage of FIG. **6**, in accordance with an embodiment of the invention;

[0035] FIG. **11**A is a flow chart illustrating a process of scanning an array of electrodes during a transducer mode, according to one embodiment of the invention;

[0036] FIGS. **11**B and **11**C each illustrate an array of electrodes, in which when one elongate electrode is sensed during a transducer mode using the electric field coupling, two ore more of the elongate electrodes adjacent to the electrode being sensed are selectively terminated (e.g., floated, terminated via a resistor to ground, or grounded) according to one embodiment of the invention;

[0037] FIG. **11**D illustrates an array of electrodes suitably arranged to pick up a magnetic field component of an electromagnetic field generated by a transducer, during the transducer mode, in accordance with one embodiment of the present invention;

[0038] FIG. **12** is a schematic representation of a digital filtering procedure according to one embodiment of the invention;

[0039] FIG. **13**A is a flow chart illustrating a sample process used to determine a position of a transducer based on a curve-fitting technique, according to one embodiment of the invention;

[0040] FIG. **13**B is a sample parameterized curve that is empirically derived and used to determine the position of a transducer, according to one embodiment of the invention;

[0041] FIG. **13**C is a sample phase locked loop (PLL) circuit suitable for generating multiple frequencies for use in accordance with one embodiment of the invention;

[0042] FIG. **14** shows a sample data frame used to transmit digital data between a transducer and a sensor in a combination touch and transducer input system, according to one embodiment of the invention;

[0043] FIG. **15** is a flow chart illustrating a process performed by a transducer, including the process of encoding and transmitting digital data to a sensor, according to one embodiment of the invention; and

[0044] FIG. **16** is a flow chart illustrating a process of decoding digital data encoded in frequency shifts of a signal generated by a transducer, according to one embodiment of the invention.

DETAILED DESCRIPTION

[0045] The embodiments of the invention provide systems and methods for facilitating user input into an electronic system. A combination touch and transducer input system is provided, which facilitates user input with both ordinary objects (e.g., fingers) and transducers (e.g., styluses) that emit an electric field for position detection.

[0046] FIG. **1** shows an exemplary tablet computer **100**, suitable for incorporating a combination touch and transducer input system according to an embodiment of the present invention. The tablet computer **100** includes a display **102**, such as a LCD device, over which a generally transparent sensing surface **104** is provided. The sensing surface **104** may form part of the combination touch and transducer input system of the present invention, which is used to detect ordinary objects (e.g., finger **106**) as well as to detect one or more transducers (e.g., stylus **108**). Specifically, within or beneath the sensing surface **104** is an array of electrodes (not shown in FIG. **1**) that are configured to capacitively sense a proximate object as well as to receive an electric field generated by a transducer to thereby detect the position of the transducer.

[0047] According to various exemplary embodiments of the present invention, the combination touch and transducer input system is configured to operate in a touch sensing mode (or "touch mode" for short) and in a transducer sensing mode (or "transducer mode" for short), either simultaneously or in an alternating manner by switching between the two modes in successive sampling periods. In the touch mode, the system is configured to determine a position of a proximate object by

capacitively sensing the object with the array of electrodes. In the transducer mode, the system is configured to determine a position of a transducer by measuring attributes (e.g., amplitudes, phases, etc.) of a plurality of sensing signals that are induced in the array of electrodes by an electric field generated by the transducer. The same array of electrodes is used for both touch sensing and transducer sensing. A user can thus interface with the tablet computer **100** with either an ordinary object (such as a finger **106**) or with the transducer (such as a stylus **108**). During operation, a user can thus use the finger **106** and/or the stylus **108** and the sensing surface **104** to perform a variety of user interface functions, such as activating icons, moving a cursor, and entering text and other data.

[0048] While the illustrated embodiment shows a tablet computer **100**, the embodiments of the invention can be applied in any type of devices that utilize an input device. Examples include other computing devices, media devices, and communication devices. Furthermore, while the illustrated embodiment shows a finger **106**, any other capacitive object (having a size sufficient to form a mutual capacitance with at least one electrode) can be used for interfacing with the sensor operating in the touch mode. Finally, while the illustrated embodiment shows a stylus **108**, any other suitable transducer can be used, including other pen-like devices, pointers, cursors, pucks, mice, pawns, and other implements.

[0049] A combination touch and transducer input system generally consists of a transducer (e.g., the stylus **108** in FIG. **1**) and a sensor **150**, which is shown in FIG. **2**. The sensor **150** includes a sensor controller **152** and an array of electrodes **154**. In the illustrated embodiment, the array of electrodes **154** includes a first set of generally elongate electrodes **154***a* extending in a first (e.g., horizontal) direction, and a second set of generally elongate electrodes **154***b* extending in a second (e.g., vertical) direction that is different from (e.g., perpendicular to) the first direction. A sheet or other geometrical arrangement of dielectric material (e.g., glass, not shown) is interposed between the first and second sets of elongate electrodes **154***a* and **154***b*. Also, another sheet of material such as glass (not shown in FIG. **2**) overlays the array of electrodes **154** to insulate and physically protect the array of electrodes **154**, to collectively function as the sensing surface **104** of FIG. **1**.

[0050] Typically, the array of electrodes **154** is formed by depositing transparent conductive material on one or more sheets. For example, a conductor such as indium tin oxide (ITO) may be patterned on one side or both sides of a glass sheet to form the first and second sets of elongate electrodes **154***a* and **154***b*, respectively, over which another glass sheet may be applied to form the sensing surface **104**. A variety of different electrode shapes (e.g., diamond-shaped electrodes and square-shaped electrodes) as well as array patterns may be used, and the array of electrodes **154** for use in the present invention is not limited to the specific configuration illustrated in FIG. **2**. For example, while FIG. **2** shows the array of electrodes **154** formed with two layers of overlapping rectangular electrodes, other configurations are available in which the first and second sets of electrodes (e.g., diamond-shaped electrodes) do not substantially overlap with each other and thus may be provided generally on a single layer. In various other embodiments, the first and second sets of electrodes do not extend substantially perpendicularly to each other but rather merely extend in two different directions. In further embodiments, the electrodes in each set need not be substantially in parallel with each other. Still further, the array pattern may include not only the first and second sets of electrodes, but also the third, fourth, and additional sets of electrodes that are suitably arranged.

[0051] The controller **152** of the sensor **150** is configured to perform signal processing for position determination in the combination touch and transducer input system. As will be more fully described below in reference to FIG. **5**A, the sensor controller **152** suitably comprises any type of processing device, including single integrated circuits such as a microprocessor. Additionally, the sensor controller **152** may include multiple separate devices, including any suitable number of integrated circuit devices and/or circuit boards working in cooperation. For example, the sensor controller **152** may include devices such as microcontrollers, processors, multiplexers, filters, amplifiers and interfaces. Finally, in some applications the sensor controller **152** is configured to execute programs contained within a memory.

[0052] When operating in the touch mode, the sensor controller **152** is configured to determine positions of one or more proximate object(s) by capacitively sensing each object with the array of electrodes **154**. Various techniques for capacitive touch detection are known in the art, including multi-touch detection techniques capable of detecting multiple touches at a time. For example, as the sensor controller **152** sequentially drives a signal to each of the first set of elongate electrodes **154***a* in the array of electrodes **154** as shown in FIG. **2**, each intersection of the first set of elongate electrodes **154***a* and the second set of elongate electrodes **154***b* forms a capacitor. More generally, each pair of at least one of the first set of elongate electrodes **154***a* and at least one of the second set of elongate electrodes **154***b*, which may or may not overlap with the at least one of the first set of elongate electrodes **154***a*, forms a capacitor. When an object, such as a finger, is placed on or proximate to one of these capacitors, a portion of the electric field lines extending from that capacitor is drawn toward the finger, to thereby cause a decreasing change in capacitance of the capacitor. Such change in capacitance is reflected in a signal outputted from one of the second set of elongate electrodes **154***b* that is forming the capacitor. Thus, the controller **152** can determine the position of the proximate object based on which one of the first set of elongate electrodes **154***a* is receiving a driving signal (e.g., Y coordinate) and which one of the second set of elongate electrodes **154***b* is outputting a signal indicative of a capacitance change (e.g., X coordinate). Again, this is one example of a capacitive touch sensing technique, and various other techniques for capacitive touch detection may be used in the touch mode operation of the present invention.

[0053] FIG. **3**A is a simplified block diagram of a transducer **175** for use in a combination touch and transducer input system according to an embodiment of the present invention. The transducer **175** includes a transducer controller **177** and an antenna **179**. FIG. **3**B is a partially cross-sectional view of a transducer **175** embodied as a stylus according to one embodiment of the present invention. The stylus transducer **175** includes a generally cylindrical elongate body **330**, which houses the transducer controller **177** (see FIG. **4**), and an antenna **179** embodied as a pen tip of the stylus transducer **175**. The transducer shown in FIG. **3**B is suitable for use in electrically (or capacitively) coupling the antenna **179** and the array of electrodes **154**, using the electric field generated by the transducer **175**. The following description is generally related to these embodiments in which a transducer and a sensor are electrically (or capacitively) coupled. In other

embodiments of the present invention, however, a transducer and a sensor may be magnetically coupled, using the magnetic field component of an electromagnetic field generated by the transducer, as will be described later in reference to FIG. **11**D.

[0054] The transducer controller **177** controls the operation of the transducer **175** and, as will be more fully described below in reference to FIG. **4**, may suitably comprise any type of processing device, including single integrated circuits such as a microprocessor. Additionally, the transducer controller **177** may include multiple separate devices, including any suitable number of integrated circuit devices and/or circuit boards working in cooperation. For example, the transducer controller **177** may include devices such as pressure sensors, switches, capacitors, regulators, microcontrollers and processors.

[0055] The transducer controller **177** regulates the emitting of an electric field from the antenna **179**. When the transducer **175** is proximate the array of electrodes **154**, the electric field emitted by the antenna **179** will induce sensing signals in one or more electrodes. Specifically, by applying a voltage V to the transducer antenna **179**, an amount of charge Q is stored on the transducer antenna **179** that effectively forms a top plate of a capacitor, and an electric field is established between the transducer antenna **179** and one or more of the array of electrodes **154** that effectively form a bottom plate of the capacitor. This electric field induces an opposing charge on the one or more of the array of electrodes **154**, wherein the amount of charge induced is proportional to the capacitance between the transducer antenna **179** and the one or more electrodes. The induced charge is independent of the frequency at which the voltage V is applied, and is generally expressed as below:

$$Q=CV \qquad \text{Equation (1)}$$

where C is the capacitance between the transducer antenna **179** and the one or more electrodes on which the charge is induced. By varying the voltage applied to the transducer antenna **179**, a current can be induced on the array of electrodes **154**. Specifically, varying the applied voltage will change the stored charge and the electric field, thereby changing the induced charge on the array of electrodes **154**. Changes in the induced charge result in a current flow (I) in the array of electrodes **154**, which is proportional to the applied driving frequency as well as the voltage V and the capacitance C.

$$I = C\frac{dV}{dt} \qquad \text{Equation (2)}$$

According to various exemplary embodiments of the present invention, the current flow, or more particularly, attributes (e.g., amplitudes, phases, etc.) of the currents (sensing signals) induced in the array of electrodes **154** are measured and used to determine the position of the transducer **175**. In other words, when operating in the transducer mode, the sensor controller **152** is configured to determine a position of the transducer **175** based on the attributes of a plurality of sensing signals that are induced in the array of electrodes **154**.

[0056] FIG. **4** is a block diagram of the transducer **175** according to one embodiment of the invention. The transducer **175** includes a transducer controller **177** and an antenna **179**. The transducer controller **177** controls the operation of the transducer **175** and may suitably comprise any type of processing device. In the illustrated embodiment, the transducer controller **177** includes a pressure sensor **306**, a power arbitrator **308**, a side switch **310**, a capacitor **314** (e.g., a super capacitor), a charge input connecter **315**, a regulator **316**, and a microcontroller unit (MCU) **318**. The power arbitrator **308** and the MCU **318** are coupled via a general purpose input/output (GPIO) **312**, and the MCU **318** and the antenna **179** are coupled via another GPIO.

[0057] Referring additionally to FIG. **3**B, some or all of these components of the transducer controller **177** and their required interfaces may be mounted on an appropriately sized circuit board **329**, which is then housed within an appropriate transducer body **330**. In the stylus implementation shown in FIG. **3**B, all components except for the capacitor **314** are mounted on the board **329** inside the pen-shaped body **330**. In the embodiment shown in FIG. **3**B, the pressure sensor **306** is provided near the tip of the stylus so as to detect a pressure applied to the tip formed by the antenna **179** when the tip is applied against the sensing surface. In other embodiments, though, the pressure sensor **306** may be placed further away from the tip via a mechanism or linkage that transmits the pressure information from the tip to the location of the pressure sensor **306**. The side switch **310** is provided to be exposed on the side of the pen-shaped body **330**. The capacitor **314**, such as a super capacitor, is provided in the rear portion of the pen-shaped body **330**, with the charge input connector **315** being exposed on the rear end of the pen-shaped body **330** to be connected to a charging docking station (not shown). The antenna **179**, which functions as a pen tip for the stylus transducer **175** of FIG. **3**B, may be configured of any suitable conductive material and may be formed in any suitable shape. In one embodiment, the stylus illustrated in FIG. **3**B has a length of 120 mm and a diameter of 11 mm, although the dimensions of the stylus transducer are not so limited according to the present invention.

[0058] In the illustrated embodiment, the capacitor **314** is provided to function as a power source for the transducer **175**. Any capacitor, such as a super capacitor having a high energy density, to provide enough power to operate the transducer **175** for a sufficient length of time may be used. For example, a 0.2 F capacitor with a rated voltage of 3.3V will be able to provide sufficient power in most applications. As seen in FIG. **3**B, the diameter of the capacitor **314** may define the diameter of the stylus-type transducer **175** and, therefore, by reducing the diameter of the capacitor **314**, the diameter of the transducer **175** may be made smaller to be in the range of 3-7 mm.

[0059] The capacitor **314** can be charged from a variety of sources. For example, as illustrated, it may be charged via the charge input connector **315** when the transducer **175** is placed in a docking station or other storage area of an associated device (not shown). When the transducer **175** is placed in the docking station, power is transmitted through an ohmic contact or from an antenna of the docking station to the transducer **175** and more specifically to the capacitor **314**. In another embodiment, the capacitor **314** may be charged by receiving an electromagnetic signal from the array of electrodes **154** or from powering antennas provided separately from the array of electrodes for this purpose. The powering antenna may be located on or near the array of electrodes **154**. To receive such an electromagnetic signal, the transducer **175** may use the antenna **179** or a separate antenna that is provided specifically for this purpose. In these embodiments, the transducer **175** can be recharged during use, and therefore a

smaller capacitor **314** may be used. It should be noted that the capacitor **314** is one example of a power source suitable for use with the transducer **175**, and other types of power sources may likewise be used, such as a battery and a corded power supply.

[0060] The pressure sensor **306** is used to detect pressure applied to the transducer **175** and, more specifically, to the tip of the transducer in case of a stylus-form transducer. The detected pressure is then used to control various operations of the transducer **175** and the combination touch and transducer input system. In the illustrated embodiment, the pressure sensor **306** is mounted at the tip of a pen-like transducer such that the pressure sensor **306** can measure the pressure at which the tip is applied to the sensing surface **104**. As one example, the detected pressure is used to "awaken" the transducer **175** from a default sleep mode. By providing a sleep mode, and awaking the transducer **175** only when tip pressure is detected, the operating time of the transducer **175** can be reduced to thereby conserve power. As another example, the pressure sensor **306** can be used to force the combination touch and transducer input system to remain operating in the transducer mode as long as a pressure value above a certain threshold is detected, instead of switching to operating in the touch mode. As a further example, the pressure sensor **306** can be used to indicate the width or darkness of a user's stroke, such as a smaller pressure indicating a thin or light stroke, or a larger pressure indicating a wide or dark stroke desired by the user. A variety of different types of circuits can be used to implement the pressure sensor **306**. As one example, a variable resistor that changes resistance as pressure is applied can be used. The change in resistance is measured and digitized by an appropriate analog-to-digital converter (ADC), and then transmitted to the MCU **318** for processing to determine the detected pressure level.

[0061] The side switch **310** is a switch that allows a user to control operation of the transducer **175**, similar to the right- and left-clicking of a mouse, for example. The state of the side switch **310** is passed to the MCU **318** and used in controlling the operation of the transducer **175**. For example, it can be used to put the transducer **175** into different operating modes, such as in different colors or in different types of stroke. As with the pressure information obtained by the pressure sensor **306**, the switch information received from the side switch **310**, as well as the transducer ID information, may be then encoded as digital data by the MCU **318**, for transmission from the antenna **179** to the array of electrodes **154**, as will be more fully described below.

[0062] The regulator **316** provides power regulation for the transducer **175**, and in particular provides a regulated power supply for the MCU **318**. Especially in cordless transducer applications powered by the capacitor **314** or a battery, it is desirable to minimize power consumption. Thus, the power regulator **316** preferably provides a sleep or shut-down mode with low current draw, in addition to an awake mode with regular current draw. In this connection, the power arbitrator **308** monitors a pressure signal received from the pressure sensor **306** and, when the detected pressure level exceeds a certain threshold value as determined by the MCU **318**, may enable the regulator **316** to switch from the sleep mode to the awake mode to awaken the transducer **175**. Substantial power saving is possible with awaking the transducer **175** only when sufficient tip pressure is detected. A variety of different types of power regulators can be used, including various programmable devices with controllable output levels. The operation of the transducer **175** to switch between the sleep mode and the awake mode will be described below in reference to FIG. **15**.

[0063] According to some exemplary embodiments of the present invention, the microcontroller unit (MCU) **318** carries out the overall processing for the transducer **175** and performs generally three functions: controlling the regulator **316** via the power arbitrator **308**, providing a driving signal for the antenna **179**, and hopping the driving signal frequency to provide noise immunity and/or to encode digital data in the driving signal. In accordance with various exemplary embodiments of the invention, the MCU **318** is a programmable device that includes an onboard digitally controlled oscillator. The digitally controlled oscillator provides a driving signal for the antenna **179**. The oscillator can be controlled to provide a range of different frequencies to achieve frequency hopping and to encode digital data (e.g., pressure data, switch status data, and pen ID data) in frequency shifts of the driving signal for the antenna **179**. In further embodiments, the MCU **318** is configured to encode digital data in amplitude shifts or phase shifts of the driving signal for the antenna **179**. The MCU **318** controls the timing, durations, frequencies, amplitudes, and phases of driving signals for the antenna **179**. Therefore, the electric field generated by the antenna **179** is used by the sensor **150** not only to determine a position of the transducer **175**, but also to receive and decode the digital data encoded therein by the transducer **175**. The MCU **318** preferably provides a low power mode which reduces operating current. The lower power mode can be used between transmission times to reduce overall power consumption. One example of a microcontroller unit with low power consumption suitable for use as the MCU **318** is a MSP **430** microcontroller available from Texas Instruments.

[0064] FIG. **5**A is a block diagram of the sensor **150** including the array of electrodes **154** and the controller **152** (see FIG. **2**). The controller **152** functions to perform signal processing for position determination of an object (e.g., a finger) and the transducer **175**, as well as for decoding digital data encoded in the electric field generated by the transducer **175**. In the illustrated embodiment, the controller **152** includes an analog multiplexer (Mux) **410**, another analog multiplexer **412**, a processing stage **414**, an analog-to-digital converter (ADC) **416**, and a microprocessor unit (MPU) **420**, which generally form the transducer's position and digital data sensing portion of the controller **152**. The controller **152** also includes a filter and analog-to-digital converter (ADC) **418** which together with the multiplexer **410** and the MPU **420** form the capacitive touch sensing portion of the controller **152**. One example of a microprocessor unit suitable for use as the MPU **420** is a programmable system-on-chip (PSOC) microprocessor available from Cypress. It should be noted that the configuration of the controller **152** as illustrated in FIG. **5**A is merely one example, and other configurations of the controller **152** are possible as should be apparent to one skilled in the art. For example, the capacitive touch sensing portion and the transducer's position and digital data sensing portion can be partially or fully combined and integrated together. In the illustrated embodiment, the MPU **420** is shared by both the capacitive sensing portion and the transducer's position and digital data sensing portion.

[0065] The multiplexer **410** selectively couples the array of electrodes **154** to the capacitive touch sensing portion and/or to the transducer's position and digital data sensing portion of the controller **152** depending on the operational mode of the

system. The multiplexer **410** can be implemented with suitable analog multiplexers. These multiplexers are preferably selected to have relatively low charge injection so as not to significantly disturb the capacitance of the array of electrodes **154**. The multiplexer **410** is coupled to the analog multiplexer **412** in the transducer's position and digital data sensing portion, and to the filter and ADC **418** in the capacitive sensing portion.

[0066] In the capacitive sensing portion, the filter and ADC **418** is configured to suitably amplify, filter, and digitize the received signals, which the MPU **420** processes to measure any capacitance change caused by object(s) to thereby determine the position of the object(s). To this end, for example, the MPU **420** may drive an electric signal to each of the first set of elongate electrodes **154***a*, which forms a capacitor with each of the second set of elongate electrodes **154***b*, and any change in capacitance at each capacitor is monitored and measured through the corresponding one of the second set of electrodes **154***b*. The MPU **420** performs the processing necessary to determine the position of the object(s) based on the measured capacitance change. It should be noted that a wide variety of different techniques could be used to facilitate capacitive sensing, and the embodiments of the invention can be implemented with any suitable capacitive sensing technique. According to one aspect of the present invention, a combination touch and transducer input system may be advantageously constructed from any suitable capacitive touch sensor, to which the transducer's position and digital data sensing function can be added.

[0067] The analog multiplexer **412** in the transducer's position and digital data sensing portion serves to connect individual electrodes in the array of electrodes **154** to the processing stage **414** during the transducer mode. When the electrodes are not coupled to the processing stage **414**, they are selectively terminated (e.g., grounded, terminated through a resistor to ground, or floated), as will be more fully described below in reference to FIGS. **11**B and **11**C.

[0068] The processing stage **414** functions to amplify and filter the sensing signals received from the array of electrodes **154**. The processing stage **414** can thus include a variety of amplifiers and filters. An example of the processing stage **414** will be described in detail below in reference to FIG. **6**. The amplified and filtered signals in analog form are then received by the ADC **416** and outputted therefrom in digital form to the MPU **420**.

[0069] Turning to FIG. **6**, one specific embodiment of a processing stage **414** is illustrated. In this embodiment, the processing stage **414** includes an amplifier **502**, an automatic gain control (AGC) **504**, a notch filter **506**, a bandpass filter **508** (e.g., a wideband bandpass filter), and an anti-aliasing filter **510**.

[0070] The amplifier **502** amplifies the signal received from the selected electrode. Various types of amplifiers may be used, including a charge amplifier, a voltage amplifier, a transimpedance amplifier, and a cascoded transimpedance amplifier.

[0071] FIG. **7** illustrates an exemplary charge amplifier **600**, which may be used as the amplifier **502** of FIG. **6**. The charge amplifier **600** includes an operational amplifier (or "op amp") **602** set up with negative feedback through a capacitor **606**. The inverting input of the op amp **602** is connected to the electrode line. The charge amplifier **600** generates a voltage proportional to the charge induced on the electrode, and this voltage is given by:

$$V = \frac{Q}{C} \qquad \text{Equation (3)}$$

where V is the outputted voltage, Q is the charge induced on the electrode, and C is the feedback capacitance **606**. Since any operational amplifier suffers from input and offset bias currents at its inverting and non-inverting terminals, the charge amplifier of FIG. **7** should include a DC path for these currents to flow. For example, a resistor **607** can be included in parallel with the feedback capacitor **606**, to thereby create a DC path that allows the inverting terminal's bias currents to flow without compromising the characteristics of the charge amplifier as set by the feedback capacitor **606**. This design differs from the transimpedance amplifier in the cascoded transimpedance amplifier of FIG. **10**, to be described below, wherein the feedback resistor **904** is sized in relation to the feedback capacitor **906** so that the impedance of the resistor **904** dominates in the feedback loop over the impedance of the capacitor **906**. The appropriate values of the feedback resistors and capacitors as used in FIGS. **7** and **10** will be readily determinable by those skilled in the art.

[0072] FIG. **8** illustrates an exemplary voltage amplifier **700**, which may be used as the amplifier **502** of FIG. **6**. The voltage amplifier **700** includes an op amp **702** and resistors **704** and **706**. The electrode line is connected to the resistor **706**.

[0073] FIG. **9** illustrates an exemplary transimpedance amplifier **800**, which may be used as the amplifier **502** of FIG. **6**. The transimpedance amplifier **800** includes an op amp **802** and a resistor **804**. The inverting input of the op amp **802** is connected to the electrode line. A current flowing through the feedback resistor **804** surrounding the op amp **802** is converted to a voltage.

[0074] FIG. **10** illustrates an exemplary cascoded transimpedance amplifier **900**, which may be used as the amplifier **502** of FIG. **6**. The cascoded transimpedance amplifier **900** includes an op amp **902**, a resistor **904**, a capacitor **906**, two constant current sources **908**, **909**, and a transistor, such as an NPN transistor **910**. The cascoded transimpedance amplifier **900** works similarly to the transimpedance amplifier **800** of FIG. **9**, in that any current flowing through the feedback resistor **904** surrounding the op amp **902** will be converted to a voltage, as follows:

$$V=IR \qquad \text{Equation (4)}$$

where V is the outputted voltage, I is the current flowing through the feedback resistor **904**, and R is the resistance of the feedback resistor **904**. The cascoded transimpedance amplifier **900** is advantageous in that it isolates the input capacitance of the electrode line from the feedback resistor **904** of the transimpedance amplifier **900** with the NPN transistor **910**, allowing higher transimpedance gains to be realized without sacrificing bandwidth or signal to noise ratio. It also has improved stability by incorporating the feedback capacitor **906** in parallel with the feedback resistor **904** to control the noise gain at higher frequencies.

[0075] This combination of the transistor **910** in front of a transimpedance amplifier is known as a cascoded transimpedance amplifier. The NPN transistor **910** is configured as a common-base current buffer and, as such, allows a current flowing into its emitter (E) to flow through the transistor **910** and out to its collector (C). The current is then picked up by

the transimpedance amplifier and converted to a voltage signal. The NPN transistor emitter (E) has an equivalent small signal resistance that is given by:

$$r = \frac{kT}{qIc} \quad \text{Equation (5)}$$

where k is Boltzman's constant, T is temperature, q is the elementary unit of charge, and k is the bias current flowing through the NPN transistor. The resistance r is seen by the electrode capacitance and creates a RC constant that can limit the bandwidth of the transimpedance amplifier. Thus, two equal constant current sources **908**, **909** are included in this design to establish an appropriate bias current so that the emitter resistance r is set small enough to allow the signal picked up by the electrode to pass through to the transimpedance amplifier. In another embodiment, one constant current source may be used to achieve the same effect, although with only one current source the bias current may have no other way but to flow through the transimpedance amplifier. This will cause a large DC offset to be detected which, with sufficient gain, will saturate the transimpedance amplifier and wipe out the desired signal. Using two matched constant current sources **908**, **909**, as illustrated, ensures that the bias current injected into the NPN transistors **900** is also picked up and drawn away from the transimpedance amplifier.

[0076] Returning to FIG. **6**, the amplified signal from the amplifier **502** is passed to the automatic gain control (AGC) **504**. Using feedback from the MPU **420**, the AGC **504** automatically scales the output of the amplifier **502**. The AGC **504** is adjusted so that the dynamic range of the signal eventually fed into the ADC **416** closely matches its full scale reference. This can reduce digitization noise that could otherwise result when weaker signals are received by the array of electrodes **154**.

[0077] The output of the AGC **504** is passed to the notch filter **506**. The notch filter **506** is provided to remove noise spikes, such as those caused by powerline noise that is picked up by the array of electrodes **154**. Suitably, a 50/60 Hz notch filter can be used to remove typical power line noise.

[0078] The output of the notch filter **506** is passed to the bandpass filter **508**, such as a wideband bandpass filter. The bandpass filter **508** is provided to pass only the selected range of predefined frequencies while blocking or removing other frequencies.

[0079] The output of the bandpass filter **508** is passed to the anti-aliasing filter **510**. The anti-aliasing filter **510** is a filter to reduce noise above a certain frequency to match the output signal to the ADC **416**, to ensure that the ADC sampling is not aliased or distorted. The anti-aliasing filter **510** is typically implemented with a filter having a very sharp cut-off frequency.

[0080] The processing stage **414**, as illustrated in FIG. **6**, thus amplifies and filters the signals induced in and received from the array of electrodes **154**. Returning to FIG. **5**A, the output of the processing stage **414** is passed to the analog to digital converter (ADC) **416**. The ADC **416** digitizes the analog output of the processing stage **414**. In one embodiment, the ADC **416** has a sample rate of 1 million samples per second. This provides a sufficient sampling rate to avoid aliasing when the transducer **175** transmits at frequencies up to 250 kHz.

[0081] The digitized output of the ADC **416** is passed to the MPU **420**. The MPU **420** performs the processing for determining the position of the transducer **175** based on the received signals, as well as for decoding digital data (e.g., pressure data, switch status data, and pen ID data) encoded in the received signals. Exemplary processes used to encode digital data in the transducer signal, and to scan and decode the transducer signal both to determine a position of the transducer and to decode the digital data, will be described later in reference to FIGS. **11**A-**16**.

[0082] In various other embodiments of the present invention, the transducer **175** may transmit digital data (e.g., pressure data, switch status data, and pen ID data) to the sensor **150** using other RF techniques such as via a Bluetooth® device pursuant to IEEE 802.15 standards including Bluetooth and ZigBee protocols.

[0083] As described above, the combination touch and transducer input system may be configured to operate in a touch sensing mode and in a transducer sensing mode in an alternating manner by switching between the two modes in successive sampling periods. To this end, the controller **152** and, more specifically the MPU **420**, is configured to control the multiplexer **410** so as to perform the touch sensing and transducer sensing in an alternating manner. In another embodiment, the operating mode may be selected by a user of the system. For example, the sensor **150** may include a switch, which the user may operate to select one of the two modes. As another embodiment, the system operating in the transducer mode may remain operating in the transducer mode as long as it is receiving digital data from the transducer **175** indicating that a pen pressure above a certain threshold value has been detected. As discussed above, the pressure sensor **306** may be used to sense the stylus-type transducer's tip pressure to thereby awaken the transducer only upon detecting a pen pressure exceeding a threshold value. At that time, either the pressure value, or the awake mode, may be sent from the transducer **175** to the sensor **150**. For example, the digital data may be encoded in the electric field generated by the transducer **175** and transmitted to the sensor **150**. Upon receiving (and decoding, if necessary) the digital data indicative of a pen pressure above a threshold value, during the transducer mode, the controller **152** may reset its timer to automatically remain operating in the transducer mode for a predetermined amount of time, without switching to the touch mode.

[0084] Referring now to FIG. **5**B, in some embodiments of the invention, the array of electrodes **154** is divided into a touch mode section, denoted by ①, and a transducer mode section, denoted by ②. The controller **152** is configured to simultaneously operate in the touch mode in the touch mode section ① and in the transducer mode in the transducer mode section ②. To this end, the array of electrodes **154** needs to be suitably reconfigured, as well as its connection with the multiplexer **410**. In the illustrated embodiment, the array of electrodes **154** is divided into four quadrants, two quadrants **422** forming the touch mode section ① and the other two quadrants **424** forming the transducer mode section ②, at Time **1**. The controller **152** may be further configured to selectively switch the touch mode section ① and the transducer mode section ② so that a given point on the array of electrodes **154** alternates between being in the touch mode section and being in the transducer mode section. For example, in FIG. **5**B, at Time **2**, the touch mode section and the transducer mode section are switched, such that the two quadrants **422** that previously formed the touch mode section now form the

transducer mode section ②, while the other quadrants **424** that previously formed the transducer mode section now form the touch mode section ①. By alternating between the state of Time **1** and the state of Time **2**, the controller **152** can simultaneously operate both in the touch mode and in the transducer mode, and further, any point on the array of electrodes **154** alternates between being in the touch mode section and being in the transducer mode section. While in the illustrated embodiment the touch and transducer mode section each consists of two quadrants, each mode section may instead consist of one section or of three or more sub-sections. Also, the shape of each section and sub-section, as well as the pattern in which multiple sections and sub-sections are combined, are not limited to what is illustrated in FIG. **5**B. For example, each section or sub-section may have an elongate shape and be arranged generally in parallel with each other to form stripes.

[0085] FIG. **11**A is a flow chart illustrating one example of a process performed by the sensor controller **152** to scan the signals from the array of electrodes **154** during the transducer mode. In step **1001**, the multiplexers **410**, **412** are set to receive a signal from the first horizontal ITO line, e.g., the first Y electrode. In step **1003**, the selected horizontal ITO line is scanned. In step **1005**, it is determined whether there are more horizontal ITO lines to be scanned. If yes, in step **1006** the next horizontal ITO line is selected, and returning to step **1003**, the selected next horizontal ITO line is scanned. If in step **1005** it is determined that no more horizontal ITO lines exist, in step **1007**, the multiplexers **410**, **412** are set to receive a signal from the first vertical ITO line, e.g., the first X electrode. In step **1009**, the selected vertical ITO line is scanned. In step **1011**, it is determined whether there are more vertical ITO lines to be scanned. If yes, in step **1013** the next vertical ITO line is selected, and returning to step **1009**, the selected next vertical ITO line is scanned. If in step **1011** it is determined that no more vertical ITO lines exist, i.e., if it is determined that the entire array of electrodes **154** has been scanned, proceeding to step **1015**, feedback from the scanned data is used to adjust the gain of the AGC **504** in the processing stage **414** of the controller **152**. In accordance with various exemplary embodiments of the present invention, the process of FIG. **11**A runs concurrently with other software run by the MPU **420**. This ensures that there is a constant stream of signal samples coming in from the array of electrodes **154**.

[0086] Referring to FIGS. **11**B and **11**C, during the electrode scanning as described above in reference to FIG. **11**A, it has been discovered that selectively terminating the electrodes adjacent to the electrode being sensed improves the capacitive response of the sensed electrode to thereby produce a stable signal with improved signal-to-noise ratio. Specifically, FIG. **11**B shows one of the second set of elongate electrodes **426** being sensed, while the adjacent electrodes in the second set of elongate electrodes **154***b* are all terminated via a resistor R to ground. The first set of elongate electrodes **154***a* are all grounded. As used herein, "selectively terminated" means any of the selected states including being grounded (zero or low impedance), being floated (i.e., not significantly constrained in its voltage relationship to ground, with high or infinite impedance), and being terminated via an impedance to ground, i.e., via a resistor or another electronic device (having a selected value of impedance) to ground.

[0087] In the example of FIG. **11**B, all of the adjacent electrodes in the second set of elongate electrodes **154***b* are terminated via a resistor "R," although in other embodiments only two or more of the adjacent electrodes may be terminated via a resistor (or floated, or grounded). For example, FIG. **11**C shows another exemplary embodiment according to the present invention, in which one of the second set of elongate electrodes **426** is sensed, while two adjacent electrodes **427** on either side of the electrode **426** (total four adjacent electrodes **427**) are floated. The remaining electrodes are grounded. In this embodiment, these adjacent electrodes **427** are not coupled to ground even via another device such as a resistor. As another example, three or four adjacent electrodes on either side of the electrode **426** may be floated, or terminated via a resistor, with the rest of the electrodes being grounded. Contrary to conventional wisdom that not grounding all of the adjacent electrodes will trigger cross-coupling among adjacent electrodes, in some applications, floating or terminating via a resistor the adjacent electrodes surprisingly improves capacitive coupling between the transducer **175** and the electrode being sensed **426**.

[0088] In other applications, on the other hand, grounding all of the adjacent electrodes will reduce capacitive coupling among adjacent electrodes to thereby improve the capacitive response of the electrode being sensed. This may be true, for example, when high-frequency signals are used or when the electrodes are very thin and have a width on the order of 1 mm and are finely spaced. A suitable manner of selective termination (e.g., how many of the adjacent electrodes should be floated, terminated via a resister, or grounded) can be derived for a particular electrode configuration pattern based on a simulation method. As a specific example, it has been found that changing the impedance through which each electrode is terminated, from zero (grounded) to a certain impedance value (through a resistor) to infinity (floated), in turn controls the width of a signal response as illustrated in FIG. **13**B below. Controlling and optimizing this width will be advantageous in performing a curve fitting procedure, also described below, to determine the transducer's position.

[0089] While the description above generally relates to various embodiments of the present invention in which the transducer **175** and the sensor **150** are electrically (capacitively) coupled based on the electric field generated by the transducer **175**, in other embodiments they can be magnetically coupled based on the magnetic field component of an electromagnetic field generated by the transducer **175**. FIG. **11**D illustrates a sample configuration of a sensor **150'** suitable for use in a magnetic coupling embodiment. In FIG. **11**D, the second set of (vertical) electrodes **154***b* have one side of each shorted together through a trace "T_1" while the other side of each is connected to switches S_1-S_{14}, so that any of the second set of electrodes **154***b* may be connected to ground or to a sense line L connected to the controller **152** (not shown). In the illustrated example, only one electrode **154***b*' is connected to the sense line L at a time, though in other examples two or more of the second set of electrodes **154***b* or of the first set of electrodes **154***a* may be simultaneously connected to the sense line L. While FIG. **11**D shows switches S_1-S_{14} for the second set of electrodes **154***b* only, it should be understood that a similar set of switches are also connected to the first set of electrodes **154***a*.

[0090] As illustrated, with switches S_3 and S_8 closed, a loop is formed that is enclosed by the second and the fourth (from the left) electrodes **154***b*" and **154***b*', the section of the trace "T_1" connecting these two electrodes, the sense line L (to the controller **152**), and a return path P (from the controller **152**)

through ground that the signal must take to arrive back at the grounded electrode **154***b*". Any magnetic flux that flows through the area enclosed by this loop will produce an electromotive force, which can be interpreted as a current source or a voltage source connected in series with the loop. By connecting the loop to a voltage amplifier (such as the one shown in FIG. **8**) or a transimpedance amplifier (such as those shown in FIGS. **9** and **10**), a signal induced in the loop by a magnetic transducer can be detected. Based on the detection of such signals across a number of loops, respectively, the position of the magnetic transducer can be calculated and determined. The magnetic transducer is configured similarly to the transducer shown in FIG. **3**B, except that it will have a loop (or coil) antenna capable of producing a stronger magnetic field as compared to the generally pin-shaped antenna **179** of FIG. **3**B.

[0091] It should be noted that, while in FIGS. **11**B, **11**C and **11**D, the first set of electrodes **154***a* are denoted as "ITO Bottom" and the second set of electrodes **154***b* are denoted as "ITO Top," the top and bottom orientation of the electrodes is not so limited according to the present invention.

[0092] As described above in reference to FIGS. **5**A and **6**, the signals sequentially selected by the multiplexers **410**, **412** are then amplified by the amplifier **502**, scaled by the AGC **504**, filtered by the notch filter **506**, the bandpass filter **508**, and the anti-aliasing filter **510**, and then converted into digital values by the ADC **416**. Thereafter, according to various exemplary embodiments of the present invention, the MPU **420** is configured to perform filtering of the digital values received from the ADC **416**. Alternatively, digital filtering may be implemented by a processor which is not part of MPU **420**. Specifically, while the notch filter **506**, the bandpass filter **508**, and the anti-aliasing filter **510** substantially remove the noise, there may remain further noise that could be removed. Thus, the sensor controller **152** preferably uses a digital filtering technique, in the MPU **420** or in a separate processor, to remove this remaining noise from the digital values outputted from the ADC **416**. Any suitable IIR (infinite impulse response) or FIR (finite impulse response) filters may be used.

[0093] Turning now to FIG. **12**, an exemplary procedure for digital filtering is illustrated. The digital filtering procedure is preferably implemented as software run by the MPU **420**, though it may be implemented in another processor. In the illustrated embodiment, the digital filtering procedure includes three channels of filtering. Each channel corresponds to one of multiple frequencies at which the electric field can be generated by the transducer **175**. In the illustrated embodiment, the transducer **175** is configured to selectively transmit at any of three frequencies, and thus the digital filtering procedure includes three corresponding channels, though in other embodiments more frequency channels may be included. Each filtering channel includes a band pass filter having a different pass frequency (F_1, F_2, F_3,), a rectification stage, and a low pass filter. In general, the filter frequencies are selected to filter out noise from known nearby noise sources, such as the noise from a nearby LCD screen. The output of the three band pass filters is each rectified and passed to a corresponding low pass filter. The rectification and low pass filtering of the digital values filters out the remaining noise and extracts relevant attribute (e.g., amplitude, phase, etc.) information from the inputted digital values. The output of the digital filtering therefore provides an accurate basis for determining the position of the transducer **175** and for decoding digital data encoded in the signal received from the transducer **175**.

[0094] In accordance with one aspect of the invention, two or more frequency channels are used for better noise rejection. For example, some LCD screens radiate sharp peaks at certain frequencies. If one of these frequencies is the same as the frequency used by the transducer **175**, other frequencies also available to the transducer **175** can be used instead. Thus, in accordance with one embodiment of the present invention, the controller **152** of the sensor **150** is further configured to determine a signal-to-noise ratio for each of multiple frequency channels and selects the frequency channel(s) having the highest signal-to-noise ratio as the receiving channel(s), perhaps as part of the calibration process at design time. It is also possible for the controller **152** to then send digital data indicative of the selected receiving channel(s) to the transducer **175** during the transducer mode, as will be described below. The transducer **175**, upon receiving and decoding such digital data, then starts transmitting in the selected receiving channel(s). In accordance with another embodiment of the present invention, when two or more combination touch and transducer input systems are used together (e.g., close to each other), the transducers of those systems are configured to transmit electric fields at different frequencies (or at different sets of frequencies) from each other, so as to avoid cross-coupling between the two or more systems.

[0095] As described above, the position of the transducer **175** is determined based on measured attributes (e.g., amplitudes, phases, etc.) of a plurality of sensing signals, which are induced in the array of electrodes **154** by the electric field generated by the transducer **175**. For example, amplitudes of the multiple signals induced in multiple electrodes, respectively, may be measured and compared with each other to identify the greatest amplitude. The position of the transducer **175** is determined based on the general notion that the signal having the greatest amplitude is induced in the electrode that is closest to the transducer **175**. In other embodiments, phases of the multiple signals induced in multiple electrodes, respectively, may be measured and compared with each other to determine the position of the transducer **175**. For example, with a 300 MHz transducer signal, the phase difference in signals induced in two electrodes that are 5 cm apart would be 18 degrees. By digitizing the signals using a 600 MHz ADC, their phases can be reconstructed. By monitoring the phase shift in each electrode, the relative movement of the transducer with respect to each electrode can be determined. For instance, continuing with the same example, if the transducer moves by 1 cm away from an electrode, the phase of a signal induced in that electrode would shift by 3.6 degrees. With this method, only the relative movement of the transducer with respect to each electrode is known. By periodically changing the frequencies of the transducer signal, the timing at which different electrodes sense phase shifts can be detected and compared. The first electrode that senses a phase shift after a frequency change is the one that is closest to the transducer. Then, by detecting subsequent phase shifts sensed in other electrodes, the absolute position of the transducer can be determined. Thereafter, with the same frequency, the phase shifts in different electrodes are monitored to determine the relative movement of the transducer with respect to each electrode until the next frequency change, at which time the absolute position of the transducer can be determined again.

[0096] According to various exemplary embodiments of the present invention, a curve-fitting technique is employed in determining the position of the transducer **175** based on the attributes (e.g., amplitudes, phases, etc.) of the signals induced in the array of electrodes **154**, which are subsequently converted to digital values and filtered. In this regard, the MPU **420** is configured to perform a curve fitting with the digital values, either within MPU **420** or in combination with one or more processors, such as a main processor included in a host device (e.g., a PC that incorporates a combination touch and transducer input system of the invention as an input/display system). Such distributed processing may be used in some applications when the curve-fitting processing is computationally intensive. In this case, the measured and filtered signals from the array of electrodes **154** may be ported from the MPU **420** to the processor in a host system for further processing, and thereafter the resulting signals may be ported back into the MPU **420**, via a serial interface such as a selectable USB or RS232 interface (see FIG. **5**A).

[0097] Any suitable parameterized curve can be used in the curve fitting. In accordance with various exemplary embodiments of the present invention, a suitable curve can be empirically derived for any combination touch and transducer input system including a transducer that has a particular tip (antenna) shape and an array of electrodes that has a particular electrode configuration pattern (i.e., the shape of each electrode and the pattern in which the array of electrodes are arranged). The transducer position determination based on curve-fitting is advantageous in that a suitable curve can be derived for virtually any combination touch and transducer input system, and also a curve derived for a particular combination touch and transducer input system can be robustly applied in the same combination touch and transducer input systems that are then mass produced. This is because the curve-fitting technique is sufficiently robust to account for normal variations expected in the manufacturing processes of the systems, such as in an ITO manufacturing process. Because such curves can be calibrated for a wide variety of different electrode shapes and array patterns, this technique facilitates the use of many different shapes and configurations of the array of electrodes, including those shapes and configurations that have been primarily designed for capacitive touch sensing.

[0098] FIG. **13**A is a flow chart illustrating a sample process used to determine a position of the transducer based on a curve-fitting technique, according to one embodiment of the present invention. In step **1300**, signal data induced in the array of electrodes **154** are collected as the transducer **175** is placed at multiple known positions over the array of electrodes. In step **1302**, a parameterized curve is defined that best fits the collected signal data. These two steps may be performed at design time, and the defined curve is then stored in the controller **152** of the sensor **150**. In step **1304**, during a transducer mode, signal data induced in the array of electrodes **154** by the transducer **175** are collected, wherein the position of the transducer is unknown to the controller **152**. In step **1306**, the position of the transducer is determined by fitting the data collected at step **1304** above to the defined curve. Each of these steps will be described in detail below.

[0099] In accordance with exemplary embodiments of the present invention, two fitting curves may be derived, one for the X-position determination and the other for the Y-position determination, though the same curve may be used for both of the X- and Y-position determinations in some applications. For curve-fitting in each of the X and Y directions (columns and rows of the array of electrodes, respectively), the attributes (e.g., amplitudes, phases, etc.) of the signals induced in X electrodes and Y electrodes are established empirically or theoretically. One experimental method of establishing the attributes involves scanning a transducer **175** over and across the array of electrodes **154** with a robotic arm or other suitable instrument. The robotic arm may be commanded to move to a known position, with a known tilt (e.g., during the x-position scan, an angle formed between the transducer axis that lies in the X-Z plane and a line normal to the sensing surface), and with a known height above the sensing surface. During the X-position scan, the attributes of signals induced in the X electrodes are continuously recorded in an automated fashion as the transducer is moved across and over the array of electrodes until a good coverage of the entire array of electrodes is achieved. Together with the movement of the transducer in the X and Y directions, the tilt and/or height of the transducer may also be changed. For example, for twenty (20) X electrodes, 2000 transducer positions (with tilt and/or height) may be used to record the attributes of signals induced in the X electrodes. The actual number of measurements needed would typically depend on the symmetries in the configuration of the array of electrodes **154**. If symmetries exist, the measurement data recorded for a portion of the array of electrodes **154** may be used to infer the measurement data for a corresponding symmetrical portion. (Step **1300** in FIG. **13**A.) A similar process may be repeated for the Y-position scan.

[0100] Once all the measurement data for the X and Y electrodes are empirically or theoretically established, the data can be arranged to be a set of measurement data, in which each position (and tilt/height) of the transducer **175** is associated with the attributes of signals induced in the X and Y electrodes by the electric field generated by the transducer at that position.

[0101] Then, the data is applied to appropriate mathematical equation (s) which are used as the curve fitting equation (s). In other words, a curve fitting equation, or a parameterized curve, is established that fits the data. Possible curves that can be used are polynomials, rational polynomials, and combinations of trigonometric, logarithmic, and exponential functions. In very simple geometries, a straight linear interpolation may suffice. A rational polynomial may provide a good compromise between accuracy and speed for computation. For X electrodes that consist of identical rectangular conductor strips, a polynomial may be defined as follows, for example:

$$\text{poly}(x) = \frac{ax^4 + bx^2 + c}{dx^4 + ex^2 + f} \qquad \text{Equation (6)}$$

The above equation assumes the ith X electrode in a series of X electrodes as a center electrode, and looks at the expected amplitudes on that ith electrode as the transducer moves from left to right across that ith electrode, wherein x represents the distance from the center of that ith electrode, with $x<0$ indicating that the transducer is to the left of the center of the ith electrode, $x>0$ indicating that the transducer is to the right of the center of the ith electrode, and $x=0$ indicating that the transducer is at the center of the ith electrode. This rational polynomial typically has a peak at $x=0$ when the transducer is

at the center (or right above) of the ith electrode, and the amplitude of the ith electrode decreases as the transducer moves to the left or the right of the ith electrode. An example curve based on Equation (6) is shown in FIG. **13**B. In the equation, the values for a, b, c, d, e and f are calibration parameters determined empirically for the particular transducer tip shape and the electrode configuration pattern being used. In this embodiment, because each electrode in the array of electrodes **154** is configured the same, the same curve may be generated for each of the X electrodes. Typically, these calibration parameters would be defined separately for the X and Y electrodes (to thereby produce two curves for X and Y electrodes, respectively), although that is not required in all cases. It should be noted that Equation (6) is one example of a rational polynomial that can be used. Other polynomials or combinations of functions may also be used. (Step **1032** in FIG. **13**A.)

[0102] With the curve fitting equation (or the parameterized curve) selected, and the calibration values determined empirically, the MPU **420** is now ready to fit the incoming data to the derived curve to determine the position of the transducer **175**. This "second" curve fitting can be performed using a variety of different techniques. For example, the position of the transducer can be determined by minimizing the sum of the squares between the curve fitting equation and the measured amplitudes, respectively. One example of this technique involves solving the following problem:

$$\min\left(\sum_{i=1}^{N}\|A_i - p(x_i - x_{pen})\|^2\right) \qquad \text{Problem (7)}$$

In this example, to determine the X position of the transducer, the amplitudes induced in a series (or a plurality of) the X electrodes, such as x_1, x_2, x_3, x_4, x_5 are measured as A_1, A_2, A_3, A_4, A_5, respectively, and inputted to the problem above, where p(x) is the curve fitting equation derived above. When X electrode x_3 is selected as a center electrode, the position of the transducer x_{pen} relative to x_3 (e.g., a negative value to the left of the center of x_3 and a positive value to the right of the center of x_3) can be determined by solving the problem, i.e., by determining the value x_{pen} that minimizes the sum. The process may be then repeated for another set of X electrodes, such as for x_6, x_7, x_8, x_9, x_{10}. Similarly, the process is repeated to find the value y_{pen}, along the Y direction. By performing the curve fitting for both the X position and the Y position, the accurate position of the transducer can be determined. (Steps **1304** and **1306** of FIG. **13**A.)

[0103] Another technique for fitting the incoming amplitude measurement data to the predefined curve uses the greatest distance between any two points. One example of this technique entails solving the following problem:

$$\min_{x_{pen}}\left\{\max_i\|A_i - p(x_i - x_{pen})\|\right\} \qquad \text{Problem (8)}$$

This technique finds the value x_{pen} that minimizes the greatest distance between any two points, and thus finds the best worst-case fit. This technique may be useful if a derived curve has a very flat response.

[0104] As further examples, techniques such as Marquardt-Levenberg and Gauss-Newton can be used to quickly determine the minimum values as in Problems (7) and (8) above. These techniques typically start by using an initial estimate for x_{pen} followed by refining the estimate using the derivatives of p(x). The process is continued iteratively, with the estimate for x_{pen} being adjusted, until little further improvement in the minimum value is achieved. At this point, a minimum value is found and x_{pen} is determined. Another type of curve fit algorithm uses a binary type search. In this case, a likely starting value is chosen, and a value is searched backward and forward, starting with no more than an electrode strip difference, and sub-dividing the difference until a best answer is achieved. This technique may be useful where Marquardt-Levenberg or Gauss-Newton methods are unsuited in a particular application. As another example, a 2D fitting simultaneously for X-Y directions may also be used.

[0105] As described above, the attributes of signals induced in the array of electrodes **154** may be measured with the tilt and/or height of the transducer being changed. Thus, a parameterized curve may be derived or adjusted, which further accounts for other data such as the tilt and/or height of the transducer. Then, the height (or "hover") of the transducer above the sensing surface may be found by solving the following problem, for example:

$$\min_{x_{pen},h}\left(\sum_{i=1}^{7}\|A_i - h * p(x_i - x_{pen})\|^2\right) \qquad \text{Problem (9)}$$

In this example, seven X electrodes are used (with x_4 as a center electrode), with amplitude Ai detected in the ith electrode, and h is the height. The X position of the transducer x_{pen} relative to x_4 and the height h are found by determining the values x_{pen} and h that minimize the sum. In the problem above, note that the signal strength decreases proportionally to 1/h, as the transducer moves away from the sensing surface.

[0106] In another example, the tilt of the transducer may be parameterized in terms of the following equation including trigonometric functions, which is suitable for use in a magnetic coupling embodiment:

$$P = \left|\frac{\sin\left(p_{tilt} + \tan^{-1}\left(\frac{x_i - W_{ito}}{h}\right)\right)}{\sqrt{((x_i - W_{ito})^2 + h^2)}} - \frac{\sin\left(p_{tilt} + \tan^{-1}\left(\frac{x_i + W_{ito}}{h}\right)\right)}{\sqrt{((x_i - W_{ito})^2 + h^2)}}\right| \qquad \text{Equation (10)}$$

where P_{tilt} is the tilt angle relative to the axis perpendicular to the sensing surface in the X direction, and W_{ito} is the width of one electrode loop.

[0107] In another variation on this technique, the curve fitting can be weighted to increase accuracy. Typically this is done by weighting stronger signals a greater amount, as the stronger signals typically have a higher signal to noise ratio. In some cases, it may be desirable to start with an initial estimate for x_{pen} at the center of the strongest-signal electrode. This improves the probability that the actual minimum will be found by a search algorithm.

[0108] As used herein, and as supported by the description above, the term "curve fitting" or "fitting" refers to one or more of a wide range of techniques used to construct one or more curves that best fit "test" data and to subsequently use the one or more curves to process "actual" data. Various examples are disclosed, in which a defined curve is fitted to actual data by minimizing error (e.g., the sum of the squares) between the curve and the actual data, or in which the curve is fitted through an iterative process. In other examples, however, a non-iterative process may be used, For example, with least squares linear regression, a good fit can be obtained without iteration and without having to minimize error. It is also possible to sacrifice some positioning data in exchange for a faster algorithm. For example, with certain arrays of electrodes having linear electrodes with good signal to noise ratio, a simple linear interpolation method can be used between two electrodes with the highest amplitudes, to thereby determine the position of the transducer.

[0109] As described above, according to various exemplary embodiments of the present invention, the transducer controller **177** selectively generates an electric field at multiple frequencies and, more specifically, at sequentially different frequencies using a frequency hopping technique. Specifically, in various embodiments of the present invention, the MCU **318** in the transducer controller **177** includes an onboard digitally controlled oscillator that is configured to selectively generate an antenna driving signal at a range of different frequencies. Hopping from one frequency to another in driving the antenna **179** correspondingly changes the frequency of the electric field generated by the antenna **179**, to achieve improved noise rejection. Furthermore, these different frequencies can be used to encode and send digital data from the transducer **175** to the array of electrodes **154** and hence to the sensor controller **152**. For example, suitable Frequency-Shift Keying (FSK) techniques can be used to encode and transmit digital data regarding the transducer, such as pressure data, switch status data, and transducer ID data. The transducer ID data may be useful for the sensor **150** to uniquely identify a particular transducer. For example, when the sensor **150** is used in a point-of-sale system and different sales agents carry different transducers, the sensor can automatically identify a particular sales agent inputting data based on the transducer ID data received from the agent's transducer. As another example, when a plurality of combination touch and transducer input systems in accordance with the present invention are used close to each other, it would be desirable for each sensor to uniquely identify its corresponding transducer (while discriminating against other transducers) so as to process only the signal received from the corresponding transducer.

[0110] In accordance with one aspect of the invention, the frequencies used in communication between the transducer **175** and the sensor **150** may be defined by dividing down a known (base) frequency. This method provides an advantage of avoiding harmonics of a base frequency and providing better noise rejection. In one example, the transducer **175** operates in two modes. The first mode is a low power mode, which can generate four frequencies. The second mode is a high power mode, which consumes more power than the low power mode, but provides a larger number of frequencies that are not harmonics of the base frequency. Table 1 below shows the possible frequencies that could be used by the transducer according to one embodiment of the invention.

TABLE 1

500 KHz Base Frequency (Low Power)		2 MHz Base Frequency (High Power)	
Divisor	Pen Transmit Frequency (KHz)	Divisor	Pen Transmit Frequency (KHz)
2	250	8	250
		9	222
		10	200
		11	182
3	166	12	166
		13	154
		14	143
		15	133
4	125	16	125
		17	118
		18	111
		19	105
5	100	20	100

In both the low power mode and the high power mode, usable frequencies are determined by dividing down a base frequency (500 KHz and 2 MHz, respectively). It should be noted that Table 1 above shows merely one example of a set of different frequencies that are usable according to one embodiment of the invention, and other sets of different frequencies may be selected for use in accordance with other embodiments of the invention. Various other methods may be used to select a set of different suitable frequencies, such as a method using Phased Locked Loops (PLLs).

[0111] Construction of a PLL is well known in the art. A sample PLL suitable for use pursuant to an embodiment of the present invention is shown in FIG. **13**C, which includes a reference frequency (Rf) **1310**, a Voltage Controlled Oscillator (VCO) **1312**, a phase detector **1314**, and a loop filter consisting of an operational amplifier **1316** and two resistors **1318***a* and **1318***b*. To generate different frequencies from the reference frequency (Rf), the PLL includes one or more frequency dividers ("M" divider **1320** and "N" divider **1322** in the illustrated embodiment). The illustrated PLL can generate frequencies of the form M/N based on the reference frequency (Rf). This allows a vast range of frequencies to be created, which share a base frequency that is a fraction of a hertz. For example, if N can range from 1 to 16, one may select 16, 15, 13, and 11 as the divisors in the "N" divider **1322**. If 11 or 7 is selected as the divisor in the "M" divider **1320**, and the reference frequency (Rf) is 500 KHz, the following output frequencies could be generated:

11/16*500 KHz=343.75 KHz

11/15*500 KHz=366.67 KHz

11/13*500 KHz=423.08 KHz

7/11*500 KHz=318.18 KHz

These frequencies all share a fundamental frequency of less than ¼ of a hertz. The PLL can advantageously generate a range of frequencies that are closer together with little similar harmonic content. This allows for the use of narrower bandpass filters (**508**) in the analog processing stage **414** of the sensor controller **152**, thereby increasing the signal to noise ratio before the digitization of the signal.

[0112] In one embodiment, the transducer **175** is configured to generate four different frequencies within a specified range (e.g., 100 kHz, 125 kHz, 166 kHz, and 250 kHz as in the

"low power" mode in Table 1 above). The transducer controller **177** is configured to switch between these four different frequencies as needed for noise rejection or to encode digital data in frequency shifts. A variety of techniques can be used to encode digital data using frequency hopping, and any suitable Frequency-Shift Keying (FSK) technique may be used. Additionally or alternatively, any suitable Amplitude-Shift Keying (ASK) technique, Phase-Shift Keying (PSK) technique, or more complicated encoding schemes such as Quadrature Amplitude Modulation (QAM) scheme may be used to encode digital data.

[0113] As one specific example, Manchester type code may be used to encode digital data, wherein a transition of frequencies from high to low transmits a "1," while a transition of frequencies from low to high transmits a "0." Table 2 below illustrates a sample data encoding scheme based on Manchester type code.

TABLE 2

Encoding	Meaning
111	Start of frame (SOF)
001	Send a 0
011	Send a 1
000	End of frame (EOF)

As shown above, three successive transitions of high to low ("111") indicate a start of frame (SOF), and three successive transitions of low to high ("000") indicate an end of frame (EOF). In between the SOF and EOF, any three transitions of "001" sends a "0" and any three transitions of "011" sends a "1". These digital data (SOF, 0, 1, and EOF) are transmitted in data frames, an example of which is shown in FIG. **14**. The data frame as shown in FIG. **14** has a unique start bit sequence (SOF) and end bit sequence (EOF) and, therefore, can have different lengths. The data frame of FIG. **14** includes a start of frame (SOF) block **950**, followed by a data type block **952** (2 bits), a payload data block **954** (3-24 bits), and finally by an end of frame (EOF) block **956**. Table 3 below shows one example of data frame formats for each type of data.

TABLE 3

Data Type	Value	Data Length (bits)	Comments
Pen ID	00	24	Enough for 16 million unique factory-programmed pen ID's
Switch	01	3	Can provide for 3 switches, each with two or more states (e.g., ON/OFF)
Pressure	10	8	Up to 256 pressure values

In the above example, 2 bits of "00" indicate "pen ID" data, to be followed by 24 bits indicating a unique pen ID number. 2 bits of "01" indicate "switch status" data, to be followed by 3 bits indicating a status of one of up to three switches. Finally, 2 bits of "10" indicate "pressure" data, to be followed by 8 bits indicating the detected pressure value. Though only three types of data are shown above, more or different types of data may be defined to be digitally encoded. For example, data derived from any other sensors provided on the transducer **175**, such as a tilt sensor or a rotational sensor, or the operating mode of the transducer **175** (e.g., "awake mode" or "sleep mode") may be defined and digitally encoded.

[0114] Table 4 below shows one example of a data frame containing switch status data.

TABLE 4

SOF			Data type (Side Switch)						First Switch is pressed									EOF		
SOF			0			1			1			0			0			EOF		
1	1	1	0	0	1	0	1	1	0	1	1	0	0	1	0	0	1	0	0	0

In the example above, first, three successive frequency transitions of high to low ("111") indicate a start of frame (SOF). The next 2 bits of "01" are generated by the frequency transitions of "001" and "011" and indicate that this data frame includes "switch status" data and that the payload data are 3-bits long. The following 3 bits of "100" are generated by the frequency transitions of "011", "001" and "001," respectively, and indicate that a first switch is pressed. Lastly, the three successive frequency transitions of low to high ("000") indicate an end of frame (EOF).

[0115] The rate of data transmission provided by the methods described above would depend upon the rate of frequency hopping. For example, if the frequency hopping can be made to occur every 250 μs, with four possible frequencies, the system can transmit a throughput of 1000 bits per second.

[0116] The present invention is not limited to the particular examples described above, and various other digital encoding or modulation techniques may be used as well as other data frame formats. For example, other encoding techniques with advanced features such as error correction may be used (e.g., Reed-Solomon coding technique).

[0117] FIG. **15** is a flow chart illustrating an exemplary process to be performed generally by the transducer controller **177**, and more specifically by the MCU **318** thereof, including the process of encoding and transmitting digital data to the sensor **150**, according to one embodiment of the invention. After the transducer "wakes up," in step **1060**, a timer is set to go to "sleep." Once the timer is set to "sleep" and a certain amount of time elapses, i.e., when the timer expires, the transducer goes to "sleep." In step **1062**, the pen tip pressure is read from the pressure sensor **306**. In step **1064**, it is determined whether the pen tip pressure detected in step **1062** is above a threshold value. If yes, proceeding to step **1066**, the timer is reset to go to "sleep". Then, in step **1068**, the pen tip pressure is encoded as digital data and transmitted to the sensor **150**. Likewise, in step **1070**, the side switch status is encoded as digital data and transmitted to the sensor **150**. In step **1072**, it is determined whether the side switch status has been changed. If yes, in step **1074**, the timer is reset to go to "sleep". Then, in step **1076**, pen ID information is encoded as digital data and transmitted to the sensor **150**. In step **1078**, it is determined whether the timer has expired. If not (for

example, due to the timer having been reset in steps **1066** and **1074**), the process returns to step **1062**, and the pen tip pressure is read again and the process repeats itself. If, on the other hand, it is determined in step **1078** that the timer has expired, it proceeds to step **1080** and the transducer goes to "sleep." Thus, the transducer wakes up (and resets the "sleep" timer) whenever an interrupt is generated. An interrupt is generated when the detected pen tip pressure exceeds a threshold value (step **1064**) or when the side switch status has been changed (step **1072**).

[0118] FIG. **16** is a flow chart illustrating an exemplary process to be performed generally by the sensor controller **152** for decoding digital data encoded in frequency shifts of a signal generated by the transducer **175**. In step **1020**, a pen frequency state is set to "unknown." In step **1022**, it is determined whether a pen frequency has been detected. If yes, in step **1024**, it is determined whether the pen frequency state is "unknown." Specifically, in this example, there may be ten frequency states that are predefined. If the frequency detected in step **1022** is not any of the "known" frequency states, then proceeding to step **1026**, it is marked that the frequency-moving direction (is unknown and thus) needs to be searched, and thereafter returning to step **1022** it is determined whether a pen frequency has been detected. If in step **1024** it is determined that the pen frequency detected in step **1022** is one of the "known" frequency states, then proceeding to step **1028**, it is determined whether the frequency has changed since the last detection. If no, again returning to step **1022**, it is determined whether a pen frequency has been detected.

[0119] If, in step **1028**, it is determined that the frequency has changed since the last detection, proceeding to step **1030**, it is determined whether the frequency-moving direction needs to be searched. Initially, the frequency-moving direction is unknown and thus needs to be searched. Therefore, proceeding to step **1032**, it is determined whether the presently-detected frequency is lower than the last-detected frequency. If yes, proceeding to step **1034**, it is marked that the frequency is going "high to low," while if no, proceeding to step **1036**, it is marked that the frequency is going "low to high." From either of steps **1034** and **1036**, returning to step **1022**, it is again determined whether a pen frequency has been detected ("yes" in this case coming from either of steps **1034** and **1036**). Proceeding down to step **1028**, if it is determined that the frequency has changed since the last detection ("yes" in this case coming from either of steps **1034** and **1036**), in step **1030**, it is determined whether the frequency-moving direction needs to be searched. At this time, the frequency-moving direction has already been marked as either "high to low" (in step **1034**) or "low to high" (in step **1036**). Thus, the frequency-moving direction need not be searched, and proceeding to step **1038**, it is determined whether the presently-detected frequency has moved from the last-detected frequency in the same direction as the frequency-moving direction as previously marked in steps **1034** or **1036**. If yes, proceeding to step **1040**, "1" is recorded if the frequency-moving direction is "high to low" and "0" is recorded if the frequency-moving direction is "low to high."

[0120] Thereafter, proceeding to step **1042**, it is determined whether the presently-detected frequency is greater than a predefined threshold, such as 143 kHz in the illustrated embodiment. The threshold is predefined generally near a middle point in the range of predefined frequencies (e.g., 143 kHz, within the range expanding from 100 kHz to 250 kHz in the illustrated embodiment). If the presently-detected frequency is greater than the predefined threshold, in step **1044** it is marked that the frequency-moving direction is "high to low", while if the presently-detected frequency is equal to or less than the predefined threshold, in step **1046** it is marked that the frequency-moving direction is "low to high." From either of steps **1044** and **1046**, returning to step **1022**, it is again determined whether a pen frequency has been detected. If not, proceeding to step **1048**, it is determined whether more than a predefined amount of time has elapsed since the last detection of a frequency. If so, proceeding to step **1050**, a start of a new word (or a new data frame) is indicated.

[0121] In some embodiments of the present invention, digital encoding and communication using frequency hopping is achieved bi-directionally between the transducer **175** and the sensor **150**. Digital data can be encoded in a similar manner by the sensor **150** and transmitted to the transducer **175**. The types of data that are digitally encoded by the sensor **150** may include, for example, sensor ID data, receiving channel data (i.e., which frequency channels should be used), and the operating mode of the sensor **150**. Further additionally or alternatively, digital data regarding pressure, switch status, pen ID and others, may be transmitted between the transducer **175** and the sensor **150** using other RF techniques such as via a Bluetooth device pursuant to IEEE 802.15 standards including Bluetooth and ZigBee protocols.

[0122] According to one aspect of the invention, a cordless transducer **175** is provided, which is configured for use with an array of electrodes **154**, wherein the cordless transducer **175** and the array of electrodes **154** are capacitively coupled. The cordless transducer **175** includes a pen-shaped housing (**330** in FIG. **3**B) including a pen tip (**179** in FIG. **3**B) at its distal end, and a transducer controller **177** arranged within the pen-shaped housing **330**. The transducer controller **177** controls the operation of the cordless transducer **175**, and includes a pressure sensor **306** for detecting the pressure applied to the pen tip. The cordless transducer **175** also includes an antenna **179** coupled to the transducer controller **177** to transmit the pressure sensor data, which is detected by the pressure sensor **306**, as digital data to the array of electrodes **154**. The transducer controller **177** includes a power storage device, such as a battery or a capacitor (**314**), which supplies power to drive the transducer controller **177** and the antenna **179**, to thereby achieve the cordless transducer.

[0123] The cordless transducer **175**, described above, may be provided with a suitable sensor **150** to together form a combination touch and transducer input system. In some embodiments, the combination touch and transducer input system may further include a docking (charging) station, suitably formed to receive the cordless transducer **175** therein to charge the capacitor (**314** in FIG. **4**) via the charge input connector **315**.

[0124] According to a further aspect of the invention, a method is provided for selectively determining a position of a proximate object and a position of a transducer. The method includes eight steps. First, the proximate object is capacitively sensed with an array of electrodes **154**. Second, a position of the proximate object is determined based on the capacitive sensing. Third, an electric field is generated with the transducer **175**. Fourth, digital data is transmitted from the transducer **175**. Fifth, a plurality of sensing signals are induced based on the electric field in a corresponding plurality of electrodes in the array of electrodes **154**. Sixth, attributes of the plurality of sensing signals are measured. Seventh, a position of the transducer **175** is determined based

on the measured attributes of the plurality of sensing signals. Eighth, the digital data is received with the array of electrodes **154**.

[0125] According to one aspect of the invention, the transducer **175** and the sensor **150** can communicate asynchronously for the purpose of both transducer position determination and digital data communication. Specifically, because the systems and methods of the present invention according to some embodiments rely on determining the amplitude and frequencies of the signals induced in the electrodes, it does not require a specific phase correlation between the transducer **175** and the sensor **150**. This has many potential advantages. For example, it does not require the use of a wired or dedicated wireless link for syncing. Dedicated wireless links for syncing can require a bulky transmitter on the part of the sensor **150**. Furthermore, the dedicated wireless links for syncing could provide a possible source of interference with other devices, and also are more likely to be interfered with by other devices. Additionally, the asynchronous design achievable with the present invention facilitates the use of different frequencies between the transducer **175** and the sensor **150**. Asynchronous designs are also less likely to degrade over time, and are more likely to be compatible with a wide range of devices.

[0126] The embodiments and examples set forth herein were presented in order to describe the present invention and its particular application and to thereby enable those skilled in the art to make and use the invention. However, those skilled in the art will recognize that the foregoing description and examples have been presented for the purposes of illustration and example only. The description as set forth is not intended to be exhaustive or to limit the invention to the precise form disclosed. Many modifications and variations are possible in light of the above teaching without departing from the spirit of the forthcoming claims.

1. A combination touch and transducer input system, comprising:

a transducer configured to generate an electric field;

an array of electrodes; and

a controller coupled to the array of electrodes, the controller being configured to:

when operating in a touch mode, determine a position of a proximate object by capacitively sensing the object with the array of electrodes; and

when operating in a transducer mode, determine a position of the transducer by measuring attributes of a plurality of sensing signals, the plurality of sensing signals being induced in the array of electrodes by the electric field generated by the transducer;

wherein the transducer is configured to transmit digital data to the array of electrodes, and the controller is configured to receive the digital data via the array of electrodes.

2. The system of claim **1**, wherein the controller is configured, when operating in the transducer mode, to measure amplitudes of the plurality of sensing signals.

3. The system of claim **1**, wherein the transducer comprises electronic circuitry configured to selectively generate the electric field at multiple frequencies and to encode the digital data in frequency shifts of the generated field, and the controller is configured to detect the plurality of sensing signals at multiple frequencies and to decode the digital data encoded in the frequency shifts.

4. The system of claim **1**, wherein the digital data includes one or more of a pressure data, switch status data, and transducer identification data.

5. The system of claim **1**, wherein the transducer comprises electronic circuitry configured to encode the digital data in phase shifts or amplitude shifts of the generated electric field.

6. The system of claim **1**, wherein the transducer and the controller communicate asynchronously.

7. The system of claim **1**, wherein the transducer is configured to selectively generate the electric field at multiple frequencies and the controller is further configured to select one of the multiple frequency channels as a receiving channel.

8. The system of claim **7**, wherein the controller determines a signal-to-noise ratio for each frequency channel and selects the frequency channel having the highest signal-to-noise ratio as the receiving channel.

9. The system of claim **1**, wherein the controller is further configured to transmit digital data to the transducer, and the transducer is configured to receive the digital data.

10. The system of claim **1**, wherein the transducer is configured to generate the electric field at a first set of one or more frequencies and the controller is configured to detect the generated electric field at the first set of one or more frequencies,

wherein a second combination touch and transducer input system is provided, comprising a second transducer, a second array of electrodes, and a second controller, the second transducer being configured to generate an electric field at a second set of one or more frequencies different from the first set of one or more frequencies and the second controller being configured to detect the generated elected field at the second set of one or more frequencies.

11. The system of claim **1**, wherein the controller is further configured to determine the position of the transducer by fitting at least some of the measured attributes of the plurality of sensing signals to a pre-determined parameterized curve.

12. The system of claim **1**, wherein the array of electrodes comprises:

a first set of elongate electrodes arranged substantially in parallel with each other and extending in a first direction; and

a second set of elongate electrodes arranged substantially in parallel with each other and extending in a second direction that is different from the first direction;

wherein each pair of at least one of the first set of elongate electrodes and at least one of the second set of elongate electrodes forms a capacitor;

wherein the transducer and the array of electrodes are electrically coupled; and

wherein the controller is further configured to:

when operating in the touch mode, supply a signal to each of the first set of elongate electrodes, detect a capacitance change reflected in a signal outputted from each of the second set of elongate electrodes, and determine the position of the proximate object based on the detected capacitance change; and

when operating in the transducer mode, measure attributes of a plurality of sensing signals outputted from the first and second sets of elongate electrodes and calculate the position of the transducer based on the measured attributes.

13. The system of claim **12**, wherein the controller is further configured to, when operating in the transducer mode:

measure an attribute of a sensing signal outputted from each of the first set of elongate electrodes while selectively terminating two or more of the first set of elongate electrodes that are adjacent to the elongate electrode being sensed, and

measure an attribute of a sensing signal outputted from each of the second set of elongate electrodes while selectively terminating two or more of the second set of elongate electrodes that are adjacent to the elongate electrode being sensed.

14. The system of claim **13**, wherein the two or more of the first set of elongate electrodes that are adjacent to the elongate electrode being sensed are grounded, and the two or more of the second set of elongate electrodes that are adjacent to the elongate electrode being sensed are grounded.

15. The system of claim **13**, wherein the two or more of the first set of elongate electrodes that are adjacent to the elongate electrode being sensed are floated, and the two or more of the second set of elongate electrodes that are adjacent to the elongate electrode being sensed are floated.

16. The system of claim **13**, wherein the two or more of the first set of elongate electrodes that are adjacent to the elongate electrode being sensed are terminated via an impedance to ground, and the two or more of the second set of elongate electrodes that are adjacent to the elongate electrode being sensed are terminated via an impedance to ground.

17. The system of claim **1**, wherein the controller is configured to alternate between operating in the touch mode and operating in the transducer mode in successive sampling periods of the system.

18. The system of claim **1**, wherein the controller is configured to selectively divide the array of electrodes into a touch mode section and a transducer mode section, and to simultaneously operate in the touch mode in the touch mode section and in the transducer mode in the transducer mode section.

19. The system of claim **18**, wherein the controller periodically switches the touch mode section and the transducer mode section such that a given point on the array of electrodes alternates between being in the touch mode section and being in the transducer mode section.

20. The system of claim **18**, wherein the touch mode section includes a plurality of touch mode sub-sections and the transducer mode section includes a plurality of transducer mode sub-sections.

21. The system of claim **1**, wherein the controller includes an amplifier selected from a group consisting of a charge amplifier, a voltage amplifier, a transimpedance amplifier, and a cascoded transimpedance amplifier, each being coupled to the array of electrodes and configured to amplify the plurality of sensing signals induced by the electric field in the array of electrodes.

22. The system of claim **1**, wherein the transducer includes a capacitor or a battery configured to function as a power source for the transducer.

23. A method of selectively determining a position of a proximate object and a position of a transducer, the method comprising the steps of:

capacitively sensing the proximate object with an array of electrodes;

determining a position of the proximate object based on said capacitive sensing;

generating an electric field with the transducer;

transmitting digital data from the transducer;

inducing a plurality of sensing signals, based on the electric field, in a corresponding plurality of electrodes in the array of electrodes;

measuring attributes of the plurality of sensing signals;

determining a position of the transducer based on the measured attributes of the plurality of sensing signals; and

receiving the digital data with the array of electrodes.

24. The method of claim **23**, wherein the step of generating an electric field with the transducer comprises selectively generating the electric field at multiple frequencies with the transducer, and the step of transmitting digital data with the transducer comprises encoding digital data in frequency shifts of the electric field for transmission.

25. The method of claim **23**, wherein the data includes one or more of a pressure data, switch status data, and transducer identification data.

26. A cordless transducer configured for use with an array of electrodes, wherein the cordless transducer and the array of electrodes are capacitively coupled, the cordless transducer comprising:

a pen-shaped housing including a pen tip at its distal end;

a transducer controller arranged within the pen-shaped housing and configured to control the operation of the cordless transducer, the transducer controller including a pressure sensor configured to detect the pressure applied to the pen tip, the transducer controller further including a power storage device; and

an antenna coupled to the transducer controller to transmit the pressure sensor data, which is detected by the pressure sensor, as digital data to the array of electrodes;

wherein the power storage device supplies power to drive the transducer controller.

27. The cordless transducer of claim **26**, wherein the power storage device comprises a battery.

28. The cordless transducer of claim **26**, wherein the power storage device comprises a capacitor.

29. The cordless transducer of claim **28**, wherein the capacitor is configured to be charged with power transmitted from a powering antenna.

30. The cordless transducer of claim **29**, wherein the powering antenna is located on or near the array of electrodes.

31. The cordless transducer of claim **28**, wherein the capacitor is configured to be charged when the cordless transducer is placed in a charging station.

32. The cordless transducer of claim **26**, wherein the transducer controller is configured to awaken the cordless transducer from a sleep mode based on the pressure sensor data detected by the pressure sensor.

33. A combination touch and transducer input system, comprising:

(a) a cordless transducer configured to generate an electric field, the cordless transducer comprising:

(i) a pen-shaped housing including a pen tip at its distal end;

(ii) a transducer controller arranged within the pen-shaped housing and configured to control the operation of the cordless transducer, the transducer controller including a pressure sensor configured to detect the pressure applied to the pen tip, the transducer controller further including a power storage device; and

(iii) an antenna coupled to the transducer controller to transmit the pressure sensor data, which is detected by the pressure sensor, as digital data, wherein the power storage device supplies power to drive the transducer controller; and

(b) a sensor comprising:

(i) an array of electrodes; and

(ii) a sensor controller coupled to the array of electrodes, the sensor controller being configured to:

when operating in a touch mode, determine a position of a proximate object by capacitively sensing the object with the array of electrodes; and

when operating in a transducer mode, determine a position of the cordless transducer by measuring attributes of a plurality of sensing signals, the plurality of sensing signals being induced in the array of electrodes by the electric field generated by the cordless transducer;

wherein the sensor is configured to receive the pressure sensor data as digital data from the cordless transducer.

34. The combination touch and transducer input system of claim **33**, wherein the power storage device of the cordless transducer comprises a capacitor, and the system further comprises a charging station that is configured to charge the capacitor when the cordless transducer is placed in the charging station.

35. The combination touch and transducer input system of claim **33**, wherein the array of electrodes is formed on a single layer without substantially overlapping with each other.

36. A combination touch and transducer input system, comprising:

a transducer configured to generate an electric field;

an array of electrodes, and

a controller coupled to the array of electrodes, the controller being configured to:

when operating in a touch mode, determine a position of a proximate object by capacitively sensing the object with the array of electrodes; and

when operating in a transducer mode, determine a position of the transducer by measuring attributes of a plurality of sensing signals, the plurality of sensing signals being induced in the array of electrodes by the electric field generated by the transducer,

wherein the controller is further configured to determine the position of the transducer by fitting at least some of the measured attributes of the plurality of sensing signals to a pre-determined parameterized curve, the pre-determined parameterized curve relating a plurality of positions of the transducer relative to one electrode with a plurality of attributes of sensing signals induced in that electrode by the transducer at the plurality of positions, respectively.

37. The system of claim **36**, wherein the pre-determined parameterized curve is empirically derived for use with the transducer having a tip shape and the array of electrodes having an electrode configuration pattern.

38. The system of claim **36**, wherein the pre-determined parameterized curve includes one or more of a position parameter, a height parameter, and a tilt parameter.

39. The system of claim **36**, further comprising an external processor, wherein the controller and the external processor are configured to perform the fitting of at least some of the measured attributes of the plurality of sensing signals to a pre-determined parameterized curve in distributed processing.

40. A combination touch and transducer input system, comprising:

a transducer configured to generate an electric field;

an array of electrodes, and

a controller coupled to the array of electrodes, the controller being configured to:

when operating in a touch mode, determine a position of a proximate object by capacitively sensing the object with the array of electrodes; and

when operating in a transducer mode, determine a position of the transducer by measuring attributes of a plurality of sensing signals, the plurality of sensing signals being induced in the array of electrodes by the electric field generated by the transducer,

wherein the controller is further configured to determine the position of the transducer by fitting at least some of the measured attributes of the plurality of sensing signals to a pre-determined parameterized curve, the pre-determined parameterized curve including a position parameter and at least one or more of a height parameter and a tilt parameter.

41. The system of claim **40**, wherein the pre-determined parameterized curve is empirically derived for use with the transducer having a tip shape and the array of electrodes having an electrode configuration pattern.

42. The system of claim **40**, further comprising an external processor, wherein the controller and the external processor are configured to perform the fitting of at least some of the measured attributes of the plurality of sensing signals to a pre-determined parameterized curve in distributed processing.

43. A combination touch and transducer input system, comprising:

a transducer configured to generate an electric field;

an array of electrodes; and

a controller coupled to the array of electrodes, the controller being configured to:

when operating in a touch mode, determine a position of a proximate object by capacitively sensing the object with the array of electrodes; and

when operating in a transducer mode, determine a position of the transducer by measuring attributes of a plurality of sensing signals, the plurality of sensing signals being induced in the array of electrodes by the electric field generated by the transducer;

wherein the controller includes a cascoded transimpedance amplifier coupled to the array of electrodes, the cascoded transimpedance amplifier being configured to amplify the plurality of sensing signals induced by the electric field in the array of electrodes.

* * * * *