US006815903B2

(12) **United States Patent**
Nakanishi

(10) **Patent No.: US 6,815,903 B2**
(45) **Date of Patent: Nov. 9, 2004**

(54) **DISPLAY DEVICE AND ELECTRONIC APPARATUS**

(75) Inventor: **Hayato Nakanishi**, Nagano-ken (JP)

(73) Assignee: **Seiko Epson Corporation**, Tokyo (JP)

(*) Notice: Subject to any disclaimer, the term of this patent is extended or adjusted under 35 U.S.C. 154(b) by 0 days.

(21) Appl. No.: **10/315,155**

(22) Filed: **Dec. 10, 2002**

(65) **Prior Publication Data**

US 2003/0146710 A1 Aug. 7, 2003

(30) **Foreign Application Priority Data**

Dec. 11, 2001 (JP) 2001-377298

(51) **Int. Cl.**[7] **G09G 3/10**
(52) **U.S. Cl.** **315/169.3**; 313/582
(58) **Field of Search** 315/169.1, 169.4; 313/582, 588, 503, 510; 347/15, 19, 105, 106

(56) **References Cited**

U.S. PATENT DOCUMENTS

6,290,352	B1	9/2001	Marumoto et al.	347/106
6,304,670	B1	10/2001	Berestov	382/162
6,312,771	B1	11/2001	Kashiwazaki et al.	428/133
6,323,596	B1 *	11/2001	Ito et al.	313/582
6,341,862	B1	1/2002	Miyazaki et al.	347/106
6,342,321	B1	1/2002	Sakamoto et al.	430/7
6,364,450	B1	4/2002	Yamaguchi et al.	347/33
6,386,700	B1	5/2002	Akahira	347/106
6,394,578	B1	5/2002	Akahira et al.	347/43
6,646,375	B1 *	11/2003	Nagano	313/582
2003/0122495	A1 *	7/2003	Nakanishi	315/169.3

FOREIGN PATENT DOCUMENTS

EP	0 984 303 A1	3/2000
EP	1 209 744 A2	5/2002

* cited by examiner

Primary Examiner—Wilson Lee
(74) *Attorney, Agent, or Firm*—Oliff & Berridge, PLC

(57) **ABSTRACT**

The invention provides a display device and an electronic apparatus that are free from, or protected from, errors, which are specifically designed so as to have power source lines to the driving circuits and others thereof in a predetermined site of the substrate of the device and to thereby increase the effective display region of the surface of the substrate thereof. A predetermined matrix pattern is formed on a substrate, and includes a bank layer and a recess region, the recesses being spaced from each other with the banks adjacent thereto of the bank layer. A real pixel region for display and a dummy pixel region not for display are formed in the pixel region to be a display region of the substrate. A scanning line-driving circuit to control the output of scanning signals that pass through scanning lines, and a driving voltage conduction element through which driving current passes to drive the scanning line-driving circuit, are formed on the substrate. In the plan view of the substrate, the driving voltage conduction element is superimposed at least partly on the recess region of the dummy pixel region.

15 Claims, 9 Drawing Sheets

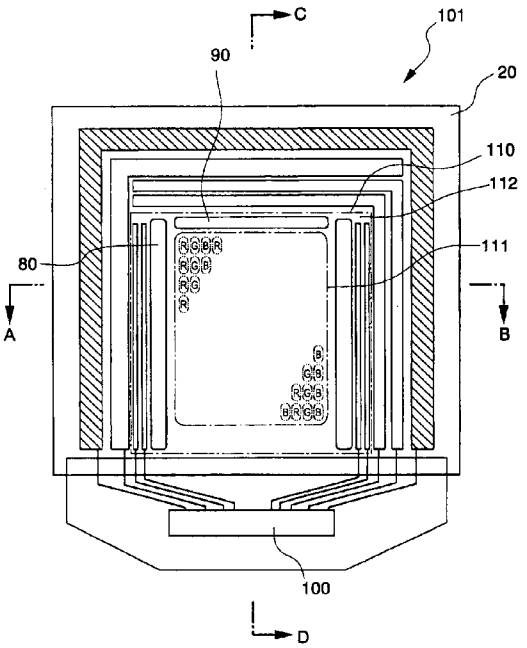

Fig. 1

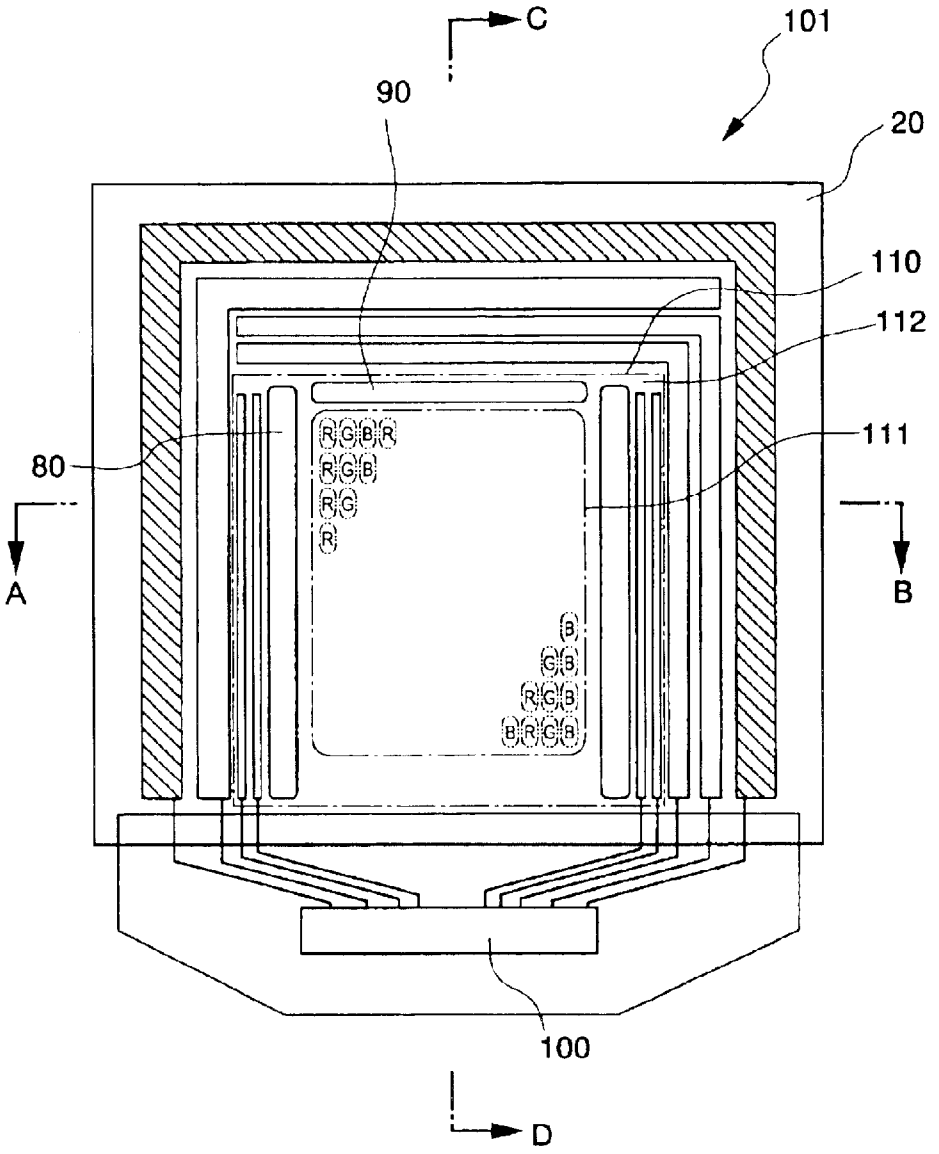

Fig. 2

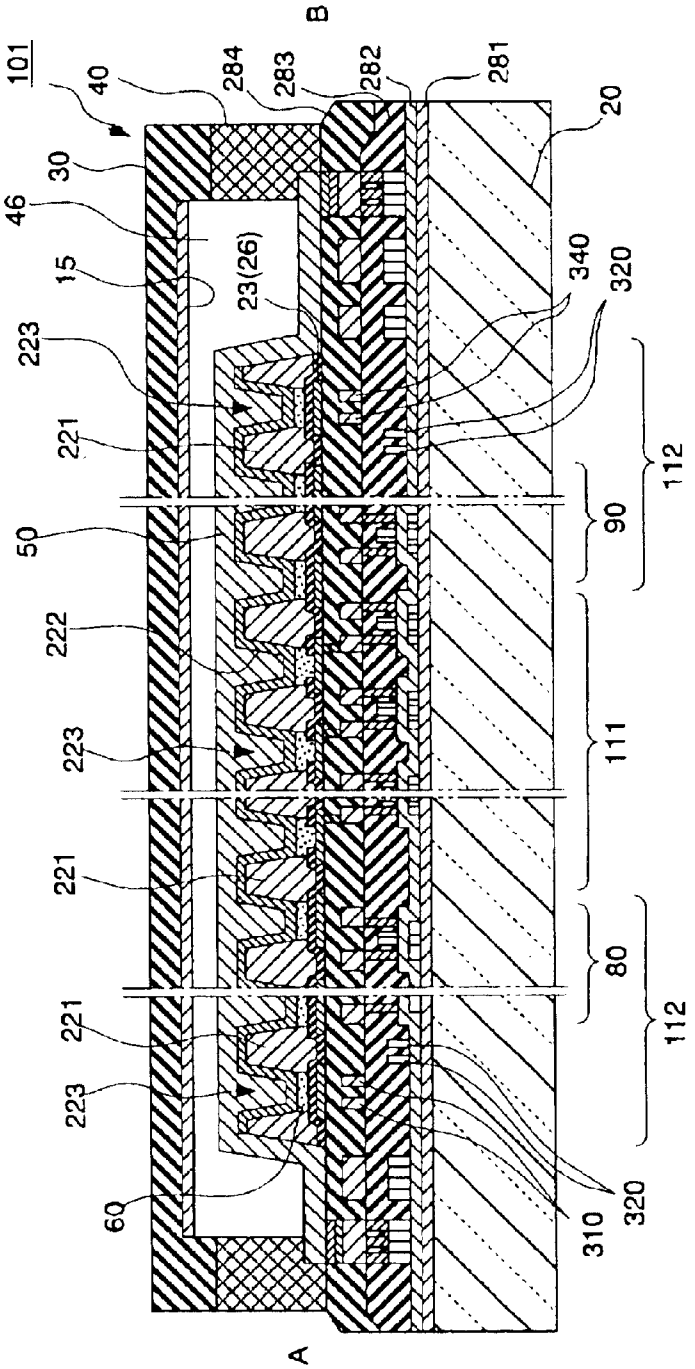
101
40
30
46
15
23(26)
223
221
50
222
223
221
221
223
60
284
283
282
281
20
340
320
112
90
111
80
112
310
320
A
B

Fig. 3

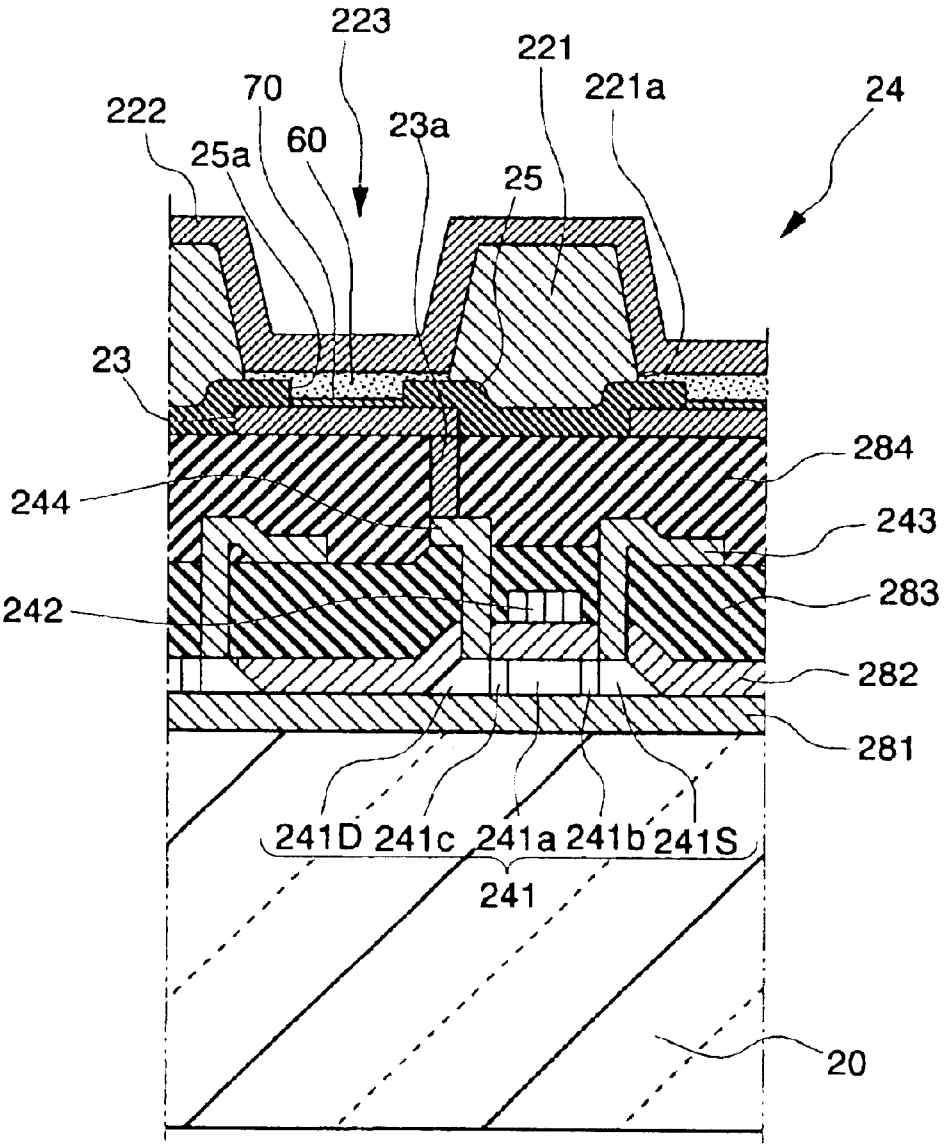
223
221
221a
24
222
70
60
23a
25a
25
23
284
244
243
283
242
282
281
241D 241c 241a 241b 241S
241
20

Fig. 4

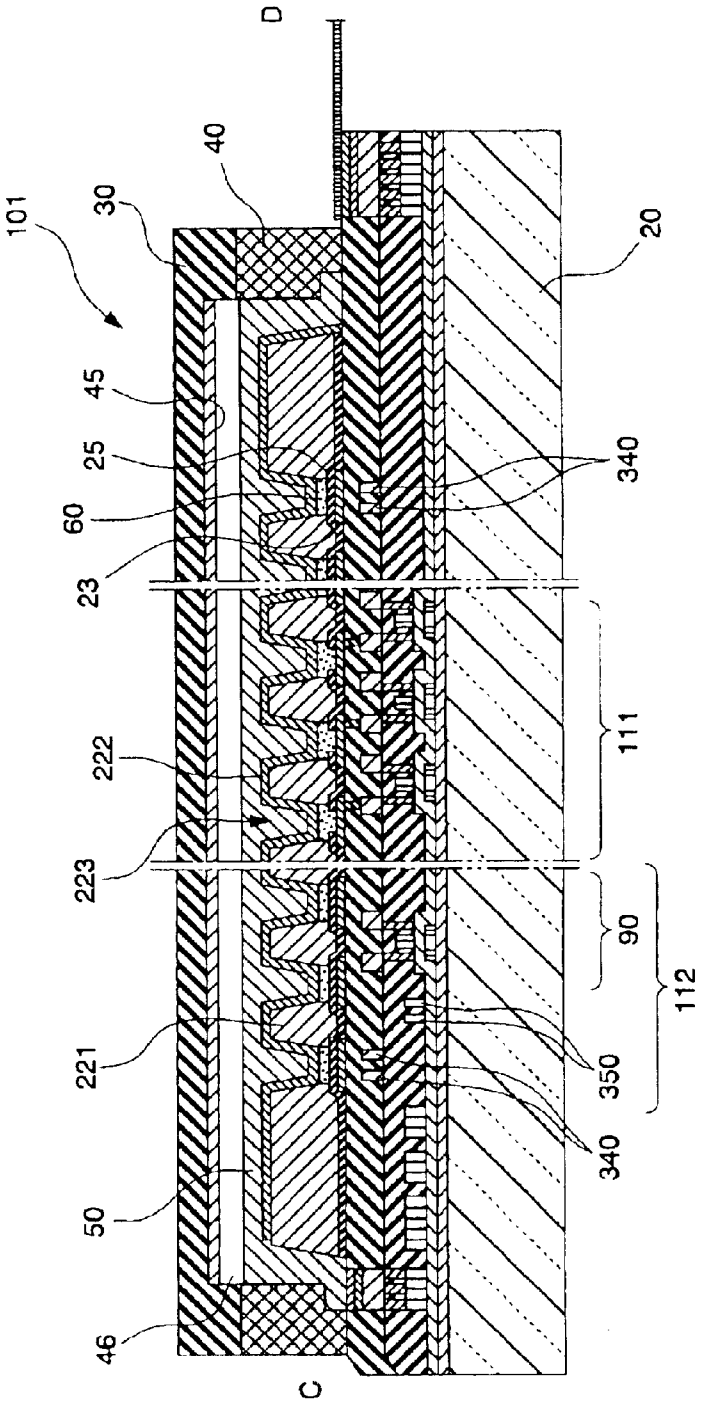

Fig. 5

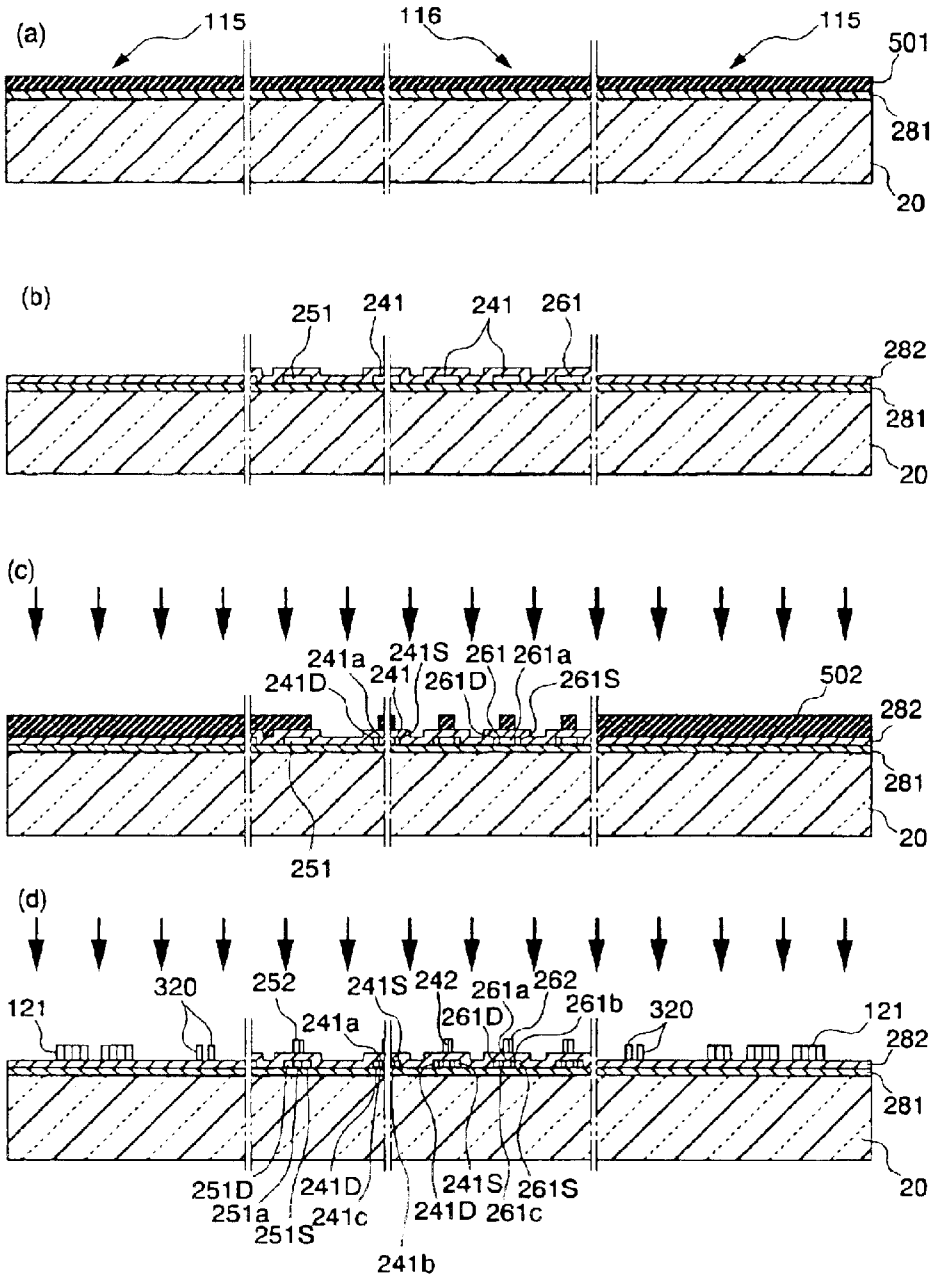
(a)
115
116
115
501
281
20
(b)
251
241
241
261
282
281
20
(c)
241a
241S
261
261a
241D
241
261D
261S
502
282
281
20
251
(d)
320
252
241S
242
261a
262
121
241a
261D
261b
320
121
282
281
20
251D
241D
241S
261S
251a
241c
241D
261c
251S
241b

Fig. 6

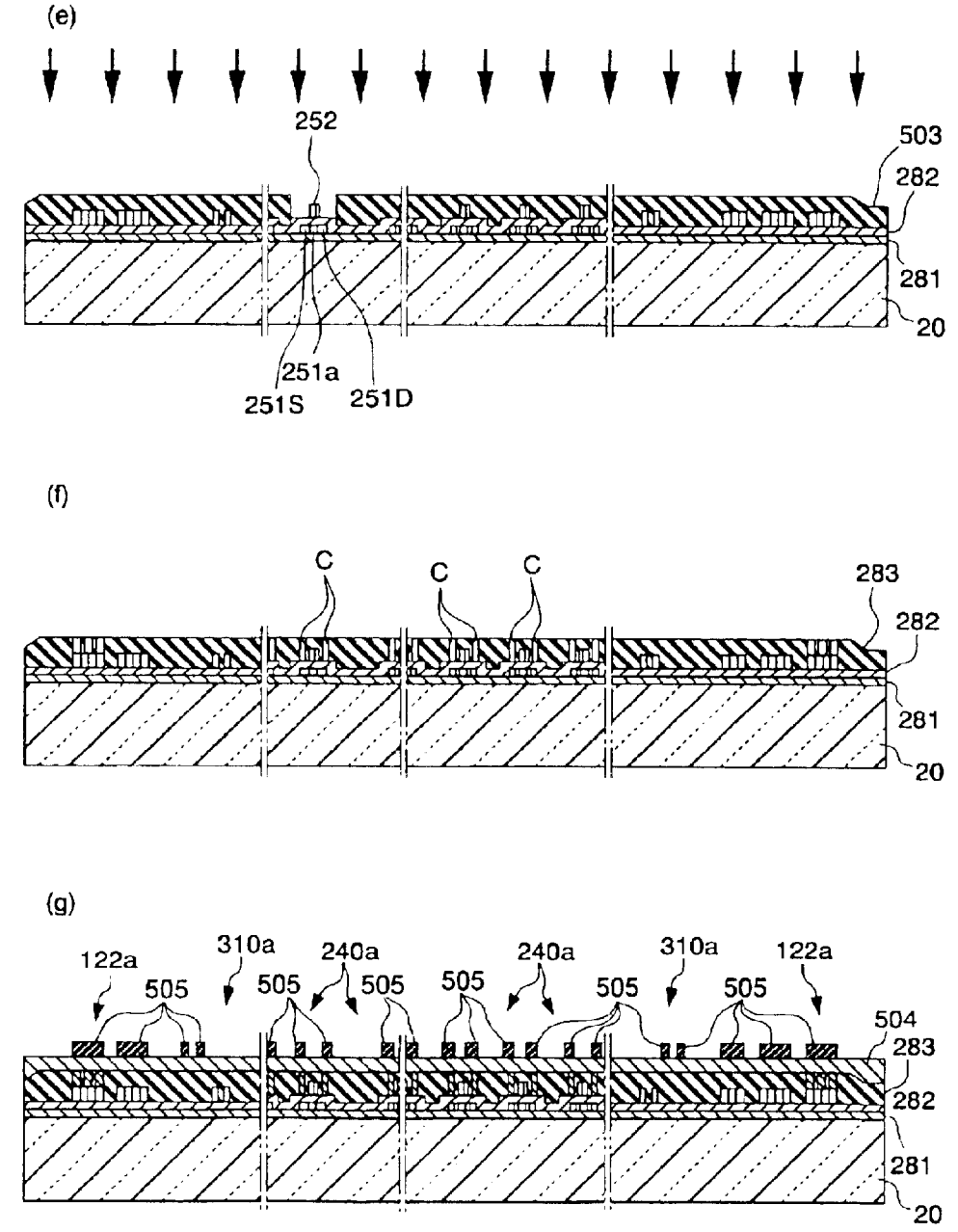
(e)
252
503
282
281
20
251a
251S
251D
(f)
C
C
C
283
282
281
20
(g)
122a
310a
240a
240a
310a
122a
505
505
505
505
505
505
504
283
282
281
20

Fig. 7

(h)

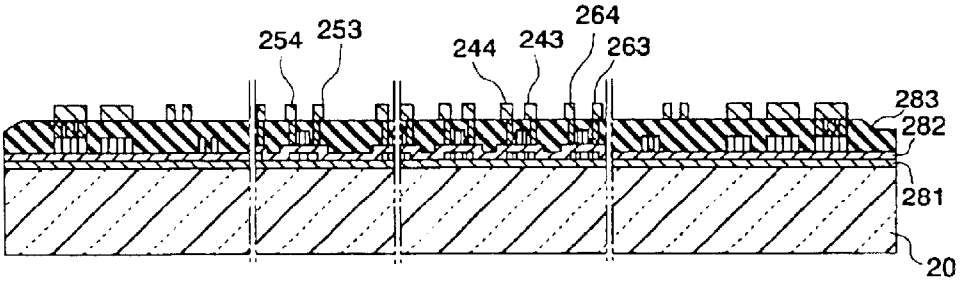
254
253
244
243
264
263
283
282
281
20

(i)

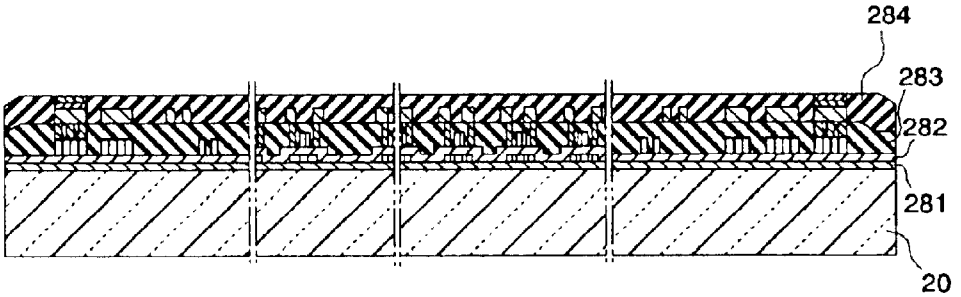
284
283
282
281
20

(j)

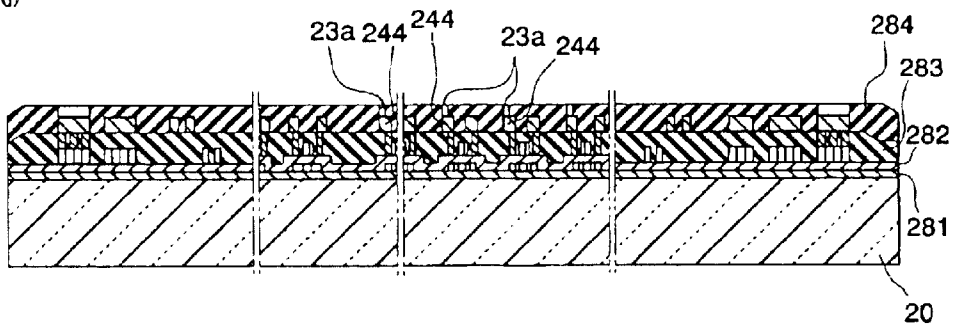
23a
244
244
23a
244
284
283
282
281
20

Fig. 8

(k)

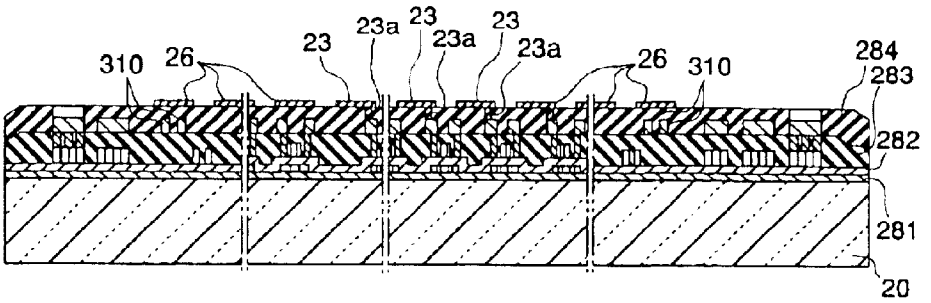
310
26
23
23a
23
23a
23
23a
26
310
284
283
282
281
20

(l)

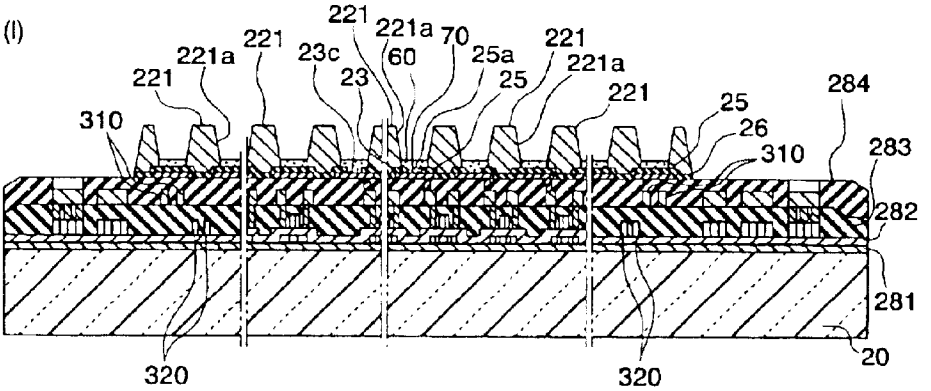
221
221a
221
23c
23
221
221a
60
70
25a
25
221
221a
221
25
26
310
284
283
282
281
20
310
320
320

(m)

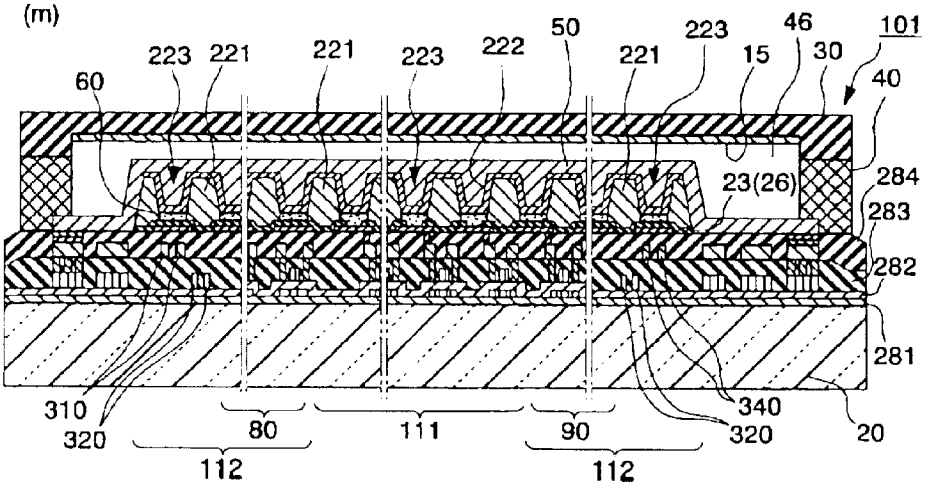
60
223
221
221
223
222
50
221
223
15
46
30
101
40
23(26)
284
283
282
281
20
310
320
80
111
90
340
320
112
112

Fig. 9

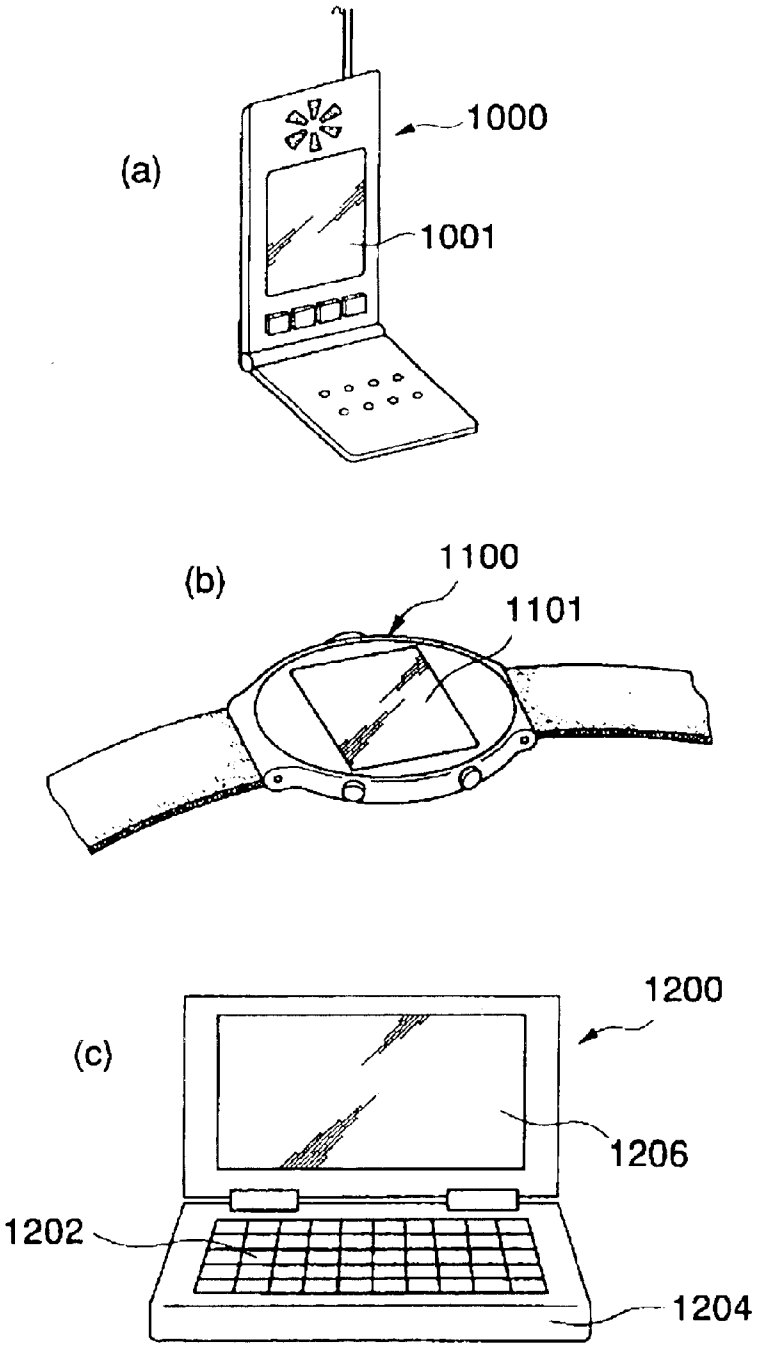

DISPLAY DEVICE AND ELECTRONIC APPARATUS

BACKGROUND OF THE INVENTION

1. Field of Invention

The invention relates to a display device and an electronic apparatus.

2. Description of Related Art

Some related art optical display devices, such as liquid-crystal display devices and EL display devices, have a layered structure of multiple circuit elements, electrodes and liquid-crystal or EL elements layered on a substrate. For example, a type of such an EL display device has a sandwich structure of a light-emitting substance-containing, light-emitting layer sandwiched between electrode layers of an anode and a cathode, in which the holes from the anode are recombined with the electrons from the cathode in the light-emitting layer having the ability of fluorescence emission. The device of the type emits light while it is not activated from its excited condition, and this is the phenomenon of the device to emit light.

A related art active matrix driving system can be used to drive the EL display device that has scanning lines aligned in rows and data lines in columns to form a matrix pattern therein and has an electrostatic capacitor element and a transistor disposed for every pixel of EL elements in the intersections of those lines. This emits light in accordance with the voltage that has been charged in the electrostatic capacitor element of every pixel while scanned for writing thereon, and keeps its light emission until the next rewriting on it.

SUMMARY OF THE INVENTION

Some display devices that are driven according the active matrix driving system as discussed above have different driving circuits, such as a driving circuit for scanning lines to impart a selected scanning pulse to every scanning line, a driving circuit for data lines to supply a specific data signal to each data line, and an inspection circuit to inspect the display devices for quality and defects during their fabrication and shipping. In such display devices, the driving circuits and/or control circuits must be mounted on their substrate, and this causes various problems in that the substrate is large-sized, and not much of the region having these circuits can be used for the display region of the devices, and the effective display region of the devices is thereby narrowed. In addition, lead lines from a predetermined supply source to the driving circuits and/or inspection circuits must also be mounted on the substrate, and these elements will further narrow the effective display region of the devices.

On the other hand, in case where the panels of such display devices are desired to be enlarged, the number of shift register stages that constitute one general constitutive component of the driving circuits and/or inspection circuits is increased. In such a case, when the devices consume a large quantity of electric power, the power voltage thereto may be lowered. If so, in addition, the supply power to the driving circuits and/or inspection circuits may also be lowered, and this will cause a problem in that the display devices may not operate correctly.

The present invention provides a display device which is free from, or is protected from, errors that may be caused by the reduction in power voltage applied thereto, and provides

an electronic apparatus equipped with such a display device. The display device of the invention provides power source lines to the driving circuits and others thereof in a predetermined site of the substrate of the device, and to thereby increase the effective display region of the surface of the substrate.

To address or solve problems noted above, the display device of the invention has, on its substrate, a display region that serves for display and a non-display resin not for display. The display region and the non-display resin are each aligned in a predetermined matrix pattern of barriers and recesses spaced from each other with the barriers adjacent thereto. The display region includes at least a first electrode layer, an essential display layer with a substance switchable for display or non-display therein and a second electrode layer that are aligned around the bottom of each recess in the recess region thereof in that order from the side of the substrate. The non-display region includes at least the essential display layer and the second electrode layer around the bottom of each recess of the recess region in that order from the side of the substrate. The substrate is provided thereon with a switch unit connected to the first electrode layer to control electric conduction to the first electrode layer, an operation control unit connected to the switch unit to control the switch unit operation, and a driving voltage conduction element to drive voltage application to the operation control unit to drive it therewith. The driving voltage conduction element is so aligned as to be at least partly in the non-display region, and in plan view of the substrate, so as to be at least partly superimposed on the recess region.

In the display device of the type, the recesses spaced from each other with the barriers adjacent thereto are aligned in a matrix pattern to form pixels. In the case where the pixels in the display device are aligned, for example, in such a matrix pattern, all of the pixels are not always in the display region (as real pixels) for display service, and instead a part of them may be in a non-display region (as dummy pixels) not for display service. The reason is due to a matter of device fabrication. For example, in case where the essential display layer is formed in the recess region, it is often difficult to make the layer have a uniform thickness, especially at the periphery of the substrate. In such a case, the recess region in which the thickness of the essential display layer formed may be uneven is made to be a non-display region to thereby cancel the display failure, due to the uneven thickness of the essential display layer. The display failure includes, for example, contract reduction, uneven display, and pixel life reduction.

Naturally, the non-display region does not substantially function for image display in the display device, and the region in the substrate is useless for display. Because of that situation, the present inventors have tried and succeeded in forming the driving voltage conduction element for the operation control unit that controls the operation of the switch unit of the device in at least the non-display region thereof for positive effective utilization of that non-display region. Accordingly, in the display device of the invention, the driving voltage conduction element substantially not in display service like the non-display region is disposed in that non-display region, and this constitution cancels out the area of the substrate not in display service, therefore making it possible to prevent or substantially prevent the display-impossible region of the substrate from increasing.

Further, the display device of the invention is so designed that its driving voltage conduction element is below the recess region in the direction of the thickness of the

substrate, or the recess region is superimposed on the driving voltage conduction element in the display direction of the device. In plan view of the substrate of this case, the driving voltage conduction element is so aligned as to be at least partly superimposed on the recess region, and a capacitor is formed between the second electrode layer and the driving voltage conduction element via an insulating layer therebetween in the non-display region. In this constitution, therefore, the capacitor may compensate for the voltage reduction at least in the driving voltage conduction element. In this structure, the bottom of each recess in the recess region runs toward the driving voltage conduction element (toward the substrate), and each recess has the second electrode layer around its bottom. Therefore, as compared with the barriers, the recesses in the recess region tend to have an increased capacitance, and their effect of compensating for the power source voltage reduction may be larger than that of capacitors superimposed on the barriers.

Accordingly, the display device of the invention reduces the area of the display-impossible region of its substrate and enlarges the area of the effective display region thereof, and it is free from, or is protected from, errors that may be caused by the reduction in power voltage applied thereto. Organic EL substances can be used for the display substance to be in the essential display layer of the display device of the invention, for example. In addition, liquid-crystal substances can also be used.

Preferably, in the display device of the invention, the barriers are so designed that adjoining two barriers are parallel to each other along the axis thereof, and the driving voltage conduction element is so designed that it includes a part formed between the neighboring barriers to be almost axially parallel to them. In this embodiment, the area of the part in which the driving voltage conduction element is superimposed on the recess region is further increased and the effective display region of the surface area of the substrate is therefore further enlarged, and the effect of this embodiment to compensate for the reduction in the power voltage to be applied to the device may be higher. Also preferably in the display device of the invention, the non-display region may be provided with a first electrode layer between the substrate and the essential display layer and with an insulating layer to block the electric conduction between the first electrode layer and the second electrode layer. In this embodiment, the insulating layer blocks the electric conduction between the electrodes in the non-display region, or makes the electric conduction therebetween in the non-display region more difficult than that in the display region. In fabricating the display device of this embodiment, the electrode layers, the essential display layer and the insulating layer of the device may be formed, for example, through photolithography. In such a case, the insulating layer is formed in the entire recess region, or it is partly opened to have an insulationdepleting layer partly therein. In this case, either the display region or the non-display region may be formed in a simplified manner.

Also preferably in the display device of the invention, the surface of the insulating layer may be formed of a material having an affinity for the essential display layer that is relatively higher than an affinity of the surface of each barrier. This embodiment is almost free from a problem that the thickness of the essential display layer may increase around the barriers, or the essential display layer may be more uniform in this embodiment. As a result, this embodiment will be almost free from a trouble of contrast reduction.

Also preferably in the display device of the invention, the substrate may be provided thereon with multiple scanning lines and multiple data lines formed to cross each other, the switch unit is connected to the scanning lines and the data lines, and the operation control unit includes a data control unit to control the signal to pass through the data lines. Apart from this, the switch unit may be connected to the scanning lines and the data lines, and the operation control unit may include a scanning control unit to control the signal to pass through the scanning lines. Needless-to-say, the operation control unit may include both the data control unit and the scanning control unit. Also preferably, the substrate may be provided thereon with multiple inspection lines, the switch unit is connected to the inspection lines, and the operation control unit includes an inspection control unit to control the signal to pass through the inspection lines. Needless-to-say, the operation control unit may include the data control unit, the scanning control unit and the inspection control unit. In these embodiments, the operation control unit is effective to more efficiently control the signals to pass through the scanning liens and/or the data lines and/or the inspection lines. In such embodiments, these scanning lines and/or data lines and/or inspection lines, and the switch unit are all mounted on the substrate, and therefore effective utilization of the surface area of the substrate for these elements is desired. Because the invention has the specific constitution of the driving voltage conduction element to drive the operation control unit therein, it satisfies the requirement of effective substrate utilization and enables stable supply of driving current to the display device.

In the case where an organic EL substance or a liquid-crystal substance is used for the display substance in the display device of the invention, the essential display layer of the display substance of such a light-emitting substance or a liquid-crystal substance may be formed for the respective pixels (in the recess region) in an inkjet process. In such an inkjet process, the non-display region may be formed in a predetermined region, for example, at the periphery of the substrate surface to prevent or substantially prevent the thickness of the essential display layer from being uneven. Accordingly, in case where the essential display layer is formed in such an inkjet process, the constitution of the invention enables effective utilization of the non-display region of the surface of the substrate.

The electronic apparatus of the invention is equipped with the above display device for the display element thereof. Exemplary electronic apparatus include, for example, mobile phones, wristwatches and various information processors such as word processors and personal computers. Most of such electronic apparatus are driven by batteries, and the constitution of the invention realizes stable power supply to them. Most of such electronic apparatus are small-sized, and the display device of the invention packaged in them enables effective utilization of their display region. Even though the electronic apparatus are smallsized as a whole, the invention ensures a relatively large display region.

BRIEF DESCRIPTION OF THE DRAWINGS

FIG. **1** is a schematic plan view of an EL display device, which is one embodiment of the display device of the invention;

FIG. **2** is a schematic cross-sectional view taken along plane A-B of FIG. **1**;

FIG. **3** is an enlarged schematic cross-sectional view showing a significant part of FIG. **2**;

FIG. **4** is a schematic cross-sectional view taken along plane C-D of FIG. **1**;

FIGS. **5**(*a*)–**5**(*d*) are schematic cross-sectional views showing one example of the fabrication process for the EL display device of FIG. **1**;

FIGS. **6**(*e*)–**6**(*g*) are schematic cross-sectional views showing the fabrication process for the EL display device, subsequently to FIGS. **5**(*a*)–**5**(*d*);

FIGS. **7**(*h*)–**7**(*j*) are schematic cross-sectional views showing the fabrication process for the EL display device, subsequently to FIGS. **6**(*e*)–**6**(*g*);

FIGS. **8**(*k*)–**8**(*m*) are schematic cross-sectional views showing the fabrication process for the EL display device, subsequently to FIGS. **7**(*h*)–**7**(*j*);

FIGS. **9**(*a*)–**9**(*c*) are schematic perspective views showing some examples of electronic apparatus of the invention.

DETAILED DESCRIPTION OF PREFERRED EMBODIMENTS

Exemplary embodiments of the invention are described hereinunder with reference to the drawings attached hereto. The exemplary embodiments demonstrate some preferred embodiments of the invention and do not whatsoever restrict the invention. The exemplary embodiments may be modified in any desired manner within the technical scope of the invention. In the drawings referred to hereinunder, the layers and the members that constitute the illustrated devices are scaled down differently from their actual scale in order to be well recognizable in the drawings.

An embodiment of the invention that is applied to an EL display device in which the electro-optical substance to form the essential display layer is an electroluminescent (EL) substance is described first. FIG. **1** and FIG. **2** are a plan view and a cross-sectional view taken along plane A-B, respectively, and schematically show the constitution of the EL display device of this embodiment. The EL display device **101** shown in FIGS. **1** and **2** is an EL display device for an active matrix system, in which a thin film transistor (TFT) is used for the switch unit.

In addition to the switch unit, (TFT which can be used to refer to TFT **24** in FIG. **3**, and to a pixel TFT) to control as to whether or not a data signal is written in the pixel electrode **23** (see FIG. **2**) therein, the EL display device **101** has, on the substrate **20**, other switch unit-driving TFT (which may be referred to as a driving circuit TFT) for the scanning line-driving circuit **80** and the inspection circuit **90**. The pixel region **110** of the display device **101** includes a real pixel region **111** for panel display and a dummy region **112** not for display, in which the dummy region **112** is formed in the area of the pixel region **110**, excluding the real pixel region **111**.

As shown in FIG. **2**, the EL display device **101** is so designed that the active matrix substrate **20** is stuck to the opposite seal substrate (opposite substrate) **30** with a sealant resin **40** therebetween, a desiccant **45** is in the region surrounded by the two substrates **20**, **30** and the sealant resin **40**, and the space between the two substrates **20**, **30** is filled with N_2 gas to form an N_2 gas layer **46**. A layer **222** to facilitate electron injection of, for example, calcium and a cathode **50**, via an anode (pixel electrode) **23**, a hole injection/transport layer **70** (see FIG. **3**) capable of injecting/transporting holes from the anode (pixel electrode) **23** and a layer **60** of an organic EL substance, a type of electro-optical substance (hereinafter referred to as a light-emitting layer or an organic EL layer), for example, in a mode of vapor deposition or the like, are formed on the active matrix substrate **20**. A light-transmitting insulating plate of, for example, glass, quartz or plastics can be used for the active matrix substrate **20** and the seal substrate (opposite substrate) **30**.

The scanning line-driving circuit **80** to drive the pixel TFT **24** (see FIG. **3**) is mounted on the active matrix substrate **20**. On the other hand, a data line-driving circuit **100** is attached thereto, as a data driver IC mounted on a different substrate. Needless-to-say, the data line-driving circuit **100** may be mounted on the active matrix substrate **20**.

The inspection circuit **90** monitors the operation of the display device **101**, and this is equipped with, for example, an information output unit to output the monitored result to an outer device connected to the device **101**.

The scanning line-driving circuit **80** and the data line-driving circuit **100** are formed to be a scanning control unit and a data control unit, respectively, to control the signal output to the scanning lines and the data lines in the device **101**, in which the scanning lines and the data lines are connected to the pixel TFT **24** (see FIG. **3**). Accordingly, based on the operation control signal from the scanning line-driving circuit **80** and the data line-driving circuit **100**, the pixel TFT **24** (see FIG. **3**) operates to electrically control the pixel electrode **23**.

The scanning line-driving circuit **80** and the inspection circuit **90** receive driving voltage from a predetermined power source via a driving voltage conduction element **310** (see FIG. **2**) and a driving voltage conduction element **340** (see FIG. **4**). The scanning line-driving circuit **80** and the inspection circuit **90** receive drive control signals and driving voltage from a predetermined main driver or the like that controls the operation of the display device **101**, via a drive control signal conduction element **320** (see FIG. **2**) and a drive control signal conduction element **350** (see FIG. **4**). The drive control signals from the main driver or the like control the scanning line-driving circuit **80** and the inspection circuit **90** that output their signals.

FIG. **3** is a cross-sectional view showing the constitution of the TFT (pixel TFT) **24** and thereabout aligned in accordance with the real pixel region **111** of the display region in the display device. As illustrated therein, the surface of the active matrix substrate **20** is coated with an under layer-protecting layer **281** of essentially SiO_2, on which is formed a silicon layer **241**. The surface of the silicon layer **241** is covered with a gage-insulating layer **282** of essentially SiO_2 and/or SiN. Of the silicon layer **241**, the area that overlaps with a gate electrode **242** via the gate-insulating layer **282** therebetween is a channel region **241***a*. The gate electrode **242** is a part of the scanning lines in the device. On the other hand, the surface of the gate-insulating layer **282**, which covers the silicon layer **241** and on which is formed the gate electrode **242**, is coated with a first insulating interlayer **283** of essentially SiO_2. In this description, "essential" indicates the component that is provided in such a quantity so as to constitute the highest content in the element.

Of the silicon layer **241**, the channel region **241***a* on the source side is adjacent to a low-concentration source region **241***b* and a high-concentration source region **241**S, while the channel region **241***a* on the drain side is to a low-concentration drain region **241***c* and a high-concentration drain region **241**D. Having these adjacent thereto, the channel region **241***a* forms an LDD (light-doped drain) structure. Of these, the high-concentration source region **241**S is connected to a source electrode **243** via a contact hole that runs through the gate-insulating layer **282** and the first insulating interlayer **283**. The source electrode **243** forms a part of the data lines (that extend in the direction perpendicular to FIG. **3**). On the other hand, the high-concentration drain region **241**D is connected to a drain electrode **244** via a contact hole that runs through the gate-insulating layer **282**

and the first insulating interlayer **283**. The source electrode **243** and the drain electrode **244** are made of the same material.

The first insulating interlayer **283**, in which are formed the source electrode **243** and the drain electrode **244**, is covered with a second insulating interlayer **284** of essentially a resin component, such as an acrylic resin. Apart from such an acrylic resin, the second insulating interlayer **284** may also be formed of SiN or SiO_2, for example.

A pixel electrode **23** of ITO is formed on the surface of the second insulating interlayer **284**, and it is connected to the drain electrode **244** via a contact hole **23***a* that runs through the second insulating interlayer **284**. Accordingly, the pixel electrode **23** is connected to the high-concentration drain electrode **241**D of the silicon layer **241**, via the drain electrode **244**.

TFT (driving circuit TFT) in the scanning line-driving circuit **80** and the inspection circuit **90**, for example, the N-channel type or P-channel type TFT in these driving circuits to constitute the inverter in a shift register, has the same constitution as that of the TFT **24**, except that it is not connected to the pixel electrode **23**.

The surface of the second insulating interlayer **284**, on which is formed the pixel electrode **23**, is coated with a hydrophilic control layer **25** of, for example, essentially SiO_2, and further with an organic bank layer **221** of, for example, an acrylic or polyimide resin. A hole injection/transport layer **70** and an organic EL layer **60** are layered in that order on the pixel electrode **23** in the area inside the opening **25***a* formed through the hydrophilic control layer **25** and inside the opening **221***a* formed adjacent to the organic bank layer **221**.

The hole injection/transport layer **70** and the organic EL layer **60** are covered with a cathode **50** formed by laminating Ca **222**, Al, for example. Having the basic constitution as above, the EL display device **101** is sealed up with the seal substrate **30** and contains the desiccant **45** therein, and its life is thereby prolonged, as shown in FIG. **2**.

As shown in FIG. **2**, in the display device **101** of this embodiment illustrated, the driving voltage conduction element **310** on the side of the scanning lines is formed in the dummy region **112**, specifically below the recesses in the recess region **223** that are spaced from each other with the organic bank layers **221** adjacent thereto. Accordingly, the driving voltage conduction element **310** on the side of the scanning lines is aligned at a location not below the organic bank layers **221**. In the plan view of the display device **101** or the substrate **20**, the driving voltage conduction element **310** is so aligned as to at least overlap with the recesses in the recess region **223** of the dummy region **112**.

In this constitution, the dummy region **112** is a non-display region not for display, and the non-display region is made to overlap with the driving voltage conduction element **310** having no substantial display function. Specifically, as in FIG. **2**, these elements are superimposed on each other in the direction of display service of the device. Having this specific constitution, the display device of this embodiment ensures effective utilization of the non-display pixel region. The cathode **50**, the layer **222**, the hydrophilic control layer **25**, the insulating layer **284** and the power source line (driving voltage conduction element) **310** are formed in the recess region **223**, in that order from the top, and the distance between the power source line and the cathode is thereby narrowed, as compared with a different case where these elements are formed in the barrier region. Accordingly, the capacitance between the power source line and the cathode can be kept large in this constitution, in which, therefore, even when the voltage in the power source line is lowered, the capacitance can compensate for the power reduction. The advantage thereof is that the display device having this constitution is free from, or is protected from, operation failure, such as errors that may be caused by driving voltage reduction.

The drive control signal conduction element on the side of the scanning lines (circuit control signal lines) **320** is formed in the dummy pixel region **112**, specifically below the organic bank layer **221**. Specifically, the drive control signal conduction element on the side of the scanning lines **320** is formed in accordance with the organic bank layer **221**, and in the plan view of the display device **101** or the substrate **20**, the element **320** is so aligned as to at least overlap with the organic bank layer **221** in the dummy pixel region **112**.

In this constitution, the dummy region **112** is a non-display pixel region not for display, and the non-display pixel region is made to overlap with the drive control signal conduction element **320** having no substantial display function, in the direction of display service of the device. Having this specific constitution, the display device of this embodiment ensures effective utilization of the non-display pixel region. In addition, since the drive control signal conduction element **320** is formed below the organic bank layer **221** to overlap with it in the plan view of the device, the distance between the drive control signal conduction element **320** and the cathode **222** is relatively enlarged, as compared with a different case where the element **320** is formed below the recess region **223**. Thus, a capacitor of high capacitance is hardly formed in the distance between these elements, and therefore the influence of the cathode on the signal that passes through the drive control signal conduction element **320** is reduced. In this connection, if a capacitor of high capacitance is formed between the element **320** and the cathode, it will cause some problems, in that the wave of the pulse signal that passes through the drive control signal conduction element **320** may be unsharpened. In this embodiment, however, the drive control signal conduction element **50** is disposed in the site that hardly has a high capacitance, and is therefore free from, or is protected from, such failure.

FIG. **4** is a cross-sectional view taken along plane C-D of FIG. **1**. As illustrated therein, the driving voltage conduction element **340** on the side of the inspection circuit, which is to drive the inspection circuit **90**, is in the dummy region **112**, and specifically below the recesses in the region **223** that are spaced from each other with the organic bank layers **221** adjacent thereto, or it is superimposed on the recess region **223** in the plan view of the device. In addition, the drive control signal conduction element **350** on the side of the data lines is also in the dummy region **112**, and specifically below the organic bank layer **221**, or it is superimposed on the organic bank layer **221** in the plan view of the device. Accordingly, like that of the driving voltage conduction element **310** and the drive control signal conduction element **320** on the side of the scanning lines mentioned above, this constitution enables effective utilization of the dummy region **112** with no substantial display function, and enables stable supply of driving current to the inspection circuit **90** and stable transmittance of data signals thereto. In the case where the data line-driving circuit **100** is formed on the same substrate **20**, the driving voltage conduction element and the drive control signal conduction element for it may also be formed below the recess region **223** and the organic bank layer **221**, respectively, in the dummy region **112**, like in the above structure, and this constitution enjoys the same advantages as above.

One example of the process for fabricating the display device **101** of this embodiment is described below.

FIGS. **5**(*a*) to **8**(*m*) show an exemplary process for fabricating the display device **101**, especially the process of mounting the constitutive components on the active matrix substrate **20**. The cross-sectional views of FIGS. **5**(*a*) to **8**(*m*) correspond to the cross-sectional view taken along plane A-B of FIG. **1** having the scanning line-driving circuit **80** formed therein, especially to the cross-section **115** of the area in which the dummy region **112** is to be formed (see FIG. **5**(*a*)) and to the cross-section **116** of the area in which the real pixel **111** (TFT **24**) is to be formed (see FIG. **5**(*a*)). In the following description, the impurity concentration is in terms of the concentration of the impurity having been annealed for activation.

As shown in FIG. **5**(*a*), an under layer-protecting layer **281** of a silicon oxide film or the like is formed on the surface of the active matrix substrate **20** which is an insulating substrate of quartz, glass or the like.

Next, an amorphous silicon layer **501** is formed thereon through ICVD or plasma CVD, and the crystal grains therein are grown through laser annealing or rapid heating to provide a polysilicon layer.

Next, as shown in FIG. **5**(*b*), the polysilicon layer is patterned through photolithography to form island silicon layers **241**, **251** and **261**. Of these layers, the silicon layer **241** is in the display region and forms a TFT (pixel TFT) **24** to be connected to a pixel electrode **23**; and the silicon layers **251** and **261** form P-channel type and N-channel type TFTs (driving circuit TFTs), respectively, to be in the scanning line-driving circuit **80**.

Next, a gate-insulating layer **282** of a silicon oxide film having a thickness of approximately from 30 nm to 200 nm is formed on the overall surface of the silicon layer through plasma CVD or thermal oxidation, as shown in FIG. **5**(*b*). In case where the gate-insulating layer **282** is formed through thermal oxidation, the silicon layers **241**, **251** and **261** are crystallized at the same time, and these silicon layers may be polysilicon layers. For channel doping, for example, boron ions of a dose of about 1×10^{12} cm^{-2} are implanted at that timing. As a result, the silicon layers **241**, **251** and **261** become low-concentration P-type silicon layers having an impurity concentration of about 1×10^{17} cm^{-3}.

Next, a mask for selective ion implantation is formed on a part of the channel layers of P-channel type TFT and the N-channel type TFT, and in that condition, phosphorus ions of a dose of about 1×10^{5} cm^{-2} are implanted thereto. As a result, the high-concentration impurity is introduced into the necessary part of the layers in a self-aligned manner relative to the patterning mask, thereby forming high-concentration source regions **241**S and **261**S and high-concentration drain regions **241**D and **261**D in each of the silicon layers **241** and **261**, as shown in FIG. **5**(*c*).

Next, a gate electrode-forming conductive layer **502** of a doped silicon or silicide film or a metal film of aluminium, chromium or tantalum, is formed on the overall surface of the gate-insulating layer **282**, as shown in FIG. **5**(*c*). The thickness of the conductive layer **502** is approximately 500 nm or so. Next, this layer is patterned to form a gate electrode **252** to provide the P-channel type driving circuit TFT, a gate electrode **242** to provide the pixel TFT, and a gate electrode **262** to provide the N-channel type driving circuit TFT, as shown in FIG. **5**(*d*). In this step, the drive control signal conduction element **320** (**350**) and the first layer **121** of the cathode power source line are also formed at the same time. In this case, the drive control signal conduction element **320** (**350**) is formed in the dummy region **112**.

Next, phosphorus ions of a dose of about 4×10^{13} cm^{-2} are implanted into the silicon layers **241**, **251** and **261**, via the gate electrodes **242**, **252** and **262** that serve as a mask, as shown in FIG. **5**(*d*). As a result, the low-concentration impurity is implanted into these silicon layers in a self-aligned manner relative to the gate electrodes **242**, **252** and **262**, to thereby form low-concentration source regions **241***b* and **261***b* and low-concentration drain regions **241***c* and **261***c* in the silicon layers **241** and **261**, as shown in FIGS. **5**(*c*) and **5**(*d*). In addition, low-concentration impurity regions **251**S and **251**D are also formed in the silicon layer **251**.

Next, a mask **503** for selective ion implantation is formed to cover the area except the P-channel type driving circuit TFT **252**, as shown in FIG. **6**(*e*). Via the mask **503** for selective ion implantation, boron ions of a dose of about 1.5×10^{15} cm^{-2} are implanted into the silicon layer **251**. In this step, the gate electrode **252** to form the P-channel type driving circuit TFT also serves as a mask, and the high-concentration impurity is doped into the silicon layer **252** in a self-aligned manner. Accordingly, the parts **251**S and **251**D of the layer **251** are counter-doped to be a source region and a drain region for the P-channel type driving circuit TFT.

Next, a first insulating interlayer **283** is formed on the overall surface of the active matrix substrate **20**, and this element is patterned through photolithography to form contact holes C in the site corresponding to the source electrode and the drain electrode of each TFT, as shown in FIG. **6**(*f*).

Next, a conductive layer **504** of a metal, such as aluminium, chromium or tantalum, is formed to cover the first insulating interlayer **283**, as shown in FIG. **6**(g). The thickness of the conductive layer **504** is approximately from 200 nm to 800 nm or so. After this, a patterning mask **505** is formed to cover the region **240***a* of the conductive layer **504** which is to form the source electrode and the drain electrode of each TFT, the region **310***a* thereof which is to form the driving voltage conduction element **310** (**340**), and the region **122***a* thereof which is to form the second layer of the cathode power source line, and in that condition, the conductive layer **504** is patterned via the mask to thereby form the source electrodes **243**, **253** and **263** and the drain electrodes **244**, **254** and **264**, as shown in FIG. **7**(*h*).

Next, a second insulating interlayer **284** is formed of a resin material, such as an acrylic resin, to cover the first insulating interlayer **283** having those electrodes formed thereon, as shown in FIG. **7**(*i*). Preferably, the second insulating interlayer **284** is formed to have a thickness of approximately from 1 to 2 μm or so. If desired, the second insulating interlayer may be formed of SiN or SiO_2. Preferably, the thickness of the SiN layer is 200 nm, and the thickness of the SiO2 layer is 800 nm.

Next, the part of the second insulating interlayer **284** that corresponds to the drain electrode **244** for pixel TFT is etched away to form a contact hole **23***a,* as shown in FIG. **7**(*j*).

After this, a thin film of a transparent electrode material, such as ITO, is formed to cover the overall surface of the active matrix substrate **20**. Then, the thin film is patterned to form a pixel electrode **23** that communicates with the drain electrode **244** via the contact hole **23***a* of the second insulating interlayer **284**, and at the same time, a dummy pattern **26** for the dummy region is also formed, as shown in FIG. **8**(*k*). (In FIG. **2**, the pixel electrode **23** generically includes those pixel electrode **23** and dummy pattern **26**.) The dummy pattern **26** is so designed that it is not connected to the underlying metal line via the second insulating interlayer

284. Specifically, the dummy pattern **26** is formed as islands, and its shape is almost the same as that of the pattern of the pixel electrode **23** formed in the display region. Needless-to-say, the shape of the dummy pattern **26** may differ from that of the pattern of the pixel electrode **23** formed in the display region. In this case, the dummy pattern **26** shall include at least the components positioned above the driving voltage conduction element **310** (**340**).

Next, an insulating layer of a hydrophilic control layer **25** is formed on the pixel electrode **23**, the dummy pattern **26** and the second insulating interlayer, as shown in FIG. **8**(*l*). On the pixel electrode **23**, the insulating layer (hydrophilic control layer) **25** is so designed that it is partly open, and the opening **25***a* of the layer **25** (in this connection, see also FIG. **3**) enables hole transfer from the pixel electrode **23** through it. Contrary to this, in the dummy pattern **26** not having such an opening **25***a*, the insulating layer (hydrophilic control layer) **25** acts as a hole transfer-blocking layer, and no hole runs through it.

Next, an organic bank layer **221** is formed to cover a predetermined part of the insulating layer (hydrophilic control layer) **25**. One specific method of forming the organic bank layer includes dissolving a resist, such as acrylic resin or polyimide resin, in a solvent and applying the resulting solution to the layer **25** in a mode of, for example, spin coating or dipping, to form the intended organic layer. The material to form the organic layer may be any and every one that does not dissolve in the solvent of ink mentioned below and capable of being readily etched to form the intended pattern. Next, the organic layer is etched through photolithography or the like to form the openings **221***a* for banks, and the organic bank layer (barrier) **221** surrounded by a wall surface is formed in every opening **221***a*. Also in this case, the organic bank layer **221** shall include at least the components positioned above the drive control signal conduction element **320** (**350**).

Next, an ink-philic region and an ink-repellent region are formed in the surface of the organic bank layer **221**. In this embodiment, the two regions are formed through plasma treatment. Specifically, the plasma treatment includes a pre-heating step, a step of ink-philication to make the top face of the bank **221**, the side wall face of the opening **221***a*, the electrode face **23***c* of the pixel electrode **23** (that is, the face of the pixel electrode) and the top face of the insulating layer (hydrophilic control layer) **25** ink-philic, a step of ink-repellency treatment to make the top face of the organic bank layer and the side wall face of the opening ink-repellent, and a cooling step.

More specifically, the substrate (substrate **20** having the bank and other components formed thereon) is heated at a predetermined temperature (e.g., at 70 to 80° C. or so), then it is subjected to plasma treatment in air in which oxygen serves as a reaction gas (O_2 plasma treatment). The latter step is the step for ink-philication. Next, it is subjected to plasma treatment in air, using tetrafluoromethane as a reaction gas (CF_4 plasma treatment). This is the step for ink-repellency treatment. Finally, the substrate having been heated through the plasma treatment is cooled. Thus processed, the substrate becomes partly inkphilic and ink-repellent in predetermined different sites thereof. The CF_4 plasma treatment will have some influence on the electrode face **23***c* of the pixel electrode **23** and on the insulating layer (hydrophilic control layer) **25**. However, since the material of the pixel electrode **23**, ITO (indium tin oxide), and the constitutive material of the insulating layer (hydrophilic control layer) **25**, SiO_2 or TiO_2 both have a low affinity for fluorine, the hydroxyl group given to them in the previous step of ink-philication is not substituted with a fluorine group through the CF_4 plasma treatment, and therefore the pixel electrode **23** and the insulating layer **25** still remain ink-philic, even after the treatment.

Next, it is processed to form a hole injection/transport layer **70** in the next step of forming the hole injection/transport layer, as shown in FIG. **8**(*l*) (in this connection, see also FIG. **3**). In the hole injection/transport layer-forming step, an ink composition that contains a hole injection/transport layer material is jetted out onto the electrode surface **23***c* in an inkjet process, and then it is dried and heated to form the hole injection/transport layer **70** on the electrode **23**. In and after this hole injection/transport layer-forming step, it is desirable that the substrate, with the components formed thereon, is processed in an inert gas atmosphere of, for example, nitrogen or argon to prevent the hole injection/transport layer **70** and the light-emitting layer (organic EL layer) **60** formed thereon from being oxidized. For example, an ink composition that contains a hole injection/transport layer material is filled into an inkjet head (not shown), the jet nozzle of the inkjet head is directed toward the electrode face **23***c* in the opening **25***a* formed in the insulating layer (hydrophilic control layer) **25**, and in that condition, ink drops are jetted out onto the electrode face **23***c* through the jet nozzle while the inkjet head and the substrate (substrate **20**) are relatively moved. In this step, the amount of one ink drop to be jetted out through the jet nozzle is predetermined. Next, the thus jetted-out ink drops are dried to remove the polar solvent from the ink composition to thereby form the intended hole injection/transport layer **70** (see FIG. **8**(*l*) and FIG. **3**).

The ink composition may be prepared by dissolving a mixture of a polythiophene derivative, such as polyoxyethylene-dioxythiophene and polystyrenesulfonic acid, or the like, in a polar solvent, such as isopropyl alcohol. The ink drops thus jetted out onto the ink-philicated electrode surface **23***c* spread thereon to fill the opening **25***a* of the insulating layer (hydrophilic control layer) **25**. On the other hand, the top face of the organic bank layer **221**, having been subjected to the ink-repellency treatment, repels the ink drops and does not receive them. Accordingly, even if the ink drops are jetted out onto the top face of the organic bank layer **221**, occasionally shifted from the predetermined site onto which they are to be jetted out, the top face of the layer **221** is not wetted with the ink drops and the ink drops repelled by it shall move into the opening **25**a of the insulating layer (hydrophilic control layer) **25**.

Next, a light-emitting layer (organic EL layer) **60** (for this, also refer to FIG. **3**) is formed on this structure in the next step of forming the light-emitting layer, as shown in FIG. **8**(*l*). In the step of forming the light-emitting layer, an ink composition that contains a light-emitting layer material is jetted out onto the hole injection/transfer layer **70** like in the above-mentioned inkjet process, and then this structure is dried and heated to form the intended light-emitting layer **60** in the opening **221***a* formed in the organic bank layer **221**.

In the step of forming the light-emitting layer, the solvent for the ink composition to provide the light-emitting layer is a non-polar solvent that does not dissolve the hole injection/transport layer **70**, to prevent the layer **70** from being re-dissolved in the composition. On the other hand, however, the hole injection/transport layer **70** is poorly wettable with such a non-polar solvent, and therefore, even though the ink composition that contains such a non-polar solvent is jetted out onto the hole injection/transport layer **70**, the layer **70** may repel the ink composition for the light-emitting layer, and as a result, the light-emitting layer

60 formed could not firmly adhere to the underlying hole injection/transport layer **70**. In addition, the light-emitting layer **60** could not be uniformly formed on the layer **70**. Therefore, to increase the wettability of the surface of the hole injection/transport layer **70** with a non-polar solvent, the layer **70** is preferably subjected to surface modification before the light-emitting layer is formed thereon. The surface modification may be attained, for example, by applying a solvent that is the same as, or similar to, the non-polar solvent onto the hole injection/transfer layer **70** in a mode of inkjetting, spin coating, dipping or the like, followed by drying the thus-coated surface of the layer **70**. The solvent for such surface modification includes, for example, cyclohexylbenzene, dihydrobenzofuran, trimethylbenzene and tetramethylbenzene, that fall in the scope of the non-polar solvent to be in the ink composition, and toluene and xylene that fall in the scope of a solvent similar to the non-polar solvent.

The surface modification step is then followed by the next step of forming the light-emitting layer in a mode of inkjetting, like in the previous step. Specifically, for example, an ink composition that contains a material for a blue(B)-emitting layer is filled into an inkjet head (not shown), then the jet nozzle of the inkjet head is directed toward the hole injection/transport layer **70** in the opening **25***a* of the insulating layer (hydrophilic control layer) **25**, and in that condition, ink drops are jetted out onto the hole injection/transport layer **70** through the jet nozzle while the inkjet head and the substrate are relatively moved. In this step, the amount of one ink drop to be jetted out through the jet nozzle is predetermined.

The light-emitting material to form the light-emitting layer **60** includes, for example, fluorenone-based polymer derivatives, (poly)paraphenylene-vinylene derivatives, polyphenylene derivatives, polyfluorene derivatives, polyvinylcarbazoles, polythiophene derivatives, perylene dyes, coumarin dyes, rhodamine dyes, as well as low-molecular organic EL materials and high-molecular organic EL materials soluble in benzene derivatives. Specifically, rubrene, perylene, 9,10-diphenylanthracene, tetraphenylbutadiene, Nail Red, Coumarin 6, quinacridone and others are employable herein. On the other hand, the non-polar solvent for the ink composition is preferably one that does not dissolve the hole injection/transport layer **70**. For example, it includes cyclohexylbenzene, dihydrobenzofuran, trimethylbenzene and tetramethylbenzene.

Thus jetted out thereonto, the ink drops spread on the hole injection/transport layer **70** to fill the opening **25***a* of the hydrophilic control layer **25**. On the other hand, the top face of the organic bank layer **221**, having been subjected to the ink-repellency treatment, repels the ink drops and does not receive them. Accordingly, even if the ink drops are jetted out onto the top face of the organic bank layer **221**, occasionally shifted from the predetermined site onto which they are to be jetted out, the top face of the layer **221** is not wetted with the ink drops and the ink drops repelled by it shall move into the opening **25***a* of the hydrophilic control layer **25** and into the opening **221***a* of the organic bank layer **221**. Next, the ink drops, thus having been jetted out to be in these openings, are dried to remove the non-polar solvent from the ink composition to thereby form the intended blue-emitting layer (light-emitting layer **60**).

Like the blue-emitting layer, for example, a red-emitting layer (light-emitting layer **60**) is then formed, and a green-emitting layer (light-emitting layer **60**) is finally formed. Regarding the order of forming the light-emitting layers **60** of different colors, it is desirable that the layers for which the number of the constitutive components of the material is smaller are formed earlier than the others for which the number of the constitutive components of the material is larger. If not, or if the light-emitting layers for which the number of the constitutive components of the material is larger are formed earlier than the others for which the number of the constitutive components of the material is smaller, it is undesirable since the solvent vapor from the ink compositions of the light-emitting layers of different colors formed later will re-dissolve the light-emitting layers having been formed earlier to cause component separation in the thus-formed layers.

The hole injection/transport layer and the light-emitting layer are formed according to such an inkjet process, in which the tilt angle of the inkjet head to be used shall be controlled in accordance with the pitch of the light-emitting dots. This is because the nozzle pitch of the inkjet head does not always correspond to the pitch of the light-emitting dots to be formed, and therefore the head is appropriately tilted so that it may well correspond to the pitch of the light-emitting dots to be formed.

Next, cathodes **222**, **50** are formed in the subsequent cathode-forming step as in FIG. **8**(*m*). In the cathode-forming step, a lower cathode layer and an upper cathode layers are formed in order on the overall surface of the light-emitting layer **60** and the organic bank layer **221** to be the cathodes **222**, **50** thereon. Preferably, the work function of the material for the lower cathode layer is relatively smaller than that of the upper cathode layer. For example, the material for the cathodes may be lithium fluoride, calcium or aluminium. The upper cathode layer protects the lower cathode layer, and it is desirable that the work function of its material is relatively larger than that of the material for the lower cathode layer. Preferably, these layers are formed, for example, through vapor deposition, sputtering or CVD. Especially preferred for these, is vapor deposition that does not cause thermal damage of the underlying light-emitting layer **60**. In FIGS. **8**(*k*)–**8**(*m*), **222** indicates calcium (lower cathode layer), and **50** indicates aluminium (upper cathode layer). Apart from Al, Ag film, Mg/Ag laminate film, etc., may also be used.

Finally, the substrate with the components formed thereon is sealed up with a seal substrate **30** in the sealing step, as shown in FIG. **8**(*m*). In the sealing step, the seal substrate **30** and the active matrix substrate **20** are sealed up with an adhesive **40**, while a desiccant **45** is inserted inside the seal substrate **30**. In the sealing step, it is desirable that the two substrates are sealed up in an inert gas atmosphere of, for example, nitrogen, argon or helium. If the two are sealed up in air, the reflective layer **50** will have defects of pin holes or the like and water and oxygen may penetrate into the underlying cathode **222** through the defects to oxidize the cathode **222**.

The fabrication process discussed above provides the display device **101** of FIGS. **1** to **3**.

Some examples of the electronic apparatus that includes the display device of the invention are mentioned below.

FIG. **9**(*a*) is a perspective view of a mobile phone. **1000** indicates a mobile phone body, of which **1001** is a display part that includes the display device of the invention.

FIG. **9**(*b*) is a perspective view that shows a wristwatch-type electronic apparatus. **1100** indicates a perspective view of a watch body; and **1101** indicates a display part that includes the display device of the invention.

FIG. **9**(*c*) is a perspective view that shows a mobile information processor of, for example, word processors and

personal computers. **1200** indicates such an information processor; **1202** indicates the input part thereof, such as a keyboard; **1206** indicates a display part that includes the display device of the invention; and **1204** indicates the information processor body. These exemplary electronic apparatus are driven by batteries and can realize stable power supply thereto as including the constitution of the invention. Most of these electronic apparatus are small-sized, and those including the display device of the invention can ensure a relatively large display region, even though they are small-sized as a whole.

Advantages of the Invention

In the display device of the invention having the constitution specifically defined herein, the region of the substrate not for display service is reduced, and the effective display region of the substrate is thereby enlarged. In this structure, in addition, a capacitor is formed between the cathode layer and the driving voltage conduction element, and the capacitor can compensates for the voltage reduction in at least the driving voltage conduction element. Owing to this, the display device of the invention is free from, or is protected from, errors that may be caused by the reduction in power voltage applied thereto.

What is claimed is:

1. A display device, comprising:

a substrate; and

a display region that serves for display and a non-display region not for display on the substrate, the display region and the non-display region each being aligned in a predetermined matrix pattern of barriers and recesses spaced from each other with the barriers adjacent thereto, the display region including at least a first electrode layer, an essential display layer with a substance switchable for display or non-display therein, and a second electrode layer that are aligned around a bottom of each recess in a recess region thereof, in that order, from a surface of the substrate;

the non-display region including at least the essential display layer and the second electrode layer around a bottom of each recess of the recess region in that order from the surface of the substrate;

the substrate being provided thereon with a switch unit connected to the first electrode layer to control electric conduction to the first electrode layer, an operation control unit connected to the switch unit to control the switch unit operation, and a driving voltage conduction element to drive voltage application to the operation control unit to drive the operation control unit therewith, and

the driving voltage conduction element so aligned as to be at least partly in the non-display region, and so as to be at least partly superimposed on the recess region.

2. The display device as claimed in claim **1**, the barriers being provided such that adjacent two barriers are parallel to each other along an axis thereof, and the driving voltage conduction element including a part formed between the neighboring barriers to be substantially axially parallel to the neighboring barriers.

3. The display device as claimed in claim **1**, further comprising a capacitor being formed between the driving voltage conduction element and the second electrode layer via an insulating layer therebetween, and the capacitor compensates for the voltage depression at least in the driving voltage conduction element.

4. The display device as claimed in claim **1**, the non-display region being provided with a first electrode layer between the substrate and the essential display layer and with an insulating layer to block the electric conduction between the first electrode layer and the second electrode layer.

5. The display device as claimed in claim **4**, the surface of the insulating layer being formed of a material of which an affinity for the essential display layer is relatively higher than an affinity of the surface of each barrier.

6. The display device as claimed in claim **1**, the substrate being provided thereon with multiple scanning lines and multiple data lines formed to cross each other, the switch unit being formed around the intersections of the scanning lines and the data lines, and the operation control unit including a data control unit to control the signal to pass through the data lines.

7. The display device as claimed in claim **1**, the substrate being provided thereon with multiple scanning lines and multiple data lines formed to cross each other, the switch unit being formed around the intersections of the scanning lines and the data lines, and the operation control unit including a scanning control unit to control the signal to pass through the scanning lines.

8. The display device as claimed in claim **1**, the substrate being provided thereon with multiple inspection lines, the switch unit being connected to the inspection lines, and the operation control unit including an inspection control unit to control the signal to pass through the inspection lines.

9. The display device as claimed in claim **1**, the essential display layer containing an organic EL substance.

10. A display device, comprising:

a substrate; and

a recess region of multiple recesses spaced from each other with barriers adjacent thereto, the recess region including a display region and a non-display region formed adjacent to the display region;

the recess region having at least a light-emitting layer formed therein, and the light-emitting layer being provided with a first electrode layer formed on one surface thereof and a second electrode layer formed on another surface thereof;

the substrate being provided thereon with a switch unit connected to the first electrode layer to control electric conduction to the first electrode layer, an operation control unit connected to the switch unit to control the switch unit operation, and a driving voltage conduction element to drive voltage application to the operation control unit to drive the operation control unit therewith, and

the driving voltage conduction element being so aligned as to overlap with at least the recess region in the non-display region.

11. The display device as claimed in claim **10**, the driving voltage conduction element being formed between adjacent barriers.

12. A display device, comprising:

a substrate; and

a light-emitting layer formed in a display region and in a non-display region adjacent to the display region, the light-emitting layer being provided with a first electrode layer formed on one surface thereof and a second electrode layer formed on another surface thereof;

the substrate being provided thereon with a switch unit connected to the first electrode layer to control electric conduction to the first electrode layer, an operation control unit connected to the switch unit to control the switch unit operation, and a driving voltage conduction element to drive voltage application to the operation

control unit to drive the operation control unit therewith, and

the driving voltage conduction element being so aligned as to overlap with at least the non-display region.

13. The display device as claimed in claim **12**, further comprising an insulating pattern of the same material as an insulating layer formed in the display region being formed in the non-display region, and the driving voltage conduction element being so aligned as to overlap with the insulating pattern.

14. The display device as claimed in claim **12**, further comprising a pattern of the same material as a pixel electrode formed in the display region being formed in the non-display region, and the driving voltage conduction element being so aligned as to overlap with the pattern.

15. An electronic apparatus, comprising:

the display device of claim **1**.

* * * * *