IN THE UNITED STATES DISTRICT COURT
FOR THE WESTERN DISTRICT OF TEXAS
MIDLAND-ODESSA DIVISION

PALISADE TECHNOLOGIES, LLP	§	
	§	
Plaintiff,	§	
	§	No. 7:24-cv-00262-DC-DTG
v.	§	
	§	
MICRON TECHNOLOGY, INC., MICRON SEMICONDUCTOR PRODUCTS, INC., and MICRON TECHNOLOGY TEXAS LLC,	§	
	§	
Defendants.	§	

CLAIM CONSTRUCTION ORDER AND MEMORANDUM IN SUPPORT THEREOF

Before the Court are the Parties' claim construction briefs: Defendants Micron Technology, Inc., Micron Semiconductor Products, Inc., and Micron Technology Texas LLC's Opening Claim Construction Brief (Dkt. No. 58), Plaintiff's Palisade Technologies, LLP's Responsive Claim Construction Brief (Dkt. No. 81), Defendants' Reply Claim Construction Brief (Dkt. No. 87), Plaintiff's Sur-Reply Claim Construction Brief (Dkt. No. 89), and the parties' Joint Claim Construction Statement (Dkt. No. 90).

The Court provided preliminary constructions for the disputed terms one day before the hearing. The Court held the *Markman* hearing on October 1, 2025. Dkt. No. 92. During that hearing, the Court informed the Parties of the final constructions for the disputed terms. *Id.* This Order does not alter any of those constructions.

I. DESCRIPTION OF THE ASSERTED PATENTS

Plaintiff asserts U.S. Patent Nos. 8,148,962, 8,327,051, 8,996,838, 9,281,314, and 9,524,974. The parties do not have any disputes with respect to the '314 Patent.

A. U.S. Patent No. 8,148,962

The ’962 Patent is entitled “Transient load voltage regulator.” The patent describes an improved voltage regulator that uses a feedback circuit. ’962 Patent at Abstract, 2:20–29. Figure 3 depicts a “high-level circuit diagram of one embodiment of a power supply regulator circuit 301 according to various aspects of the invention described herein.” *Id.* at 5:45–48.

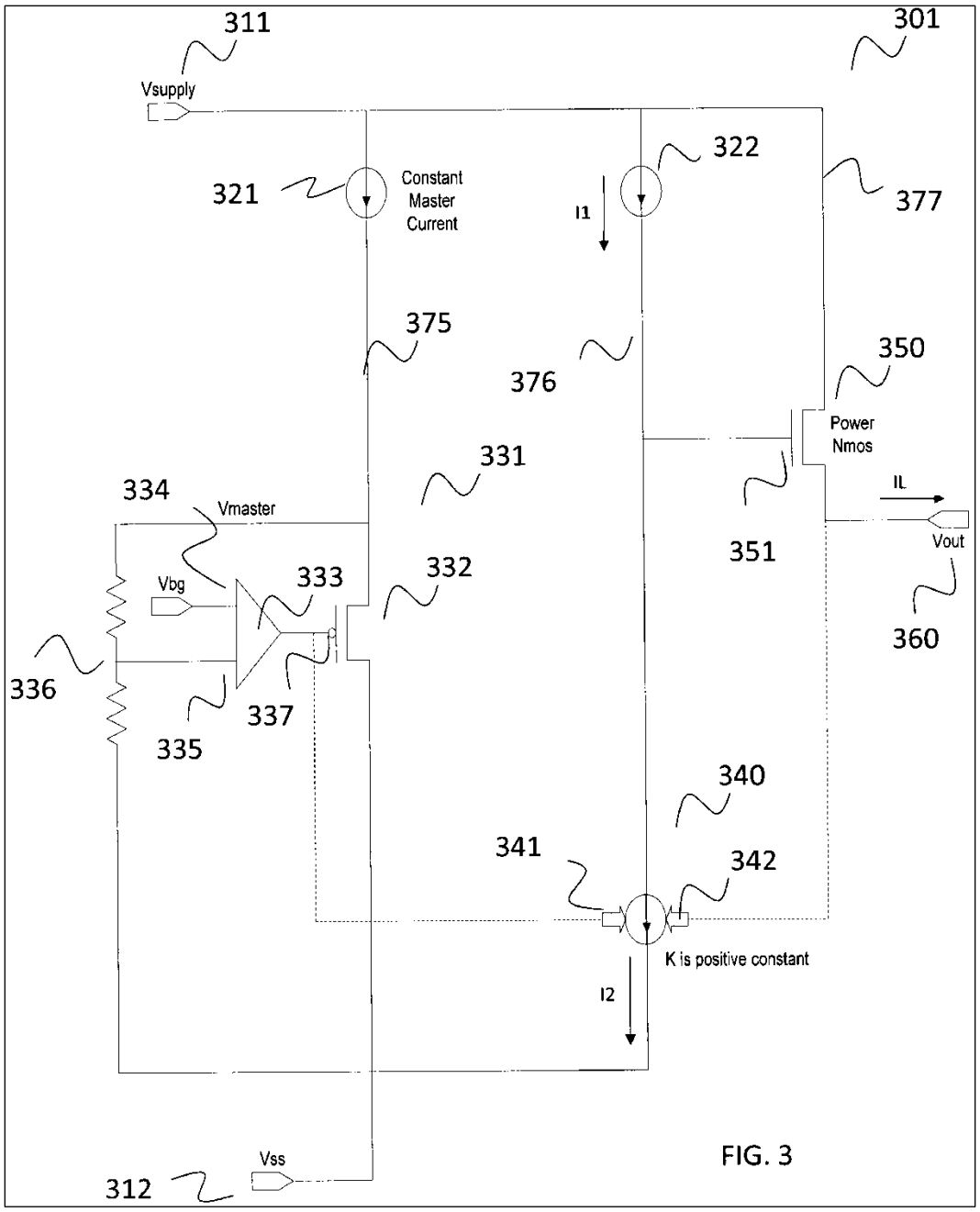

FIG. 3

The specification describes that feedback circuit 331 "includes a differential amplifier 333 and a feedback transistor 332." *Id.* at 5:53–55. The specification describes that feedback circuit 331 is "arranged such that a voltage at gate 337 is maintained substantially constant." *Id.* at 5:56–57. The source of the feedback transistor 332 is connected to current source 321 while the drain is connected to ground (Vss).

B. U.S. Patent No. 8,327,051

The '051 Patent is entitled "Portable handheld memory card and methods for use therewith." The specification describes that the claimed memory card "may include a Universal Serial Bus (USB) port, USB controller circuitry, an input/output (I/O) port, a memory, and decompression circuitry configured to decompress compressed data stored in the memory." '051 Patent at Abstract. The specification further describes that the "USB port and I/O port may be positioned to allow a same card-insertion direction irrespective of whether a host device comprises a mating USB port or a mating I/O port." *Id.*

The specification describes that Figure 2 is a "schematic of an exemplary pinout of an embodiment of a memory card 200." *Id.* at 4:38–39. Figure 2 depicts that memory card 200 "is for the four-bit SD transfer mode, including pins for the voltage Vdd, the command line CMD, the clock line CLK, and the data bus DATA." *Id.* at 4:46–49. Figure 2 also depicts that the USB port "includes serial data pins D+ and D-." *Id.* at 4:61.

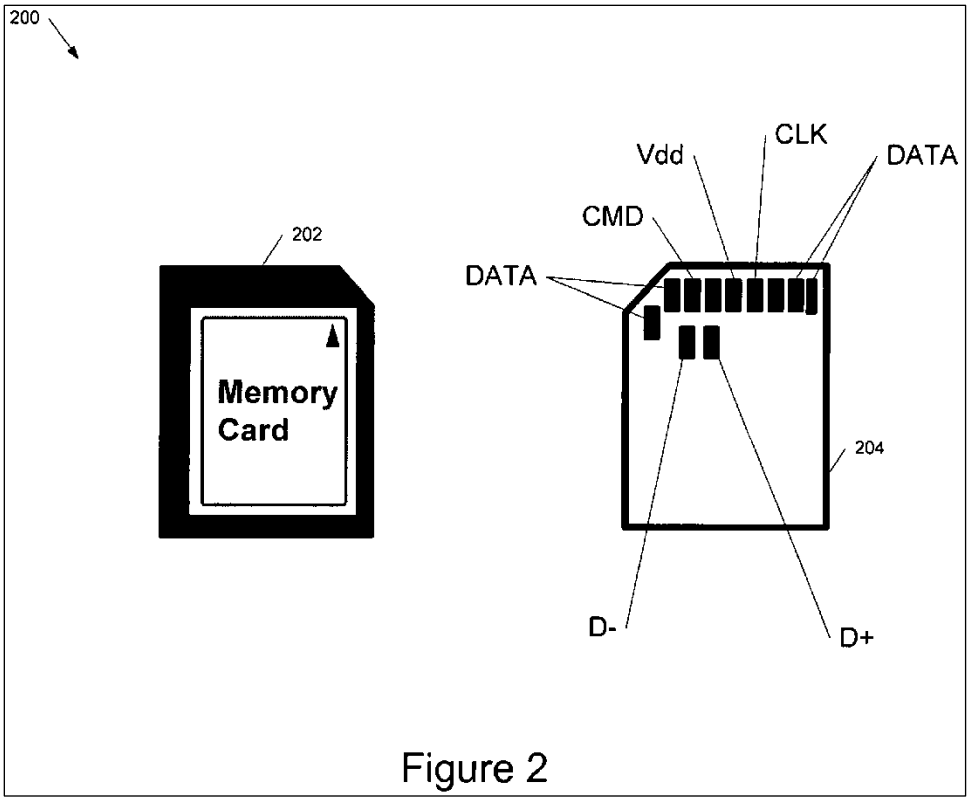

Figure 2

The specification describes that "[w]hen the memory card 200 is inserted into a host device, the mating [SD / USB] port of the host device is electrically connected to the [SD / USB] port of the memory card 200." *Id.* at 4:56–58, 5:1–3.

C. U.S. Patent No. 8,996,838

The '838 Patent is entitled "Structure variation detection for a memory having a three-dimensional memory configuration." Figure 2 depicts an embodiment of a "column," which may be "may be integrated within a memory having a three dimensional (3D) memory configuration." '838 Patent at 11:58–59.

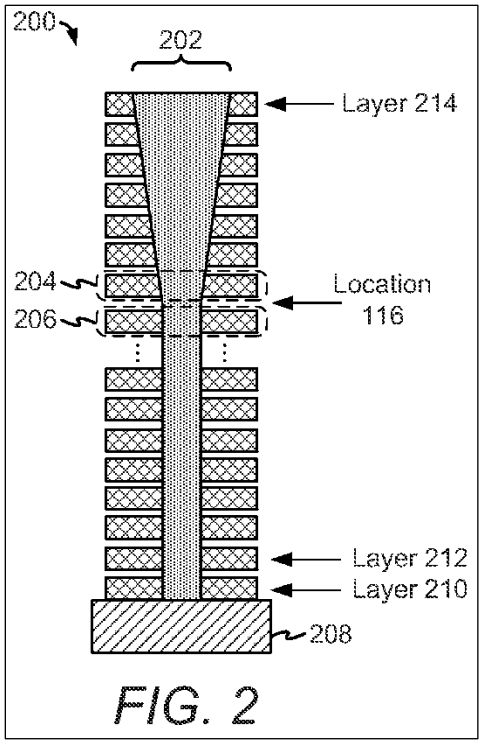

The specification describes that Figure 2 depicts various layers upon which memory may be formed. *See id.* at 12:3–5. Figure 2 also depicts structure 202, which is formed by etching. *Id.* at 12:8–11. The specification describes that structure 202 may have "variation," *e.g.*, the tapering between layers 214 and 206, which may be the result of etching. *Id.* at 12:24. The specification describes that location 116 may indicate where the variation begins. *Id.* at 12:26–28.

D. U.S. Patent No. 9,524,974

The '974 Patent is entitled "Alternating sidewall assisted patterning." The specification describes that the claimed invention is "[a] sidewall assisted process may be used to form trenches, e.g. for bit lines, or other conductive lines, so that trenches alternate between two different profiles." '974 Patent at 2:9–11. The specification describes that "a first trench profile may have an upper portion that is significantly wider than a lower portion, while a second trench profile may be substantially rectangular, having the same width from top to bottom." *Id.* at 2:11–15. The specification describes that when a metal such as copper is deposited into the first and

second trenches, there may be air gaps in the second trenches and none in the first trenches. *Id.* at 2:15–18. The air gaps in the second trenches may reduce the capacitive coupling between conductive lines formed in the first trenches, which can improve switching speed. *Id.* at 10:8–10. The specification also describes that

> [S]ubstantially void-free metal is deposited in both first and second trenches so that alternating conductive lines are formed. Lines formed in first trenches may have wider upper surfaces that facilitate connection of contact plugs from above (e.g. greater tolerance for misalignment). Lines formed in second trenches may have wider lower surfaces that facilitate connection with underlying contact plugs.

Id. at 2:18–26.

II. LEGAL STANDARD

A. General principles

The general rule is that claim terms are generally given their plain-and-ordinary meaning. *Phillips v. AWH Corp.*, 415 F.3d 1303, 1312 (Fed. Cir. 2005) (*en banc*); *Azure Networks, LLC v. CSR PLC*, 771 F.3d 1336, 1347 (Fed. Cir. 2014), *vacated on other grounds*, 575 U.S. 959, 959 (2015) ("There is a heavy presumption that claim terms carry their accustomed meaning in the relevant community at the relevant time.") (internal quotation omitted). The plain-and-ordinary meaning of a term is the "meaning that the term would have to a person of ordinary skill in the art in question at the time of the invention." *Phillips*, 415 F.3d at 1313.

The "only two exceptions to [the] general rule" that claim terms are construed according to their plain-and-ordinary meaning are when the patentee (1) acts as his/her own lexicographer or (2) disavows the full scope of the claim term either in the specification or during prosecution. *Thorner v. Sony Comput. Ent. Am. LLC*, 669 F.3d 1362, 1365 (Fed. Cir. 2012). The Federal Circuit has counseled that "[t]he standards for finding lexicography and disavowal are exacting." *Hill-Rom Servs., Inc. v. Stryker Corp.*, 755 F.3d 1367, 1371 (Fed. Cir. 2014). To act as his/her

own lexicographer, the patentee must "clearly set forth a definition of the disputed claim term" and "'clearly express an intent' to [define] the term." *Thorner,* 669 F.3d at 1365. "For a statement during prosecution to qualify as a disavowal of claim scope, it must be 'so clear as to show reasonable clarity and deliberateness,' and 'so unmistakable as to be unambiguous evidence of disclaimer.'" *Genuine Enabling Tech. LLC v. Nintendo Co.*, 29 F.4th 1365, 1374 (Fed. Cir. 2022) (quoting *Omega Eng'g, Inc. v. Raytek Corp.*, 334 F.3d 1314, 1325 (Fed. Cir. 2003)).

"Like the specification, the prosecution history provides evidence of how the PTO and the inventor understood the patent." *Phillips*, 415 F.3d at 1317. "[D]istinguishing the claimed invention over the prior art, an applicant is indicating what a claim does not cover." *Spectrum Int'l, Inc. v. Sterilite Corp.*, 164 F.3d 1372, 1379 (Fed. Cir. 1998). The doctrine of prosecution disclaimer precludes a patentee from recapturing a specific meaning that was previously disclaimed during prosecution. *Omega Eng'g, Inc. v. Raytek Corp.*, 334 F.3d 1314, 1323 (Fed. Cir. 2003). "[F]or prosecution disclaimer to attach, our precedent requires that the alleged disavowing actions or statements made during prosecution be both clear and unmistakable." *Id.* at 1325–26. Accordingly, when "an applicant's statements are amenable to multiple reasonable interpretations, they cannot be deemed clear and unmistakable." *3M Innovative Props. Co. v. Tredegar Corp.*, 725 F.3d 1315, 1326 (Fed. Cir. 2013).

A construction of "plain and ordinary meaning" may be inadequate when a term has more than one "ordinary" meaning or when reliance on a term's "ordinary" meaning does not resolve the parties' dispute. *O2 Micro Int'l Ltd. v. Beyond Innovation Tech. Co*., 521 F.3d 1351, 1361 (Fed. Cir. 2008). In that case, the Court must describe what the plain-and-ordinary meaning is. *Id.*

"Although the specification may aid the court in interpreting the meaning of disputed claim language . . ., particular embodiments and examples appearing in the specification will not generally be read into the claims." *Constant v. Advanced Micro-Devices, Inc.*, 848 F.2d 1560, 1571 (Fed. Cir. 1988). "[I]t is improper to read limitations from a preferred embodiment described in the specification—even if it is the only embodiment—into the claims absent a clear indication in the intrinsic record that the patentee intended the claims to be so limited." *Liebel-Flarsheim Co. v. Medrad, Inc.*, 358 F.3d 898, 913 (Fed. Cir. 2004).

Although extrinsic evidence can be useful, it is "less significant than the intrinsic record in determining 'the legally operative meaning of claim language.'" *Phillips*, 415 F.3d at 1317 (quoting *C.R. Bard, Inc. v. U.S. Surgical Corp.*, 388 F.3d 858, 862 (Fed. Cir. 2004)). Technical dictionaries may be helpful, but they may also provide definitions that are too broad or not indicative of how the term is used in the patent. *Id.* at 1318. Expert testimony may also be helpful, but an expert's conclusory or unsupported assertions as to the meaning of a term are not. *Id.*

B. Claim differentiation

Under the doctrine of claim differentiation, a court presumes that each claim in a patent has a different scope. *Phillips*, 415 F.3d at 1314–15. The presumption is rebutted when, for example, the "construction of an independent claim leads to a clear conclusion inconsistent with a dependent claim." *Id.* The presumption is also rebutted when there is a "contrary construction dictated by the written description or prosecution history." *Seachange Int'l., Inc. v. C-COR, Inc.*, 413 F.3d 1361, 1369 (Fed. Cir. 2005). The presumption does not apply if it serves to broaden the claims beyond their meaning in light of the specification. *Intell. Ventures I LLC v. Motorola Mobility LLC*, 870 F.3d 1320, 1326 (Fed. Cir. 2017).

C. Indefiniteness

"[I]ndefiniteness is a question of law and in effect part of claim construction." *ePlus, Inc. v. Lawson Software, Inc.*, 700 F.3d 509, 517 (Fed. Cir. 2012). Patent claims must particularly point out and distinctly claim the subject matter regarded as the invention. 35 U.S.C. § 112, ¶ 2. A claim, when viewed in light of the intrinsic evidence, must "inform those skilled in the art about the scope of the invention with reasonable certainty." *Nautilus Inc. v. Biosig Instruments, Inc.*, 572 U.S. 898, 910 (2014). If it does not, the claim fails § 112, ¶ 2 and is therefore invalid as indefinite. *Id.* at 901. Whether a claim is indefinite is determined from the perspective of one of ordinary skill in the art as of the time the application was filed. *Id.* at 911.

D. Means-Plus-Function Claiming

A patent claim may be expressed using functional language. *See* 35 U.S.C. § 112 ¶ 6.[1] *Williamson v. Citrix Online, LLC*, 792 F.3d 1339, 1347–49 (Fed. Cir. 2015). In particular, § 112, ¶ 6 provides that a structure may be claimed as a "means . . . for performing a specified function" and that an act may be claimed as a "step for performing a specified function." *Masco Corp. v. United States*, 303 F.3d 1316, 1326 (Fed. Cir. 2002).

The presumption is that terms reciting "means" are subject to § 112, ¶ 6. *Williamson*, 792 F.3d at 1348. But if the term does not use the word "means," then it is presumed not to be subject to § 112, ¶ 6. *Id.* "That presumption can be overcome, but only if the challenger demonstrates that the claim term fails to recite sufficiently definite structure or else recites function without reciting sufficient structure for performing that function." *Samsung Elecs. Am., Inc. v. Prisua Eng'g Corp.*, 948 F.3d 1342 (Fed. Cir. 2020) (internal quotations removed) (citing *Williamson*,

[1]The American Invents Act of 2011 changed the numbering of the relevant subsection from § 112, ¶ 6 to § 112(f). Because the substance of the subsection did not change, the undersigned will refer to the relevant subsection as § 112, ¶ 6 in keeping with the numeration at the time of the patent filing.

792 F.3d at 1349). "The correct inquiry, when 'means' is absent from a limitation, is whether the limitation, read in light of the remaining claim language, specification, prosecution history, and relevant extrinsic evidence, has sufficiently definite structure to a person of ordinary skill in the art." *Apple Inc. v. Motorola, Inc.*, 757 F.3d 1286, 1298 (Fed. Cir. 2014), *overruled on other grounds by Williamson*, 792 F.3d at 1349.

When § 112 ¶ 6 applies, it limits the scope of the functional term "to only the structure, materials, or acts described in the specification as corresponding to the claimed function and equivalents thereof." *Williamson*, 792 F.3d at 1347. Construing a means-plus-function limitation involves multiple steps. "The first step . . . is a determination of the function of the means-plus-function limitation." *Medtronic, Inc. v. Advanced Cardiovascular Sys., Inc.*, 248 F.3d 1303, 1311 (Fed. Cir. 2001). "[T]he next step is to determine the corresponding structure disclosed in the specification and equivalents thereof." *Id.* A "structure disclosed in the specification is 'corresponding' structure only if the specification or prosecution history clearly links or associates that structure to the function recited in the claim." *Id.* The focus of the "corresponding structure" inquiry is not merely whether a structure is capable of performing the recited function, but rather whether the corresponding structure is "clearly linked or associated with the [recited] function." *Id.* The corresponding structure "must include all structure that actually performs the recited function." *Default Proof Credit Card Sys. v. Home Depot U.S.A., Inc.*, 412 F.3d 1291, 1298 (Fed. Cir. 2005). However, § 112, ¶ 6 does not permit "incorporation of structure from the written description beyond that necessary to perform the claimed function." *Micro Chem., Inc. v. Great Plains Chem. Co.*, 194 F.3d 1250, 1258 (Fed. Cir. 1999).

For § 112, ¶ 6 limitations implemented by a programmed general-purpose computer or microprocessor, the corresponding structure described in the patent specification must include an

algorithm for performing the function, *i.e.*, the corresponding structure is a processor + algorithm. *WMS Gaming Inc. v. Int'l Game Tech.*, 184 F.3d 1339,1349 (Fed. Cir. 1999). In this situation, the corresponding structure is not a general-purpose computer but rather the special purpose computer programmed to perform the disclosed algorithm. *Aristocrat Techs. Austl. Pty Ltd. v. Int'l Game Tech.*, 521 F.3d 1328, 1333 (Fed. Cir. 2008). The algorithm may be described in "any understandable terms," such as "as a mathematical formula, in prose, or as a flow chart, or in any other manner that provides sufficient structure." *Function Media, L.L.C. v. Google, Inc.*, 708 F.3d 1310, 1318 (Fed. Cir. 2013). Federal Circuit caselaw does not require that the patent describe an algorithm "if the selection of the algorithm or group of algorithms needed to perform the function in question would be readily apparent to a person of skill in the art." *Aristocrat Techs. Australia Pty Ltd. v. Multimedia Games, Inc.*, 266 F. App'x 942, 947-48 (Fed. Cir. 2008).

Finally, § 112, ¶ 6 does not apply when the claim itself describes the algorithm. *St. Isidore Rsch., LLC v. Comerica Inc.*, No. 2:15-CV-1390-JRG-RSP, 2016 WL 4988246, at *13 (E.D. Tex. Sept. 19, 2016).

III. LEGAL ANALYSIS

A. Term #1: "feedback circuit … including a feedback transistor"

Term	Plaintiff's Proposed Construction	Defendants' Proposed Construction
#1: "feedback circuit … including a feedback transistor" U.S. Patent No. 8,148,962, Claim 1 Proposed by Defendants	Plain and ordinary meaning	"a circuit that generates a voltage at the gate of a transistor by comparing a voltage proportional to the voltage across the drain and source of the transistor and a reference voltage with a differential amplifier"

The Parties' Positions:

Defendants contend that the patentee implicitly redefined the meaning of this term through its description of the embodiments. Opening at 5. Defendants contend that because those descriptions are inconsistent with the plain-and-ordinary meaning, Plaintiff's plain-and-ordinary meaning construction would "render the claim non-enabled and lacking written description." *Id.* at 6.

Defendants contend that the plain-and-ordinary meaning requires using a portion of the output of a circuit as the input to the feedback circuit. *Id.* at 6–7 (citing Opening, Exs. 1–6 (dictionaries)). Defendants contend that the description of the prior art indicates that the patentee also shares that understanding. *Id.* at 7. More specifically, Defendants contend that Figure 2 depicts that output voltage 107 is fed back to input 121 of differential amplifier 101.

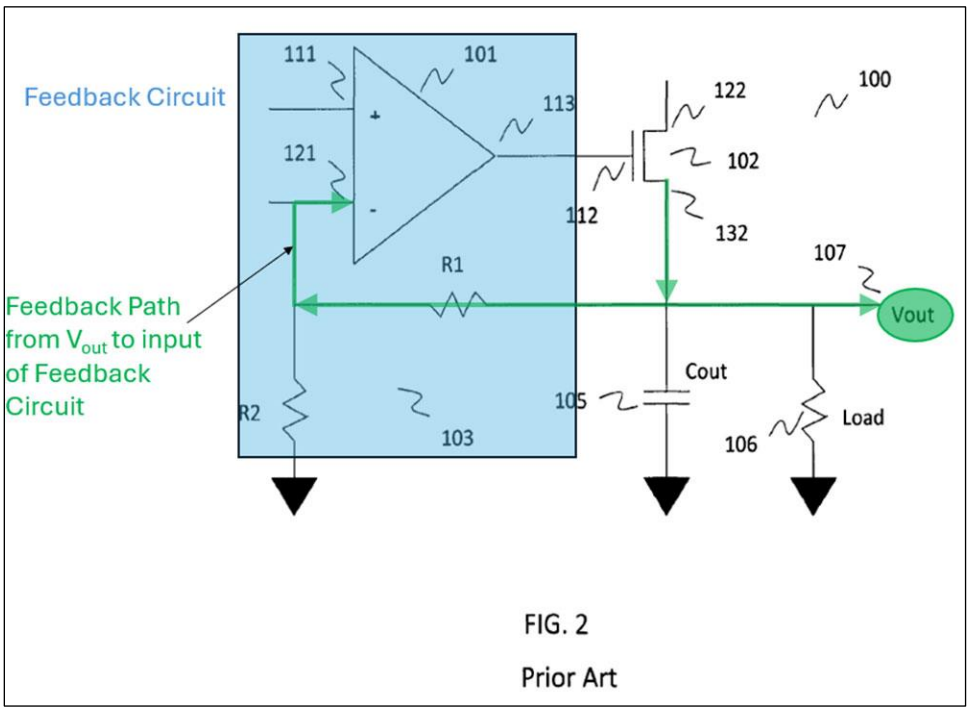

Id. at 7–8 (citing '962 Patent at Figure 2 (annotations added by Defendants), 5:7–10, 5:11–15).

Defendants contend that the "Claims, Abstract, Summary of the Invention, and Detailed Description" do not describe "feedback circuit" according to its plain-and-ordinary meaning, *i.e.*, "a circuit where a portion of the output is fed back as an input." *Id.* at 8. With respect to the specification, using Figure 3 as an example, Defendants contend that the description of the feedback circuit "says nothing about the circuit's output being fed back into its input—a critical requirement of a feedback circuit." *Id.* (citing '962 Patent at 5:52–57).

Defendants further contend that Figure 3 likewise does not depict a feedback circuit.

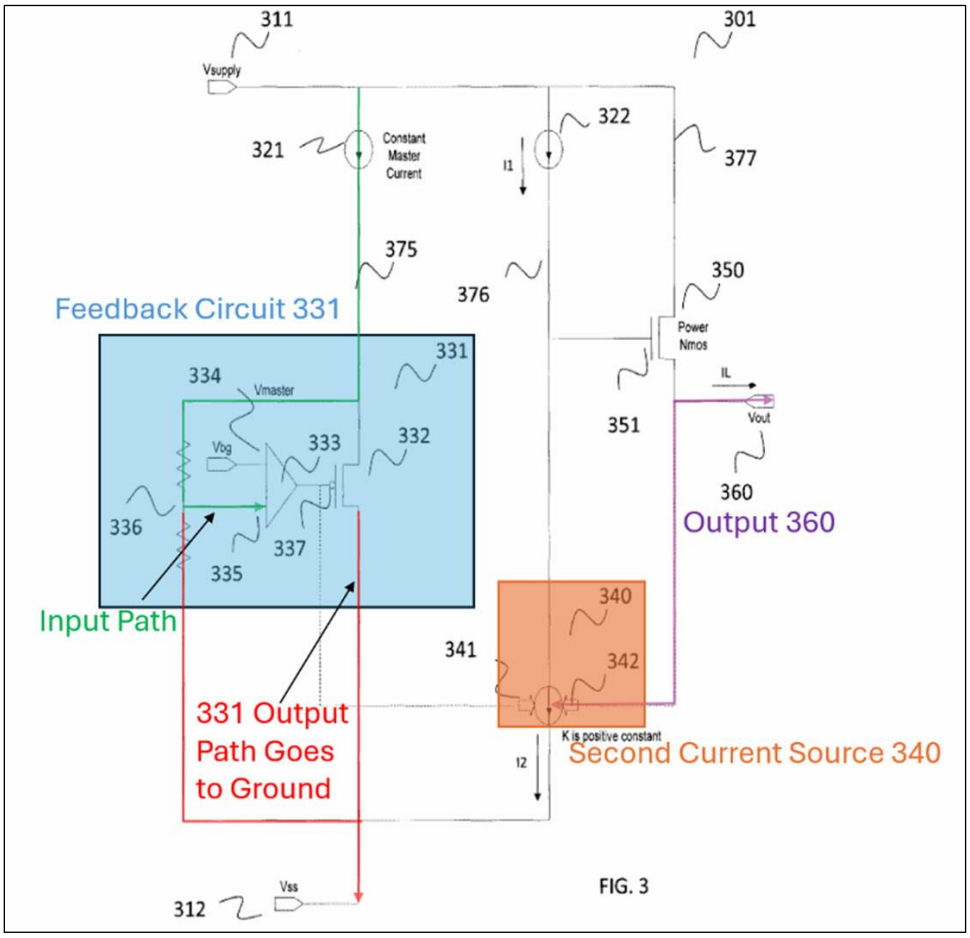

Id. (annotations added by Defendants). More specifically, Defendants contend that neither input to differential amplifier 333 "contains any portion of the output voltage from the feedback circuit itself or from the voltage regulator as a whole." *Id.* at 9. Defendants contend that, by contrast, the

top input is connected to reference voltage Vbg while the bottom input is proportional to the voltage across the source and drain of transistor 332. *Id.* Furthermore, Defendants contend that output 360 "is not fed back into the inputs of the 'feedback circuit'—it is instead fed into the 'second current source.'" *Id.*

With respect to the claims, Defendants contend that the claim language does not "require the output (or portion thereof) being returned to the input[,]" but rather only recites that the "circuit's output is returned to the input of the second current supply circuit [and] not the claimed 'feedback circuit.'" *Id.* (citing Dkt. No. 58-1 (Baker Decl.) at ¶ 50).

Defendants contend that their proposed construction "comports with what the patentee actually described as its 'feedback circuit' in the disclosed embodiments." *Id.* (citing Dkt. No. 58-1 (Baker Decl.) at ¶¶ 51–53). More specifically, Defendants contend that the specification, in reference to Figure 5, describes what connects to each of the input to the differential amplifier, which their proposed construction likewise mirrors. *Id.* (citing '962 Patent at 8:50–56, Figures 3–6).

In its response, Plaintiff contends that the "use of the term 'feedback circuit' in the claims and the specification is consistent with its plain and ordinary meaning." Response at 2. With respect to Figure 3, Plaintiff contends that the specification describes that "[t]he feedback circuit 331 achieves this substantially constant gate voltage by using the differential amplifier 333 to compare a voltage proportional to the source-drain voltage of feedback transistor 332 with a reference voltage and then drive the gate of that feedback transistor." *Id.* at 4 (citing Dkt. No. 81-1 (Dorney Decl.) at ¶ 45;'962 Patent at 8:48–60). Plaintiff contends that Defendants and their expert acknowledge this. *Id.* (citing Opening at 9, Dkt. No. 58-1 (Baker Decl.) at ¶ 48). Plaintiff contends that "the feedback circuit identified above and described in the specification for Figures

3-6 plainly feeds back an output of the circuit—the voltage across the source-drain of the feedback transistor—to control the input of the feedback transistor (i.e., at its gate)." *Id.* 4–5 (citing Dkt. No. 81-1 (Dorney Decl.) at ¶ 45).

Plaintiff contends that Defendants' proposed construction improperly limits the claim term to the preferred embodiment. *Id.* at 5 (citing *Thorner*, 669 F.3d at 1365). Plaintiff contends that Defendants do not allege lexicography or disclaimer. *Id.*

Plaintiff contends that Defendants are incorrect that Figure 3 does not depict that the "inputs to the disclosed feedback circuit do not contain any portion of the output voltage of the feedback circuit." *Id.* More specifically, Plaintiff contends that Defendants agree that the feedback circuit in Figure 3 "***receives two inputs*** at its differential amplifier 333: a reference voltage labeled 'Vbg' and ***a voltage proportional to a voltage across the drain and source terminals of the feedback transistor***." *Id.* (quoting Opening at 8–9 (emphasis in Plaintiff's brief)). Plaintiff contends that Defendants ignore that "voltage proportional to a voltage across the drain source terminals of the feedback transistor" is obtained by feeding back the source-drain voltage of the feedback transistor across a voltage divider to the input of the feedback circuit." *Id.* (citing Dkt. No. 81-1 (Dorney Decl.) at ¶ 46). Plaintiff contends that a POSITA would understand that "the output of a circuit includes not only current but also voltage, and plainly the voltage at the output of the identified feedback circuit is fed back to its input." *Id.* (citing Dkt. No. 81-1 (Dorney Decl.) at ¶ 47).

Plaintiff contends that, contrary to Defendants' argument, "there is no requirement in the claims, specification, or general understanding of the term 'feedback circuit' that requires what is fed back within the circuit to be from the ultimate output, such as the 'voltage regulator as a whole.'" *Id.* (citing Dkt. No. 81-1 (Dorney Decl.) at ¶ 48).

In its reply, Defendants contend that "[t]he parties agree that a POSITA would understand a 'feedback circuit' to require a portion of the circuit's output be *fed back* into its input." Reply at 1 (citing Response at 4–5; Dkt. No. 81-1 at ¶¶ 45–46) (emphasis in Defendants' brief). Defendants contend that, on the other hand, the specification describes "feedback circuit" in a manner that is inconsistent with its plain-and-ordinary meaning and that a POSITA would understand that Defendants' proposed construction captures the specification's description of this term. *Id.* at 1–2.

Defendants contend that, contrary to Plaintiff's argument, the patent does not disclose that the "'feedback circuit's' own output is fed back into its input." *Id.* Defendants contend that Figure 5 depicts that the output of differential amplifier 533, which is also voltage at transistor gate 537, is not fed back into the input of the feedback circuit but rather is fed (green line) into the second current supply circuit (orange box). *Id.* (annotations added by Defendants).

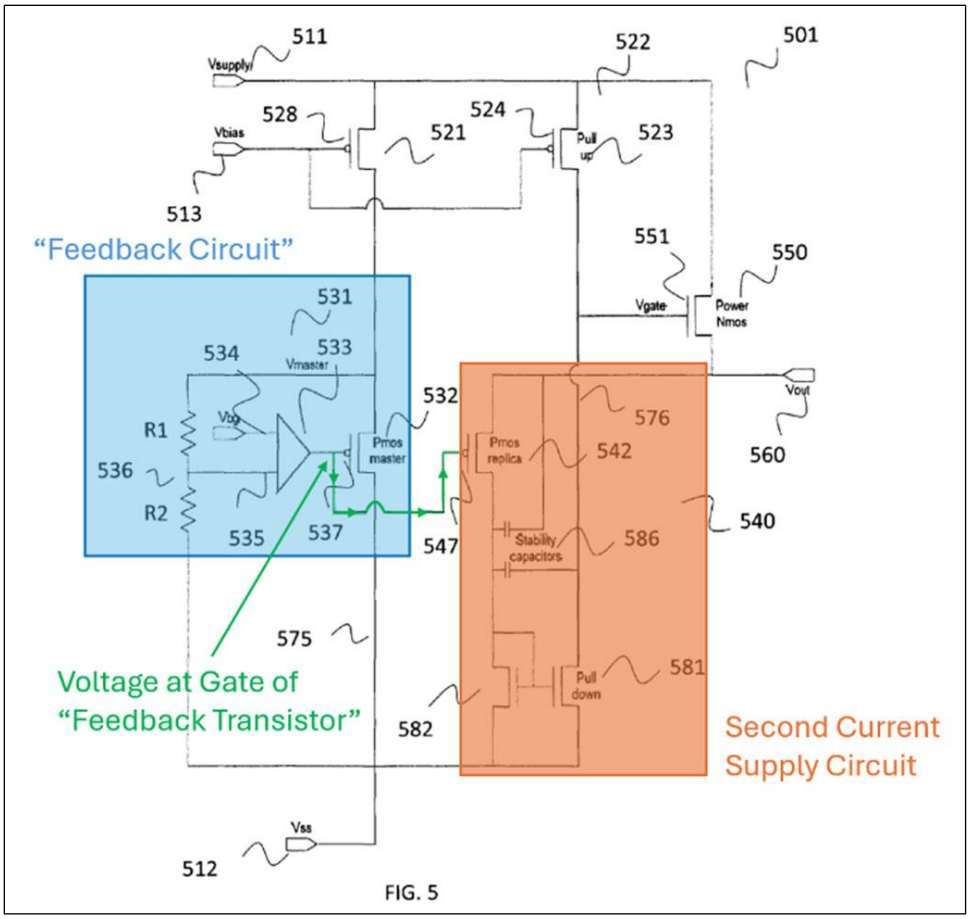

FIG. 5

Defendants contend that the source-drain voltage of the feedback transistor, *e.g.*, feedback transistor 332 in Figure 3, is not an output of the feedback circuit. *Id.* at 3. Defendants further contend that the source-drain voltage that Plaintiff identifies "is determined entirely by the constant master current source 321." *Id.*

Defendants contend that the patentee acted as their own lexicographer by implicitly redefining "feedback circuit" in a way that departs from the plain-and-ordinary meaning. *Id.* at 4.

In its sur-reply, Plaintiff contends that patentee uses "feedback circuit" according to the plain-and-ordinary meaning and "provides examples of a feedback circuit that feeds back the voltage across the source-drain of a feedback transistor to an input of the feedback circuit which controls the gate of that feedback transistor." Sur-Reply at 1. Plaintiff further contends that Defendants do not any lexicography, disclaimer, or disavowal. *Id.* at 3.

Plaintiff contends that Defendants and its expert "acknowledge that this voltage across the drain and source terminals is one of the inputs to the feedback circuit." *Id.* at 2 (citing Opening at 9; Dkt. 58-1 at ¶ 48).

Plaintiff contends that Defendants "assert[] incorrectly and without support that the source-drain voltage is not an output of the feedback circuit." *Id.* Rather, Plaintiff contends that

> But a given circuit can have multiple outputs, and the voltage drop across the feedback resistor in the feedback circuits disclosed in the '962 patent is an output of that circuit. Moreover, that output is fed back to control the gate of the feedback transistor which, in part, determines that voltage that is fed back to the input. [Defendants'] argument (in a footnote) that a change in source-drain voltage driven by feedback can be ignored because the feedback circuit is "specifically constructed to maintain that gate voltage 'substantially constant'" is nonsensical. The structure of the feedback circuit, including feeding back that voltage to control the gate of the feedback transistor, is part of what maintains the gate voltage "substantially constant."

Id. at 2–3 (internal citations omitted).

Plaintiff contends that Defendants' "discussion of other aspects of the feedback circuit are an irrelevant distraction." *Id.* at 3 (citing Reply at 2).

<u>The Court's Analysis:</u>

After reviewing the parties' arguments and considering the applicable law, the Court agrees with Plaintiff that this term should be construed according to its plain-and-ordinary meaning for the reasons that follow. ***First***, the "heavy presumption" is that terms should be construed according to their plain-and-ordinary meaning. *Azure Networks*, 771 F.3d at 1347.

Second, the only two exceptions to the general rule that a term should be construed as having its plain-and-ordinary meaning are lexicography and disclaimer. *Thorner*, 669 F.3d at 1365. Defendants do not allege disclaimer, but do allege that the patentee implicitly acted as their own lexicographer as demonstrated by the lack of a feedback loop in Figures 3 and 5 that feeds back a portion of the circuit's output be into its input. Opening at 8–9, Reply at 1–2.

The Court concludes that the patentee did not act as their own lexicographer. To act as his/her own lexicographer, the patentee must "clearly set forth a definition of the disputed claim term" and "'clearly express an intent' to [define] the term." *Thorner,* 669 F.3d at 1365. The standard for finding lexicography is exacting. *Hill-Rom Servs.*, 755 F.3d at 1371. As described below, the Court concludes Defendants have not demonstrated that both elements necessary for lexicography are met.

Defendants focus on Figures 3 and 5, but ignore Figure 6, which clearly depicts that the output of feedback transistor 632 goes through a resistor before going into input 635.

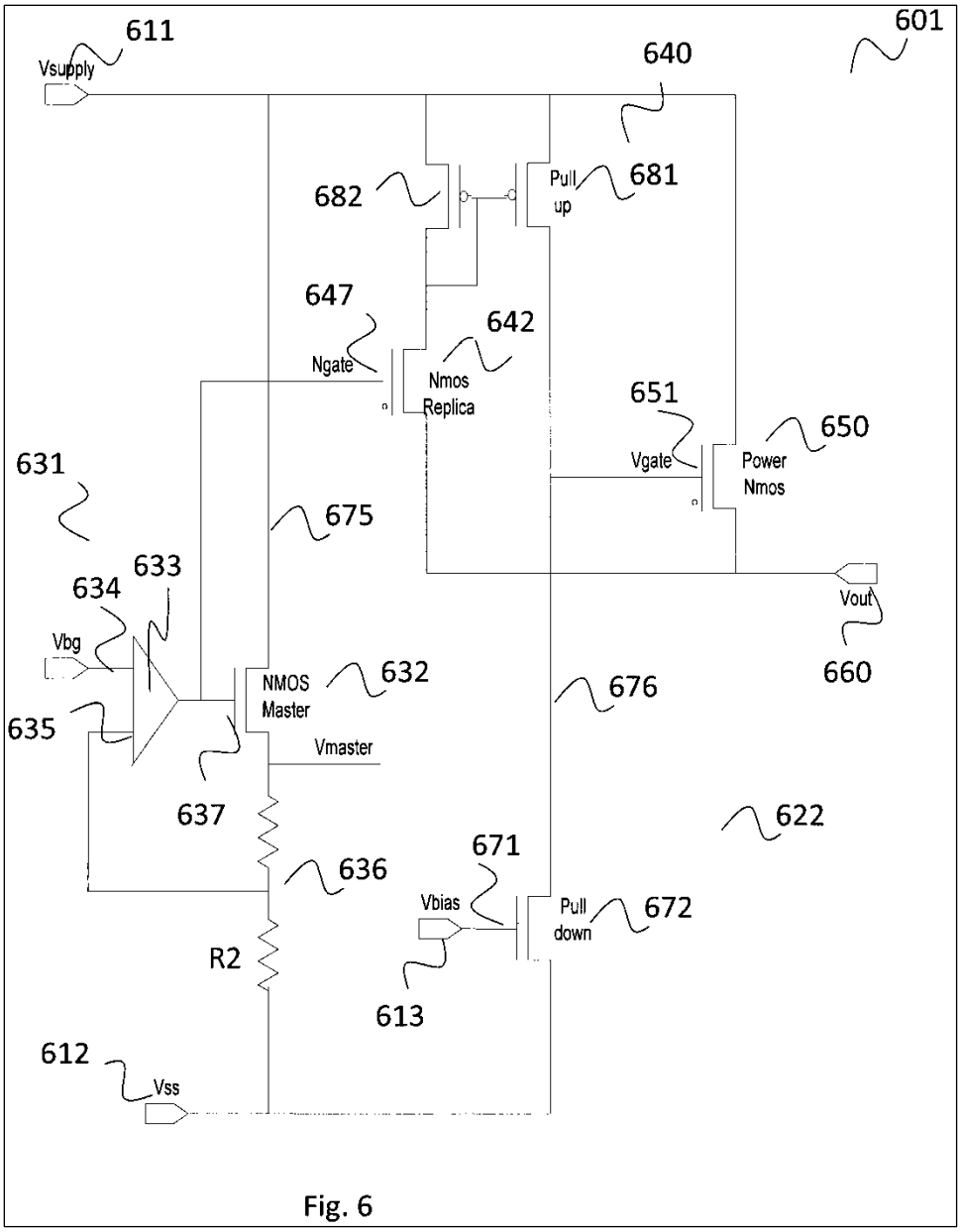

Fig. 6

This embodiment is inconsistent with the lexicography that Defendants allege, which indicates that the patentee did not act as their own lexicographer. *See Baxalta Inc. v. Genentech, Inc.*, 972 F.3d 1341, 1347 (Fed. Cir. 2020) ("claim construction requires that we 'consider the specification as a whole, and [ ] read all portions of the written description, if possible, in a manner that renders the patent internally consistent.'") (quoting *Budde v. HarleyDavidson, Inc.*, 250 F.3d 1369, 1379–80 (Fed. Cir. 2001) (alteration in original)).

With respect to Figures 3 and 5, the Court disagrees with Defendants that these figures indicate that the patentee acted as their own lexicographer to redefine the meaning of "feedback circuit." The structure for Figures 3, 4, and 5 is similar, namely, where the drain of the feedback transistor and one of end of the voltage divider are connected to ground, so Court will focus on Figure 3 as the parties primarily focused their arguments on this figure.

The Court agrees with Plaintiff that the source-drain voltage of feedback transistor 332 (hereinafter "V_{sd}") is the output of the feedback circuit that is fed back into the input of differential amplifier 333. The Court adds the red labels to Figure 3 to help clarify the Court's explanation.

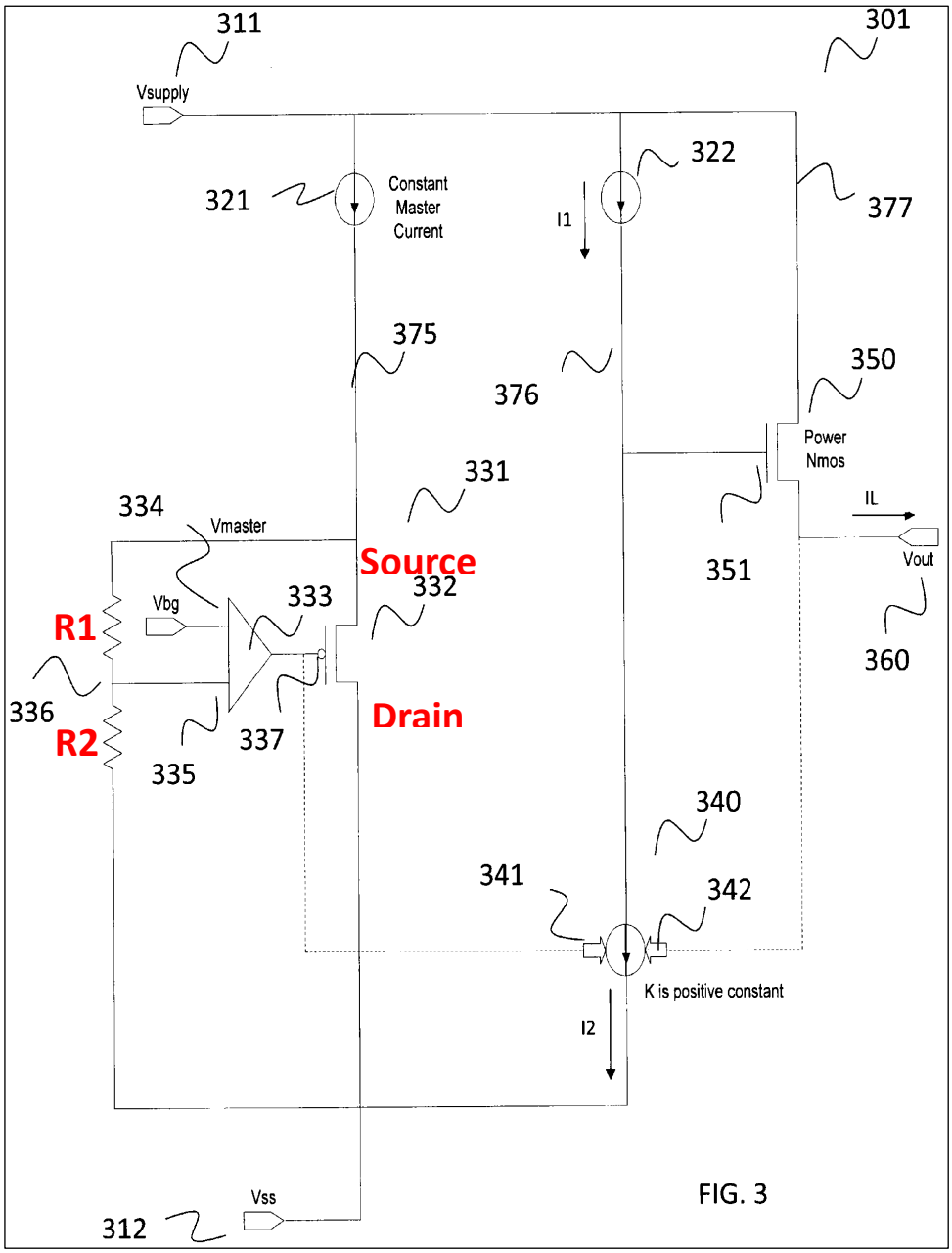

FIG. 3

The voltage across the source-drain, V_{sd}, is the same as the voltage across both resistors R1 and R2. Assuming, for simplicity, that the values of R1 and R2 are the same, then the voltage at input 335 will be half of V_{sd}. If V_{sd} increases, the voltage at input 335 also increases, albeit by half the amount, which means there is a larger difference, as compared to before V_{sd} increased, between the two inputs of differential amplifier as input 334 is fixed to the value of reference voltage V_{bg}.

If V_{sd} decreases, the voltage at input 335 also decreases, albeit by half the amount, which means there is a smaller difference between the two inputs of differential amplifier, as compared to before V_{sd} decreased.

Based on this analysis, the Court concludes that Figure 3 depicts that half of the output voltage, V_{sd}, of feedback transistor 332 is fed back into the input 335 of the differential amplifier 333. In other words, Figure 3 depicts that a portion of the output of a circuit is fed back as the input to the feedback circuit, as Defendants allege a feedback circuit must do. As such, the Court concludes that rather than providing evidence that the patentee described "feedback circuit" in a manner that is inconsistent with its plain-and-ordinary meaning, Figures 3, 4, and 5 describe "feedback circuit" according to its plain-and-ordinary meaning.

In conclusion, given that Figures 3 to 6 describes a "feedback circuit" in a manner consistent with its plain-and-ordinary meaning, the Court concludes that Defendants have not shown that there is a clear redefinition for this term or that there was an clear intent to redefine the term. *Thorner,* 669 F.3d at 1365.

Therefore, for the reasons described above, the Court finds that the patentee did not act as their own lexicographer and that the term should be construed according to its plain-and-ordinary meaning.

B. Term #2: "substantially constant"

Term	Plaintiff's Proposed Construction	Defendants' Proposed Construction
#2: "substantially constant" U.S. Patent No. 8,148,962, Claims 1, 14 Proposed by Defendants	Plain and ordinary meaning	Indefinite

The Parties' Positions:

Defendants contend that "substantially constant" is a term of degree, and because the intrinsic evidence does not provide objective boundaries, it is indefinite. Opening at 11. Defendants contend that the claims do not provide an objective baseline. *Id.* at 12. Defendants further contend that the specification "simply repeats the 'substantially constant' language without providing any objective standards on what it means to be substantially constant." *Id.* (citing '962 Patent at 2:29, 2:32, 2:62, 2:65, 3:28, 3:30, 3:47, 5:57, 8:50, 8:60, 8:63, 9:2-3, 9:7, 10:15, 11:22–24, 11:38). Defendants contend that "without any explanation, graphical illustration, or examples, a POSITA would have been left to guess what it actually means to be substantially constant." *Id.* at 13 (citing Dkt. No. 58-1 (Baker Decl.) at ¶¶ 56–58).

Defendants contend that the claims and specification use "substantially constant" to refer to both voltage and current. *Id.* at 11–12.

In its response, Plaintiff contends that a POSITA would understand that the claims use "substantially constant" in order to "(1) distinguish those components which maintain substantially constant voltage/current from those which are designed to vary; and (2) account for real-world conditions, such as component tolerances and environmental conditions, that cause voltage or current to diverge from idealized conditions, such as absolutely constant." Response at 7 (citing Dkt. No. 81-1 (Dorney Decl.) at ¶ 51). With respect to the former, Plaintiff contends that Claims 1 and 14 recite limitations where the components are designed to vary. *Id.* at 8.

With respect to the latter, Plaintiff contends that "as [Defendants'] expert acknowledges, small fluctuations in voltage or current could occur for any number of reasons, including environmental conditions such as temperature changes." *Id.* at 9 (citing Dkt. No. 58-1 at ¶ 56; Dkt. No. 81-1 (Dorney Decl.) at ¶ 58). Plaintiff contends that a POSITA "would understand that

the ’962 patent claims are directed to real-world circuits and use the term ‘substantially’ to account for these issues when describing otherwise “constant” voltage or current.” *Id.* (citing Dkt. No. 81-1 (Dorney Decl.) at ¶ 58). Plaintiff contends that

> The claims do not require that the circuits output a specific voltage or current within some tolerance but rather that they are constructed to maintain “substantially constant” voltage or current as opposed to circuits that are constructed to vary. One of ordinary skill would be able to determine the scope of these claim limitations based on the circuit design.

Id. (internal citations omitted).

Plaintiff contends that Defendants and their expert have several patents where the claims require “substantially constant” voltage or current. *Id.* at 10 (citing U.S. Patent Nos. 7,319,620 and 7,133,307).

In its reply, with respect to Plaintiff’s arguments that circuits with “substantially constant” voltage or current are different than circuits that are designed to vary, Defendants contend that the claims and specification do not provide any guidance to “differentiate a ‘substantially constant’ value from a variable one.” Reply at 5. With respect to Plaintiff argument that the “substantially constant” requirement is meant to account for real-world tolerances, Defendants contend that because all circuits are “subject to temperature drift, process variation, and noise[,]” then “the scope of the claims turns on the capabilities of the designer, the fabrication node, or even the quality of the test equipment—none of which are grounded in the intrinsic record.” *Id.* With respect to Plaintiff’s argument that Defendants and their expert have patents that have “substantially constant” claim language, Defendants contend that this “argument fails because the definiteness inquiry turns on the intrinsic record of *this* patent, not extrinsic evidence of unrelated patents drafted at different times for different inventions and examined based on different records.” *Id.* at 5–6 (emphasis in Defendants’ brief).

In its sur-reply, Plaintiff contends that

> [T]he claims of the '962 patent do not require circuits that output a specific voltage or current within some tolerance but rather require circuits that maintain "substantially constant" voltage or current in contrast to those that vary. [Defendants'] Reply fails to contend with this argument, and with good reason because case law establishes this is a permissible and not-indefinite use of "substantially constant."

Sur-Reply at 3 (citing *Polaris PowerLED Techs., LLC v. VIZIO, Inc.*, No. CV 23-3478-GW-PDx, 2024 U.S. Dist. LEXIS 84065, at *16 (C.D. Cal. May 8, 2024), internal citations omitted). Plaintiff otherwise contends that none of Defendants' arguments demonstrate that this term is indefinite, and that it should be given its plain-and-ordinary meaning. *Id.*

<u>The Court's Analysis:</u>

After reviewing the parties' arguments and considering the applicable law, the Court agrees with Plaintiff that the term is not indefinite. More specifically, the Court agrees with Plaintiff that a POSITA would understand that tolerances in electrical components, environmental factors, and other non-idealities, *e.g.*, temperature, noise, hysteresis, parasitic effects, process variation, *etc.*, may cause slight variations in the voltage or current. These real-world non-idealities may cause the claimed voltage or current to slightly vary from its designed voltage or current. But not only are these types of non-idealities are well-known and well-understood, a POSITA would understand what effect they have on the circuit design and would be easily able to design the circuits to account for these non-idealities and still operate as intended.

For at least this reason, the Court concludes that Defendants have not provided clear and convincing evidence that this term is indefinite.

Construction: Because the "heavy presumption" is that terms should be construed according to their plain-and-ordinary meaning and because Defendants does not allege

lexicography or disclaimer, which are the only two exceptions to the general rule that a term should be construed as having its plain-and-ordinary meaning, the Court concludes that the term should be construed as having its plain-and-ordinary meaning. *Azure Networks*, 771 F.3d at 1347; *Thorner*, 669 F.3d at 1365.

Therefore, for the reasons described above, the Court finds that the term is not indefinite and should be construed according to its plain-and-ordinary meaning.

C. Term #3: "feedback means for maintaining a voltage at a gate of a feedback transistor substantially constant"

Term	Plaintiff's Proposed Construction	Defendants' Proposed Construction
#3: "feedback means for maintaining a voltage at a gate of a feedback transistor substantially constant" U.S. Patent No. 8,148,962, Claim 14 Proposed by Defendants	35 U.S.C. § 112, ¶6 **Function:** maintaining a voltage at a gate of a feedback transistor substantially constant **Structure:** feedback circuit 331 of Fig. 3 (including differential amplifier 333 and transistor 332), feedback circuit of Fig. 4 (including differential amplifier 433 and transistor 432), feedback circuit 531 of Fig. 5 (including differential amplifier 533 and transistor 532), feedback circuit 631 of Fig. 6 (including differential amplifier 633 and transistor 632) and equivalents, as described and shown at 5:52-57, 7:19-21, 8:46-60; 10:13-16, Figs. 3, 4, 5, and 6.	35 U.S.C. §112, ¶6 applies. **Function:** maintaining a voltage at a gate of a feedback transistor substantially constant **Structure:** Feedback circuit arranged as shown in Figure 3, element 331 including differential amplifier 333, voltage divider 336, and feedback transistor 332. Feedback circuit arranged as shown in Figure 4, including differential amplifier 433, voltage divider 436, and feedback transistor 432. Feedback circuit arranged as shown in Figure 5, element 531 including differential amplifier 533, voltage divider 536, and feedback transistor 532. Feedback circuit arranged as shown in Figure 6, element 631 including differential amplifier 633, voltage divider 636, and feedback transistor 632.

The Parties' Positions:

The parties agree that this term is subject to § 112, ¶ 6 and what the claimed function is. Opening at 14; Response at 10. The only dispute between the parties is whether voltage dividers 336, 436, 536, and 636 should be included in the corresponding structure; Defendants contend that they should be while Plaintiff contends they should not. Opening at 14; Response at 11.

Defendants contend that the specification describes that "[f]eedback circuit 531 is operative to maintain a voltage at a gate of feedback transistor 532 substantially constant. To do so, feedback circuit 531 includes differential amplifier 533 and voltage divider 536." *Id.* at 15 (quoting '962 Patent at 8:50–52). Based on that passage, Defendants contend that the specification "clearly states that the voltage divider is required for the claimed function, and does not describe any structure for performing the recited function without a voltage divider." *Id.*

Defendants contend that voltages dividers are also present in Figures 3, 4, and 6 as elements 336, 436, and 636, respectively. *Id.* Defendants contend that a POSITA would understand those elements "contribute[] to the claimed function in the same way as described with reference to Figure 5." *Id.* (citing Dkt. No. 58-1 (Baker Decl.) at ¶¶ 62–64).

In its response, Plaintiff contends that § 112, ¶ 6 does not permit "incorporation of structure from the written description beyond that necessary to perform the claimed function." Response at 11 (quoting *Micro Chem., Inc. v. Great Plains Chem. Co.*, 194 F.3d 1250, 1258 (Fed. Cir. 1999)). Plaintiff contends that, here, a voltage divider is not necessary corresponding structure to perform the claimed function of "maintaining a voltage at a gate of a feedback transistor substantially constant." *Id.* at 12. Rather, in the context of Figure 5, Plaintiff contends that voltage divider 536 simply divides the voltage while the differential amplifier 533 performs

the claimed function. *Id.* at 12–13. Plaintiff contends that while the voltage divider "enables the differential amplifier in Figure 5 to perform the claimed function as described," it is "not a necessary part of the structure to perform the claimed function and should not be included as part of the structure under Section 112, ¶ 6." *Id.* at 13.

Plaintiff contends that Figures 3, 4, and 6 "do not even discuss a voltage divider as part of the feedback circuit or require that a proportional feedback voltage be used in order for a differential amplifier to perform the function of maintaining a voltage at a gate of a feedback transistor substantially constant." *Id.* (citing Dkt. No. 81-1 (Dorney Decl.) at ¶ 69).

Plaintiff summarizes that "[b]ecause the '962 patent does not require the use of a voltage divider and proportional feedback to the differential amplifier in every embodiment, that structure is not necessary to perform the claimed function and should be excluded from the structure under Section 112, ¶ 6." *Id.* at 13–14.

In its reply, Defendants contend that Plaintiff admits that the "the differential amplifier receives two inputs and compares them '*in order to perform this [claimed] function*.'" Reply at 6 (quoting Response at 12 (emphasis in Defendants' brief)). Defendants contend that Plaintiff further admits that the voltage divider provides one of the two inputs to the differential amplifier. *Id.* Defendants contend that "[w]ithout the voltage divider, the differential amplifier would not have one of its two inputs, and thus would be unable to perform the claimed function." *Id.* Based on that, Defendants contend that the voltage divider is necessary structure and Plaintiff's brief concedes as much. *Id.* at 6–7.

Defendants contend that every disclosed embodiment includes a voltage divider, whether or not the specification discusses it. *Id.* at 7.

In its sur-reply, Plaintiff contends that the differential amplifier performs the claimed function and that a voltage divider is "not *necessary* to perform the agreed function of 'maintaining a voltage at a gate of a feedback transistor substantially constant[.]'" Sur-Reply at 4 (emphasis in Plaintiff's brief). Plaintiff contends that the specification describes that "the differential amplifier as '***adapted to receive*** . . .a feedback voltage ***proportional to a voltage across the drain and source terminals of feedback transistor***' does not require that any differential amplifier be so adapted such that a voltage divider is necessary." *Id.* (quoting '962 Patent at 8:53–56 (emphasis added); citing Dkt. No. 81-1 (Dorney Decl.) at ¶ 65).

With respect to Defendants' argument that the voltage divider provides one of the two inputs to the differential amplifier, Plaintiff contends that by Defendants' logic "every connected component of the circuit would be 'necessary' which is not what Section 112 requires." *Id.* at 4–5.

<u>The Court's Analysis:</u>

After reviewing the parties' arguments and considering the applicable law, the Court agrees with Defendants that the voltage divider should be included as corresponding structure for the reasons that follow. ***First***, the specification, in reference to Figure 5, describes that "[d]ifferential amplifier 533 is adapted to receive, at input 535, ***a feedback voltage proportional to a voltage across the drain and source terminals of feedback transistor 532***, and compare the feedback voltage to a reference voltage received at input terminal 534." '962 Patent at 8:52–56 (emphasis added). Contrary to Plaintiff's assertion that this passage "does not require that any differential amplifier be so adapted such that a voltage divider is necessary," Figure 5 depicts that the voltage divider is the component that generates the feedback voltage, which is "proportional to a voltage across the drain and source terminals of feedback transistor 532." '962

Patent at 8:52–55. In other words, without voltage divider 536, differential amplifier 533 would **not** receive a voltage that is (1) a feedback voltage and (2) proportional to a voltage across the drain and source terminals of feedback transistor 532.

Voltage dividers 336, 436, and 636 in Figures 3, 4, and 6 likewise create a feedback voltage proportional to a voltage across the drain and source terminals of feedback transistors 332, 432, and 632, respectively.

Second, without voltage divider 336, there is no structure in Figure 3 to provide information about the output voltage of feedback transistor 332, *i.e.*, V_{sd}, to differential amplifier 333. Without that information, differential amplifier 333 will not be able to keep the gate of feedback transistor 332 "substantially constant." More specifically, if V_{sd} increases, then the voltage at input 335 of differential amplifier 333 increases (by the factor R2 / (R1 + R2)). A differential amplifier amplifies the difference between its inputs. As the voltage at input 335 increases, the output of differential amplifier 333 increases, *i.e.*, the voltage at gate 337 of feedback transistor 332 increases. But an increase in the voltage at gate 337 tends to decrease the current through feedback transistor 332. To maintain the current in first current path 375, the voltage drop across current source 321 increases. As that voltage drop increases, V_{sd} decreases by the same amount.

If V_{sd} decreases, then the voltage at input 335 of differential amplifier 333 decreases (by the factor R2 / (R1 + R2)). As the voltage at input 335 decreases, the output of differential amplifier 333 decreases, *i.e.*, the voltage at gate 337 of feedback transistor 332 decreases. But a decrease in the voltage at gate 337 tends to increase the current through feedback transistor 332. To maintain the current in first current path 375, the voltage drop across current source 321 decreases. As that voltage drop decreases, V_{sd} increases by the same amount.

As shown by the interaction of output of feedback transistor 332, voltage divider 336, and differential amplifier 333, voltage divider 336 (and voltages dividers 436, 546, and 636 in Figures 4, 5, and 6, respectively) is necessary structure for the differential amplifier to "maintain[] a voltage at a gate of a feedback transistor substantially constant[.]"

Therefore, for the reasons described above, the Court adopts Defendants' corresponding structure, which includes voltage dividers 336, 436, 536, and 636.

D. Term #4: "first current supply means for supplying to a second current path referenced to said input a first current that is substantially constant"

E. Term #5: "second current supply means . . . for receiving a first voltage reference and a second voltage reference and for supplying a second current to said second current path with a magnitude based on said first voltage reference and said second voltage reference"

Term	Plaintiff's Proposed Construction	Defendants' Proposed Construction
#4: "first current supply means for supplying to a second current path referenced to said input a first current that is substantially constant" U.S. Patent No. 8,148,962, Claim 14 Proposed by Defendants	35 U.S.C. § 112 ¶6 **Function:** supplying to a second current path referenced to said input a first current that is substantially constant **Structure:** first current source 322 of Fig. 3, first current source 422 of Fig. 4, first current source 522 of Fig. 5, first current source 622 of Fig. 6, and equivalents, as described and shown at 6:25-41; 7:52-61; 8:61-9:8; 10:63-11:3, Figs. 3, 4, 5, 6.	35 U.S.C. §112, ¶6 applies. **Function:** supplying to a second current path referenced to said input a first current that is substantially constant **Structure:** Current source shown in Figure 5 element 522, including master transistor 521 and slave transistor 523. Current source shown in Figure 6 element 622, including transistor 672 whose gate is connected to a bias voltage and whose drain is connected to a second current path.
#5: "second current supply means . . . for receiving a first voltage reference and a second voltage reference and for supplying a second	35 U.S.C. § 112 ¶6 **Function**: receiving a first voltage reference and a second voltage reference and	35 U.S.C. §112, ¶6 applies. **Function**: receiving a first voltage reference and a second voltage reference and

current to said second current path with a magnitude based on said first voltage reference and said second voltage reference" U.S. Patent No. 8,148,962, Claim 14 Proposed by Defendants	for supplying a second current to said second current path with a magnitude based on said first voltage reference and said second voltage reference **Structure**: second current source 340 of Fig. 3, second current source 440 of Fig. 4, second current source 540 of Fig. 5, second current source 640 of Fig. 6, and equivalents, as described and shown at 6:42-62; 7:62-8:17; 9:40-54; 10:40-53, Figs. 3, 4, 5, 6.	for supplying a second current to said second current path with a magnitude based on said first voltage reference and said second voltage reference **Structure**: Variable current source as shown in Figure 5, element 540 including replica transistor 542 whose gate is coupled to the gate of feedback transistor 532 and whose drain is coupled to output node 560. Variable current source as shown in Figure 6 element 640, including replica transistor 642 whose gate is coupled to the gate of feedback transistor 632 and whose drain is coupled to output node 660.

<u>The Parties' Positions:</u>

The parties agree that this term is subject to § 112, ¶ 6 and what the claimed function is. Opening at 14; Response at 10. The parties dispute whether first current source 322 and the second current source 340 in Figure 3 and first current source 422 and the second current source 440 in Figure 4 should be included in the corresponding structure; Defendants contend that they should not be while Plaintiff contends they should. Opening at 16–17; Response at 15.

Defendants contend that the first current source 322 and the second current source 340 in Figure 3 and first current source 422 and the second current source 440 in Figure 4 are "black box" elements. Opening at 17–18. Defendants contend that, by contrast, Figures 5 and 6 "illustrate the internal components of these current supplies." *Id.* 17, 18–19 Defendants contend that the Federal Circuit has "consistently held that 'purely functional language'—without

adequate disclosure of structure—'is insufficient to provide the required corresponding structure' for a means-plus-function claim element." *Id.* (quoting *Noah Sys., Inc. v. Intuit Inc.*, 675 F.3d 1302, 1317 (Fed. Cir. 2012). Based on that, Defendants contend that "[i]t is therefore inappropriate to identify a 'black box' that describes only the claimed function as the structure for a means-plus-function term." *Id.* (citing *ePlus, Inc. v. Lawson Software, Inc.*, 700 F.3d 509, 518 (Fed. Cir. 2012)).

In its response, Plaintiff contends that "[b]ecause the '962 patent's disclosure of a current source connotes structure to one of ordinary skill, the disclosed current sources (and their equivalents) should be included as part of the structure for these terms." Response at 15 (citing Dkt. No. 81-1 (Dorney Decl.) at ¶¶ 71–73).

With respect to Defendants' argument that first current source 322 and the second current source 340 in Figure 3 and first current source 422 and the second current source 440 in Figure 4 are "black box" elements, Plaintiff contends that current source is not a "'black box' computer-implemented device that requires an algorithm as in [Defendants'] cited case law." *Id.* Rather, Plaintiff contends that a POSITA would understand that "current source" refers to a particular class of structures," which can be implemented in a number of ways. *Id.*

In its reply, Defendants contend that the current sources in Figures 3 and 4 merely restate the function, which is improper. Reply at 7 (citing *Spa Syspatronic AG v. United States*, 117 Fed. Cl. 375, 390 (2014)). In particular, Defendants contend that the specification describes that "first current source 322 *functions* to pull up a current . . . while second current source 340 *is operative to* pull down a current . . . first current source 322 and second current source 340 are arranged to supply current to a single current path." *Id.* at 7–8 (quoting '962 Patent at 6:25–33 (emphasis in Defendants' brief)).

Defendants contend that the "requirement to identify sufficiently definite structure applies to all means-plus-function claims." *Id.* at 8 (citing *Biomedino, LLC v. Waters Techs. Corp.*, 490 F.3d 946, 952 (Fed. Cir. 2007)).

Defendants contend that "current source" is merely a generic label for a broad class of devices, and the Federal Circuit has "squarely rejected such attempts to substitute functional abstractions for actual disclosed structure." *Id.* at 8–9 (citing cases).

In its sur-reply, Plaintiff contends that Defendants not only do not dispute that "current source" "denotes a particular class of structures[,]" but admit that "current source" is a "generic label for a broad class of devices." Sur-Reply at 6. Plaintiff contends that § 112, ¶ 6 only requires identification of structure. *Id.* Plaintiff finally contends that "[t]here is nothing 'functional' about a term that inherently connotes structure even if it is a broad class of structures." *Id.*

The Court's Analysis:

After reviewing the parties' arguments and considering the applicable law, the Court agrees with Plaintiff that first current source 322 and the second current source 340 in Figure 3 and first current source 422 and the second current source 440 in Figure 4 should be included in the corresponding structure for the reasons that follow. ***First***, the Court agrees with Plaintiff that "current source" is not a "black box," but rather denotes a particular class of structure that can be implemented in a number of ways. Dkt. No. 81-1 (Dorney Decl.) at ¶ 72.

Second, by arguing that the current sources in Figures 3 and 4 are "black box" elements that should excluded from the corresponding structure, while also arguing that the current sources in Figures 5 and 6 should be included because they "illustrate the internal components of these current supplies," Defendants, in essence, argue that the current sources in Figures 3 and 4 need more implementation details. But description of implementation details of corresponding

structure is unnecessary. *Intel Corp. v. VIA Techs., Inc.*, 319 F.3d 1357, 1366–1367 (Fed. Cir. 2003) ("In the present case, how to modify the core logic to perform Fast Write on the circuitry level may also be properly left to the knowledge of those skilled in the art, and need not be specified in the patent.").

Therefore, for the reasons described above, the Court adopts Plaintiff's corresponding structure, which includes first current source 322 and the second current source 340 in Figure 3 and first current source 422 and the second current source 440 in Figure 4.

F. Term #6: "layout for the USB port is different from layout of the I/O port"

Term	Plaintiff's Proposed Construction	Defendants' Proposed Construction
#6: "layout for the USB port is different from layout of the I/O port" U.S. Patent No. 8,327,051, Claim 24 Proposed by Defendants	Plain and ordinary meaning	"USB port and I/O port having different physical and electrical arrangements"

<u>The Parties' Positions:</u>

The dispute between the parties is whether a different "layout" requires having "different physical and electrical arrangements," which is Defendants' position, or only "different physical arrangements," which is Plaintiff's position. Response at 16; Reply at 9.

Defendants contend that the specification describes that when the memory card is inserted, "the mating USB port of the host device is electrically connected to the USB port of the memory card," so that "the SD port and/or the USB port of the memory card may be electrically connected to a mating SD port and/or a mating USB port of the host device, respectively." Opening at 21 (quoting '051 Patent at 4:61–5:3).

Defendants contend that during prosecution "both the patentee and the examiner treated the arrangement of the 'ports'—and therefore the 'layout'—as defined by the combination of physical placement and electrical connectivity." *Id.* More specifically, Defendants contend that

> when the patentee introduced a dependent claim reciting that the "layout for the USB port is different from layout of the I/O port," he pointed to Figure 2 as depicting distinct "pin layouts," noted that the USB port "includes serial data pins D+ and D-," and explained that the USB pins are not electrically connected when operating in the I/O mode. Thus, the patentee relied on Figure 2's physical and electrical differences as disclosing a different "layout," confirming that the claim term must encompass both.

Id. (citing Opening, Ex. 13 ('051 File History, 2/23/11 Response) at 7–8). Furthermore, Defendants contend that Applicant distinguished prior art by identifying differences in the "electrical connection." *Id.* at 21–22.

Defendants contend that "[t]he examiner ultimately allowed the claims, finding the prior art failed to disclose 'a memory card with a plurality of *unique position ports*.'" *Id.* (citing Opening, Ex. 13 ('051 File History, 8/7/12 Notice of Allowance) at 2).

In its response, Plaintiff contends that Defendants do not argue lexicography, disclaimer, or disavowal. Response at 16. Plaintiff contends that the Court should reject Defendants' proposed construction because "(1) the patentee did not describe the layout as including the electrical arrangement; (2) even if layout did refer to both physical and electrical arrangements (it does not), the claim does not require *both* different physical arrangements and different electrical arrangements." *Id.* (emphasis in Plaintiff's brief).

In its reply, Defendants contend that, during prosecution, Applicant "argued that the alleged invention's pins could mate with their counterpart port 'without any electrical connection.' If a different physical arrangement was sufficient, the patentee would not have

needed to rely on both physical positioning and 'electrical connection' to overcome the rejection." Reply at 9 (citing Opening, Ex. 13 at 8–9).

In its sur-reply, Plaintiff contends that Defendants do not argue lexicography, disclaimer, or disavowal. Sur-Reply at 6. Plaintiff contends that Defendants' arguments regarding Figure 2 and the asserted art "merely reflect that the physical arrangement of the port may enable electrical connectivity when mating with a compatible physical arrangement." *Id.* at 7.

The Court's Analysis:

After reviewing the parties' arguments and considering the applicable law, the Court agrees with Plaintiff that this term should be construed according to its plain-and-ordinary meaning for the reasons that follow. ***First***, the "heavy presumption" is that terms should be construed according to their plain-and-ordinary meaning. *Azure Networks*, 771 F.3d at 1347.

Second, the only two exceptions to the general rule that a term should be construed as having its plain-and-ordinary meaning are lexicography and disclaimer. *Thorner*, 669 F.3d at 1365. Defendants do not allege lexicography but do allege that the patentee disclaimed claim scope by arguing that a "different" "layout" includes both "different physical and electrical arrangements" in order to distinguish prior art, and not just different physical arrangements. Opening at 21–22, Reply at 9.

The Court concludes that the patentee did not make a disclaimer during prosecution. "For a statement during prosecution to qualify as a disavowal of claim scope, it must be 'so clear as to show reasonable clarity and deliberateness,' and 'so unmistakable as to be unambiguous evidence of disclaimer.'" *Genuine Enabling Tech.*, 29 F.4th at 1374 (quoting *Omega Eng'g*, 334 F.3d at 1325). "To disavow claim scope, the specification must contain expressions of manifest exclusion or restriction, representing a clear disavowal of claim scope." *Retractable Techs., Inc.*

v. Becton, Dickinson & Co., 653 F.3d 1296, 1306 (Fed. Cir. 2011) (internal quotation marks omitted).

The Court has reviewed the prosecution statements that Defendants cite and conclude that those statements fall well short of the clear and unmistakable standard for disclaimer. With respect to Defendants' argument that Applicant "explained that the USB pins are not electrically connected when operating in the I/O mode[,]" the prosecution statement Defendants cite only describes that ***one*** USB pin (USB port 102) is not connected. Opening at 21 (citing Opening, Ex. 13 ('051 File History, 2/23/11 Response) at 7–8). The Court concludes that Defendants' argument that Applicant made a disclaimer based on the fact a single USB pin is ***not*** connected falls well short of the clear and unmistakable standard.

With respect to the Son prior art reference, Applicant then argued that Claim 8 allowed for greater flexibility as "pins for the I/O port ***need not be included*** as a pin for the USB port." Opening, Ex. 13 ('051 File History, 2/23/11 Response) at 8 (emphasis added). Just because the pins for the I/O port ***need not be*** included, that is not the same as the pins for the I/O port ***are not*** included or ***must not*** be included. As such, because the pins for the I/O port could be included, the electrical arrangement does not necessarily need to be different as well, and these prosecution statements are not a clear and unmistakable disclaimer.

Third, with respect to Defendants argument that the specification describes that "the SD port and/or the USB port of the memory card may be electrically connected to a mating SD port and/or a mating USB port of the host device, respectively[,]" the Court concludes that adopting Defendants' proposed construction based on this passage from the specification would improperly limit the claim term to a disclosed embodiment. '051 Patent at 5:50–52; *Liebel-Flarsheim*, 358 F.3d at 913 ("[I]t is improper to read limitations from a preferred embodiment

described in the specification—even if it is the only embodiment—into the claims absent a clear indication in the intrinsic record that the patentee intended the claims to be so limited.”). Furthermore, this passage only recites that the “the SD port and/or the USB port of the memory card ***may be*** electrically connected to a mating SD port and/or a mating USB port of the host device, respectively.” ’051 Patent at 5:50–52 (emphasis added). The use of “may be” indicates that this electrical connection is permissive, not required.

Therefore, for the reasons described above, the Court finds that the term should be construed according to its plain-and-ordinary meaning.

G. Term #7: “information identifying a location associated with a variation of the structure”

Term	Plaintiff’s Proposed Construction	Defendants’ Proposed Construction
#7: “information identifying a location associated with a variation of the structure” U.S. Patent No. 8,996,838, Claims 1, 12 Proposed by Defendants	Plain and ordinary meaning	“information identifying where a structural variation through tapering begins”

<u>The Parties’ Positions:</u>

The parties dispute two aspects of Defendants’ proposed construction: whether the (1) “variation of the structure” is limited to a taper and (2) “location” must identify where the “variation” begins. Reply at 9.

Defendants contend that the term should be construed to “provide[] clarity to the term and [to] assist the jury.” Opening at 22.

With respect to the former, Defendants contend that the specification "'repeatedly and consistently' describes the 'variation of the structure' as a variation through tapering." *Id.* at 23 (citing '838 Patent at 2:3–4, 5:12–13, 12:26–28, 14:19–20).

With respect to the latter, Defendants contend that the specification "consistently and repeatedly describes the 'location associated with a variation of the structure' as being where the tapering of the structure begins." *Id.* (citing '838 Patent at 12:29–31, 12:33–35, 2:13–16). Defendants further contend that Figure 2 is illustrative of all embodiments that the "location" identifies where the tapering begins. *Id.* at 23–24 (citing '838 Patent at Figures 2, 4, 5).

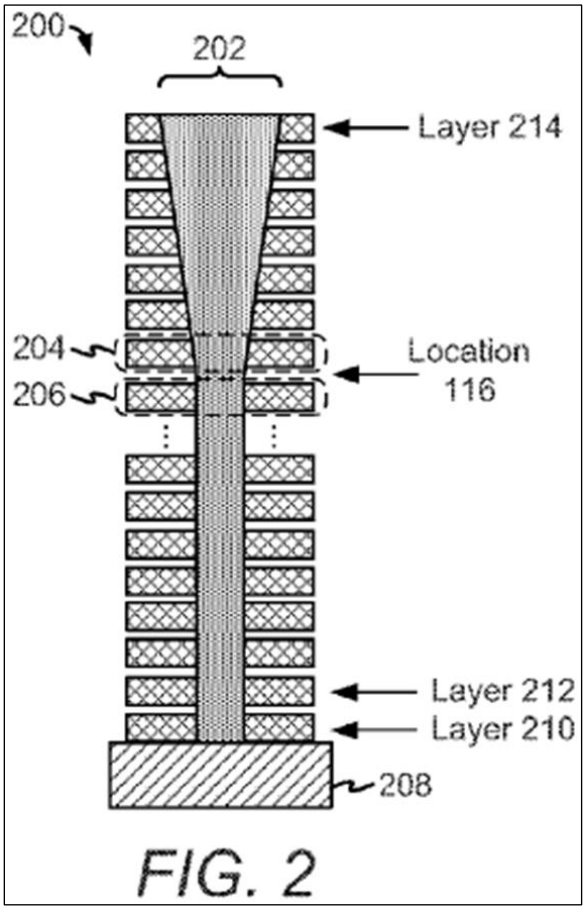

Defendants contend that the specification "proposes logically separating the device into two areas—one below where the taper begins, and one above where the taper begins." *Id.* at 24 (citing '858 Patent at 2:10–22). Defendants contend that "[b]y splitting the memory into two

logical areas, the parameters can be assigned to account for the different width of the pillar above and below the location where tapering begins, improving performance of the memory device as a whole." *Id*. (citing '858 Patent at 9:17–58, 11:45–55). Defendants contend that the specification "contemplates splitting the device into only two logical areas based on the width of one pillar" and there is "only one choice for the 'location'," where a structural variation begins through tapering, that will solve the problem identified by the patent (width variations that affect device performance). *Id.*

Defendants contend that unasserted, dependent claims also support their contention that the location is whether the tapering begins. *Id.* More specifically, Defendants contend that "Claims 3, 5, and 6, which depend from claim 1, collectively describe a method by which to determine whether the claimed 'location' is in relationship to two identified memory layers." *Id.* at 25 (citing '838 Patent at 36:36–43, 36:50–58). Defendants contend that these claims require the use of a threshold, and whether the threshold is met. *Id.* Defendants contend that because the threshold is either satisfied or not, "[s]uch binary decision making is inconsistent with the existence of multiple claimed 'locations.'" *Id.* Defendants contend that "[s]ince the specification explains that the parameters vary based on where tapering begins, the 'location' identified in claims 3, 5, and 6 must be the 'location' where 'tapering' begins." *Id.*

In its response, Plaintiff contends that Defendants do not allege lexicography or disclaimer. Response at 17.

With respect to Defendants' argument that the specification "repeatedly and consistently" describes that "variation of structure" refers to variation through tapering, Plaintiff contends that it is improper to import limitations from an embodiment. *Id.* (citing cases). Plaintiff contends that the specification does not characterize the invention as requiring variation through tapering but

rather describes tapering as one type of variation in structure. *Id.* at 17–18 (citing '838 Patent at 2:3–4, 5:12–13, 12:26–28, 14:19–20). Plaintiff contends that the specification also describes "'variation of[/in] a structure' without reference to 'tapering[.]'" *Id.* at 18–19 ('838 Patent at Figures 7, 9, 10, 11; 5:4–7, 5:15–17, 5:60–67, 6:13-16, 9:51–54, 10:33–35, 11:52–54, 21:50–53, 22:4–6). Plaintiff contends that "everywhere the '838 patent refers to tapering it explicitly identifies it as an example or illustrative of a variation of structure." *Id.* at 19 (citing '838 Patent at 9:22–24, 12:24–26, 14:19, 15:4, 20:58–60, 30:62–65; Dkt. No. 81-1 (Dorney Decl.) at ¶ 75). Plaintiff finally contends that the specification "explicitly provides for other shapes[,]" *e.g.*, a declined shape, a "lumped" or "jagged" shape, or another shape. *Id.* (citing '838 patent at 16:45–59).

With respect to Defendants' argument that "location" identifies where the "variation" begins, Plaintiff contends that the specification does not disclose a single location, but rather the specification teaches that "the location identifier 134 may determine locations of multiple variations for a single block of the memory 104" and "location 116 may correspond to an average location of variations of the columns 200, 404, and 406." *Id*. at 20 (citing '838 Patent at 20:40–45). Based on that, Plaintiff contends that the specification "expressly recognizes that the location of variations identified need not necessarily be where such variation 'begins' for all columns in order to perform the disclosed inventions." *Id.* (citing Dkt. No. 81-1 (Dorney Decl.) at ¶ 80).

With respect to Defendants' dependent claim argument, Plaintiff contends "[t]here that here is nothing in these dependent claims that requires the location to be where variation or variation through tapering begins." *Id.* (citing Dkt. No. 81-1 (Dorney Decl.) at ¶ 81). Plaintiff

contends that "[m]oreover, even if there were, these narrowing dependent claims would imply that the independent claims are broader and not so limited." *Id.*

In its reply, with respect to whether the "variation of the structure" must be a taper, Defendants contend that the specification describes that while tapering may begin at different heights for different pillar structures, "within each pillar, the 'variation of the structure' remains a taper." Reply at 10. With respect to Plaintiff's argument that the specification describes non-tapered shapes, such as "declined," "lumped," and "jagged," Defendants contend that the passage Plaintiff cites does not refer to the shape of the pillar structures, but rather the shape of an imaginary plane that connects the "locations of variations of structures." *Id.* With respect to Plaintiff's citation of passage that describes that the structure may have "another shape," Defendants contend that that passage actually "refers to how the structure tapers, not whether the structure is tapered[.]" *Id.* at 11 (citing '838 Patent at 31:3–10).

Defendants contend that the "flow charts of Figure 9, and the citations at 5:60-67 and 9:51-54 describe an algorithm for determining the location of a variation that operates to identify a location where tapering begins. *Id.* Defendants contend that the "flow charts of Figures 10 and 11, and the citations at 10:33-35, 11:52-54, 21:50-53, and 22:4-6 describe how the memory responds to the location of the variation, in a way that only makes sense if the location is where a structural variation through tapering begins." *Id.* Defendants contend that the "flow chart of Figure 7, and the citation to 6:13-16 refer to other aspects of the alleged invention, such as when the variation is determined and storing the location information, and thus do not need to describe the specific variation." *Id.* Defendants contend that the "citations to 5:4-7 and 5:15-17 skip key language describing the variation as a taper: the variation may correspond to a tapering' of the

structure." *Id.* (internal citations omitted). Defendants contend that "[n]owhere in the 38-column specification is the "variation" described as anything other than a taper." *Id.* at 12.

In its sur-reply, Plaintiff contends that this term does not require construction. Sur-Reply at 7. Plaintiff contends that Defendants do not allege lexicography or disclaimer. *Id.*

Plaintiff contends that "the '838 patent consistently and carefully sets forth a taper as *an example* of a variation of structure." *Id.* (emphasis in Plaintiff's brief). Plaintiff contends that Defendants' argument that all variations are tapers ignores that the specification describes that "e.g., tapering may decrease." *Id.* (quoting '838 Patent at 31:7–10).

With respect the passage that recites that shapes may be "a declined shape, a 'lumped' or 'jagged' shape, or another shape[,]" Plaintiff contends that "[i]f the locations of variations have a sharply uneven edge or surface or a harsh, rough, or irregular quality, it follows that the variation of the structure itself will have similar characteristics." *Id.* at 8. Plaintiff contends that the specification describes that "a structure may have another shape[,]" other than "conical" or "tapered[,]" and that the "tapering may decrease." *Id.* (quoting '838 Patent at 31:3–10). Plaintiff further contends that the specification describes that in some cases "tapering effects associated with the columns 200, 404, and 406 are non-uniform (e.g., have different profiles)" and "multiple different variations (e.g., 'taper' effects) of one or more structures extending through layers of the 3D memory 500." *Id.* at 9 (quoting '838 Patent at 20:40–43, 30:57–62). Based on this disclosure, Plaintiff contends that "it is wrong to limit the variation to simply a taper since the shape of the taper itself may change." *Id.* at 8–9.

With respect to the "location associated with the variation of the structure," Plaintiff contends that Defendants do not identify anything in the claims that requires where the claimed location must begin. *Id.* at 9. Plaintiff contends that while Defendants point to unasserted

dependent claims, these dependent claims "these dependent claims do not require that the location be where variation 'begins,' nor do they require that the layers or threshold are such that the location is where variation 'begins.'" *Id.*

Plaintiff contends that "[t]he invention contemplates multiple variations extending vertically which necessitates identifying more than just one location where the 'variation begins,' as [Defendants] would have it." *Id.* at 10.

With respect to the specification, Plaintiff contends that Defendants admit that the specification discloses an embodiment where the location is calculated as an "average." *Id.* (citing Reply at 12). Plaintiff contends that Defendants' "objective and stated purpose" argument is Defendants' attempt to import a limitation from the specification. *Id.* Plaintiff contends that "nothing in the patent or logic requires that the claimed location is the beginning of variation of the structure, whether through tapering or other variation." *Id.*

The Court's Analysis:

After reviewing the parties' arguments and considering the applicable law, the Court agrees with Plaintiff that this term should be construed according to its plain-and-ordinary meaning for the reasons that follow. ***First***, the "heavy presumption" is that terms should be construed according to their plain-and-ordinary meaning. *Azure Networks*, 771 F.3d at 1347. ***Second***, Defendants do not expressly allege lexicography or disclaimer, which are the only two exceptions to the general rule that a term should be construed as having its plain-and-ordinary meaning. *Thorner*, 669 F.3d at 1365.

Third, with respect to whether "variation of the structure" is limited to a taper, the Court agrees with Plaintiff that it is not. Defendants' argument is that the specification "repeatedly and consistently" describes that "variation of structure" refers to variation through tapering, but the

specification is not as clear as Defendants assert. For example, Defendants have not identified a single passage that shows that tapering is the only "variation of structure." Furthermore, several passages that Defendants cite refer tapering as an ***example*** of variation of structure. '838 Patent at 2:3–4 ("the region may have a variation, ***such as*** a 'tapered' profile"), 5:12–13 ("[t]he variation ***may correspond*** to a 'tapering' of the structure"), 12:24–26 ("The structure 202 may have a variation. ***For example***, as illustrated in the example of FIG. 2, the structure 202 ***may have*** a "conical or "tapered profile."), 14:19–20 ("FIG. 3 illustrates that a variation (***e.g.***, tapering) of a structure (e.g., the structure 202)"), 15:4 ("In the example of FIG. 4, a variation (***e.g.***, tapering) occurs"), 30:62–65 ("the 3D memory 500 may [have] multiple different variations (***e.g.***, 'taper' effects) of one or more structures extending through layers of the 3D memory 500.") (emphasis added to all).

With respect to Defendants' argument that the specification at 31:3–7 describes that "another shape" refers to how the structure tapers, the Court disagrees with Defendants' interpretation. The full context of that passage is:

> The structure 202 is illustrated as having a "conical" or "tapered" shape for illustration. However, a structure may have another shape. For example, depending on the particular fabrication process, a structure of a memory may increase in uniformity (e.g., tapering may decrease) with increased distance from a surface of a substrate of the memory.

'838 Patent at 31:5–10. The first sentence of this passage focuses on structures that are "conical" or "tapered." The second sentence expressly describes that there are non-conical and non-tapered shapes. The third sentence provides an example of those shapes ("tapering may decrease"). Defendants argument is that "tapering may decrease" indicates that "another shape" are other tapered shapes. But that interpretation is not consistent with the second sentence which expressly describes that there are other non-conical and non-tapered shapes. Rather, "tapering may

decrease" could refer to a structure where tapering decreases so much that the bottom of the structure is slightly wider than at its narrowest width, *i.e.*, slight reverse tapering.

Therefore, the Court concludes that the specification does not "repeatedly and consistently" describes that "variation of structure" refers to variation through tapering but does "repeatedly and consistently" describes that tapering is ***one example*** of "variation of structure."

Fourth, with respect to whether "location" identifies where the "variation" begins, the Court agrees with Plaintiff that it does not for several reasons. The claims do not require that the location identifies where the "variation" begins. Rather, the language of Claims 1 and 12 are broader than that as they only require that the "location [is] ***associated*** with a variation of the structure."

Relatedly, even if Defendants are correct that the dependent claims require that the "location" identifies where the "variation" begins, according to the principle of claim differentiation, a limitation in the dependent claims is not present in the independent claims. *Phillips*, 415 F.3d at 1314 ("[T]he presence of a dependent claim that adds a particular limitation gives rise to a presumption that the limitation in question is not present in the independent claim."). Therefore, adopting Defendants' proposed construction to require that the "location" identifies where the "variation" begins would violate the principle of claim differentiation.

The specification does not support Defendants' proposed construction. In particular, the specification describes a situation where there are multiple columns with variations and that the location may correspond to the average location of variations of the multiple columns. '838 Patent at 20:40–45. In the situation where the average location is in the middle of where the variations for each column begin, then the average location—which only needs to be "associated

with a variation of the structure"—may not identify where the tapering begins for any of the multiple columns.

Therefore, for the reasons above, the Court concludes there is no support in the intrinsic evidence for Defendants' proposed construction regarding that the location identifies where the "variation" begins.

Therefore, for the reasons described above, the Court finds that there is no reason to depart from the plain-and-ordinary meaning, so the Court adopts plain-and-ordinary meaning as its construction.

H. Term #8: "the second shape being different from the first shape" / "the second shape being different to the first shape"

Term	Plaintiff's Proposed Construction	Defendants' Proposed Construction
#8: "the second shape being different from the first shape" / "the second shape being different to the first shape" U.S. Patent No. 9,524,974, Claims 1, 12 Proposed by Defendants	Plain and ordinary meaning	"the second shape having a different geometric profile than the first shape"

<u>The Parties' Positions:</u>

Defendants contend that Plaintiff "attempts to avoid construction to preserve an infringement argument that the same shape having different dimensions would constitute 'different' shapes." Opening at 26.

Defendants contend that the claims support their proposed construction. *Id.* More specifically, Defendants contend that "dependent claim 11's requirement that the trenches have different 'depths'—with no indication that depth is a species of shape—illustrates that the

patentee understood 'shape' to mean something different than 'depth' alone." *Id.* (citing *Phillips*, 415 F.3d at 1314).

Defendants contend that the specification also supports their proposed construction. *Id.* More specifically, Defendants contend that Figure 5 depicts that "first trenches T1 and second trenches T2 having distinct geometric profiles." *Id.* at 26–27.

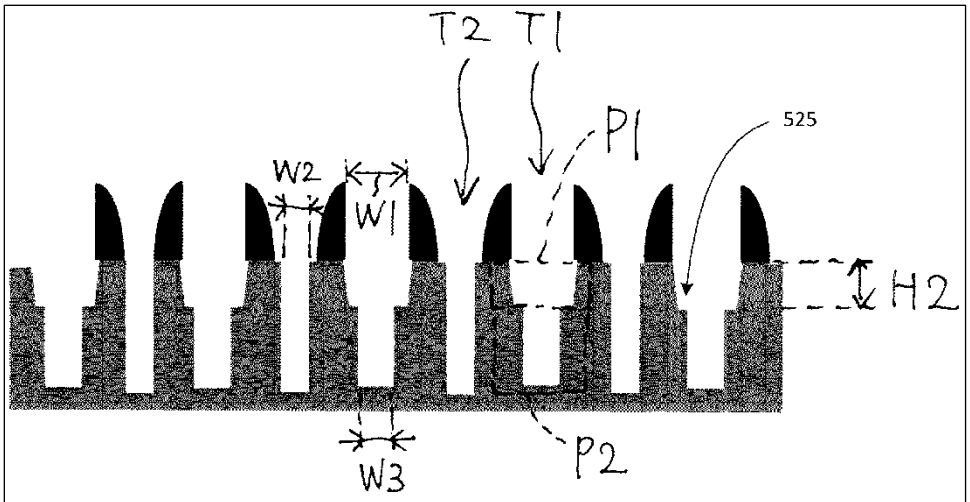

FIG. 5

Defendants contend that the specification also supports their proposed construction. *Id.* at 27. More specifically, Defendants contend that Applicant amended Claims 1 and 12 to require "the second shape being different from[/to] the first shape." *Id.* (citing Opening, Ex. 14 ('974 File History, 8/22/16 Claim Amendments) at 2, 4). Defendants contend that Applicant then argued that "trenches 25 and 26 of Min's Figure 1G … appears 'to have the same shape,' despite trench 25 being narrower than trench 26." *Id.* (citing U.S. Patent No. 8,247,291 (Min) at Figure 1G).

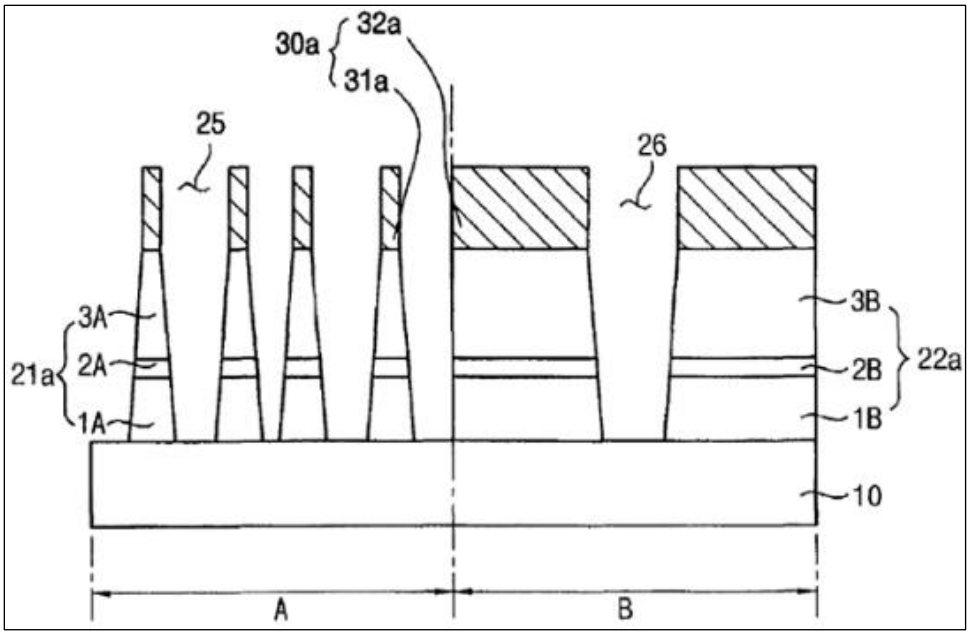

Defendants contend that "[i]n other words, [Applicant] argued that two trenches having the same geometric profile but different dimensions has 'the same shape.'" *Id.*

In its response, Plaintiff contends that the words "geometric profile" or "geometric" appear in the specification. Response at 21. Plaintiff contends that Defendants do not argue for argue for lexicography, disclaimer, or disavowal. *Id.*

Plaintiff contends that Defendants' proposed construction seeks to construe "shape," which is "readily understood by a juror and does not require construction" and replace it with "geometric profile," which is "vague and confusing." *Id.* (citing cases). Plaintiff contends that "[w]hile a juror will understand what it means for two shapes to be different, phrases like 'geometric profile' are abstract in nature and may be difficult to comprehend." *Id.*

Plaintiff contends that "nothing in the claim language that suggests the patentee sought to use the word "shape" in anything other than its plain and ordinary meaning[.]" *Id.* (citing Dkt. No. 81-1 (Dorney Decl.) at ¶ 84). Plaintiff contends that dependent Claim 11's "requirement that the first and second trenches have different depths indicates only that claim 11 narrows claim 1's

requirement for different shapes to require a difference in depth, as opposed to (or in addition to) some other difference in shape, such as width or geometric profile." *Id.* at 21–22 (citing Dkt. No. 81-1 (Dorney Decl.) at ¶ 84).

Plaintiff contends that "[n]othing in the specification suggests that the '974 patent sought to exclude the full scope of different shapes." *Id.* at 22. Plaintiff contends that Defendants' proposed construction improperly includes limitations from the disclosed embodiments. *Id.* (citing *Liebel-Flarsheim*, 358 F.3d at 913). Plaintiff contends that, by contrast, the specification teaches that using different shapes could result in an intentional air gap which could reduce capacitive coupling with nearby trenches, and that "[t]he same result could be achieved when the trenches differ in shape, whether that be in terms of height, width, or geometric profile." *Id.* (citing Dkt. No. 81-1 (Dorney Decl.) at ¶ 85).

Plaintiff contends that Defendants do not assert prosecution disclaimer or disavowal, but rather that the prosecution history "supports" their proposed construction. *Id.* Plaintiff contends that the prosecution history does not support Defendants' proposed construction. *Id.* More specifically, Examiner said that trenches 25 and 26 are the first and second trenches. *Id.* (citing Opening, Ex. 14 ('974 File History, 8/22/16 Claim Amendments) at 7). Plaintiff contends that Applicant said that "trenches 25 and 26 appear to have the same shape and are not in an alternating pattern as recited in claim 1." *Id.* (quoting Opening, Ex. 14 ('974 File History, 8/22/16 Claim Amendments) at 7). Plaintiff contends that Applicant's "ambiguous statement that the trenches 25 and 26 'appear to be the same shape' and decision to distinguish Min on other grounds cannot rise to the level of a disclaimer of the full scope of the different shape limitation." *Id.*

In its reply, Defendants contend that Plaintiff's "position—that two shapes are 'different' even when they share the same geometric profile—cannot be squared with the intrinsic record." Reply at 13.

Defendants contend that Plaintiff's position "runs counter to the specification." More specifically, Defendants contend that "[e]ach figure of the '974 Patent that depicts first trenches T1 and second trenches T2 exclusively shows distinct geometric profiles for each trench." *Id.* (citing '974 Patent at Figures 4D, 5, 6A, 7, 9A). Defendants further contend that the specification does not provide any examples where two shapes "share the same geometric profile are nonetheless described as 'different.'" *Id.*

Defendants contend that Plaintiff's position "contradicts the prosecution history." *Id.* Defendants contend that Applicant distinguished the Min prior art reference by arguing that "trenches 25 and 26 *appear to have the same shape* and are not in an alternating pattern as recited in claim 1." *Id.* (citing Opening, Ex. 14 ('974 File History, 8/22/16 Claim Amendments) at 8) (emphasis in Defendants' brief). Defendants contend that, during prosecution, Applicant "relied on the trenches having the same shape to distinguish prior art[,]" but now Plaintiff improperly attempts to recapture that scope by taking the position that those trenches would not "have the same shape." *Id.*

Defendants finally contend that while Applicant distinguished Min on two grounds, "[t]hat these were alternative arguments does not change their disclaimer effect." *Id.* at 14 (citing *Andersen Corp. v. Fiber Composites, LLC*, 474 F.3d 1361, 1374 (Fed. Cir. 2007)).

In its sur-reply, Plaintiff contends that Defendants' Reply "offers no new argument in support of its attempt to replace the readily-understandable term 'shape' with 'geometric profile' which has no basis in the intrinsic record." Sur-Reply at 11.

With respect to Defendants' argument that all embodiments depict "distinct geometric profiles," Plaintiff contends that argument improperly "read[s] limitations from a preferred embodiment absent a clear indication that the patentee intended to do so." *Id.*

With respect to Defendants' prosecution disclaimer argument, Plaintiff contends that "the observation that the trenches in Min[] ***appear*** to have the same shape cannot constitute a clear and unmistakable disclaimer in the context of the patentee's response." *Id.* (emphasis added).

The Court's Analysis:

After reviewing the parties' arguments and considering the applicable law, the Court agrees with Plaintiff that this term should be construed according to its plain-and-ordinary meaning for the reasons that follow. ***First***, the "heavy presumption" is that terms should be construed according to their plain-and-ordinary meaning. *Azure Networks*, 771 F.3d at 1347.

Second, the only two exceptions to the general rule that a term should be construed as having its plain-and-ordinary meaning are lexicography and disclaimer. *Thorner*, 669 F.3d at 1365. Defendants do not allege lexicography but do allege that the patentee disclaimed claim scope by arguing that Applicant distinguish the Min prior art reference by arguing that trenches 25 and 26 in the Min prior art reference have the same shape.

The Court concludes that Applicant's prosecution statement does not meet the clear and unmistakable standard necessary for disclaimer. More specifically, Min describes that the "first and second trenches 25 and 26 ***may*** have different widths at upper and lower portions thereof, respectively." U.S. Patent No. 8,247,291 (Min) at 11:65–67 (emphasis added). There is no disclosure in Min that Figure 1G in Min is drawn to scale such that trenches 25 and 26 are actually have different widths at upper and lower portions. Based on that uncertainty, the Court concludes that Applicant's statement that "trenches 25 and 26 ***appear to have*** the same shape" is

not a clear and unmistakable disclaimer. Opening, Ex. 14 ('974 File History, 8/22/16 Claim Amendments) at 8 (emphasis added).

Third, Defendants' proposed construction improperly attempts to limit the claim term to the disclosed embodiments. *Liebel-Flarsheim*, 358 F.3d at 913 ("[I]t is improper to read limitations from a preferred embodiment described in the specification—even if it is the only embodiment—into the claims absent a clear indication in the intrinsic record that the patentee intended the claims to be so limited.").

Fourth, the Court agrees with Plaintiff that dependent Claim 11's "requirement that the first and second trenches have different depths indicates only that claim 11 narrows claim 1's requirement for different shapes to require a difference in depth[.]" Response at 21–22.

Fifth, while "shape" is a well-understood word both to a POSITA and a lay jury, the Court agrees with Plaintiff that "geometric profile" is "vague and confusing," and may be difficult for a jury to apply. *Sulzer Textil A.G. v. Picanol N.V.*, 358 F.3d 1356, 1366 (Fed. Cir. 2004) ("The district court simply must give the jury guidance that can be understood and given effect by the jury once it resolves the issues of fact which are in dispute.").

Therefore, for the reasons described above, the Court finds that the term should be construed according to its plain-and-ordinary meaning.

I. Term #9: "alternating pattern"

Term	Plaintiff's Proposed Construction	Defendants' Proposed Construction
#9: "alternating pattern" U.S. Patent No. 9,524,974, Claims 1, 12 Proposed by Defendants	Plain and ordinary meaning	"[a] sequence wherein the first and the second trenches repeat every other"

The Parties' Positions:

Defendants contend that Plaintiff "attempts to avoid construction so it can argue that 'alternating' covers patterns that do not repeat every other instance." Opening at 27.

Defendants contend that the surrounding claim language for both Claims 1 and 12 require that the first and second trenches are arranged in an alternating pattern for Claim 1 or odd-even alternating pattern for Claim 12. *Id.* Based on that, Defendants contend that both "claims require a first (odd) trench followed by a second (even) trench, which is then followed by a first (odd) trench, such that the sequence of first and second trenches are repeated to form an alternating pattern." *Id.*

Defendants contend that the specification "describes an odd-even pattern: '*Trenches alternate between first and second types, T1 and T2, in an odd-even arrangement*, i.e. T1 trenches may be considered odd numbered and T2 trenches may be considered even numbered where trenches are numbered sequentially by physical location.'" *Id.* (citing '974 Patent at 9:35–40) (emphasis in Defendants' brief). Defendants contend that "the patent is uniform in its description and depiction that first trenches T1 and second trenches T2 *always* repeat every other along the same direction." *Id.* (citing '974 Patent at Figures 5, 8, 9A) (emphasis in Defendants' brief).

Defendants contend that the prosecution history shows that Applicant amended Claim 1 to require an alternating pattern "that alternates from first trench to second trench along a second direction that is perpendicular to the first direction" and Claim 12 to add "odd-even" before the first trenches and second trenches' alternating pattern and "along a direction that is perpendicular to the first direction such that two first trenches are separated by a second trench." *Id.* (citing Opening, Ex. 14 (8/22/16 Claim Amendments) at 2, 4).

Defendants contend that Applicant "distinguished the prior art by arguing that [prior art] Figure 1G 'does not show a pattern that alternates between trenches 25 and 26 along the cross section shown. Trenches 25 are located in area A (to the left) while trench 26 is located in area B (to the right).'" *Id.* at 29 (citing Opening, Ex. 14 (8/22/16 Applicant Remarks) at 7).

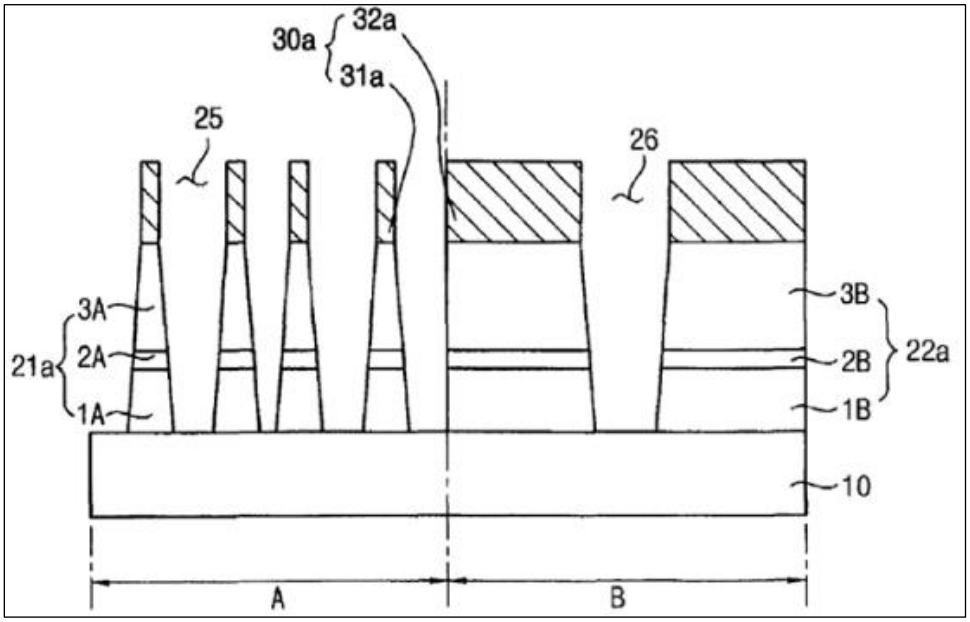

Defendants finally contend that dictionary definitions for "alternat[ing]" supports their proposed construction. *Id.* at 29–30 (citing dictionaries).

In its response, Plaintiff contends that Defendants ignore differences between Claims 1 and 12, namely, that the former recites "arranged in an alternating pattern[,]" while the latter recites "arranged in an **odd-even** alternating pattern[.]" Response at 24 (emphasis added). As such, Plaintiff contends that Defendants' proposed construction renders "odd-even" in the latter to be superfluous. *Id.* at 25 (citing *Comark Commc'ns., Inc. v. Harris Corp.*, 156 F.3d 1182, 1187 (Fed. Cir. 1998)).

Plaintiff contends that Defendants' proposed construction also improperly limits the claim term to alternating patterns in disclosed embodiments, *i.e.*, T1-T2-T1-T2-T1-T2, while excluding other patterns, *e.g.*, T1-T2-T3-T1-T2-T3 or T1-T2-T2-T1-T2-T2. *Id.*

Plaintiff contends that nothing in the claims "compels" Defendants' proposed construction. *Id.* Plaintiff further contends that Defendants do not identify any "statement in the specification that would disclaim alternating patterns other than a repeating T1-T2 sequence." *Id.* Plaintiff contends that, by contrast, the "purpose of the different shapes is to enable a patterned formation of air gaps to reduce coupling between conductive lines formed in the trenches[,]" which could be achieved through alternating patterns other than the simplest T1-T2 sequence. *Id.* at 25–26 (citing'974 Patent at 10:8–10; Dkt. 81-1 (Dorney Decl.) at ¶ 88).

Plaintiff contends that the prosecution history also does not support Defendants' proposed construction. More specifically, Plaintiff contends that Applicant argued that "Fig. lG does not show a pattern that alternates between trenches 25 and 26 ***along the cross section shown***." *Id.* at 26 (citing Opening, Ex. 14 ('974 File History, 8/22/16 Claim Amendments) at 7) (emphasis in Plaintiff's brief). Plaintiff contends that this cross-section only depicts one instance of trench 26, there is no alternating pattern of any time along the cross-section shown. *Id.*at 26–27.

Plaintiff further contends that Applicant also "noted that '[t]renches 25 are located in area A (to the left) while trench 26 is located in area B (to the right).'" *Id.* at 26. Plaintiff contends that the Min prior art reference discloses that "area A … may include a cell array area in which a plurality of unit memory devices is arranged, and the second area B may include a peripheral or a core area[.]" *Id.* at 27 (quoting '291 Patent (Min) at 7:36–41). Plaintiff contends that not only does this figure not depict an alternating pattern as described above, "there is no reason to assume that, if there were any alternating pattern, it should extend out between the different areas." *Id.* (citing Dkt. No. 81-1 (Dorney Decl.) at ¶ 91).

Plaintiff contends that Defendants' general purpose dictionaries "do not undermine the full scope of 'alternating pattern' in that there is nothing in the ordinary meaning of those words that limits a repeating sequence to two members that 'repeat every other.'" *Id.*

In its reply, Defendants contend that the dispute is whether "alternating" means T1-T2-T1-T2 patterns or "whether it can be stretched to mean any repeating pattern." Reply at 14.

With respect to Plaintiff's argument that Claims 1 and 12 have different claim language, specifically that Claim 12 recites "odd-even alternating patterns," Defendants first contend that claim differentiation does not apply to two independent claims. *Id.* (citing cases). Defendants next that Claim 1 recites the "odd-even alternative pattern requirements" as depicted below in the underlined words. *Id.* at 15.

Claim 1	Claim 12
the first and second trenches arranged in **an alternating pattern** <u>that alternates from first trench to second trench</u> along a second direction that is perpendicular to the first direction	the first and second trenches arranged in **an** <u>odd-even</u> **alternating pattern** along a direction that is perpendicular to the first direction such that two first trenches are separated by a second trench

Defendants contend that the language in these two claims supports the requirement in their construction that the two trenches "repeat every other." *Id.*

Defendants finally contend that "[e]very relevant figure shows trenches alternating between a first type and a second type." *Id.* Defendants contend that "[s]tretching 'alternating' to cover all repeating patterns would effectively read 'alternating' out of the claim and improperly expand claims 'broader than the disclosure in the specification,' which describes only alternating patterns with a sequence wherein the first and second trenches repeat every other." *Id.* (citing *Indacon, Inc. v. Facebook, Inc.*, 824 F.3d 1352, 1357 (Fed. Cir. 2016)).

In its sur-reply, Plaintiff contends that Defendants continue to ignore the difference in language between Claims 1 and 12. Sur-Reply at 11. Plaintiff contends that while Claim 12 an

odd-even alternating pattern, Claim 1 does not and thus it would be improper to limit both claims to any "any alternating pattern must 'repeat every other.'" *Id.* Plaintiff contends that "the principle remains that the term 'odd-even' in the claims should be given effect, and a construction that renders it superfluous should be discounted." *Id.* at 12 (citing *Intell. Ventures I LLC v. T-Mobile USA, Inc.*, 902 F.3d 1372, 1378 (Fed. Cir. 2018)).

With respect to Defendants' argument that the patent figures support their proposed construction, Plaintiff contends that it is improper to "read in limitations from the specification[.]" *Id.*

The Court's Analysis:

After reviewing the parties' arguments and considering the applicable law, the Court agrees with Plaintiff that this term should be construed according to its plain-and-ordinary meaning for the reasons that follow. ***First***, the "heavy presumption" is that terms should be construed according to their plain-and-ordinary meaning. *Azure Networks*, 771 F.3d at 1347.

Second, the only two exceptions to the general rule that a term should be construed as having its plain-and-ordinary meaning are lexicography and disclaimer. *Thorner*, 669 F.3d at 1365. Defendants do not allege lexicography but do allege that the patentee disclaimed claim scope by arguing that Applicant distinguished the Min prior art reference by arguing that trenches 25 and 26 in the Min prior art reference does not disclose alternating trenches.

The Court concludes that Applicant's prosecution statement do not meet the clear and unmistakable standard necessary for disclaimer. More specifically, Figure 1G of Min does not depict repeating odd-even alternating patterns (T1-T2-T1-T2-T1-T2).

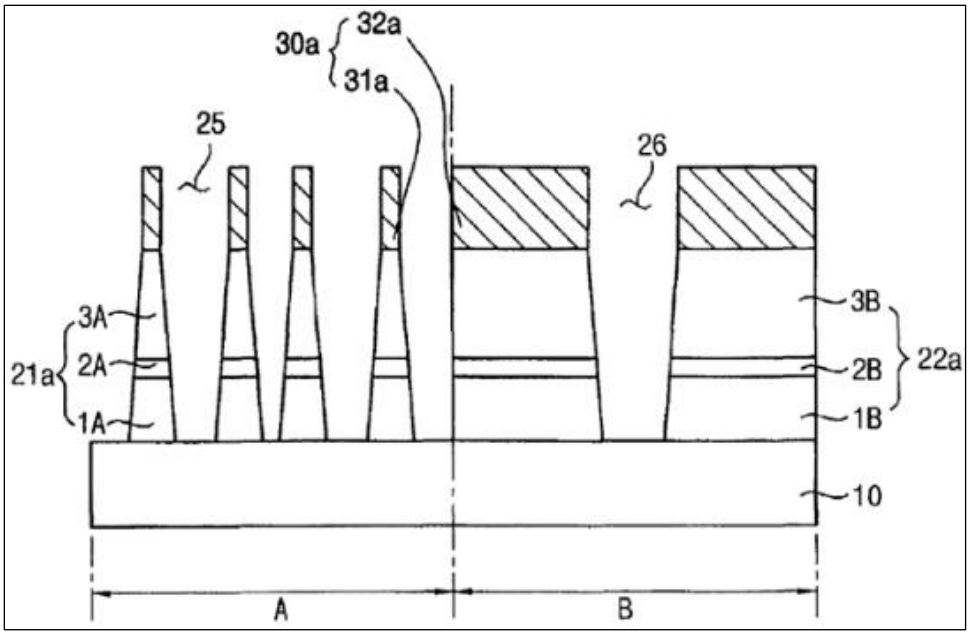

’291 Patent (Min) at Figure 1G. Rather, Figure 1G of Min appears to depict the following pattern: T1-T3-T4-T5-T2, which obviously is not alternating, nor a pattern, let alone an odd-even alternating pattern. In addition, trenches 25 are in area A, where the memory cells are, while trench 26 is in area B, where the peripheral or core circuitry are, which further indicates that Min does not disclose an odd-even alternating patterns, as that would require alternating memory cells and peripheral / core areas, which a POSITA would understand that is not how semiconductors are designed.

Third, Defendants’ proposed construction improperly attempts to limit the claim term to the disclosed embodiments. *Liebel-Flarsheim*, 358 F.3d at 913 (“[I]t is improper to read limitations from a preferred embodiment described in the specification—even if it is the only embodiment—into the claims absent a clear indication in the intrinsic record that the patentee intended the claims to be so limited.”).

Fourth, the Court agrees with Plaintiff that Claim 1 does not expressly disclose odd-even alternating patterns. While Claim 12 expressly requires an “odd-even alternating pattern,” Claim

1 only requires that an "alternating pattern that alternates from first trench to second trench." While the scope of these two portions of Claims 1 and 12 may overlap, the Court concludes that Claim 1 allows for T1-T2-T3-T1-T2-T3, while Claim 12 does not.

Fifth, none of the dictionary definitions for "alternat[ing]" that Defendants cite requires an odd-even alternating pattern.

Therefore, for the reasons described above, the Court finds that the term should be construed according to its plain-and-ordinary meaning.

IV. CONCLUSION

In conclusion, for the reasons described herein, the Court adopts the below constructions as its final constructions.

Term	Plaintiff's Proposed Construction	Defendants' Proposed Construction	Court's Final Construction
#1: "feedback circuit … including a feedback transistor" U.S. Patent No. 8,148,962, Claim 1 Proposed by Defendants	Plain and ordinary meaning	"a circuit that generates a voltage at the gate of a transistor by comparing a voltage proportional to the voltage across the drain and source of the transistor and a reference voltage with a differential amplifier"	Plain-and-ordinary meaning
#2: "substantially constant" U.S. Patent No. 8,148,962, Claims 1, 14 Proposed by Defendants	Plain and ordinary meaning	Indefinite	Not indefinite. Plain-and-ordinary meaning.

Petitioner Micron Ex-1016, 0063

Term	Plaintiff's Proposed Construction	Defendants' Proposed Construction	Court's Final Construction
#3: "feedback means for maintaining a voltage at a gate of a feedback transistor substantially constant" U.S. Patent No. 8,148,962, Claim 14 Proposed by Defendants	35 U.S.C. § 112, ¶6 **Function:** maintaining a voltage at a gate of a feedback transistor substantially constant **Structure:** feedback circuit 331 of Fig. 3 (including differential amplifier 333 and transistor 332), feedback circuit of Fig. 4 (including differential amplifier 433 and transistor 432), feedback circuit 531 of Fig. 5 (including differential amplifier 533 and transistor 532), feedback circuit 631 of Fig. 6 (including differential amplifier 633 and transistor 632) and equivalents, as described and shown at 5:52-57, 7:19-21, 8:46-60; 10:13-16, Figs. 3, 4, 5, and 6.	35 U.S.C. §112, ¶6 applies. **Function:** maintaining a voltage at a gate of a feedback transistor substantially constant **Structure:** Feedback circuit arranged as shown in Figure 3, element 331 including differential amplifier 333, voltage divider 336, and feedback transistor 332. Feedback circuit arranged as shown in Figure 4, including differential amplifier 433, voltage divider 436, and feedback transistor 432. Feedback circuit arranged as shown in Figure 5, element 531 including differential amplifier 533, voltage divider 536, and feedback transistor 532. Feedback circuit arranged as shown in Figure 6, element 631 including differential amplifier 633, voltage divider 636, and feedback transistor 632.	35 U.S.C. §112, ¶ 6 applies. **Function:** maintaining a voltage at a gate of a feedback transistor substantially constant **Structure:** Feedback circuit arranged as shown in Figure 3, element 331 including differential amplifier 333, voltage divider 336, and feedback transistor 332. Feedback circuit arranged as shown in Figure 4, including differential amplifier 433, voltage divider 436, and feedback transistor 432. Feedback circuit arranged as shown in Figure 5, element 531 including differential amplifier 533, voltage divider 536, and feedback transistor 532. Feedback circuit arranged as shown in Figure 6, element 631 including differential amplifier 633, voltage divider 636, and feedback transistor 632, and equivalents.

Term	Plaintiff's Proposed Construction	Defendants' Proposed Construction	Court's Final Construction
#4: "first current supply means for supplying to a second current path referenced to said input a first current that is substantially constant" U.S. Patent No. 8,148,962, Claim 14 Proposed by Defendants	35 U.S.C. § 112 ¶6 **Function:** supplying to a second current path referenced to said input a first current that is substantially constant **Structure:** first current source 322 of Fig. 3, first current source 422 of Fig. 4, first current source 522 of Fig. 5, first current source 622 of Fig. 6, and equivalents, as described and shown at 6:25-41; 7:52-61; 8:61-9:8; 10:63-11:3, Figs. 3, 4, 5, 6.	35 U.S.C. §112, ¶6 applies. **Function:** supplying to a second current path referenced to said input a first current that is substantially constant **Structure:** Current source shown in Figure 5 element 522, including master transistor 521 and slave transistor 523. Current source shown in Figure 6 element 622, including transistor 672 whose gate is connected to a bias voltage and whose drain is connected to a second current path.	35 U.S.C. §112, ¶ 6 applies. **Function:** supplying to a second current path referenced to said input a first current that is substantially constant **Structure:** first current source 322 of Fig. 3, first current source 422 of Fig. 4, first current source 522 of Fig. 5, first current source 622 of Fig. 6, and equivalents, as described and shown at 6:25-41; 7:52-61; 8:61-9:8; 10:63-11:3, Figs. 3, 4, 5, 6.

Petitioner Micron Ex-1016, 0065

Term	Plaintiff's Proposed Construction	Defendants' Proposed Construction	Court's Final Construction
#5: "second current supply means . . . for receiving a first voltage reference and a second voltage reference and for supplying a second current to said second current path with a magnitude based on said first voltage reference and said second voltage reference" U.S. Patent No. 8,148,962, Claim 14 Proposed by Defendants	35 U.S.C. § 112 ¶6 **Function:** receiving a first voltage reference and a second voltage reference and for supplying a second current to said second current path with a magnitude based on said first voltage reference and said second voltage reference **Structure:** second current source 340 of Fig. 3, second current source 440 of Fig. 4, second current source 540 of Fig. 5, second current source 640 of Fig. 6, and equivalents, as described and shown at 6:42-62; 7:62-8:17; 9:40-54; 10:40-53, Figs. 3, 4, 5, 6.	35 U.S.C. §112, ¶6 applies. **Function:** receiving a first voltage reference and a second voltage reference and for supplying a second current to said second current path with a magnitude based on said first voltage reference and said second voltage reference **Structure:** Variable current source as shown in Figure 5, element 540 including replica transistor 542 whose gate is coupled to the gate of feedback transistor 532 and whose drain is coupled to output node 560. Variable current source as shown in Figure 6 element 640, including replica transistor 642 whose gate is coupled to the gate of feedback transistor 632 and whose drain is coupled to output node 660.	35 U.S.C. §112, ¶ 6 applies. **Function:** receiving a first voltage reference and a second voltage reference and for supplying a second current to said second current path with a magnitude based on said first voltage reference and said second voltage reference **Structure:** second current source 340 of Fig. 3, second current source 440 of Fig. 4, second current source 540 of Fig. 5, second current source 640 of Fig. 6, and equivalents, as described and shown at 6:42-62; 7:62-8:17; 9:40-54; 10:40-53, Figs. 3, 4, 5, 6.

Petitioner Micron Ex-1016, 0066

Term	Plaintiff's Proposed Construction	Defendants' Proposed Construction	Court's Final Construction
#6: "layout for the USB port is different from layout of the I/O port" U.S. Patent No. 8,327,051, Claim 24 Proposed by Defendants	Plain and ordinary meaning	"USB port and I/O port having different physical and electrical arrangements"	Plain-and-ordinary meaning
#7: "information identifying a location associated with a variation of the structure" U.S. Patent No. 8,996,838, Claims 1, 12 Proposed by Defendants	Plain and ordinary meaning	"information identifying where a structural variation through tapering begins"	Plain-and-ordinary meaning
#8: "the second shape being different from the first shape" / "the second shape being different to the first shape" U.S. Patent No. 9,524,974, Claims 1, 12 Proposed by Defendants	Plain and ordinary meaning	"the second shape having a different geometric profile than the first shape"	Plain-and-ordinary meaning

Petitioner Micron Ex-1016, 0067

Term	Plaintiff's Proposed Construction	Defendants' Proposed Construction	Court's Final Construction
#9: "alternating pattern" U.S. Patent No. 9,524,974, Claims 1, 12 Proposed by Defendants	Plain and ordinary meaning	"[a] sequence wherein the first and the second trenches repeat every other"	Plain-and-ordinary meaning

SIGNED this 3rd day of October, 2025.

DEREK T. GILLILAND
UNITED STATES MAGISTRATE JUDGE

Petitioner Micron Ex-1016, 0068