US009980813B2

(12) United States Patent
Eller

(10) Patent No.: US 9,980,813 B2
(45) Date of Patent: May 29, 2018

(54) **SELECTIVE FLUID BARRIER VALVE DEVICE AND METHOD OF TREATMENT**

(71) Applicant: **Cook Medical Technologies LLC**, Bloomington, IN (US)

(72) Inventor: **Derek Eller**, Orient, OH (US)

(73) Assignee: **COOK MEDICAL TECHNOLOGIES LLC**, Bloomington, IN (US)

(*) Notice: Subject to any disclaimer, the term of this patent is extended or adjusted under 35 U.S.C. 154(b) by 402 days.

(21) Appl. No.: **14/689,734**

(22) Filed: **Apr. 17, 2015**

(65) **Prior Publication Data**

US 2015/0305859 A1 Oct. 29, 2015

Related U.S. Application Data

(60) Provisional application No. 61/985,134, filed on Apr. 28, 2014.

(51) **Int. Cl.**
A61M 39/00 (2006.01)
A61F 2/24 (2006.01)
(Continued)

(52) **U.S. Cl.**
CPC ***A61F 2/24*** (2013.01); ***A61F 2/2469*** (2013.01); ***A61M 39/0613*** (2013.01);
(Continued)

(58) **Field of Classification Search**
CPC A61M 39/288; F16K 7/06; F16K 7/061; F16K 7/063; F16K 7/08
(Continued)

(56) **References Cited**

U.S. PATENT DOCUMENTS

2,434,835 A * 1/1948 Colley F16K 7/06 138/45
3,383,131 A * 5/1968 Rosfelder E21B 25/06 175/240
(Continued)

FOREIGN PATENT DOCUMENTS

WO	WO03048616	6/2003
WO	WO2007016122	2/2007
WO	WO2007035471	3/2007

OTHER PUBLICATIONS

European Patent Office, "Extended European Search Report," for Int. App. No. 15165062.9, dated Sep. 24, 2015, pp. 1-7.
(Continued)

Primary Examiner — Kami A Bosworth
Assistant Examiner — William Carpenter
(74) *Attorney, Agent, or Firm* — Buchanan Van Tuinen LLC

(57) **ABSTRACT**

Selective fluid barrier valve devices and methods of treatment are described herein. An embodiment of a selective fluid barrier valve device comprises a housing, an actuator, a sleeve, a wire member, and a connector. The sleeve defines a passageway that extends through the sleeve. The actuator is moveable between a first position and a second position. When the actuator is in the first position, the sleeve is in a first configuration such that fluid can pass through the passageway defined by the sleeve. When the actuator is in a second position, the sleeve is in a second configuration such that fluid is prevented from passing through the passageway defined by the sleeve.

4 Claims, 11 Drawing Sheets

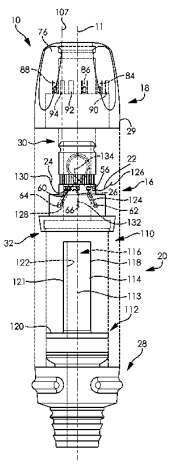

Imperative Care v. Inari Medical
US Patent 12,109,384
Imperative Care Ex. 1007

(51) **Int. Cl.**

A61M 39/06	(2006.01)
A61M 39/22	(2006.01)
A61M 39/28	(2006.01)
F16K 7/06	(2006.01)

(52) **U.S. Cl.**
CPC ***A61M 39/22*** (2013.01); ***A61M 39/288*** (2013.01); ***F16K 7/06*** (2013.01)

(58) **Field of Classification Search**
USPC 251/4, 9, 10, 294
See application file for complete search history.

(56) **References Cited**

U.S. PATENT DOCUMENTS

3,383,161	A *	5/1968	Fukunaga	C08K 5/20 8/601
3,419,008	A	12/1968	Plishner	
3,675,656	A	7/1972	Hakim	
3,699,957	A	10/1972	Robinson	
3,730,186	A	5/1973	Edmunds, Jr. et al.	
3,744,063	A	7/1973	McWhorter et al.	
3,750,194	A	8/1973	Summers	
3,817,237	A	6/1974	Bolduc	
3,926,175	A	12/1975	Allen et al.	
3,939,821	A	2/1976	Roth	
4,080,958	A	3/1978	Bregman et al.	
4,092,010	A	5/1978	Carlson	
4,195,810	A *	4/1980	Lavin	F16K 7/07 251/5
4,245,358	A	1/1981	Moasser	
4,256,093	A	3/1981	Helms et al.	
4,408,597	A	10/1983	Tenney, Jr.	
4,412,669	A *	11/1983	Hanyu	F16K 7/06 251/212
4,417,360	A	11/1983	Moasser	
4,523,737	A *	6/1985	Wentworth	F16K 7/08 251/213
4,551,862	A	11/1985	Haber	
4,552,128	A	11/1985	Haber	
4,828,544	A	5/1989	Lane et al.	
4,875,897	A	10/1989	Lee	
4,958,630	A	9/1990	Rosenbluth et al.	
4,982,731	A	1/1991	Lue et al.	
5,167,637	A	12/1992	Okada et al.	
5,207,409	A	5/1993	Riikonen	
5,257,973	A	11/1993	Villasuso	
5,269,772	A	12/1993	Wilk	
5,354,271	A	10/1994	Voda	
5,366,506	A	11/1994	Davis	
5,383,896	A	1/1995	Gershony et al.	
5,453,079	A	9/1995	Schwaninger	
5,762,599	A	6/1998	Sohn	
5,797,879	A	8/1998	DeCampli	
5,814,026	A	9/1998	Yoon	
5,891,113	A	4/1999	Quinn	
5,919,183	A	7/1999	Field	
6,099,506	A	8/2000	Macoviak et al.	
6,102,361	A	8/2000	Riikonen	
6,162,238	A	12/2000	Kaplan et al.	
6,217,555	B1	4/2001	Hart et al.	
6,352,520	B1	3/2002	Miyazaki	
6,352,521	B1	3/2002	Prosl	
6,409,656	B1	6/2002	Sangouard	
6,547,801	B1	4/2003	Dargent et al.	
6,616,624	B1	9/2003	Kieval	
6,623,426	B2	9/2003	Bonadio et al.	
7,025,741	B2	4/2006	Cull	
7,367,938	B2	5/2008	Forsell	
7,479,105	B2	1/2009	Matsumura	
7,648,120	B1	1/2010	Kota et al.	
7,736,328	B2	6/2010	Childers et al.	
7,762,980	B2	7/2010	Gertner	
7,762,999	B2	7/2010	Byrum	
8,096,989	B2	1/2012	Buffard et al.	
8,114,044	B2	2/2012	Cull	
8,152,711	B2	4/2012	Gross	
8,206,294	B2	6/2012	Widenhouse et al.	
8,226,592	B2	7/2012	Brenneman et al.	
8,506,517	B2	8/2013	Stergiopulos	
8,690,834	B2	4/2014	Koehler	
8,728,105	B2	5/2014	Aguirre	
9,440,059	B2 *	9/2016	Moore	A61M 39/0613
2003/0116731	A1 *	6/2003	Hartley	A61M 39/0613 251/7
2004/0000122	A1	1/2004	Sterner et al.	
2004/0015159	A1	1/2004	Slater et al.	
2004/0064100	A1	4/2004	Smith	
2004/0167559	A1	8/2004	Taylor et al.	
2007/0027460	A1	2/2007	Case et al.	
2007/0078395	A1	4/2007	Valaie	
2007/0106262	A1	5/2007	Becker et al.	
2009/0326468	A1	12/2009	Blier	
2010/0127194	A1	5/2010	Landry	
2012/0271116	A1	10/2012	Koehler	
2012/0310166	A1	12/2012	Huff	

OTHER PUBLICATIONS

Gore & Associates, Inc, Product Information Sheet, Gore DrySeal Valve, 2010.

Medtronic Neurosurgery, Pediatric Shunt Case using a Strata II Valve with William Louden MD, YouTube.com, published Jul. 5, 2013.

Medtronic, Strata Valves, http://www.medtronic.com/patients/hydocephalus/device/our-shunts/strata-valves/index.htm, last updated Oct. 8, 2012, accessed Sep. 11, 2014.

United States Patent and Trademark Office, Final Office Action for U.S. Appl. No. 13/092,410, first named inventor: Cleve Koehler, dated Nov. 6, 2013, pp. 1-41.

United States Patent and Trademark Office, Non-final Office Action for U.S. Appl. No. 13/092,410, first named inventor: Cleve Koehler, dated Jun. 21, 2013, pp. 1-31.

* cited by examiner

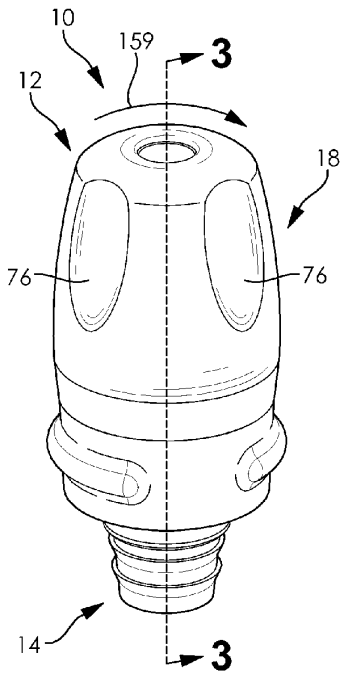
10
159
3
12
18
76
76
14
3

FIG. 1

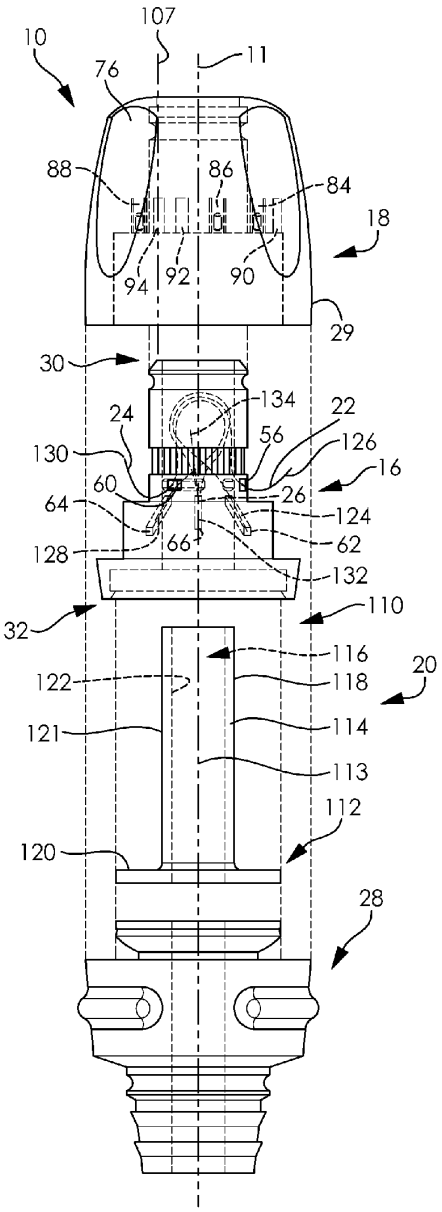
107
10
11
76
88
86
84
18
94
92
90
29
30
134
24
22
56
126
130
16
60
26
64
124
66
62
128
132
110
32
116
122
118
20
121
114
113
112
120
28

FIG. 2

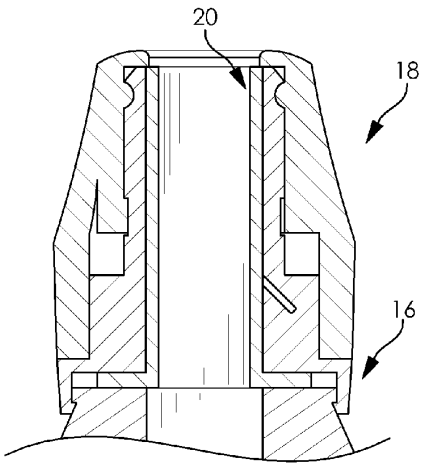

FIG. 3

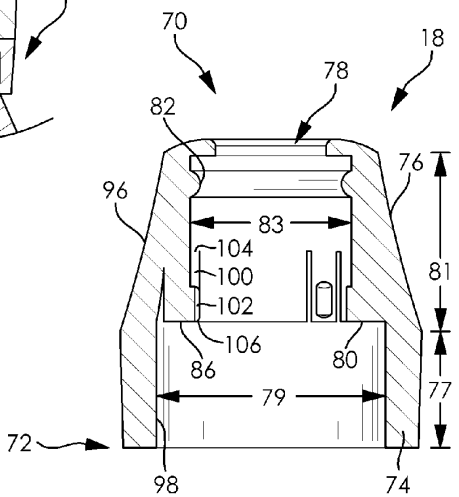

FIG. 4

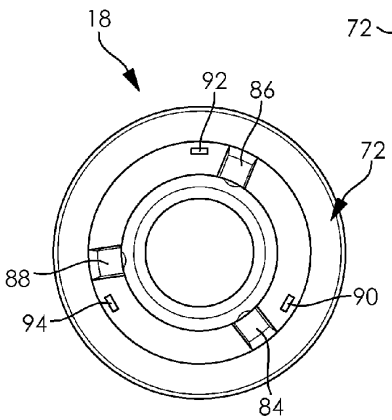

FIG. 5

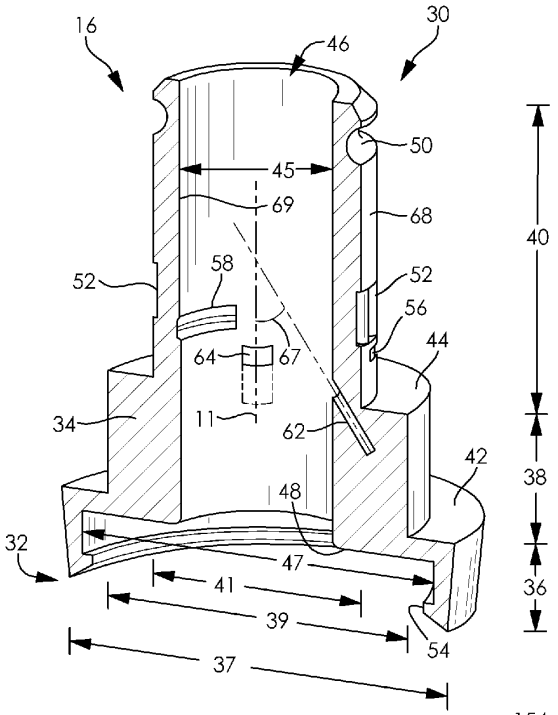
16
46
30
50
45
69
68
40
52
58
52
56
64
67
44
34
11
62
42
38
48
32
47
41
36
39
54
37

FIG. 6

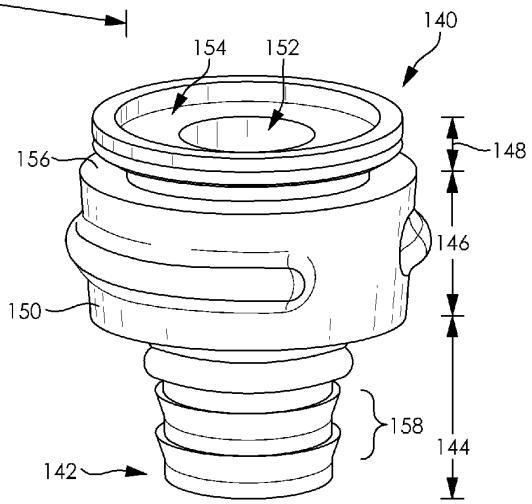
140
154
152
148
156
146
150
158
144
142

FIG. 7

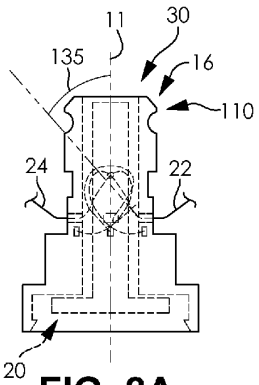

FIG. 8A

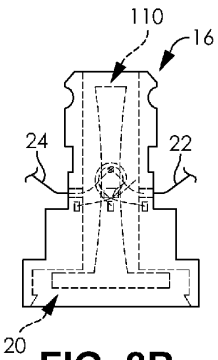

FIG. 8B

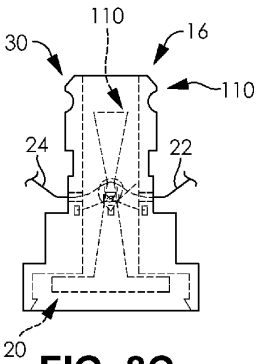

FIG. 8C

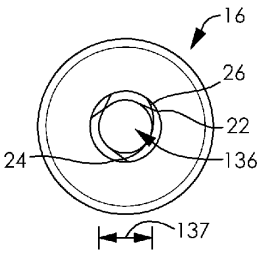

FIG. 9A

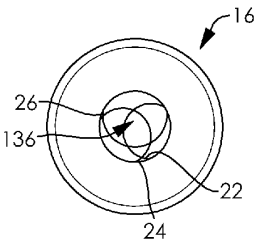

FIG. 9B

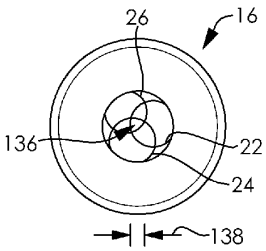

FIG. 9C

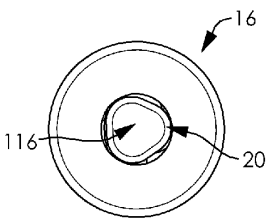

FIG. 10A

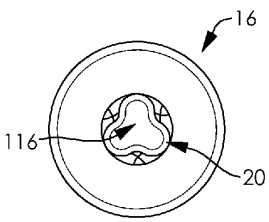

FIG. 10B

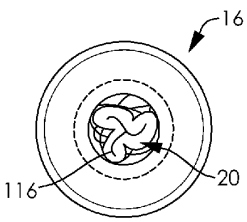

FIG. 10C

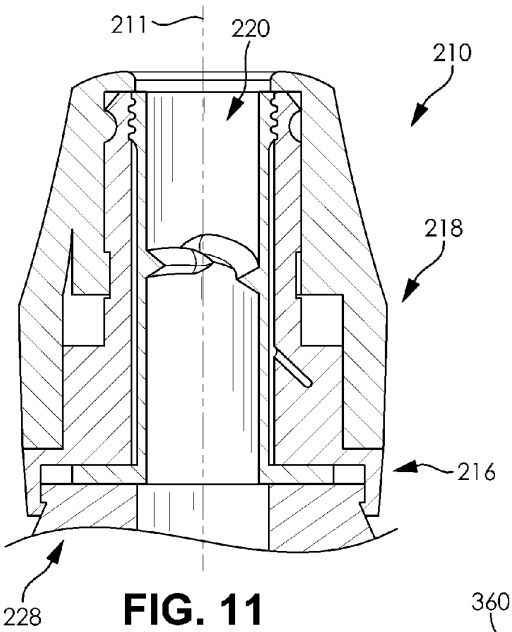

FIG. 11

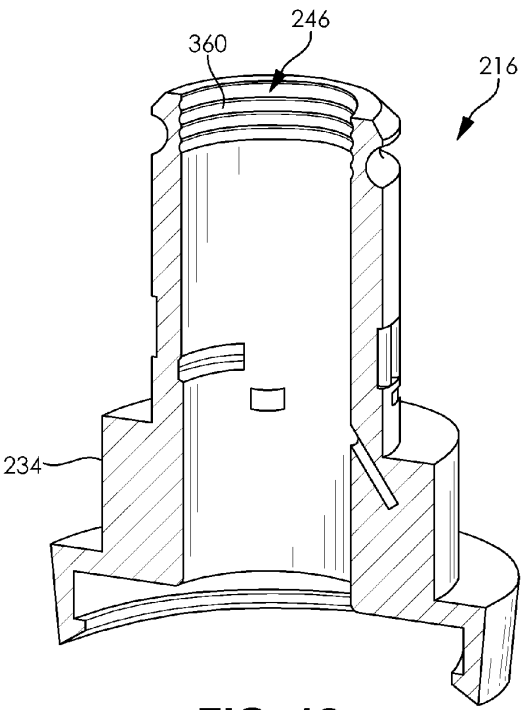

FIG. 12

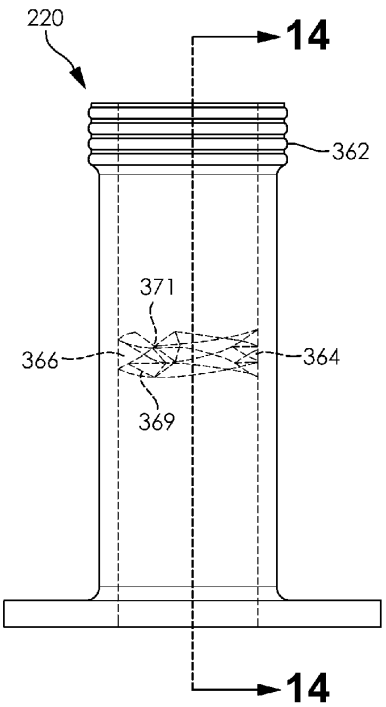
220
14
362
371
366
364
369
14

FIG. 13

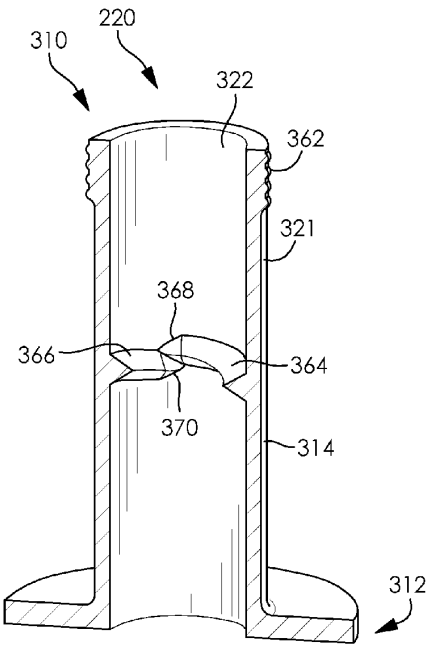
310
220
322
362
321
368
366
364
370
314
312

FIG. 14

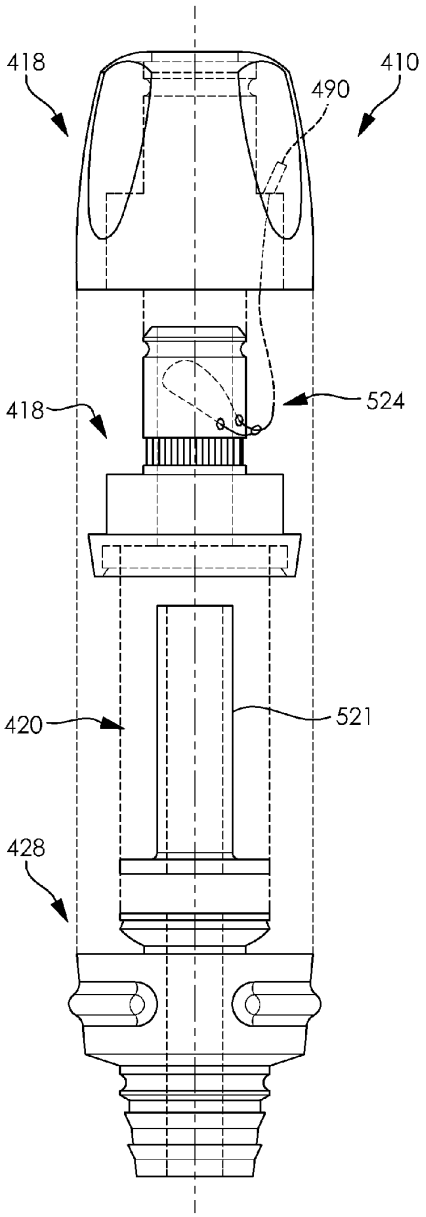

FIG. 15

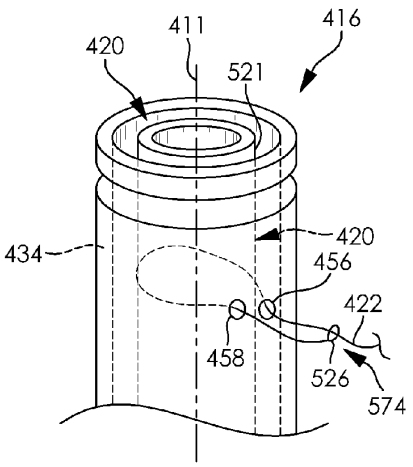

FIG. 16

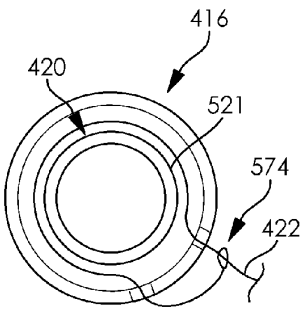

FIG. 17

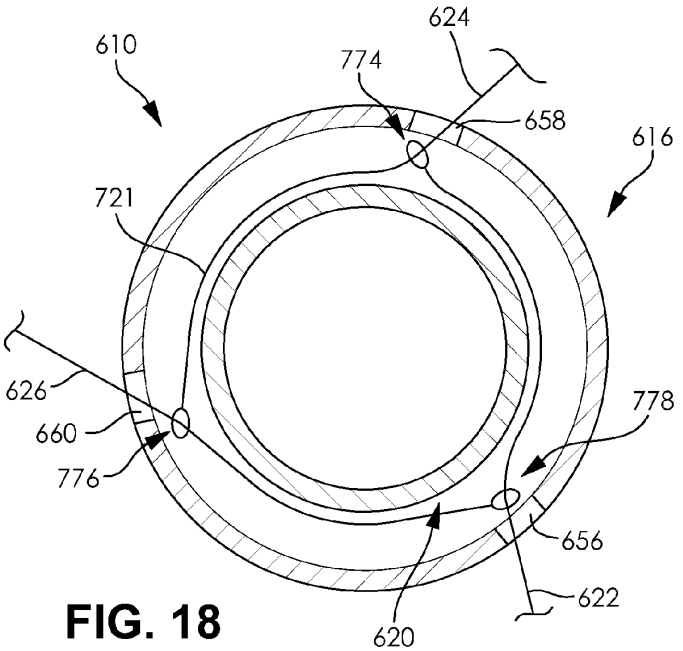
610
624
774
658
616
721
626
660
776
778
656
622
620

FIG. 18

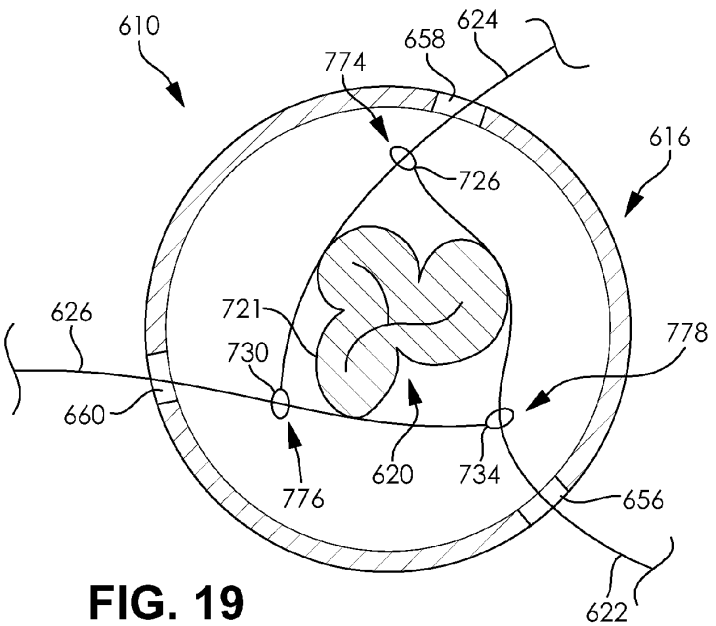
610
624
658
774
616
726
626
721
730
778
660
776
620
734
656
622

FIG. 19

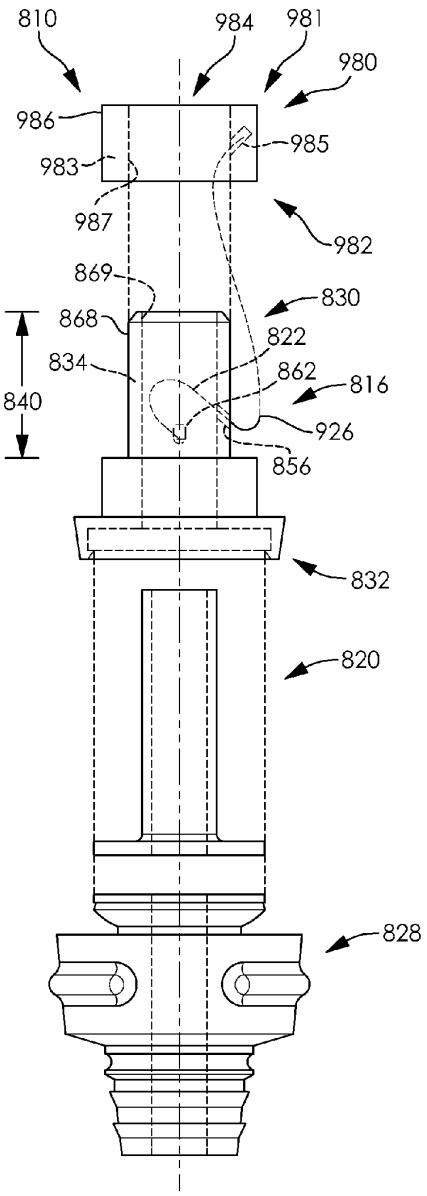

FIG. 20

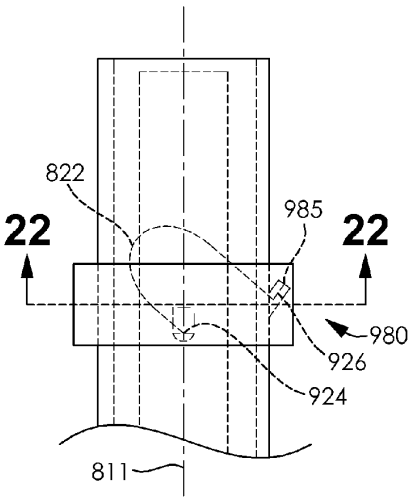

FIG. 21

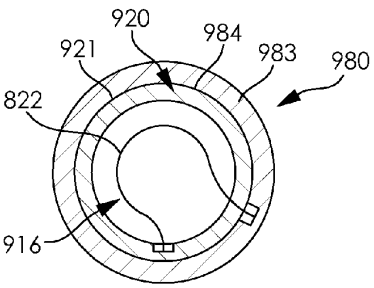

FIG. 22

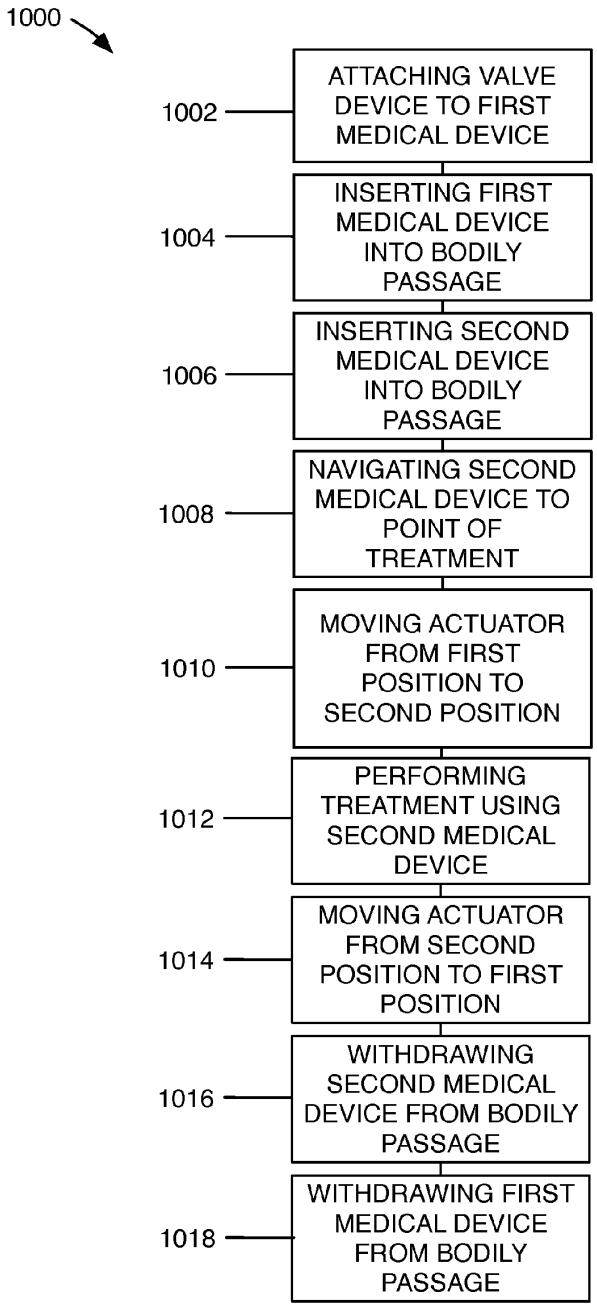
1000
1002
ATTACHING VALVE DEVICE TO FIRST MEDICAL DEVICE
1004
INSERTING FIRST MEDICAL DEVICE INTO BODILY PASSAGE
1006
INSERTING SECOND MEDICAL DEVICE INTO BODILY PASSAGE
1008
NAVIGATING SECOND MEDICAL DEVICE TO POINT OF TREATMENT
1010
MOVING ACTUATOR FROM FIRST POSITION TO SECOND POSITION
1012
PERFORMING TREATMENT USING SECOND MEDICAL DEVICE
1014
MOVING ACTUATOR FROM SECOND POSITION TO FIRST POSITION
1016
WITHDRAWING SECOND MEDICAL DEVICE FROM BODILY PASSAGE
1018
WITHDRAWING FIRST MEDICAL DEVICE FROM BODILY PASSAGE

FIG. 23

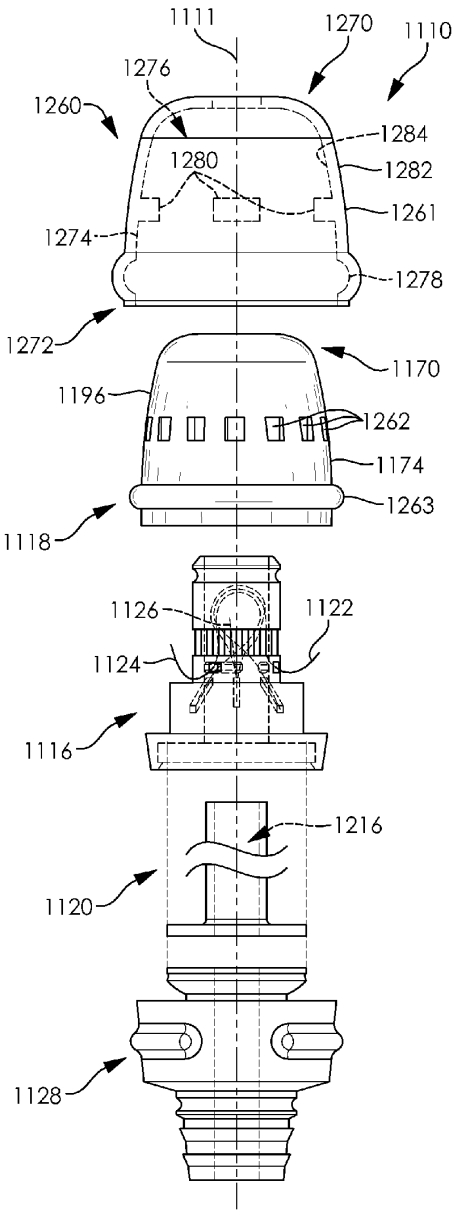

FIG. 24

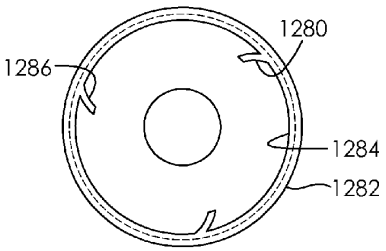

FIG. 25

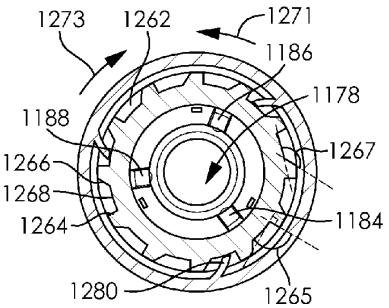

FIG. 26

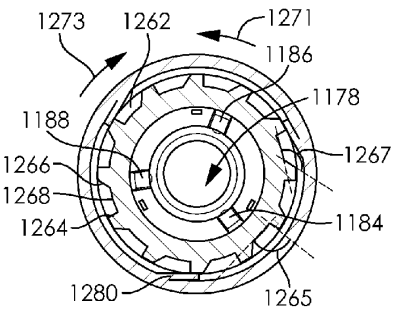

FIG. 27

SELECTIVE FLUID BARRIER VALVE DEVICE AND METHOD OF TREATMENT

RELATED APPLICATION

This application claims the benefit of U.S. Provisional Application No. 61/985,134, filed Apr. 28, 2014. The disclosure of this related application is hereby incorporated into this disclosure in its entirety.

FIELD

The disclosure relates generally to the field of medical devices. Particular embodiments are related to selective fluid barrier valve devices and methods of treatment using a selective fluid barrier valve device.

BACKGROUND

A variety of procedures have been developed that require the percutaneous insertion of one or more interventional devices into a bodily passage, such as a portion of the vascular system. Such procedures include, for example, percutaneous transluminal coronary angioplasty (PTCA), X-ray angiographic procedures, and the like. The interventional devices intended for use in such procedures may be introduced into the bodily passage using a variety of known techniques. For example, an introducer can be advanced into a bodily passageway over a previously placed guide wire and used as a conduit for the insertion of an interventional device into the bodily passage.

In many cases, an introducer will include one or more valves for inhibiting leakage of bodily fluids, such as blood, through the introducer as an interventional device is inserted through or withdrawn from the introducer. In some cases, valves that include an elastomeric component and define a small slit are used to minimize fluid leakage during these exchanges. These valves are dependent upon the ability of the elastomeric component to seal around an interventional device to close any gaps created upon insertion or withdrawal of the device through the valve. Generally, these valves can only accommodate interventional devices that have outside diameters that fall within a small range. In addition, during the performance of a procedure, a user may be required to hold an interventional device disposed through a valve stationary to avoid slippage and to increase the performance of the valve.

Therefore, there is a need for improved fluid barrier valve devices and methods of treatment using a fluid barrier valve device.

BRIEF SUMMARY OF SELECTED EXAMPLE EMBODIMENTS

An example embodiment of a selective fluid barrier valve device that has a lengthwise axis and comprises a housing, an actuator, a sleeve, and a first wire member. The housing has a housing proximal end, a housing distal end, and a housing body that defines a housing passageway and a first opening. The housing passageway extends through the housing. The first opening extends through the housing body and provides access to the housing passageway. The actuator is moveably attached to the housing and is moveable between a first position and a second position. The sleeve is disposed within the housing passageway and has a sleeve proximal end, a sleeve distal end, and a sleeve body that defines a sleeve passageway that extends through the sleeve. The sleeve is moveable between a first configuration in which the sleeve passageway is open such that fluid can pass through the sleeve passageway and a second configuration in which the sleeve passageway is closed and prevents fluid from passing through the sleeve passageway. The first wire member has a first wire member first end attached to the housing and a first wire member second end attached to the actuator. The first wire member extends between the housing and the sleeve and through the first opening defined by the housing. The sleeve is in the first configuration and the sleeve proximal end is disposed a first distance from the housing proximal end when the actuator is in the first position. The sleeve is in the second configuration and the sleeve proximal end is disposed a second distance from the housing proximal end when the actuator is in the second position. The second distance is different than the first distance.

An example method of treatment using a selective fluid barrier valve device comprises the steps of: attaching a selective fluid barrier valve device to a first medical device that has a proximal end, a distal end, and a body that defines a lumen that extends from the proximal end to the distal end, the selective fluid barrier valve device has a lengthwise axis and comprises a housing, an actuator, a sleeve, and a first wire member; inserting the first medical device into a bodily passage such that the distal end of the first medical device is disposed within the bodily passage; inserting a second medical device that has a proximal end and a distal end through the selective fluid barrier valve device and the first medical device such that the distal end of the second medical device is disposed within the bodily passage; navigating the distal end of the second medical device to a point of treatment within the bodily passage; moving the actuator of the selective fluid barrier valve device from the first position to the second position; performing treatment using the second medical device; moving the actuator of the selective fluid barrier valve device from the second position to the first position; withdrawing the second medical device from the bodily passage, the first medical device, and the selective fluid barrier valve device; and withdrawing the first medical device from the bodily passage.

DESCRIPTION OF FIGURES

FIG. **1** is a perspective view of an example selective fluid barrier valve device.

FIG. **2** is an exploded view of the selective fluid barrier valve device illustrated in FIG. **1**.

FIG. **3** is a partial cross-sectional view of the selective fluid barrier valve device illustrated in FIG. **1**, taken along line **3-3**. The selective fluid barrier valve device is illustrated in a first configuration. Each of the first wire member, the second wire member, and the third wire member has been omitted for clarity.

FIG. **4** is a sectional view of the actuator of the selective fluid barrier valve device illustrated in FIG. **1** taken along the lengthwise axis of the actuator.

FIG. **5** is an end view of the distal end of the actuator of the selective fluid barrier valve device illustrated in FIG. **1**.

FIG. **6** is a perspective sectional view of the housing of the selective fluid barrier valve device illustrated in FIG. **1** taken along the lengthwise axis of the housing.

FIG. **7** is a perspective view of the connector of the selective fluid barrier valve device illustrated in FIG. **1**.

FIG. **8**A is a side view of the selective fluid barrier valve device illustrated in FIG. **1**. The selective fluid barrier valve device is illustrated in a first configuration. Each of the actuator and connector has been omitted for clarity.

FIG. **8**B is another side view of the selective fluid barrier valve device illustrated in FIG. **1**. The selective fluid barrier valve device is illustrated between a first configuration and a second configuration. Each of the actuator and connector has been omitted for clarity.

FIG. **8**C is another side view of the selective fluid barrier valve device illustrated in FIG. **1**. The selective fluid barrier valve device is illustrated in a second configuration. Each of the actuator and connector has been omitted for clarity.

FIG. **9**A is an end view of the distal end of the selective fluid barrier valve device illustrated in FIG. **1**. The selective fluid barrier valve device is illustrated in a first configuration. Each of the actuator, the connector, and the sleeve has been omitted for clarity.

FIG. **9**B is another end view of the distal end of the selective fluid barrier valve device illustrated in FIG. **1**. The selective fluid barrier valve device is illustrated between a first configuration and a second configuration. Each of the actuator, the connector, and the sleeve has been omitted for clarity.

FIG. **9**C is another end view of the distal end of the selective fluid barrier valve device illustrated in FIG. **1**. The selective fluid barrier valve device is illustrated in a second configuration. Each of the actuator, the connector, and the sleeve has been omitted for clarity.

FIG. **10**A is another end view of the distal end of the selective fluid barrier valve device illustrated in FIG. **1**. The selective fluid barrier valve device is illustrated in a first configuration. Each of the actuator and the connector has been omitted for clarity.

FIG. **10**B is another end view of the distal end of the selective fluid barrier valve device illustrated in FIG. **1**. The selective fluid barrier valve device is illustrated between a first configuration and a second configuration. Each of the actuator and the connector has been omitted for clarity.

FIG. **10**C is another end view of the distal end of the selective fluid barrier valve device illustrated in FIG. **1**. The selective fluid barrier valve device is illustrated in a second configuration. Each of the actuator and the connector has been omitted for clarity.

FIG. **11** is a partial sectional view of another example selective fluid barrier valve device taken along the lengthwise axis of the selective fluid barrier valve device. The selective fluid barrier valve device is illustrated in a first configuration.

FIG. **12** is a perspective sectional view of the housing of the selective fluid barrier valve device illustrated in FIG. **11** taken along the lengthwise axis of the housing.

FIG. **13** is a side view of the sleeve of the selective fluid barrier valve device illustrated in FIG. **11**.

FIG. **14** is a perspective cross-sectional view of the sleeve illustrated in FIG. **13**, taken along line **14-14**.

FIG. **15** is an exploded view of another example selective fluid barrier valve device.

FIG. **16** is a partial perspective view of the selective fluid barrier valve device illustrated in FIG. **15**. The selective fluid barrier valve device is illustrated in a first configuration. Each of the actuator and the connector has been omitted for clarity.

FIG. **17** is an end view of the proximal end of the selective fluid barrier valve device illustrated in FIG. **16**.

FIG. **18** is a sectional view of another example selective fluid barrier valve device taken along an axis that is orthogonal to the lengthwise axis of the selective fluid barrier valve device. The selective fluid barrier valve device is illustrated in a first configuration. Each of the actuator and the connector has been omitted for clarity.

FIG. **19** is another sectional view of the selective fluid barrier valve device illustrated in FIG. **18** taken along an axis that is orthogonal to the lengthwise axis of the selective fluid barrier valve device. The selective fluid barrier valve device is illustrated in a second configuration.

FIG. **20** is an exploded view of another example selective fluid barrier valve device.

FIG. **21** is a partial side view of the selective fluid barrier valve device illustrated in FIG. **20**. The selective fluid barrier valve device is illustrated in a first configuration.

FIG. **22** is a cross-sectional view of the selective fluid barrier valve device illustrated in FIG. **21**, taken along line **22-22**. The sleeve has been omitted for clarity.

FIG. **23** is a flowchart representation of an example method of treatment.

FIG. **24** is an exploded view of another example selective fluid barrier valve device.

FIG. **25** is an end view of the distal end of the second actuator of the selective fluid barrier valve device illustrated in FIG. **24**.

FIG. **26** is an end view of the distal end of the first actuator and the second actuator of the selective fluid barrier valve device illustrated in FIG. **24**. Each projection of the plurality of projections of the second actuator is in a first configuration.

FIG. **27** is an end view of the distal end of the first actuator and the second actuator of the selective fluid barrier valve device illustrated in FIG. **24**. Each projection of the plurality of projections of the second actuator is in a second configuration.

DESCRIPTION OF EMBODIMENTS

The following detailed description and the appended drawings describe and illustrate various example embodiments of selective fluid barrier valve devices and methods of treatment. The description and illustration of these examples are provided to enable one skilled in the art to make and use a selective fluid barrier valve device and to practice a method of treatment using a selective fluid barrier valve device. They are not intended to limit the scope of the claims in any manner.

The use of "e.g.," "etc.," "for instance," "in example," and "or" and grammatically related terms indicates non-exclusive alternatives without limitation, unless otherwise noted. The use of "optionally" and grammatically related terms means that the subsequently described element, event, feature, or circumstance may or may not be present or occur, and that the description includes instances where said element, event, feature, or circumstance occurs and instances where it does not. The term "attached" refers to the fixed, releasable, or integrated association of two or more elements and/or devices. Thus, the term "attached" includes releasably attaching and fixedly attaching two or more elements and/or devices. As used herein, the terms "proximal" and "distal" are used to describe opposing axial ends of the particular element or feature being described. The term "diameter" refers to the length of a straight line passing from side to side through the center of a body, element, or feature, and does not impart any structural configuration on the body, element, or feature. The term "circumference" refers to the distance around the exterior surface of a body, element, or feature, and does not impart any structural configuration on the body, elements, or feature. The use of "bodily passage" or "body passage" refers to any passage within the body of an animal, including humans, and includes elongate passages, arteries, and veins.

FIGS. **1**, **2**, **3**, **4**, **5**, **6**, **7**, **8**A, **8**B, **8**C, **9**A, **9**B, **9**C, **10**A, **10**B, and **10**C illustrate an embodiment of a selective fluid barrier valve device **10** that has a lengthwise axis **11**, a proximal end **12**, a distal end **14**, a housing **16**, an actuator **18**, a sleeve **20**, a first wire member **22**, a second wire member **24**, a third wire member **26**, and a connector **28**. The selective fluid barrier valve device **10** is moveable between a first configuration and a second configuration, as described in more detail herein. In the first configuration, fluid can pass through the selective fluid barrier valve device **10**. In the second configuration, fluid is prevented from passing through the selective fluid barrier valve device **10**.

In the embodiment illustrated, and as shown in FIGS. **2** and **6**, the housing **16** has a tapered proximal end **30**, a distal end **32**, and a housing body **34** that defines a first portion **36**, a second portion **38**, a third portion **40**, a first shoulder **42**, a second shoulder **44**, a passageway **46**, a third shoulder **48**, a groove **50**, a plurality of recesses **52**, a protuberance **54**, a first opening **56**, a second opening **58**, a third opening **60**, a first cavity **62**, a second cavity **64**, a third cavity **66**, an outer surface **68**, and an inner surface **69**.

The first portion **36** of the housing **16** extends from the distal end **32** toward the proximal end **30** of the housing **16** and to the second portion **38**. The second portion **38** of the housing **16** extends from the first portion **36** toward the proximal end **30** of the housing **16** to the third portion **40**. The third portion **40** extends from the second portion **38** to the proximal end **30** of the housing **16**. Thus, the second portion **38** is disposed between the first portion **36** and the third portion **40**. The first portion **36** has a first outside diameter **37**, the second portion **38** has a second outside diameter **39**, and the third portion **40** has a third outside diameter **41**. The first outside diameter **37** is greater than the second outside diameter **39** creating the first shoulder **42**. The second outside diameter **39** is greater than the third outside diameter **41** creating the second shoulder **44**.

The passageway **46** extends through the housing **16** from the proximal end **30** to the distal end **32** of the housing **16**. The passageway **46** has a first inside diameter **45** at the proximal end **30** of the housing **16** and a second inside diameter **47** at the distal end **32** of the housing **16**. The first inside diameter **45** is less than the second inside diameter **47** creating the third shoulder **48** within the passageway **46**. The passageway **46** is sized and configured to receive a portion of the connector **28** and the sleeve **20**, as described in more detail herein.

The groove **50** is defined on the third portion **40** of the housing **16** and extends into the housing body **34** toward the passageway **46** and around the entire circumference of the outer surface **68** of the housing **16**. However, alternative embodiments can include a groove that extends about a portion of the circumference of the outer surface of a housing. The groove **50** is sized and configured to receive a portion of the actuator **18** (e.g., protuberance **82**). The tapered proximal end **30** of the housing **16** is sized and configured to be advanced proximally over the protuberance **82** defined by the actuator **18** such that the protuberance **82** can be disposed within the groove **50**. The groove **50** and the protuberance **82** cooperatively provide a mechanism for moveably attaching the actuator **18** to the housing **16** (e.g., snap fit configuration).

The plurality of recesses **52** is defined on the third portion **40** of the housing **16** and is disposed around the entire circumference of the outer surface **68** of the housing **16**. However, alternative embodiments can include a recess, or a plurality of recesses, that extend around a portion of the circumference of a housing. Each recess of the plurality of recesses **52** is sized and configured to receive a portion of a rib (e.g., first rib **84**, second rib **86**, third rib **88**) defined by the actuator **18**, as described below. The plurality of recesses **52** provides a mechanism for maintaining the position of the actuator **18** on the housing **16** (e.g., first position, second position).

While a plurality of recesses **52** has been illustrated as defined on the third portion **40** of the housing **16**, a selective fluid barrier valve device can include any suitable number of recesses defined at any suitable location on a housing. Skilled artisans will be able to select a suitable number of recesses to define on a housing and a suitable location to position each recess according to a particular embodiment based on various considerations, including the structural arrangement of an actuator of an embodiment. Example number of recesses considered suitable to include on a housing include one, at least one, two, a plurality, three, four, five, six, and any other number considered suitable for a particular embodiment. Example locations considered suitable to position a recess, or a plurality of recesses, on a housing include on the first portion of the housing, on the second portion of the housing, and/or on the third portion of the housing.

The protuberance **54** is defined within the passageway **46** on the first portion **36** of the housing **16** and extends toward the lengthwise axis **11** of the selective fluid barrier valve device **10**. The protuberance **54** extends around the entire circumference of the inner surface **69** of the housing **16** and is sized and configured to be received by the groove **156** define by the connector **28**, as described in more detail herein. However, alternative embodiments can include a housing that defines a protuberance that extends around a portion of the circumference of the inner surface of the housing. The protuberance **54** provides a mechanism for releasably attaching the housing **16** to the connector **28** (e.g., snap fit configuration).

Each of the first opening **56**, the second opening **58**, and the third opening **60** extends through the housing body **34** and provides access to the passageway **46**. Each of the openings **56**, **58**, **60** is sized and configured to receive a portion of a wire member (e.g., first wire member **22**, second wire member **24**, third wire member **26**). The first opening **56** is disposed a first distance from the second opening **58**, the second opening **58** is disposed a second distance from the third opening **60**, and the third opening **60** is disposed a third distance from the first opening **56**. In the illustrated embodiment, the first distance, the second distance, and the third distance are equal to one another. However, alternative embodiments can include a first opening that is disposed a first distance from a second opening, the second opening is disposed a second distance from a third opening, and the third opening is disposed a third distance from the first opening such that the first distance is different than the second distance and the second distance is the same as, or different than, the third distance. Thus, alternative embodiments can include a plurality of openings such that a first distance between a first opening and a second opening is different than a second distance between the second opening and a third opening, or between the second opening and the first opening.

In the illustrated embodiment, each of the openings **56**, **58**, **60** is elongated such that the opening has a length around the circumference of the housing **16** that is greater than the height of the opening. This provides a mechanism for moving the actuator **18** from the first position to the second position such that each of the wire members **56**, **58**, **60** can

be moved within its respective opening and from its first configuration to its second configuration, as described in more detail herein.

Each of the first cavity **62**, the second cavity **64**, and the third cavity **66** extends into the housing body **34** from the inner surface **69** and is sized and configured to receive a portion of a wire member (e.g., first wire member **22**, second wire member **24**, third wire member **26**). The first cavity **62** is disposed a first distance from the second cavity **64**, the second cavity **64** is disposed a second distance from the third cavity **66**, and the third cavity **66** is disposed a third distance from the first cavity **62**. In the illustrated embodiment, the first distance, the second distance, and the third distance are equal to one another and each of the first distance, the second distance, and the third distance is measured along the inner surface **69** of the housing **16**. However, alternative embodiments can include a first cavity that is disposed a first distance from a second cavity, the second cavity is disposed a second distance from a third cavity, and the third cavity is disposed a third distance from the first cavity such that the first distance is different than the second distance and the second distance is the same as, or different than, the third distance. Thus, alternative embodiments can include a plurality of cavities such that a first distance between a first cavity and a second cavity is different than a second distance between the second cavity and a third cavity, or between the second cavity and the first cavity.

In the illustrated embodiment, each of the cavities **62**, **64**, **66** extends into the housing body **34** from an opening defined on the inner surface **69** of the housing **16** toward the outer surface **68** and toward the distal end **32** of the housing **16**. The opening of each of the first cavity **62**, second cavity **64**, and the third cavity **66** is disposed on a plane that is disposed orthogonal to the lengthwise axis **11** of the selective fluid barrier valve device **10**. However, alternative embodiments can include a housing that defines a plurality of cavities such that at least one, or more than one, cavity is defined on a first plane that is disposed orthogonal to the lengthwise axis of the selective fluid barrier valve device and at lease one, or more than one, cavity is disposed on a second plane that is different than the first plane and is disposed orthogonal to the lengthwise axis of the selective fluid barrier valve device. Each of the cavities **62**, **64**, **66** has a lengthwise axis that extends at an angle **67** relative to the lengthwise axis **11** of the selective fluid barrier valve device **10** (i.e., a plane that contains the lengthwise axis **11** of the selective fluid barrier valve device **10**). In the illustrated embodiment, the angle **67** is oblique and equal to 35 degrees. However, alternative embodiments can include a cavity disposed at any suitable angle relative to a lengthwise axis of a selective fluid barrier valve device (i.e., a plane that contains the lengthwise axis of a selective fluid barrier valve device), such as angles that are equal to, substantially equal to, or about 35 degrees, angles that are oblique, angles that are obtuse, angles that are acute, and any other angle considered suitable for a particular embodiment. Alternatively, a cavity can be disposed parallel to the lengthwise axis of a selective fluid barrier valve device. Any angle that is capable of securing an end of a wire member and does not impart kinking or excessive stress on the wire member is considered suitable.

While the housing **16** has been illustrated as having a particular structural arrangement, a housing can have any suitable structural arrangement and skilled artisans will be able to select a suitable structural arrangement for a housing according to a particular embodiment based on various considerations, including the number of wire members included in a selective fluid barrier valve device. For example, while a groove has been illustrated, a housing body can define any suitable structure capable of providing a mechanism to moveably attach an actuator to a housing, such as a protuberance that is received by a groove defined by the actuator. While the housing **16** has been illustrated as having a tapered proximal end **30**, alternative embodiments can include a housing that does not define a tapered proximal end. While the housing body **34** has been illustrated as defining a plurality of openings **56**, **58**, **60** and a plurality of cavities **62**, **64**, **66**, a housing body can define any suitable number of openings and/or cavities, such as one, at least one, two, a plurality, three, four, five, six, and any other number considered suitable for a particular embodiment. The number of openings and cavities defined by a housing can be based on the number of wire members included in a selective fluid barrier valve device.

In the illustrated embodiment, and as shown in FIGS. **1**, **2**, **4**, and **5**, the actuator **18** has a proximal end **70**, a distal end **72**, and an actuator body **74** that defines a plurality of recesses **76**, a passageway **78**, a shoulder **80**, a protuberance **82**, a first rib **84**, a second rib **86**, a third rib **88**, a first cavity **90**, a second cavity **92**, a third cavity **94**, an outer surface **96**, and an inner surface **98**. The actuator **18** is movably attached to the housing **16** and is moveable between a first position and a second position.

In the illustrated embodiment, the actuator **18** is a rotatable member **29** that can be rotated on the housing **16** around the lengthwise axis **11** of the selective fluid barrier valve device **10**. However, while a rotatable member **29** has been illustrated, a selective fluid barrier valve device can include any suitable actuator capable of moving the selective fluid barrier valve device between a first configuration and a second configuration. Skilled artisans will be able to select a suitable actuator to include on a selective fluid barrier valve device according to a particular embodiment based on various considerations, including the number of wire members included in the selective fluid barrier valve device and/or the structural arrangement of the housing. Example actuators considered suitable to include on a selective fluid barrier valve device include rotatable actuators, linear actuators, slidable actuators, pivotable actuators, levers, and any other actuator considered suitable for a particular embodiment.

Each recess of the plurality of recesses **76** extends into the actuator body **74** from the outer surface **96** toward the inner surface **98** and is sized and configured to receive a portion of a finger of a user. Each recess of the plurality of recesses **76** provides an ergonomical structure that can be used to rotate the actuator **18** on the housing **16**. Optionally, the plurality of recesses **76** can be omitted from the actuator **18**.

The passageway **78** extends through the actuator **18** from the proximal end **70** to the distal end **72** of the actuator **18**. The passageway **78** has a first portion **77** and a second portion **81**. The first portion **77** extends from the distal end **72** of the actuator **18** toward the proximal end **70** of the actuator **18**. The second portion **81** extends from the first portion **77** to the proximal end **70** of the actuator **18**. The first portion **77** has a first inside diameter **79** and the second portion **81** and has a second inside diameter **83**. The first inside diameter **79** is greater than the second inside diameter **83** creating the shoulder **80** within the passageway **78**. The passageway **78** is sized and configured to receive a portion of the housing **16**. The first portion **77** is sized and configured to receive the second portion **38** of the housing **16** and the second portion **81** is sized and configured to receive the third portion **40** of the housing **16**.

The protuberance **82** extends from the inner surface **98** into the passageway **78** and around the entire circumference of the inner surface **98**. However, alternative embodiments can include a protuberance that extends around a portion of the inner surface of the passageway defined by an actuator. The protuberance **82** is sized and configured to be received by the groove **50** defined by the housing **16** such that when the protuberance **82** is disposed within the groove **50** the actuator **18** is moveably attached to the housing **16** (e.g., a snap fit attachment between the housing **16** and the actuator **18** is achieved).

Each of the first rib **84**, the second rib **86**, and third rib **88** has a shaft **100** and a protuberance **102** and is moveable within the passageway **78**. The shaft **100** has a first end **104** attached to the actuator body **74** and a second end **106** that is free of attachment to the actuator body **74**. The protuberance **102** extends from the shaft **100** and toward the lengthwise axis **11** of the selective fluid barrier valve device **10**. The protuberance **102** is sized and configured to be received by a recess of the plurality of recesses **52** defined by the housing **16**.

This structural arrangement provides a mechanism for moving the actuator **18** between its first position and its second position on the housing **16** and maintaining the position of the actuator **18** when no outside force is being applied to the actuator **18**. In the first position, each of the ribs **84**, **86**, **88** is disposed in a recess of the plurality of recesses **52**. For example, the first rib **84** is disposed in a first recess of the plurality of recesses **52**, the second rib **86** is disposed in a second recess of the plurality of recesses **52**, and the third rib **88** is disposed in a third recess of the plurality of recesses **52**. As the actuator **18** is moved from its first position to its second position, each of the ribs **84**, **86**, **88** is advanced from its respective recess of the plurality of recesses **52** to another, different, recess of the plurality of recesses **52**. For example, the first rib **84** is advanced to a fourth recess of the plurality of recesses **52** that is different than the first recess of the plurality of recesses **52**, the second rib **86** is advanced to a fifth recess of the plurality of recesses **52** that is different than the second recess of the plurality of recesses **52**, and the third rib **88** is advanced to a sixth recess of the plurality of recesses **52** that is different than the third recess of the plurality of recesses **52**. When a protuberance **102** is disposed within a recess of the plurality of recesses **52**, a degree of resistance to movement of the actuator **18** relative to the housing **16** is provided, which prevents the selective fluid barrier valve device **10** from moving from its second configuration to its first configuration without the application of force on the actuator **18**. The plurality of recesses **52** provides various resting positions for each protuberance **102** and also provides tactile feedback to a user to indicate that the actuator **18** is being advanced around the circumference of the housing **16**.

Optionally, the housing body and/or the actuator body can define any suitable structure that prevents the actuator from being moved beyond the second position (e.g., a location in which the sleeve **20** is in a closed configuration) or in a direction that could damage the device (e.g., in a counterclockwise direction when the actuator is in the first position). For example, the housing body can define a first protuberance and a second protuberance and the actuator can define a third protuberance. Each of the first protuberance and the second protuberance is disposed on the third portion of the housing and extends outward from the outer surface of the housing and away from the lengthwise axis of the housing. The third protuberance defined by the actuator extends outward from the inner surface of the actuator and toward the lengthwise axis of the actuator. When the selective fluid barrier valve device is assembled, the third protuberance is disposed between the first protuberance and the second protuberance defined by the housing such that the actuator is prevented from moving beyond where the third protuberance contacts the first protuberance and where the third protuberance contacts the second protuberance.

While a plurality of recesses **52** defined on the housing **16** and a plurality of ribs **84**, **86**, **88** have been illustrated as providing a mechanism for maintaining the position of the actuator **18** relative to the housing **16** when no outside force is applied to the actuator **18**, any suitable structural configuration capable of allowing movement between an actuator and a housing and maintaining the position of the actuator relative to the housing when no outside force is applied to the actuator can be used. Skilled artisans will be able to select a suitable structural configuration to include on a selective fluid barrier valve device to maintain the position of an actuator relative to a housing when no outside force is being applied to the actuator according to a particular embodiment based on various considerations, including the material(s) that forms the actuator and/or the housing. For example, alternative embodiments can include a housing that defines a plurality of ribs such that each rib of the plurality of ribs is sized and configured to be received by a recess of a plurality of recesses defined by an actuator. Alternative to the actuator defining a plurality of ribs, an actuator can define one or more cavities that extend from the inner surface of the actuator and toward the outer surface. Each cavity is sized and configured to receive a biasing device (e.g., spring) and an engagement member. The biasing device is disposed between the end of the cavity and the engagement member. The engagement member is biased toward the housing and is sized and configured to be contained within the cavity such that a portion of the engagement member extends beyond the inner surface of the actuator and contacts the outer surface of the housing (e.g., can interact with the plurality of recesses defined by the housing to maintain the position of the actuator relative to the housing). The engagement member can comprise any suitable component having any suitable structural configuration. For example, the engagement member can comprise a spherical member, a ball, a rounded member, or any other suitable structure that is capable of interacting with the plurality of recesses defined by the housing. The engagement member can be free of attachment to the biasing member, or can be attached to the biasing member using any suitable technique or method, such as those described herein.

Each of the first cavity **90**, the second cavity **92**, and the third cavity **94** extends into the actuator body **74** from the inner surface **98** toward the outer surface **96** and is sized and configured to receive a portion of a wire member (e.g., first wire member **22**, second wire member **24**, third wire member **26**). In the embodiment illustrated, each of the cavities **90**, **92**, **94** is defined on the shoulder **80** of the actuator **18** and extends from an opening defined on the shoulder **80** and toward the proximal end **70** of the actuator **18**. However, alternative embodiments can define one or more cavities on any other portion of the inner surface of the actuator. The first cavity **90** is disposed a first distance from the second cavity **92**, the second cavity **92** is disposed a second distance from the third cavity **94**, and the third cavity **94** is disposed a third distance from the first cavity **90**. In the illustrated embodiment, the first distance, the second distance, and the third distance are equal to one another and each of the first distance, the second distance, and the third distance is

measured along the inner surface **98** of the actuator **18**. However, alternative embodiments can include a first cavity that is disposed a first distance from a second cavity, the second cavity is disposed a second distance from a third cavity, and the third cavity is disposed a third distance from the first cavity such that the first distance is different than the second distance and the second distance is the same as, or different than, the third distance. Thus, alternative embodiments can include a plurality of cavities such that a first distance between a first cavity and a second cavity is different than a second distance between the second cavity and a third cavity, or between the second cavity and the first cavity.

The openings of each of the cavities **90**, **92**, **94** are disposed on a plane that is disposed orthogonal to the lengthwise axis **11** of the selective fluid barrier valve device **10**. However, alternative embodiments can include an actuator that defines a plurality of cavities such that at least one, or more than one, cavity is defined on a first plane that is disposed orthogonal to the lengthwise axis of the selective fluid barrier valve device and at lease one, or more than one, cavity is disposed on a second plane that is different than the first plane and is disposed orthogonal to the lengthwise axis of the selective fluid barrier valve device. Each of the cavities **90**, **92**, **94** has a lengthwise axis **107** that is disposed at an angle relative to the lengthwise axis **11** of the selective fluid barrier valve device **10** (i.e., a plane that contains the lengthwise axis **11** of the selective fluid barrier valve device **10**). In the illustrated embodiment, the axis **107** is parallel to the lengthwise axis **11** of the selective fluid barrier valve device **10**. However, alternative embodiments can include a cavity that is disposed at any suitable angle relative to the lengthwise axis of a selective fluid barrier valve device (i.e., a plane that contains the lengthwise axis of a selective fluid barrier valve device), such as angles that are equal to, substantially equal to, or about 0 degrees, angles that are oblique, angles that are obtuse, angles that are acute, and any other angle considered suitable for a particular embodiment. Any angle that is capable of securing an end of a wire member and does not impart kinking or excessive stress on the wire member is considered suitable

While the actuator **18** has been illustrated as having a particular structural arrangement, an actuator can have any suitable structural arrangement and skilled artisans will be able to select a suitable structural arrangement for an actuator according to a particular embodiment based on various considerations, including the number of wire members included in a selective fluid barrier valve device. For example, while a protuberance has been illustrated, an actuator body can define any suitable structure capable of providing a mechanism to moveably attach an actuator to a housing, such as a groove that is sized and configured to receive a protuberance defined by the housing. While the actuator body **74** has been illustrated as defining a plurality of ribs **84**, **86**, **88** and a plurality of cavities **90**, **92**, **94**, an actuator body can define any suitable number of ribs and/or cavities, such as one, at least one, two, a plurality, three, four, five, six, and any other number considered suitable for a particular embodiment.

In the illustrated embodiment, and as shown in FIG. **2**, the sleeve **20** has a proximal end **110**, a distal end **112**, a lengthwise axis **113**, and a sleeve body **114** that defines a passageway **116**, a shaft **118**, a flange **120**, an outer surface **121**, and an inner surface **122**. The distal end **112** of the sleeve **20** is disposed between the housing **16** and the connector **28** and the proximal end **112** of the sleeve **20** is disposed within the passageway **46** defined by the housing **16**. The flange **120** of the sleeve **20** contacts the distal end **32** of the housing **16** and, when the connector **28** is attached to the housing **16**, the distal end **112** of the sleeve **20** is fixed relative to the housing **16**. The sleeve **20** is moveable between a first configuration and a second configuration, as described in more detail herein.

The passageway **116** extends through the sleeve **20** from the proximal end **110** to the distal end **112** of the sleeve **20** and is sized and configured to receive a medical device. The passageway **116** is moveable between a first configuration, as illustrated in FIGS. **8**A and **10**A, and a second configuration, as illustrated in FIGS. **8**C and **10**C. In the first configuration, the passageway **116** defined by the sleeve **20** is open such that fluid can pass through the passageway. In the second configuration, the passageway **116** defined by the sleeve **20** is closed such that fluid is prevented from passing through the passageway **116**.

The shaft **118** extends from the proximal end **110** to the distal end **112** of the sleeve **20** and is sized and configured to be received by the passageway **46** defined by the housing **16**. The flange **120** extends from the shaft **118** and away from the lengthwise axis **113** of the sleeve **20**. The flange **120** provides a mechanism for releasably attaching the sleeve **20** between the housing **16** and the connector **28** and for preventing proximal advancement of the sleeve **20** beyond where the flange **120** contacts the third shoulder **48** defined by the housing body **34**. Optionally, the sleeve body can define one or more recesses and/or ridges on the outer surface of the sleeve to aid in moving the sleeve from the first configuration to the second configuration. For example, each recess can be sized and configured to receive a portion of a wire member. This optional structural configuration provides a mechanism for positioning each wire member at a particular location on the outer surface of the sleeve (e.g., within a recess).

The sleeve **20** can be formed of any suitable material and using any suitable manufacturing technique, and skilled artisans will be able to select a suitable material and technique to form a sleeve according to a particular embodiment based on various considerations, including the material(s) that forms the housing of an embodiment. Example materials considered suitable to form a sleeve include biocompatible materials, materials that can be made biocompatible, compliant materials, elastomeric materials, polymers, polyurethanes, polyisoprene, polyethylene, polyvinyl chloride, polystyrene, silicone, silicone blends, and any other material considered suitable for a particular embodiment. Example techniques considered suitable to form a sleeve include injection molding, casting, extrusion, and any other technique considered suitable for a particular embodiment.

The first wire member **22** has a first end **124** and a second end **126**. The first end **124** of the first wire member **22** is attached to the housing **16** and is disposed within the first cavity **62** defined by the housing **16**. The second end **126** of the first wire member **22** is attached to the actuator **18** and is disposed within the first cavity **90** defined by the actuator **18**. The first wire member **22** extends from the first end **124** disposed within the first cavity **62** defined by the housing **16**, around a portion of the outer surface **121** of the sleeve **20** between the housing **16** and the sleeve **20**, through the first opening **56** defined by the housing **16**, and to the second end **126** disposed within the first cavity **90** defined by the actuator **18**. When the first wire member **22** is in the first configuration, the portion of the first wire member **22** that extends around the outer surface **121** of the sleeve **20** is disposed at an oblique angle relative to the lengthwise axis

11 of the selective fluid barrier valve device 10 (i.e., a plane that contains the lengthwise axis 11 of the selective fluid barrier valve device 10).

The first end 124 of the first wire member 22 is disposed a first distance from the proximal end 30 of the housing 16 and the second end 126 of the first wire member 24 is disposed a second distance from the proximal end 30 of the housing 16. A portion of the first wire member 22 disposed between the first end 124 and the second end 126 (i.e., the portion that extends around the sleeve 20) is disposed a third distance from the proximal end 30 of the housing 16. In the illustrated embodiment, the third distance is less than the first distance and the second distance. However, alternative embodiments can include a wire member that has a portion disposed between the first end and the second end of the wire member that is disposed a distance from the proximal end of the housing that is equal to, substantially equal to, or greater than the distance the first end and/or the second end of the wire member is disposed from the proximal end of the housing.

The second wire member 24 has first end 128 and a second end 130. The first end 128 of the second wire member 24 is attached to the housing 16 and is disposed within the second cavity 64 defined by the housing 16. The second end 130 of the second wire member 24 is attached to the actuator 18 and is disposed within the second cavity 92 defined by the actuator 18. The second wire member 24 extends from the first end 128 disposed within the second cavity 64 defined by the housing 16, around a portion of the outer surface 121 of the sleeve 20 between the housing 16 and the sleeve 20, through the second opening 58 defined by the housing 16, and to the second end 130 disposed within the second cavity 92 defined by the actuator 18. When the second wire member 24 is in the first configuration, the portion of the second wire member 24 that extends around the outer surface 121 of the sleeve 20 is disposed at an oblique angle relative to the lengthwise axis 11 of the selective fluid barrier valve device 10 (i.e., a plane that contains the lengthwise axis 11 of the selective fluid barrier valve device 10).

The first end 128 of the second wire member 24 is disposed a first distance from the proximal end 30 of the housing 16 and the second end 130 of the second wire member 24 is disposed a second distance from the proximal end 30 of the housing 16. A portion of the second wire member 24 disposed between the first end 128 and the second end 130 (e.g., the portion that extends around the sleeve 20) is disposed a third distance from the proximal end 30 of the housing 16. In the illustrated embodiment, the third distance is less than the first distance and the second distance. However, alternative embodiments can include a second wire member that has a portion disposed between the first end and the second end of the wire member that is disposed a distance from the proximal end of the housing that is equal to, substantially equal to, or greater than the distance the first end and/or the second end of the wire member is disposed from the proximal end of the housing.

The third wire member 26 has a first end 132 and a second end 134. The first end 132 of the third wire member 26 is attached to the housing 16 and is disposed within the third cavity 66 defined by the housing 16. The second end 134 of the third wire member 26 is attached to the actuator 18 and is disposed within the third cavity 94 defined by the actuator 18. The third wire member 26 extends from the first end 132 disposed within the third cavity 66 defined by the housing 16, around a portion of the outer surface 121 of the sleeve 20 between the housing 16 and the sleeve 20, through the third opening 60 defined by the housing 16, and to the second end 134 disposed within the third cavity 94 defined by the actuator 18. When the third wire member 26 is in the first configuration, the portion of the third wire member 26 that extends around the outer surface 121 of the sleeve 20 is disposed at an oblique angle relative to the lengthwise axis 11 of the selective fluid barrier valve device 10 (i.e., a plane that contains the lengthwise axis 11 of the selective fluid barrier valve device 10). Alternatively, one or more of the wire members included in a selective fluid barrier valve device can be passed through a portion of the sleeve body. For example, alternative embodiments can include a sleeve that defines one or more protuberances that extend from the outer surface of the sleeve and along a portion of the circumference of the outer surface of the sleeve. Each protuberance defines a passageway sized and configured to receive a portion of a wire member such that the wire member can be passed through the passageway defined by a protuberance.

The first end 132 of the third wire member 26 is disposed a first distance from the proximal end 30 of the housing 16 and the second end 134 of the third wire member 26 is disposed a second distance from the proximal end 30 of the housing 16. A portion of the third wire member 26 disposed between the first end 132 and the second end 134 (e.g., the portion that extends around the sleeve 20) is disposed a third distance from the proximal end 30 of the housing 16. In the illustrated embodiment, the third distance is less than the first distance and the second distance. However, alternative embodiments can include a third wire member that has a portion disposed between the first end and the second end of the wire member that is disposed a distance from the proximal end of the housing that is equal to, substantially equal to, or greater than the distance the first end and/or the second end of the wire member is disposed from the proximal end of the housing.

Attachment between a wire member and a housing and/or an actuator can be accomplished using any suitable method or technique, and skilled artisans will be able to select a suitable method or technique to attach a wire member to a housing and/or an actuator according to a particular embodiment based on various considerations, including the material(s) that forms the wire member. Example methods and techniques considered suitable to attach a wire member to a housing and/or an actuator include using adhesives, welding, fusing, providing a friction fit between the wire member and the housing and/or actuator, and any other method or technique considered suitable for a particular embodiment. For example, a wire member can have an outside diameter that is greater than the inside diameter of a cavity defined by a housing and/or actuator such that a friction fit between the wire member and the housing and/or actuator can be achieved.

In the illustrated embodiment, and as shown in FIG. 8A, when the selective fluid barrier valve device 10 is in the first configuration each of the wire members 22, 24, 26 is disposed at an oblique angle 135 relative to the lengthwise axis 11 of the selective fluid barrier valve device 10 (i.e., a plane that contains the lengthwise axis 11 of the selective fluid barrier valve device 10) that is equal to 35 degrees. However, other angles are considered suitable, and skilled artisans will be able to select a suitable angle to position a wire member relative to a lengthwise axis of a selective fluid barrier valve device (i.e., a plane that contains the lengthwise axis 11 of the selective fluid barrier valve device 10) according to a particular embodiment based on various considerations, including the material(s) that forms the

sleeve of an embodiment. Example angles considered suitable to position a wire member relative to the lengthwise axis of a selective fluid barrier valve device (i.e., a plane that contains the lengthwise axis **11** of the selective fluid barrier valve device **10**) include angles equal to, substantially equal to, or about 35 degrees, 90 degrees, angles between about 0 degrees and about 180 degrees, angles between 0 degrees and 180 degrees, and any other angle considered suitable for a particular embodiment. For example, an alternative embodiment can include a sleeve that defines a flange on the proximal end of the sleeve that is in contact with the proximal end of the housing. The sleeve can include a distal end that is free to move along the lengthwise axis of the selective fluid barrier valve device. In this alternative embodiment, example angles considered suitable to position a wire member relative to the lengthwise axis of the selective fluid barrier valve device (i.e., a plane that contains the lengthwise axis **11** of the selective fluid barrier valve device **10**) include angles that are equal to, substantially equal to, or about 90 degrees, or greater than 90 degrees.

In the illustrated embodiment, each of the wire members **22**, **24**, **26** is moveable between a first configuration and a second configuration and is configured such that an opening **136** is defined within the housing **16** between the wire members **22**, **24**, **26**. In the first configuration, as shown in FIGS. **8**A, **9**A, and **10**A, each of the wire members **22**, **24**, **26** is in a relaxed configuration and has a portion disposed between its first end and its second end that is disposed a first distance from the lengthwise axis **11** of the selective fluid barrier valve device **10**. In the first configuration, the opening **136** has a first diameter **137**. In the second configuration, as shown in FIGS. **8**C, **9**C, and **10**C, each of the wire members **22**, **24**, **26** is in a tensioned configuration such that the portion of each of the wire members **22**, **24**, **26** that is disposed between its first end and its second end is disposed a second distance from the lengthwise axis **11** of the selective fluid barrier valve device **10**. The second distance is less than the first distance. In the second configuration, the opening **136** has a second diameter **138** that is less than the first diameter **137**.

Each of the wire members **22**, **24**, **26** can be formed of any suitable material and using any suitable manufacturing technique, and skilled artisans will be able to select a suitable material and technique to form a wire member according to a particular embodiment based on various considerations, including the material(s) that forms the sleeve of an embodiment. Example materials considered suitable to form a wire member include biocompatible materials, materials that can be made biocompatible, braided materials, wound materials, twisted materials, noncompliant materials, metals such as steel, stainless steel, titanium, nickel-titanium alloys, polymers, polypropylene, polyester, Nylon, polyethylene, polyvinyl chloride, polystyrene, compliant materials, flexible materials (e.g., materials that are relatively more flexible than the material that forms the housing), and any other material considered suitable for a particular embodiment. Example techniques considered suitable to form a wire member include injection molding, casting, extrusion, and any other technique considered suitable for a particular embodiment.

A wire member, such as the first wire member **22**, the second wire member **24**, and the third wire member **26**, can have any suitable structure and comprise any suitable number of strands and/or fibers that are twisted, or otherwise interconnected to one another. For example, a wire member can have a cross-sectional configuration that is round, substantially round, rectangular, square, oval, and any other configuration considered suitable for a particular embodiment and can include any suitable number of strands and/or fibers, such as one, at least one, two, a plurality, three, four, and any other number considered suitable for a particular embodiment. For example, a wire member can comprise a suture or a cable.

While the selective fluid barrier valve device **10** has been illustrated as including a first wire member **22**, a second wire member **24**, and a third wire member **26**, a selective fluid barrier valve device can include any suitable number of wire members. Skilled artisans will be able to select a suitable number of wire members to include in a selective fluid barrier valve device according to a particular embodiment based on various considerations, including the material(s) that forms the sleeve of an embodiment. Example number of wire members considered suitable to include in a selective fluid barrier valve device include one, at least one, two, a plurality, three, four, five, and any other number considered suitable for a particular embodiment.

In the illustrated embodiment, and as shown in FIG. **7**, the connector **28** has a proximal end **140**, a distal end **142**, a first portion **144**, a second portion **146**, a third portion **148**, and a connector body **150** that defines a passageway **152**, a recess **154**, a groove **156**, and a plurality of barbs **158**. Optionally, the connector **28** can be omitted from the selective fluid barrier valve device **10** and can be provided as a separate component.

The first portion **144** of the connector **28** extends from the distal end **142** toward the proximal end **140** of the connector **28**. The second portion **146** of the connector **28** extends from the first portion **144** and toward the proximal end **140** of the connector **28**. The third portion **148** of the connector **28** extends from the second portion **146** to the proximal end **140** of the connector **28**. Thus, the second portion **146** is disposed between the first portion **144** and the third portion **148**.

The passageway **152** extends through the connector **28** from the proximal end **140** to the distal end **142** of the connector **28** and is sized and configured to receive a medical device. When the selective fluid barrier valve device **10** is assembled, as illustrated in FIG. **1**, the passageway **116** defined by the sleeve **20** is in communication with the passageway **152** defined by the connector **28**.

The recess **154** extends into the third portion **148** of the connector **28** from the proximal end **140** and extends toward the distal end **142**. The recess **154** is sized and configured to receive a portion of the sleeve **20** (e.g., flange **120**). The groove **156** extends into the connector body **150** toward the lengthwise axis **11** of the selective fluid barrier valve device **10** and is disposed on the third portion **148** of the connector **28**. In the embodiment illustrated, the groove **156** extends around the entire circumference of the outer surface of the connector **28**. However, alternative embodiments can include a connector that defines a groove that extends around a portion of the outer surface of the connector. The groove **156** is sized and configured to receive a portion of the protuberance **54** defined by the housing **16** such that the connector **28** can be releasably attached to the housing **16** (e.g., a snap fit configuration is achieved between the housing **16** and the connector **28**). Optionally, the connector of an embodiment can be fixedly attached to the housing using any suitable technique or method, such as those described herein, such that it is not moveable relative to the housing.

The plurality of barbs **158** is defined on the first portion **144** of the connector **28**. Each barb of the plurality of barbs **158** extends from the outer surface of the connector **28** and

away from the lengthwise axis **11** of the selective fluid barrier valve device **10**. The plurality of barbs **158** provides a mechanism for releasably attaching another component (e.g., medical device, tubular member) to the connector **28**.

Each of the housing **16**, the actuator **18**, and the connector **28** can be formed of any suitable material and using any suitable manufacturing technique, and skilled artisans will be able to select a suitable material and technique to form a housing, an actuator, and a connector according to a particular embodiment based on various considerations, including the material(s) that forms the sleeve of an embodiment. Example materials considered suitable to form a housing, an actuator, and/or a connector include biocompatible materials, materials that can be made biocompatible, metals such as stainless steel, titanium, nickel-titanium alloys, polymers, polyethylene, polyvinyl chloride, polystyrene, polycarbonate, polyacetal, polypropylene, terpolymers, acrylonitrile butadiene styrene (ABS), and any other material considered suitable for a particular embodiment. Example techniques considered suitable to form a housing, an actuator, and/or a connector include injection molding, casting, and any other technique considered suitable for a particular embodiment.

While a snap fit attachment has been illustrated between the housing **16** and the actuator **18** and between the housing **16** and the connector **28**, any suitable form of attachment can be used between these components. Skilled artisans will be able to select a suitable form of attachment between a housing and an actuator and between a housing and a connector according to a particular embodiment based on various considerations, such as the materials that form the components. For example, an actuator can be positioned on a housing and a pin can be positioned in a cavity defined by the housing between the proximal end of the actuator and the proximal end of the housing to prevent the actuator from becoming free of the housing. Alternatively, or in combination with using a pin, a morse taper and/or threaded attachment can be used between a housing and a connector.

As illustrated in FIGS. **8**A, **9**A, and **10**A, when the actuator **18** is in the first position, the selective fluid barrier valve device **10** is in the first configuration, the passageway **116** defined by the sleeve **20** is open and fluid can pass through the passageway **116**, and each of the wire members **22**, **24**, **26** is in its first configuration. When the actuator **18** is in the first position, the proximal end **110** of the sleeve **20** is disposed a first distance from the proximal end **30** of the housing **16**, as shown in FIG. **8**A.

Movement of the actuator **18** from the first position to the second position can be accomplished in any suitable manner and using any suitable process and/or technique, such as by maintaining the position of the housing **16** and applying a rotational force to the actuator **18** in a clockwise direction, as illustrated by arrow **159** in FIG. **1**, such that each protuberance **102** of the ribs **84**, **86**, **88** of the actuator **18** moves from a recess of the plurality of recesses **76** to another recess of the plurality of recesses **76**. FIGS. **8**B, **9**B, and **10**B illustrate the configuration of the housing **16**, the sleeve **20**, and the wire members **22**, **24**, **26** when the actuator **18** is between the first position and the second position. In this configuration, each of the selective fluid barrier valve device **10**, the sleeve **20**, the first wire member **22**, the second wire member **24**, and the third wire member **26** is between the first configuration and the second configuration. The rotational force is applied to the actuator **18** until the actuator **18** is moved to its second position, and the sleeve **20** is moved to its second configuration such that the passageway **116** defined by the sleeve **20** is closed and fluid is prevented from passing through the passageway **116**. When the sleeve **20** is in the second configuration, the material that forms the sleeve **20** contacts itself to close the passageway **116** defined by the sleeve **20**. However, when one or more medical devices are passed though the passageway **116** defined by the sleeve **20**, the material that forms the sleeve **20** contacts a portion of one or more of the medical devices to close the passageway **116** such that fluid is prevented from passing through the passageway **116**.

FIGS. **8**C, **9**C, and **10**C illustrate the configuration of the housing **16**, the sleeve **20**, and the wire members **22**, **24**, **26** when the actuator **18** in the second position. In this configuration, each of the selective fluid barrier valve device **10**, the sleeve **20**, the first wire member **22**, the second wire member **24**, and the third wire member **26** is in the second configuration. As shown in FIG. **8**C, when the actuator **18** is in the second position, the proximal end **110** of the sleeve **20** is disposed a second distance from the proximal end **30** of the housing **16**. In the illustrated embodiment, the second distance is greater than the first distance such that the proximal end **110** of the sleeve **20** is advanced toward the distal end **32** of the housing **16** as the actuator **18** is moved from its first position to its second position. Thus, the proximal end **110** of the sleeve **20** is moveable relative to the housing **16**. However, alternative embodiments can include a sleeve that has a proximal end that is fixed relative to the housing.

Movement of the actuator **18** from its second configuration to its first configuration can be accomplished in any suitable manner and using any suitable process and/or technique, such as by maintaining the position of the housing **16** and applying a rotational force to the actuator **18** in a counterclockwise direction, opposite the directed illustrated by arrow **159**, such that each protuberance **102** of the ribs **84**, **86**, **88** of the actuator **18** moves from a recess of the plurality of recesses **76** to another recess of the plurality of recesses **76**. Movement of the actuator **18** from its second position to its first position moves the sleeve **20** from its second configuration in which the passageway **116** defined by the sleeve **20** is closed to fluid flow to the first configuration in which the passageway **116** defined by the sleeve **20** is open to fluid flow. Movement of the actuator **18** from its second position to its first position advances the proximal end **110** of the sleeve **20** toward the proximal end **30** of the housing **16**. In embodiments in which a connector is fixedly attached to a housing such that it is not moveable relative to the housing, the position of the housing and/or the connector can be maintained to accomplish movement of the actuator between its first position and its second position.

The selective fluid barrier valve device **10** is configured such that any suitable medical device can be passed through the passageway **116** defined by the sleeve **20** that has an outside diameter that is less than the inside diameter of the passageway **116** defined by the sleeve **20** when it is in the first configuration. Thus, the sleeve **20** of the selective fluid barrier valve device **10** can be sized and configured such that one or more medical devices can be passed through the passageway **116** defined by the sleeve **20**. The selective fluid barrier device **10** can be selectively moved between its first configuration and its second configuration based on the treatment being performed.

Optionally, a fluid barrier valve device can include one or more sealing members disposed distal to the sleeve. For example, a sealing member can be attached to the housing within the housing passageway and/or to the connector within the connector passageway. A sealing member can be formed of a soft, semi-rigid, or elastic material that is able to provide sufficient flexibility and resilience to the device

inserted through the sealing member, to stretch to the extent required to allow the device to traverse the sealing member, and to enable the opening created by the device to substantially return to a pre-stretched condition when the device is removed. For example, the sealing member can comprise a disc that has a predefined slit, or that omits the inclusion of a predefined slit. A sealing member can be formed of any suitable material, such as elastomers, ePFTE, nylon, polyethylene, silicone, urethane, other polymeric materials, the materials described herein, and any other material considered suitable for a particular embodiment. A sealing member can have any suitable configuration, including round, square, or any other configuration that is substantially similar to, or compatible with, the passageway defined by a housing and/or connector. A sealing member can have any suitable thickness, length, width, or diameter, depending on the structural arrangement of the selective fluid barrier valve device (e.g., housing, connector), and the structural arrangement of the devices that are intended to traverse the sealing member.

Optionally, a selective fluid barrier valve device can be biased to the second configuration such that the actuator is biased to the second position. This can be accomplished using any suitable structural configuration or component. For example, a torsion spring can be positioned between the housing and the actuator and can be attached to the housing and the actuator such that when no outside forces are applied to the selective fluid barrier valve device, the spring positions the actuator in the second position.

Alternative embodiments can include a sleeve that has a proximal end that is disposed proximal to the proximal end of the housing a first distance. In these alternative embodiments, as the actuator is moved from its first position to its second position, the proximal end of the sleeve advances toward the proximal end of the housing such that it is disposed a second distance from the distal end of the housing. The second distance can be less than, or greater than, the first distance. Alternative embodiments can be configured such that movement of the actuator in a counterclockwise direction moves the actuator from its first position to its second position and each of the sleeve and the wire members are moved from their respective first configurations to their second configurations and movement of the actuator in a clockwise direction moves the actuator from its second position to its first position and each of the sleeve and the wire members are moved from their respective second configurations to their first configurations.

An alternative to including a sleeve, such as the sleeve **20** described with respect to FIGS. **1**, **2**, **3**, **4**, **5**, **6**, **7**, **8**A, **8**B, **8**C, **9**A, **9**B, **9**C, **10**A, **10**B, and **10**C, a selective fluid barrier valve device can include a sleeve that has a proximal portion that is folded over on itself when the sleeve is in the first configuration. In these alternative embodiments, a portion, or the entirety, of the proximal end of the sleeve is attached to the housing (e.g., inner surface of the housing, outer surface of the housing, at the proximal end of the housing) and the proximal end of the sleeve is disposed distal to the portion of the sleeve when the sleeve is in the first configuration. The proximal end of the sleeve can be attached to the housing using any suitable method or technique, such as using adhesives, welding, fusing, and any other method or technique considered suitable for a particular embodiment. In these alternative embodiments, as the sleeve is moved from the first configuration to the second configuration, the portion of the sleeve disposed proximal to the proximal end of the sleeve advances toward the distal end of the housing. In the second configuration, the configuration of the portion of the sleeve will change based on the amount of the sleeve that is folded over on itself. For example, when the sleeve is in the second configuration, the portion of the sleeve can be disposed proximal to, or distal to, the proximal end of the sleeve. As the sleeve is moved from the second configuration to the first configuration, the portion of the sleeve advances away from the distal end of the housing. The inclusion of a sleeve that is attached to the housing prevents a device or fluid from being introduced between the sleeve and the housing during use.

FIGS. **11**, **12**, **13**, and **14** illustrate another selective fluid barrier valve device **210**. Selective fluid barrier valve device **210** is similar to the selective fluid barrier valve device **10** illustrated in FIGS. **1**, **2**, **3**, **4**, **5**, **6**, **7**, **8**A, **8**B, **8**C, **9**A, **9**B, **9**C, **10**A, **10**B, and **10**C and described above, except as detailed below. With respect to selective fluid barrier valve device **210**, reference numbers in FIGS. **11**, **12**, **13**, and **14** refer to the same structural element or feature referenced by the same number in FIGS. **1**, **2**, **3**, **4**, **5**, **6**, **7**, **8**A, **8**B, **8**C, **9**A, **9**B, **9**C, **10**A, **10**B, and **10**C, offset by 200. Thus, selective fluid barrier valve device **210** comprises a housing **216**, an actuator **218**, a sleeve **220**, and a connector **228**. The first wire member (e.g., first wire member **22**), second wire member (e.g., second wire member **24**), and third wire member (e.g., third wire member **26**) have been omitted from FIGS. **11**, **12**, **13**, and **14** for clarity.

In the illustrated embodiment, the housing body **234** defines a plurality of grooves **360** within the passageway **246** defined by the housing **216**. Each groove of the plurality of grooves **360** extends into the housing body **234** and away from the lengthwise axis **211** of the selective fluid barrier valve device **210** and is sized and configured to receive a protuberance of the plurality of protuberances **362** defined by the sleeve **220**, as described below.

In the illustrated embodiment, the sleeve body **314** defines a plurality of protuberances **362**, a first protrusion **364**, and a second protrusion **366**. The plurality of protuberances **362** extends outward from the outer surface **321** of the sleeve **220** and away from the lengthwise axis **211** of the selective fluid barrier valve device **210**. Each protuberance of the plurality of protuberances **362** is sized and configured to be received by a groove of the plurality of grooves **360** defined by the housing **216**. In the embodiment illustrated, each protuberance of the plurality of protuberances **362** is disposed in a groove of the plurality of grooves **360** defined by the housing **216**. This configuration provides a mechanism for providing additional support to the sleeve **220** during use.

Each of the first protrusion **364** and second protrusion **366** has a tapered configuration and extends from the inner surface **322** of the sleeve **220** and toward the lengthwise axis **211** of the selective fluid barrier valve device **210**. The first protrusion **364** has a first end **368** and a second end **369**. The second protrusion **366** has a first end **370** and a second end **371**. The first end **368** of the first protrusion **364** is disposed between the first end **370** of the second protrusion **366** and the proximal end **310** of the sleeve **220**. The second end **369** of the first protrusion **364** is disposed between the second end **371** of the second protrusion **366** and the distal end **312** of the sleeve **220**. The first end **370** of the second protrusion **366** is disposed between the first end **368** of the first protrusion **364** and the distal end **312** of the sleeve **220**. The second end **371** of the second protrusion **366** is disposed between the second end **369** of the first protrusion **364** and the proximal end **310** of the sleeve **220**. Each of the protrusions **364**, **366** provides structure within the passageway **316** of the sleeve **220** that prevents fluid from passing

through the passageway **316** when the selective fluid barrier valve device **210** is in the second configuration.

While the sleeve body **314** has been illustrated as defining a first protrusion **364** and a second protrusion **366** and each protrusion has been illustrated as having a tapered configuration, a sleeve can define any suitable number of protrusions having any suitable structural configuration. Skilled artisans will be able to select a suitable number of protrusions to define within the passageway of a sleeve and a suitable structural configuration for each protrusion according to a particular embodiment based on various considerations, including the medical device intended to be passed through the passageway defined by the sleeve. Example number of protrusions considered suitable to include within the passageway of a sleeve include one, at least one, two, a plurality, three, four, and any other number considered suitable for a particular embodiment. Example structural arrangements considered suitable for a protrusion include protrusions that have a cross-sectional configuration that is curved, tapered, rectangular, square, semi-circular, and any other configuration considered suitable for a particular embodiment.

While the housing body **234** has been illustrated as defining a plurality of grooves **360** and the sleeve body **314** has been illustrated as defining a plurality of protuberances **362**, a housing can define any suitable number of grooves and a sleeve can define any suitable number of protuberances. Example number of grooves and/or protuberances considered suitable to include on a selective fluid barrier valve device include one, at least one, two, a plurality, three, four, and any other number considered suitable for a particular embodiment. Alternative to the housing defining a plurality of grooves and the sleeve defining a plurality of protuberances, a housing body can define a protuberance, or a plurality of protuberances, and a sleeve body can define a groove, or a plurality of grooves.

FIGS. **15**, **16**, and **17** illustrate another selective fluid barrier valve device **410**. Selective fluid barrier valve device **410** is similar to the selective fluid barrier valve device **10** illustrated in FIGS. **1**, **2**, **3**, **4**, **5**, **6**, **7**, **8**A, **8**B, **8**C, **9**A, **9**B, **9**C, **10**A, **10**B, and **10**C and described above, except as detailed below. With respect to selective fluid barrier valve device **410**, reference numbers in FIGS. **15**, **16**, and **17** refer to the same structural element or feature referenced by the same number in FIGS. **1**, **2**, **3**, **4**, **5**, **6**, **7**, **8**A, **8**B, **8**C, **9**A, **9**B, **9**C, **10**A, **10**B, and **10**C, offset by **400**. Thus, selective fluid barrier valve device **410** comprises a housing **416**, an actuator **418**, a sleeve **420**, and a connector **428**.

In the illustrated embodiment, the selective fluid barrier valve device **410** omits the inclusion of a second wire member (e.g., second wire member **24**) and a third wire member (e.g., third wire member **26**). The housing **416** omits the inclusion of a third opening (e.g., third opening **60**), a first cavity (e.g., first cavity **62**), a second cavity (e.g., second cavity **64**), and a third cavity (e.g., third cavity **66**). The actuator **418** omits the inclusion of a second cavity (e.g., second cavity **92**) and a third cavity (e.g., third cavity **94**).

In the illustrated embodiment, the housing body **434** defines the first opening **456** adjacent to the second opening **458** and each of the first opening **456** and the second opening **458** are circular. However, a first opening and second opening can have any suitable structural arrangement, such as oval, rectangular, square, and can be positioned at any suitable location on a housing.

The first wire member **422** has a first end **524** attached to the actuator **418** within the first cavity **490** and a second end **526** attached to the first wire member **422** between the first end **524** and the second end **526**. The first wire member **422** extends from the first end **524** disposed within the first cavity **490** defined by the actuator **418**, through the first opening **456** defined by the housing **416**, around the outer surface **521** of the sleeve **420**, through the second opening **458** defined by the housing **416**, around the outer surface of the first wire member **422** and is attached to itself between the first end **524** and the second end **526**. Thus, the first wire member **422** defines a loop **574** at its second end **526** through which the first wire member **422** is disposed.

In the illustrated embodiment, the first wire member **422** is disposed orthogonally relative to the lengthwise axis **411** of the selective fluid barrier valve device **410** (i.e., a plane that contains the lengthwise axis **411** of the selective fluid barrier valve device) and is disposed around more than 50% of the outer surface **521** of the sleeve **422**. This provides a mechanism for moving the sleeve **420** from its first configuration to its second configuration. However, alternative embodiments can include a single wire member that is disposed around more than 75% of the outer surface of the sleeve or that is disposed around more than 100% of the outer surface of the sleeve. For example, the wire member can be positioned such that it extends at least one full revolution around the outer surface of the sleeve.

As the actuator **418** is moved from its first position to its second position, the first wire member **422** is moved from its first configuration to its second configuration and is pulled through the loop **574**, which moves the sleeve **420** from its first configuration to its second configuration. FIGS. **16** and **17** illustrate the sleeve **420** in the first configuration and the first wire member **422** in the first configuration.

FIGS. **18** and **19** illustrate another selective fluid barrier valve device **610**. Selective fluid barrier valve device **610** is similar to the selective fluid barrier valve device **10** illustrated in FIGS. **1**, **2**, **3**, **4**, **5**, **6**, **7**, **8**A, **8**B, **8**C, **9**A, **9**B, **9**C, **10**A, **10**B, and **10**C and described above, except as detailed below. With respect to selective fluid barrier valve device **610**, reference numbers in FIGS. **18** and **19** refer to the same structural element or feature referenced by the same number in FIGS. **1**, **2**, **3**, **4**, **5**, **6**, **7**, **8**A, **8**B, **8**C, **9**A, **9**B, **9**C, **10**A, **10**B, and **10**C, offset by **600**. Thus, selective fluid barrier valve device **610** comprises a housing **616**, an actuator (not shown), a sleeve **620**, a first wire member **622**, a second wire member **624**, a third wire member **626**, and a connector (not shown).

In the illustrated embodiment, the housing **616** omits the inclusion of a first cavity (e.g., first cavity **62**), a second cavity (e.g., second cavity **64**), and a third cavity (e.g., third cavity **66**) and the first wire member **622**, the second wire member **624**, and third wire member **626** have a configuration as described below.

The first wire member **622** has a first end (not shown) attached to the actuator within the first cavity and a second end **726** attached to the first wire member **622** between the first end and the second end **726** of the first wire member **622**. The first wire member **622** extends from the first end disposed within the first cavity defined by the actuator, through the first opening **656** defined by the housing **616**, around a portion of the outer surface **721** of the sleeve **620**, around the outer surface of the second wire member **624** and is attached to itself between the first end and the second end **726**. Thus, the first wire member **622** defines a loop **774** at its second end **726** through which the second wire member **624** is disposed.

The second wire member **624** has a first end (not shown) attached to the actuator within the second cavity and a second end **730** attached to the second wire member **624**

between the first end and the second end **730** of the second wire member **624**. The second wire member **624** extends from the first end disposed within the second cavity defined by the actuator, through the second opening **658** defined by the housing **616**, around a portion of the outer surface **721** of the sleeve **620**, around the outer surface of the third wire member **626** and is attached to itself between the first end and the second end **730**. Thus, the second wire member **624** defines a loop **776** at its second end **730** through which the third wire member **626** is disposed.

The third wire member **626** has a first end (not shown) attached to the actuator within the third cavity and a second end **734** attached to the third wire member **626** between the first end and the second end **734** of the third wire member **626**. The third wire member **626** extends from the first end disposed within the third cavity defined by the actuator, through the third opening **660** defined by the housing **616**, around a portion of the outer surface **721** of the sleeve **620**, around the outer surface of the first wire member **622** and is attached to itself between the first end and the second end **734**. Thus, the third wire member **626** defines a loop **778** at its second end **734** through which the first wire member **622** is disposed.

As the actuator is moved from its first position to its second position, each of the wire members **622**, **624**, **626** is moved from its first configuration to its second configuration. The first wire member **622** is pulled through the loop **778** defined by the third wire member **626** and the portion of the first wire member **622** that defines the loop **774** applies a force directed toward the first opening **656** on the second wire member **624**. The second wire member **624** is pulled through the loop **774** defined by the first wire member **622** and the portion of the second wire member **624** that defines the loop **776** applies a force directed toward the second opening **658** on the third wire member **626**. The third wire member **626** is pulled through the loop **776** defined by the second wire member **624** and the portion of the third wire member **626** that defines the loop **778** applies a force directed toward the third opening **660** on the first wire member **622**. This configuration moves the sleeve **620** from its first configuration to its second configuration as the actuator is moved from its first position to its second position and each of the wire members **622**, **624**, **626** is moved from its first configuration to its second configuration. FIG. **18** illustrates the sleeve **620** in the first configuration and each of the wire members **622**, **624**, **626** in the first configuration. FIG. **19** illustrates the sleeve **620** in the second configuration and each of the wire members **622**, **624**, **626** in the second configuration.

FIGS. **20**, **21**, and **22** illustrate another selective fluid barrier valve device **810**. Selective fluid barrier valve device **810** is similar to the selective fluid barrier valve device **10** illustrated in FIGS. **1**, **2**, **3**, **4**, **5**, **6**, **7**, **8**A, **8**B, **8**C, **9**A, **9**B, **9**C, **10**A, **10**B, and **10**C and described above, except as detailed below. With respect to selective fluid barrier valve device **810**, reference numbers in FIGS. **20**, **21**, and **22** refer to the same structural element or feature referenced by the same number in FIGS. **1**, **2**, **3**, **4**, **5**, **6**, **7**, **8**A, **8**B, **8**C, **9**A, **9**B, **9**C, **10**A, **10**B, and **10**C, offset by **800**. Thus, selective fluid barrier valve device **810** comprises a housing **816**, an actuator **818**, a sleeve **820**, a first wire member **822**, and a connector **828**.

In the illustrated embodiment, the actuator **818** of the selective fluid barrier valve device **810** is a slidable member **980** that is slidably disposed on the housing **816**. The selective fluid barrier valve device **10** omits the inclusion of a second wire member (e.g., second wire member **24**) and a third wire member (e.g., third wire member **26**) and the housing **816** omits the inclusion of a groove (e.g., groove **50**), a plurality of recesses (e.g., plurality of recesses **52**), a second opening (e.g., second opening **58**), a third opening (e.g., third opening **60**), a second cavity (e.g., second cavity **64**), and a third cavity (e.g., third cavity **66**).

In the illustrated embodiment, the first opening **856** defined by the housing body **834** extends from the outer surface **868** of the housing **816** to the inner surface **869** of the housing **816** and toward the proximal end **830** of the housing **816**. Thus, the first opening **856** has a lengthwise axis that is disposed at an angle relative to the lengthwise axis **811** of the selective fluid barrier valve device **810** (i.e., a plane that contains the lengthwise axis **811** of the selective fluid barrier valve device **810**).

The actuator **818** is slidably disposed on the third portion **840** of the housing **816** and is moveable between a first position and a second position. In the first position, the actuator **818** is disposed a first distance from the proximal end **830** of the housing **816**. In the second position, the actuator **818** is disposed a second distance from the proximal end **830** of the housing **816**. The first distance is greater than the second distance such that axial movement of the actuator **818** toward the proximal end **830** of the housing **816** moves the sleeve **820** from its first configuration to the second configuration. Alternatively, an actuator can be positioned on a selective fluid barrier valve device such that it is slidably disposed on the third portion of a housing and is moveable between a first position and a second position. In the first position, the actuator is disposed a first distance from the proximal end of the housing. In the second position, the actuator is disposed a second distance from the proximal end of the housing. The first distance is less than the second distance such that axial movement of the actuator toward the distal end of the housing moves the sleeve from its first configuration to the second configuration

The actuator **818** comprises a proximal end **981**, a distal end **982**, and an actuator body **983** that defines a passageway **984**, a cavity **985**, an outer surface **986**, and an inner surface **987**. The passageway **984** extends through the actuator **818** from the proximal end **981** to the distal end **982** of the actuator **818**. The cavity **985** extends from an opening on the inner surface **987** toward the outer surface **986** and toward the proximal end **981** of the actuator **818**. Thus, the cavity **985** has a lengthwise axis that is disposed at an angle relative to the lengthwise axis **811** of the selective fluid barrier valve device **810** (i.e., a plane that contains the lengthwise axis **811** of the selective fluid barrier valve device **810**).

The first wire member **822** has a first end **924** attached to the housing **816** within the cavity **862** and a second end **926** attached to the actuator **818** within the cavity **985**. The first wire member **822** extends from the first end **924** disposed within the cavity **862** defined by the housing **816**, around the outer surface **921** of the sleeve **820**, through the first opening **856** defined by the housing **816**, to the second end **926** disposed within the cavity **985** defined by the actuator **818**.

As the actuator **818** is moved from its first position to its second position, the first wire member **822** moves from its first configuration to the second configuration. The first wire member **822** is pulled through the first opening **856** defined by the housing **816** and the second end **926** of the first wire member **822** is advanced toward the proximal end **830** of the housing **816**. This advances the sleeve **820** from the first configuration in which the passageway **916** defined by the sleeve **820** is open and fluid can pass through the passageway **916** to the second configuration in which the passage-

way **916** defined by the sleeve **820** is closed and fluid is prevented from passing through the passageway **916**.

Methods of treatment are described herein. While the methods described herein are shown and described as a series of acts, it is to be understood and appreciated that the methods are not limited by the order of acts described and illustrated, as some acts may in accordance with these methods, be omitted, be repeated, or occur in different orders and/or concurrently with other acts described herein.

FIG. **23** is a flowchart representation of a method of treatment **1000** using a selective fluid barrier valve device.

A step **1002** comprises attaching a selective fluid barrier valve device to a first medical device that has a proximal end, a distal end, and a body that defines a lumen that extends from the proximal end to the distal end. The selective fluid barrier valve device comprises a housing, an actuator, a sleeve, a first wire member, a second wire member, a third wire member, and a connector. Another step **1004** comprises inserting the first medical device into a bodily passage such that the distal end of the first medical device is disposed within the bodily passage. Another step **1006** comprises inserting a second medical device that has a proximal end and a distal end through the selective fluid barrier valve device and the first medical device such that the distal end of the second medical device is disposed within the bodily passage. Another step **1008** comprises navigating the distal end of the second medical device to a point of treatment within the bodily passage. Another step **1010** comprises moving the actuator from the first position to the second position. Another step **1012** comprises performing treatment using the second medical device. Another step **1014** comprises moving the actuator from the second position to the first position. Another step **1016** comprises withdrawing the second medical device from the bodily passage, the first medical device, and the selective fluid barrier valve device. Another step **1018** comprises withdrawing the first medical device from the bodily passage.

Step **1002** can be accomplished using any suitable selective fluid barrier valve device, and skilled artisans will be able to select a suitable selective fluid barrier valve device to use in a method of treatment according to a particular embodiment based on various considerations, including the type of treatment being performed. Example selective fluid barrier valve devices considered suitable to use in a method of treatment include the selective fluid barrier valve devices described herein, such as selective fluid barrier valve device **10**, selective fluid barrier valve device **210**, selective fluid barrier valve device **410**, selective fluid barrier valve device **610**, selective fluid barrier valve device **810**, selective fluid barrier valve device **1110**, variations thereof, and any other selective fluid barrier valve device considered suitable for a particular method of treatment. An exemplary selective fluid barrier valve device that can be used to accomplish the methods, steps, alternative steps, and/or optional steps described herein is illustrated and described with respect to FIGS. **1**, **2**, **3**, **4**, **5**, **6**, **7**, **8**A, **8**B, **8**C, **9**A, **9**B, **9**C, **10**A, **10**B, and **10**C, and comprises a housing **16**, an actuator **18**, a sleeve **20**, a first wire member **22**, a second wire member **24**, a third wire member **26**, and a connector **28**. The selective fluid barrier valve device **10** is moveable between a first configuration and a second configuration, as described herein.

Step **1002** can be accomplished using any suitable medical device, and skilled artisans will be able to select a suitable medical device to use in a method of treatment according to a particular embodiment based on various considerations, including the type of treatment being performed. Example medical devices considered suitable to use in a method of treatment include tubular members, sheaths, cannulas, wire guides, and any other medical device considered suitable for a particular method of treatment. Step **1002** can be accomplished using a medical device that has any suitable length, structural configuration, and that is formed of any suitable material.

Step **1002** can be accomplished in any suitable manner and using any suitable process and/or technique, such as by inserting the distal end **142** of the connector **28** into the lumen defined by the first medical device and applying a force on the connector **28** that is directed toward the first medical device and maintaining the position of the first medical device, applying a force on the first medical device that is directed toward the connector **28** and maintaining the position of the connector **28**, or applying a force on the connector **28** that is directed toward the first medical device and concurrently applying a force on the first medical device that is directed toward the connector **28** until the first medical device and the connector are attached to one another and a sealed engagement is provided between the connector **28** and the medical device. Optionally, the first medical device can comprise a component of the selective fluid barrier valve device such that it is attached to the connector.

In embodiments in which the connector **28** is provided as a separate component, another step comprises attaching the connector **28** to the housing **16**. This step can be accomplished in any suitable manner and using any suitable process and/or technique, such as by positioning the proximal end **140** of the connector **28** at the distal end **32** of the housing **16** and applying a force on the housing **16** that is directed toward the connector **28** and maintaining the position of the connector **28**, by applying a force on the connector **28** that is directed toward the housing **16** and maintaining the position of the housing **16**, or by applying a force on the housing **16** that is directed toward the connector **28** and concurrently applying a force on the connector **28** that is directed toward the housing **16**.

Step **1004** can be accomplished in any suitable manner and using any suitable process and/or technique, such as by applying a force on the selective fluid barrier valve device **10** and/or the first medical device that is directed toward the bodily passage such that the distal end of the first medical device is disposed within the bodily passage.

An optional step that can be completed prior to step **1004** comprises introducing a wire guide having a wire guide proximal end and a wire guide distal end into a bodily passage such that the wire guide distal end is disposed within the bodily passage. This optional step can be accomplished in any suitable manner and using any suitable process and/or technique, such as by applying a force directed toward the bodily passage on any suitable portion of a wire guide such that the wire guide distal end is disposed within the bodily passage. This optional step can be accomplished using any suitable wire guide, formed of any suitable material, and having any suitable length, and skilled artisans will be able to select a suitable wire guide, material, and length for a wire guide according to a particular embodiment based on various considerations, including the bodily passage being treated.

Another optional step that can be completed comprises advancing the wire guide distal end to, or beyond, a point of treatment within the bodily passage. This optional step can be accomplished in any suitable manner and using any suitable process and/or technique, such as by applying a force directed toward the bodily passage on any suitable portion of the wire guide such that the wire guide distal end

is advanced distal to, or beyond, the point of treatment. Alternatively, a wire guide can be advanced proximal to, or to, a point of treatment. This step can be accomplished in any suitable manner and using any suitable process and/or technique, such as with the assistance of direct visualization of the wire guide (e.g., scope), transcutaneously, using an illuminated wire guide, a camera, or any other suitable visualization technique or through tactile feedback provided by the body of the ventilation tube.

In embodiments in which a wire guide is being used, an alternative to step **1004** comprises advancing the wire guide through the lumen defined by the first medical device and through the passageway defined by the sleeve and inserting the first medical device into a bodily passage such that the distal end of the first medical device is disposed within the bodily passage. This optional step can be accomplished in any suitable manner and using any suitable process and/or technique, such as by inserting the wire guide proximal end into and through the lumen defined by the first medical device and the passageway defined by the sleeve and applying a force directed toward the bodily passage on any suitable portion of the selective fluid barrier valve device **10**.

An optional step that can be completed subsequent to step **1004** comprises navigating the distal end of the first medical device to a point of treatment within the bodily passage. This optional step can be accomplished in any suitable manner and using any suitable process and/or technique, such as by applying a force on the selective fluid barrier valve device **10** and/or the first medical device that is directed toward the bodily passage.

Step **1006** can be accomplished in any suitable manner and using any suitable process and/or technique, such as by applying a force on the second medical device directed toward the bodily passage and by inserting the distal end of the second medical device through the passageway **152** defined by the connector **28**, through the passageway **116** defined by the sleeve **20**, and through the lumen defined by the first medical device until the distal end of the second medical device is disposed within the bodily passage. Step **1006** can be accomplished using any medical device, and skilled artisans will be able to select a suitable medical device to use in a method of treatment according to a particular embodiment based on various considerations, including the type of treatment being performed. Example medical devices considered suitable to pass through a selective fluid barrier valve device and to use in a method of treatment include catheters, balloon catheters, suction devices, medical device delivery devices, wire guides, and any other medical device considered suitable for a particular method of treatment. Step **1006** can be accomplished using a medical device that has any suitable length, structural configuration, and that is formed of any suitable material.

An optional step that can be completed prior to step **1006** comprises withdrawing the wire guide. This optional step can be accomplished in any suitable manner and using any suitable process and/or technique, such as by applying a force directed away from the bodily passage on any suitable portion of the wire guide such that the wire guide is withdrawn from the bodily passage. Alternatively, if the second medical device is intended to be passed over the wire guide, an alternative to step **1006** comprises introducing the proximal end of the wire guide through a lumen defined by the second medical device and inserting the second medical device through the selective fluid barrier valve device and the first medical device such that the distal end of the second medical device is disposed within the bodily passage. This alternative step can be accomplished in any suitable manner and using any suitable process and/or technique, such as by inserting the wire guide proximal end into and through the lumen defined by the second medical device and applying a force directed toward the bodily passage on any suitable portion of the second medical device. The force directed toward the bodily passage is applied such that the distal end of the second medical device is advanced and passed through the passageway defined by the connector, through the passageway defined by the sleeve, and through the lumen defined by the first medical device and is disposed within the bodily passage.

Step **1008** can be accomplished in any suitable manner and using any suitable process and/or technique, such as by applying a force on the second medical device that is directed toward the bodily passage such that the distal end of the second medical device is disposed at the point of treatment within the bodily passage. Step **1008** is accomplished such that the distal end of the second medical device is disposed within the bodily passage at, or adjacent to, the point of treatment (e.g., the location in which treatment is intended to be performed).

Alternatively, step **1008** can be accomplished such that the distal end of the second medical device is disposed near, proximal to, or distal to a point of treatment within the bodily passage. An optional step that can be completed subsequent to, or during the completion of step **1008**, comprises confirming the position of the distal end of the second medical device. This optional step can be accomplished using any suitable visualization technique. Example visualization techniques considered suitable include x-ray, fluoroscopy, ultrasound, direct visualization with a scope, magnetic resonance imaging, and any other visualization technique considered suitable for a particular embodiment.

An optional step comprises inserting a third medical device that has a proximal end and a distal end through the selective fluid barrier valve device and the first medical device such that the distal end of the third medical device is disposed within the bodily passage. This optional step can be accomplished in any suitable manner and using any suitable process and/or technique, such as by applying a force on the third medical device directed toward the bodily passage and by inserting the distal end of the third medical device through the passageway **152** defined by the connector **28**, through the passageway **116** defined by the sleeve **20**, and through the lumen defined by the first medical device until the distal end of the third medical device is disposed within the bodily passage. This optional step can be accomplished using any suitable medical device, such as those described herein. Any suitable number of medical device can be inserted through a selective fluid barrier valve device, such as one, at least one, two, a plurality, three, four, and any other number considered suitable for a particular method of treatment.

Another optional step comprises navigating the distal end of the third medical device to a point of treatment within the bodily passage. This optional step can be accomplished in any suitable manner and using any suitable process and/or technique, such as by applying a force on the third medical device directed toward the bodily passage such that the distal end of the third medical device is at, near, adjacent, distal to, or proximal to a point of treatment within the bodily passage.

Step **1010** can be accomplished in any suitable manner and using any suitable process and/or technique, such as by applying a rotational force on the actuator **18** while maintaining the position of the housing **16** such that the selective fluid barrier valve device **10** moves from the first configu-

ration to the second configuration. When the selective fluid barrier valve device **10** is in the second configuration, the sleeve **20** is in the second configuration such that the inner surface **122** of the sleeve **20** contacts the outer surface of the second medical device and fluid is prevented from passing through the sleeve **20**. When the sleeve **20** is in the second configuration, the second medical device is releasably attached to the sleeve **20** such that it cannot be withdrawn from the sleeve **20**. With respect to the selective fluid barrier valve device **10**, the rotational force is applied in clockwise direction about the lengthwise axis **11** of the selective fluid barrier valve device **10**.

Alternatively, in embodiments in which a wire guide is disposed through the passageway **116** defined by the sleeve **20**, when the sleeve **20** is in the second configuration, the inner surface **122** of the sleeve **20** will contact one or both of the wire guide and the second medical device and fluid is prevented from passing through the sleeve **20**. When the sleeve **20** is in the second configured, the second medical device and the wire guide are releasably attached to the sleeve **20** such that the second medical device and the wire guide cannot be withdrawn from the sleeve **20**.

In embodiments in which the selective fluid barrier valve device includes an actuator that is a slidable member, such as selective fluid barrier valve device **810**, step **1010** can be accomplished in any suitable manner and using any suitable process and/or technique, such as by applying a force on the distal end of the actuator that is directed toward the proximal end of the housing while maintaining the position of the housing such that the selective fluid barrier valve device moves from the first configuration to the second configuration. When the selective fluid barrier valve device is in the second configuration, the sleeve is in the second configuration such that the inner surface of the sleeve contacts the outer surface of the second medical device and fluid is prevented from passing through the sleeve. When the sleeve is in the second configuration, the second medical device is releasably attached to the sleeve such that it cannot be withdrawn from the sleeve.

In embodiments in which the selective fluid barrier valve device includes a second actuator, such as selective fluid barrier valve device **1110** shown in FIGS. **24**, **25**, **26**, and **27**, step **1010** can be accomplished in any suitable manner and using any suitable process and/or technique, such as by applying a rotational force on the second actuator **1260** while maintaining the position of the housing **1116** such that the selective fluid barrier valve device **1110** moves from the first configuration to the second configuration. When the selective fluid barrier valve device **1110** is in the second configuration, the sleeve **1120** is in the second configuration such that the inner surface of the sleeve **1120** contacts the outer surface of the second medical device and fluid is prevented from passing through the sleeve **1120**. When the sleeve **1120** is in the second configuration, the second medical device is releasably attached to the sleeve **1120** such that it cannot be withdrawn from the sleeve **1120**. With respect to the selective fluid barrier valve device **1110**, the rotational force is applied in clockwise direction about the lengthwise axis **1111** of the selective fluid barrier valve device **1110**.

Step **1012** can be accomplished by performing any suitable treatment and will be based on the medical device passed through the selective fluid barrier valve device **10** and the lumen of the first medical device. Any suitable treatment can be performed and skilled artisans will be able to select a suitable treatment to perform according to a particular embodiment based on various considerations, including the medical device that has been inserted through the selective fluid barrier valve device and the lumen defined by the first medical device. An example treatment considered suitable to perform includes balloon angioplasty. However, any other suitable treatment can be performed.

Step **1014** can be accomplished in any suitable manner and using any suitable process and/or technique, such as by applying a rotational force on the actuator **18** while maintaining the position of the housing **16** such that the selective fluid barrier valve device **10** moves from the second configuration to the first configuration. When the selective fluid barrier valve device **10** is in the first configuration, the sleeve **20** is in the first configuration such that fluid can pass through the passageway **116** defined by the sleeve **20** and the second medical device can be withdrawn from the sleeve **20**. With respect to the selective fluid barrier valve device **10**, the rotational force is applied in counterclockwise direction about the lengthwise axis **11** of the selective fluid barrier valve device **10**.

Alternatively, in embodiments in which a wire guide is disposed through the passageway **116** defined by the sleeve **20**, when the sleeve **20** is in the first configuration, the second medical device and/or the wire guide can be withdrawn from the sleeve **20**.

In embodiments in which the selective fluid barrier valve device includes an actuator that is a slidable member, such as selective fluid barrier valve device **810**, step **1014** can be accomplished in any suitable manner and using any suitable process and/or technique, such as by applying a force on the proximal end of the slidable member that is directed toward the distal end of the housing while maintaining the position of the housing such that the selective fluid barrier valve device moves from the second configuration to the first configuration. When the selective fluid barrier valve device is in the first configuration, the sleeve is in the first configuration such that fluid can pass through the passageway defined by the sleeve and the second medical device can be withdrawn from the sleeve.

In embodiments in which the selective fluid barrier valve device includes a second actuator, such as selective fluid barrier valve device **1110** shown in FIGS. **24**, **25**, **26**, and **27**, step **1014** can be accomplished in any suitable manner and using any suitable process and/or technique, such as by applying a rotational force on the second actuator **1260** while maintaining the position of the housing **1116** such that the selective fluid barrier valve device **1110** moves from the second configuration to the first configuration. When the selective fluid barrier valve device **1110** is in the first configuration, the sleeve **1120** is in the first configuration such that fluid can pass through the passageway defined by the sleeve **1120** and the second medical device can be withdrawn from the sleeve **1120**. With respect to the selective fluid barrier valve device **1110**, the rotational force is applied in counterclockwise direction about the lengthwise axis **1111** of the selective fluid barrier valve device **1110**.

Step **1016** can be accomplished in any suitable manner and using any suitable process and/or technique, such as by applying a force on the second medical device that is directed away from the bodily passage such that the second medical device is advanced proximally and is withdrawn from the first medical device, the selective fluid barrier valve device **10**, and the bodily passage.

In embodiments in which a wire guide is disposed through the passageway **116** defined by the sleeve **20**, an optional step comprises withdrawing the wire guide from the bodily passage and/or the selective fluid barrier valve device. This optional step can be accomplished in any suitable manner

and using any suitable process and/or technique, such as by applying a force on the wire guide that is directed away from the bodily passage such that the wire guide is advanced proximally and is withdrawn from the bodily passage, the first medical device, and/or the selective fluid barrier valve device **10**.

Step **1018** can be accomplished in any suitable manner and using any suitable process and/or technique, such as by applying a force on any suitable portion of the selective fluid barrier valve device **10** and/or the first medical device directed away from the bodily passage such that the first medical device is advanced proximally and is withdrawn from the bodily passage. Optionally, step **1018** can be accomplished in combination with step **1016**. Optionally, in embodiments in which a wire guide is disposed within the passageway **116** defined by the sleeve **20**, step **1018** can be accomplished in combination with the optional step of withdrawing the wire guide from the bodily passage.

An optional step comprises removing the selective fluid barrier valve device from the first medical device. This optional step can be accomplished in any suitable manner and using any suitable process and/or technique, such as by removing the distal end **142** of the connector **28** from the lumen defined by the first medical device by applying a force on the connector **28** that is directed away from the medical device while maintaining the position of the first medical device.

FIGS. **24**, **25**, **26**, and **27** illustrate another selective fluid barrier valve device **1110**. Selective fluid barrier valve device **1110** is similar to the selective fluid barrier valve device **10** illustrated in FIGS. **1**, **2**, **3**, **4**, **5**, **6**, **7**, **8**A, **8**B, **8**C, **9**A, **9**B, **9**C, **10**A, **10**B, and **10**C and described above, except as detailed below. With respect to selective fluid barrier valve device **1110**, reference numbers in FIGS. **24**, **25**, **26**, and **27** refer to the same structural element or feature referenced by the same number in FIGS. **1**, **2**, **3**, **4**, **5**, **6**, **7**, **8**A, **8**B, **8**C, **9**A, **9**B, **9**C, **10**A, **10**B, and **10**C, offset by **1100**.

In the illustrated embodiment, the selective fluid barrier valve device **1110** comprises a housing **1116**, a first actuator **1118**, a sleeve **1120**, a first wire member **1122**, a second wire member **1124**, a third wire member **1126**, a connector **1128**, and a second actuator **1260**.

In the illustrated embodiment, the body **1174** of the first actuator **1118** defines a second plurality of recesses **1262** that extend about the circumference of the outer surface **1196** of the first actuator **1118** and a protuberance **1263**. Each recess of the second plurality of recesses **1262** is disposed between the protuberance **1263** and the proximal end **1170** of the first actuator **1118**. Each recess of the second plurality of recesses **1262** is cooperatively defined by a first wall **1264**, a second wall **1266**, and a base **1268**. Each of the first wall **1264** and the second wall **1266** extends from the outer surface **1196** and toward the inner surface **1198** to the base **1268**. The first wall **1264** is disposed at a first angle **1265** relative to a first portion of the base **1268**. The second wall **1266** is disposed at a second angle **1267** relative to a second portion of the base **1268**. The first angle **1265** is less than the second angle **1267**. In the illustrated embodiment, the first angle **1265** is equal to 90 degrees and the second angle **1267** is greater than 90 degrees. Each recess of the second plurality of recesses **1262** is sized and configured to receive a projection of the plurality of projections **1280** defined by the second actuator **1260**, as described below. The second plurality of recesses **1262** provide a mechanism for moving the selective fluid barrier valve device **1110** between the first configuration and the second configuration while preventing overtightening on any device or object disposed through the passageway **1216** defined by the sleeve **1120**.

The protuberance **1263** extends from the outer surface **1196** away from the passageway **1178** defined by the first actuator **1118** and around the entire circumference of the outer surface **1196** of the first actuator **1118**. However, alternative embodiments can include a protuberance that extends around a portion of the outer surface of a first actuator. The protuberance **1263** is sized and configured to be received by the groove **1278** defined by the second actuator **1260** such that when the protuberance **1263** is disposed within the groove **1278** the first actuator **1118** is moveably attached to the second actuator **1260** (e.g., a snap fit attachment between the first actuator **1118** and the second actuator **1260** is achieved).

While the first wall **1264** has been illustrated as being disposed at a first angle **1265** that is equal to 90 degrees relative to a first portion of the base **1268** and the second wall **1266** has been illustrated as being disposed at a second angle **1267** that is greater than 90 degrees relative to a second portion of the base **1268**, a first wall and/or second wall can be disposed at any suitable angle relative to a base. Example angles considered suitable to position a first wall relative to a portion of a base include angles equal to, substantially equal to, or about 90 degrees, angles that are less than 90 degrees, angles that are greater than 90 degrees, angles that are acute, angles that are obtuse, and any other angle considered suitable for a particular embodiment. Example angles considered suitable to position a second wall relative to a portion of a base include angles equal to, substantially equal to, or about 135 degrees, angles that are less than 135 degrees, angles that are greater than 135 degrees, angles that are acute, angles that are obtuse, and any other angle considered suitable for a particular embodiment. Alternatively, a second wall of a recess can be complementary to the structural arrangement of a surface of a projection defined by a second actuator.

While a second plurality of recesses **1262** has been illustrated, alternative embodiments can include one or more projections such that each projection extends from the outer surface of an actuator and away from the inner surface. Each projection of the one or more projections can be cooperatively defined by a first wall, a second wall, and a top wall and sized and configured to be received a recess defined by a second actuator Each of the first wall and the second wall extends from the outer surface and away from the inner surface to the top wall. The first wall is disposed at a first angle relative to a first portion of the top wall. The second wall is disposed at a second angle relative to a second portion of the top wall. The first angle is less than the second angle. Example angles considered suitable to position a first wall relative to a portion of a top wall of a projection include angles equal to, substantially equal to, or about 90 degrees, angles that are less than 90 degrees, angles that are greater than 90 degrees, angles that are acute, angles that are obtuse, and any other angle considered suitable for a particular embodiment. Example angles considered suitable to position a second wall relative to a portion of a top wall of a projection include angles equal to, substantially equal to, or about 135 degrees, angles that are less than 135 degrees, angles that are greater than 135 degrees, angles that are acute, angles that are obtuse, and any other angle considered suitable for a particular embodiment. Alternatively, a second wall of a projection can be complementary to the structural arrangement of a surface of a projection defined by a second actuator.

While a second plurality of recesses **1262** has been illustrated as defined on the first actuator **1218**, a selective fluid barrier valve device can include any suitable number of recesses defined at any suitable location on an actuator. Skilled artisans will be able to select a suitable number of recesses to define on an actuator and a suitable location to position each recess according to a particular embodiment based on various considerations, including the structural arrangement of an actuator of an embodiment. Example number of recesses considered suitable to include on an actuator include one, at least one, two, a plurality, three, four, five, six, seven, eight, nine, ten, eleven, twelve, and any other number considered suitable for a particular embodiment.

In the illustrated embodiment, the second actuator **1260** has a proximal end **1270**, a distal end **1272**, and a second actuator body **1274** that defines a passageway **1276**, a groove **1278**, a plurality of projections **1280**, an outer surface **1282**, and an inner surface **1284**. The second actuator **1260** is movably attached to the first actuator **1118** and is moveable in a first direction **1271** and a second direction **1273**, as shown in FIG. **26**. Movement of the second actuator **1260** in the first direction **1271** moves the first actuator **1118** from its first position to its second position and movement of the second actuator **1260** in the second direction **1273** moves the first actuator **1118** from its second position to its first position.

In the illustrated embodiment, the second actuator **1260** is a rotatable member **1261** that can be rotated on the first actuator **1118** around the lengthwise axis **1111** of the selective fluid barrier valve device **1110**. However, while a rotatable member **1261** has been illustrated, a selective fluid barrier valve device can include any suitable actuator capable of moving the selective fluid barrier valve device between a first configuration and a second configuration. Skilled artisans will be able to select a suitable actuator to include on a selective fluid barrier valve device according to a particular embodiment based on various considerations, including the number of wire members included in the selective fluid barrier valve device and/or the structural arrangement of a first actuator. Example actuators considered suitable to include on a selective fluid barrier valve device include rotatable actuators, linear actuators, slidable actuators, pivotable actuators, levers, and any other actuator considered suitable for a particular embodiment.

The passageway **1276** extends from an opening defined at the proximal end **1270** to an opening defined at the distal end **1272**. The groove **1278** is defined on the inner surface **1284** of the second actuator **1260** between the distal end **1272** and the plurality of projections **1280**. The groove **1278** extends into the second actuator housing **1274** from the inner surface **1284**, away from the lengthwise axis **1111** of the selective fluid barrier valve device **1110**, and around the entire circumference of the inner surface **1284** of the second actuator **1260**. However, alternative embodiments can include a groove that extends about a portion of the circumference of the inner surface of an actuator. The groove **1278** is sized and configured to receive a portion of the first actuator **1118** (e.g., protuberance **1263**). The distal end **1272** of the second actuator **1260** is sized and configured to be advanced distally over the protuberance **1263** defined by the first actuator **1118** such that the protuberance **1263** can be disposed within the groove **1278**. The groove **1278** and the protuberance **1263** cooperatively provide a mechanism for moveably attaching the first actuator **1118** to the second actuator **1260** (e.g., snap fit configuration).

Each projection of the plurality of projections **1280** extends from the inner surface **1284** of the second actuator **1260**, away from the outer surface **1282** of the second actuator **1260**, and toward an axis that is offset from the lengthwise axis **1111** of the selective fluid barrier valve device **1110**. In the illustrated embodiment, each projection of the plurality of projections **1280** has a surface **1286** that is curved. When the first actuator **1118** is assembled within the second actuator **1260**, each projection of the plurality of projections **1280** extends from the inner surface **1284** of the second actuator **1260** and toward the first wall **1264** of a recess of the second plurality of recesses **1262**.

Each projection of the plurality of projections **1280** is moveable between a first configuration, as shown in FIGS. **25** and **26**, and a second configuration, as shown in FIG. **27**, such that each projection is capable of deflecting as the second actuator **1260** is moved relative to the first actuator **1118**. Each projection of the plurality of projections **1280** is biased to the first configuration and can be moved between its first configuration and second configuration in any suitable manner and using any suitable process and/or technique, such as by applying a first force on the surface **1286** of each projection of the plurality of projections **1280** directed toward the inner wall **1284**. Movement of the first actuator **1118** from the first position to the second position can be accomplished in any suitable manner and using any suitable process and/or technique, such as by applying a rotational force to the second actuator **1260** in the first direction **1271** such that each projection of the plurality of projections **1280** applies a second force on the first actuator **1118** directed toward the second wall **1266**. The second force required to move the first actuator **1118** to the second position is less than the first force required to deflect each projection of the plurality of projections **1280**. Therefore, as the second actuator **1260** is moved in the first direction **1271**, each projection of the plurality of projections **1280** advances along a base **1268** of a recess of the second plurality of recesses **1262** until it surface **1286** contacts the second wall **1266** of the recess and results in movement of the first actuator **1118**. When the second actuator **1260** is moved in the first direction **1271** the first actuator **1118** moves from its first position to its second position such that the wire members **1122**, **1124**, **1126** interact with the sleeve **1120** and move the sleeve **1120** to its second configuration.

Movement of the first actuator **1118** from the second position to a third position (e.g., a position beyond that of the second position and in the first direction **1271**, a position in which a device or component disposed within the passageway **1216** defined sleeve **1120** becomes damaged or overtightened by the sleeve **1120**) can be accomplished in any suitable manner and using any suitable process and/or technique, such as by applying a rotational force to the second actuator **1260** in the first direction **1271** such that each projection of the plurality of projections **1280** applies a third force on the first actuator **1118** directed toward the second wall **1264**. The third force required to move the first actuator **1118** to the third position is greater than the first force required to deflect each projection of the plurality of projections **1280**. Therefore, when the first actuator **1118** is in the second position, as the second actuator **1260** is moved in the first direction **1271**, each projection of the plurality of projections **1280** deflects to its second configuration such that the second actuator **1260** rotates relative to the first actuator **1118** and prevents the first actuator **1118** from moving to its third position. This arrangement prevents

overtightening or damage to any device or component disposed through the passageway **1216** defined by the sleeve **1120**.

Movement of the first actuator **1118** from the second position to the first position can be accomplished in any suitable manner and using any suitable process and/or technique, such as by applying a rotational force to the second actuator **1260** in the second direction **1273** such that each projection of the plurality of projections **1280** applies a fourth force on the first actuator **1118** directed toward the first wall **1264**. Due to the structural configuration of the first wall **1264** relative to each projection of the plurality of projections **1280**, the fourth force need only be greater than the force required to move each of the ribs **1184**, **1186**, **1188** from its respective recess of the plurality of recesses **1152** to another, different, recess of the plurality of recesses **1152**. As the second actuator **1260** is moved in the second direction **1271**, each projection of the plurality of projections **1280** advances along a base **1268** of a recess of the second plurality of recesses **1262** until it contacts the first wall **1264** of the recess and results in movement of the first actuator **1118**. When the second actuator **1260** is moved in the second direction **1273** the first actuator **1118** moves from its second position to its first position such that the wire members **1122**, **1124**, **1126** interact with the sleeve **1120** and move the sleeve **1120** to its first configuration.

While a plurality of projections **1280** has been illustrated, a selective fluid barrier valve device can include any suitable number of projections defined at any suitable location on an actuator. Skilled artisans will be able to select a suitable number of projections to define on an actuator and a suitable location to position each projection according to a particular embodiment based on various considerations, including the structural arrangement of a first actuator of an embodiment. Example number of projections considered suitable to include on an actuator include one, at least one, two, a plurality, three, four, five, six, and any other number considered suitable for a particular embodiment.

While each projection of the plurality of projections **1280** has been illustrated as having a curved surface **1286**, a projection defined by an actuator can have any suitable structural arrangement. Example structural arrangements considered suitable for a surface of a projection defined by an actuator and directed toward a second wall of a recess or projection defined by another actuator include surfaces that are curved, planar, multifaceted, and any other structural arrangement considered suitable for a particular embodiment.

While the first actuator **1118** and the second actuator **1260** have been illustrated as having particular structural arrangements, an actuator can have any suitable structural arrangement and can be based on various considerations, including the number of recesses and/or projections defined by an actuator included in a selective fluid barrier valve device. For example, while a protuberance has been illustrated as being defined by a first actuator and a groove has been illustrated as being defined by a second actuator, a first actuator can define a groove and a second actuator can define a protuberance. In addition, while the plurality of projections **1280** have been illustrated as extending away from the outer surface **1282** of the second actuator **1260**, a plurality of projections defined by an actuator can have any suitable structural arrangement. For example, alternative embodiments can include one or more projections that have a structural arrangement similar to a rib, such as the ribs **84**, **86**, **88** illustrated with respect to FIGS. **1**, **2**, **3**, **4**, and **5**, one or more recesses that have a structural arrangement similar to a recess, such as the plurality of recesses **52** illustrated with respect to FIGS. **2**, **3**, and **6**, and/or a second actuator that defines a plurality of recesses defined along the inner surface of the second actuator (e.g., similar to the second plurality of recesses **1262**) such that each recess is sized and configured to receive a deflectable projection defined by a first actuator (e.g., similar to the plurality of projections **1280**).

Example—Analysis of Materials that can be Used to Form a Sleeve

Material of Sleeve	Empty Sleeve Passageway	0.018"Wire disposed within sleeve passageway	0.035" Wire disposed within sleeve passageway	14 French dilator disposed within sleeve passageway	Rating:
80% - 4755 20% - 4765	3 g	5.4 g	50 g	4.9 g	+
100% - 4755	14.3 g	2.8 g	25.4 g	11 g	+
90% - 4755 10% - 4014	0	0	1.4 g	0	++
80% - 4755 20% - 4014	0	0	0	0	++++
70% - 4755 30% - 4014	0	0	0	0	++++
60% - 4755 40% - 4014	0	0	Trace	0	+++

Discussion

A quantitative analysis was performed on six (6) sleeves. The materials used to form the sleeves that were analyzed were off the shelf NuSil MED-4755, NuSil MED-4765, and NuSil MED-4014 in the proportions indicated in the table. Each sleeve was included in a selective fluid barrier valve device that was constructed to be similar to the embodiment illustrated in FIGS. **1**, **2**, **3**, **4**, **5**, **6**, **7**, **8**A, **8**B, **8**C, **9**A, **9**B, **9**C, **10**A, **10**B, and **10**C. The selective fluid barrier valve device was attached to a gravity flow rig and pressurized for 30 seconds per test at a pressure of 2.9 PSI+/−0.1 PSI (e.g., systolic pressure). Each sleeve was tested in the second configuration with no device disposed through the sleeve passageway and with the devices described in the table disposed through the sleeve passageway.

Results

Each of the sleeves tested was assigned a subjective qualitative rating between + and ++++ based on the performance of the sleeve during the analysis. Two out of the six (2/6) sleeves tested resulted in no leaks being detected in each test. Each of these sleeves was assigned a subjective qualitative rating of ++++. One out of the six (1/6) sleeves

tested resulted in a trace leak being detected when a 0.035" wire was disposed within the sleeve passageway. This sleeve was assigned a subjective qualitative rating of +++. One out of the six (1/6) sleeves tested resulted in a leak being detected when a 0.035" wire was disposed in the sleeve passageway. This sleeve was assigned a subjective qualitative rating of ++. Two out of the six (2/6) sleeves tested resulted in leaks being detected in each test. Each of these sleeves was assigned a subjective qualitative rating of +.

As illustrated by the table, a sleeve formed of between about 70% and 80% of NuSil MED-4755 and between about 20% and 30% of NuSil MED-4014 is considered suitable for inclusion in a selective fluid barrier valve device. For example, a sleeve formed of about 80% of NuSil MED-4755 and about 20% of NuSil MED-4014 is considered suitable for inclusion in a selective fluid barrier valve device. Alternatively, a sleeve formed of about 70% of NuSil MED-4755 and about 30% of NuSil MED-4014 is considered suitable for inclusion in a selective fluid barrier valve device.

Those with ordinary skill in the art will appreciate that various modifications and alternatives for the described and illustrated embodiments can be developed in light of the overall teachings of the disclosure. Accordingly, the particular arrangements disclosed are intended to be illustrative only and not limiting as to the scope of the invention, which is to be given the full breadth of the appended claims and any and all equivalents thereof.

What is claimed is:

1. A selective fluid barrier valve device having a lengthwise axis and comprising:

a housing having a housing proximal end, a housing distal end, and a housing body defining a housing passageway and a first opening, the housing passageway extending through the housing, the first opening extending through the housing body and providing access to the housing passageway;

an actuator moveably attached to the housing and moveable between a first position and a second position;

a sleeve disposed within the housing passageway and having a sleeve proximal end, a sleeve distal end, and a sleeve body defining a sleeve passageway extending through the sleeve, the sleeve moveable between a first configuration in which the sleeve passageway is open such that fluid can pass through the sleeve passageway and a second configuration in which the sleeve passageway is closed preventing fluid from passing through the sleeve passageway; and

a first wire member having a first wire member first end attached to the housing and a first wire member second end attached to the actuator, the first wire member extending between the housing and the sleeve and through the first opening defined by the housing;

wherein the sleeve is in the first configuration and the sleeve proximal end is disposed a first distance from the housing proximal end when the actuator is in the first position;

wherein the sleeve is in the second configuration and the sleeve proximal end is disposed a second distance from the housing proximal end when the actuator is in the second position;

wherein the second distance is different than the first distance;

wherein the actuator has an actuator outer surface and an actuator inner surface;

wherein the actuator body defines an actuator cavity extending from the actuator inner surface toward the actuator outer surface, the actuator cavity having a lengthwise axis that is parallel to said lengthwise axis of said selective fluid barrier valve device; and

wherein the first wire member second end is disposed within the actuator cavity.

2. A selective fluid barrier valve device having a lengthwise axis and comprising:

a housing having a housing proximal end, a housing distal end, and a housing body defining a housing passageway and a first opening, the housing passageway extending through the housing, the first opening extending through the housing body and providing access to the housing passageway;

an actuator moveably attached to the housing and moveable between a first position and a second position;

a sleeve disposed within the housing passageway and having a sleeve proximal end, a sleeve distal end, and a sleeve body defining a sleeve passageway extending through the sleeve, the sleeve moveable between a first configuration in which the sleeve passageway is open such that fluid can pass through the sleeve passageway and a second configuration in which the sleeve passageway is closed preventing fluid from passing through the sleeve passageway; and

a first wire member having a first wire member first end attached to the housing and a first wire member second end attached to the actuator, the first wire member extending between the housing and the sleeve and through the first opening defined by the housing;

wherein the sleeve is in the first configuration and the sleeve proximal end is disposed a first distance from the housing proximal end when the actuator is in the first position;

wherein the sleeve is in the second configuration and the sleeve proximal end is disposed a second distance from the housing proximal end when the actuator is in the second position;

wherein the second distance is different than the first distance;

wherein the housing body defines a plurality of grooves within the housing passageway;

wherein the sleeve has a sleeve outer surface and a sleeve inner surface, the sleeve body defining a plurality of protuberances extending from the sleeve outer surface and away from the sleeve inner surface;

wherein each protuberance of the plurality of protuberances defined by the sleeve body is sized and configured to be received by a groove of the plurality of grooves defined by the housing body; and

wherein at least one of the protuberances of the plurality of protuberances defined by the sleeve body is disposed within a groove of the plurality of grooves defined by the housing body.

3. A selective fluid barrier valve device having a lengthwise axis and comprising:

a housing having a housing proximal end, a housing distal end, and a housing body defining a housing passageway, a first opening, a second opening, and a third opening, the housing passageway extending through the housing, each of the first opening, the second opening, and the third opening extending through the housing body and providing access to the housing passageway;

an actuator moveably attached to the housing and moveable between a first position and a second position;

a sleeve disposed within the housing passageway and having a sleeve proximal end, a sleeve distal end, and a sleeve body defining a sleeve passageway extending

through the sleeve, the sleeve moveable between a first configuration in which the sleeve passageway is open such that fluid can pass through the sleeve passageway and a second configuration in which the sleeve passageway is closed preventing fluid from passing through the sleeve passageway;

a first wire member having a first wire member first end attached to the housing and a first wire member second end attached to the actuator, the first wire member extending between the housing and the sleeve and through the first opening defined by the housing;

a second wire member having a second wire member first end attached to the housing and a second wire member second end attached to the actuator, the second wire member extending between the housing and the sleeve and through the second opening defined by the housing; and

a third wire member having a third wire member first end attached to the housing and a third wire member second end attached to the actuator, the third wire member extending between the housing and the sleeve and through the third opening defined by the housing;

wherein the sleeve is in the first configuration and the sleeve proximal end is disposed a first distance from the housing proximal end when the actuator is in the first position;

wherein the sleeve is in the second configuration and the sleeve proximal end is disposed a second distance from the housing proximal end when the actuator is in the second position;

wherein the second distance is greater than the first distance;

wherein the actuator has an actuator outer surface and an actuator inner surface;

wherein the actuator body defines an actuator cavity extending from the actuator inner surface toward the actuator outer surface, the actuator cavity having a lengthwise axis that is parallel to said lengthwise axis of said selective fluid barrier valve device; and

wherein the first wire member second end is disposed within the actuator cavity.

4. A selective fluid barrier valve device having a lengthwise axis and comprising:

a housing having a housing proximal end, a housing distal end, and a housing body defining a housing passageway, a first opening, a second opening, and a third opening, the housing passageway extending through the housing, each of the first opening, the second opening, and the third opening extending through the housing body and providing access to the housing passageway;

an actuator moveably attached to the housing and moveable between a first position and a second position;

a sleeve disposed within the housing passageway and having a sleeve proximal end, a sleeve distal end, and a sleeve body defining a sleeve passageway extending through the sleeve, the sleeve moveable between a first configuration in which the sleeve passageway is open such that fluid can pass through the sleeve passageway and a second configuration in which the sleeve passageway is closed preventing fluid from passing through the sleeve passageway;

a first wire member having a first wire member first end attached to the housing and a first wire member second end attached to the actuator, the first wire member extending between the housing and the sleeve and through the first opening defined by the housing;

a second wire member having a second wire member first end attached to the housing and a second wire member second end attached to the actuator, the second wire member extending between the housing and the sleeve and through the second opening defined by the housing; and

a third wire member having a third wire member first end attached to the housing and a third wire member second end attached to the actuator, the third wire member extending between the housing and the sleeve and through the third opening defined by the housing;

wherein the sleeve is in the first configuration and the sleeve proximal end is disposed a first distance from the housing proximal end when the actuator is in the first position;

wherein the sleeve is in the second configuration and the sleeve proximal end is disposed a second distance from the housing proximal end when the actuator is in the second position;

wherein the second distance is greater than the first distance;

wherein the housing body defines a plurality of grooves within the housing passageway;

wherein the sleeve has a sleeve outer surface and a sleeve inner surface, the sleeve body defining a plurality of protuberances extending from the sleeve outer surface and away from the sleeve inner surface;

wherein each protuberance of the plurality of protuberances defined by the sleeve body is sized and configured to be received by a groove of the plurality of grooves defined by the housing body; and

wherein at least one of the protuberances of the plurality of protuberances defined by the sleeve body is disposed within a groove of the plurality of grooves defined by the housing body.

* * * * *