UNITED STATES PATENT AND TRADEMARK OFFICE

BEFORE THE PATENT TRIAL AND APPEAL BOARD

IMPERATIVE CARE, INC.,
Petitioner,

v.

INARI MEDICAL, INC.,
Patent Owner.

Case No. IPR2025-00156
U.S. Patent No. 11,697,012

SUPPLEMENTAL DECLARATION OF PAUL J. ZALESKY

TABLE OF CONTENTS

I. INTRODUCTION 1

II. BACKGROUND AND QUALIFICATIONS 3

III. BASES OF MY OPINION 9

A. Materials Considered 9

B. Relevant Legal Principles 9

IV. SUMMARY OF OPINIONS 12

V. THE ’012 PATENT 12

A. Overview 12

B. Prosecution History of Claim 1 26

C. Cited References 27

1. Schaffer 27

2. Hartley 32

3. Eller 33

4. Garrison 34

D. Construction of Claim 1 34

1. “Filament” 35

2. “Aspiration” in the Preamble 41

E. Person of Ordinary Skill in the Art 41

VI. GROUND 1—SCHAFFER ALONE DOES NOT ANTICIPATE INDEPENDENT CLAIM 1 42

A. Schaffer does not disclose the “first filament” of Claim 1. 43

B. Schaffer does not disclose the “first filament formed into a loop around the collapsible tubular sidewall” of Claim 1 48

C. Schaffer does not disclose the "diameter of the valve lumen decreases in response to reducing a diameter of the loop" of Claim 1. 53

VII. GROUND 2—SCHAFFER DOES NOT RENDER OBVIOUS INDEPENDENT CLAIM 1.....54

VIII. GROUNDS 3 AND 4—THE COMBINATIONS OF SCHAFFER AND HARTLEY OR ELLER DO NOT RENDER CLAIM 1 OBVIOUS.....56

A. Petitioner's Stated Motivations to Modify Schaffer in View of Hartley or Eller Are Based on an Incorrect Understanding of the Sealing Mechanism of Schaffer Which Is Designed to Eliminate Gaps With or Without Instruments Inserted Through the Valve.....57

B. Petitioner and Its Expert Assert that Schaffer's Valve Forms a Complete Seal and Prevents Leaks, Even When Instruments are Inserted Therethrough. 72

C. Petitioner's Proposed Substitution of Hartley's String or Eller's Wire Member for Schaffer's U-Shaped Actuating Members is Not a Simple Substitution of One Known Element for Another. 81

D. Modifying or Substituting Hartley's String or Eller's Wire Member for Schaffer's U-Shaped Actuating Members Would Render Schaffer's Valve Inoperable for Its Intended Purposes of Durability and Easy Manufacturing.....92

E. Modifying or Substituting Hartley's String or Eller's Wire Member for Schaffer's U-Shaped Actuating Members Would Change the Principle of Operation of Schaffer's Valve in Which the U-Shaped Actuating Members Forcibly Disengage the Seal Module and Likely Render Schaffer's Valve Inoperable.....99

F. Even Assuming Petitioner's Stated Motivations to Form a Better Seal and Avoid the Formation of Gaps, Petitioner Does Not Explain Why a POSITA Would Have been Motivated to Substitute Hartley's String for Schaffer's U-Shaped Members as Opposed to Any of the Alternatives It Provides.....102

G. Altogether a POSITA Would Not Have Been Motivated to Substitute Hartley's String for Schaffer's U-Shaped Members.....105

IX. GROUNDS 5-7—THE COMBINATIONS OF SCHAFFER AND GARRISON OR SCHAFFER, GARRISON, AND HARTLEY OR ELLER DO NOT RENDER CLAIM 1 OBVIOUS.....108

X. SECONDARY CONSIDERATIONS.....108

XI. CONCLUSION.....109

I, **Paul J. Zalesky,** declare as follows:

I. INTRODUCTION

1. I have been retained by counsel for Patent Owner Inari Medical, Inc., ("Patent Owner" or "Inari") as an independent expert consultant in this proceeding in connection with *inter partes* review (IPR) proceeding IPR 2025-00156 concerning U.S. Patent 11,697,012 ("'012 Patent"; EX1001), pending before the U.S. Patent and Trademark Office, Patent Trial and Appeal Board ("Board").

2. I understand that Imperative Care, Inc. ("Petitioner" or "Imperative") has filed a petition of *inter partes* review before the Board asserting:

   Ground 1: the Claims (1-9) of the '012 Patent are unpatentable under 35 U.S.C. § 102 as anticipated by U.S. Patent Application Publication No. 2003/0225379 to Schaffer et al. ("Schaffer");

   Ground 2: the Claims of the '012 Patent are unpatentable under 35 U.S.C. § 103 as obvious over Schaffer alone;

   Ground 3: the Claims of the '012 Patent are unpatentable under 35 U.S.C. § 103 as obvious over Schaffer in combination with U.S. Patent Application Publication No. 2003/0116731 to Hartley ("Hartley");

   Ground 4: the Claims of the '012 Patent are unpatentable under 35 U.S.C. § 103 as obvious over Schaffer in combination with U.S. Patent No. 9,980,813 to Eller ("Eller");

Ground 5: the Claims of the ’012 Patent are unpatentable under 35 U.S.C. § 103 as obvious over Schaffer in combination with Garrison;

Ground 6: the Claims of the ’012 Patent are unpatentable under 35 U.S.C. § 103 as obvious over Schaffer in combination with Hartley and Garrison; and

Ground 7: the Claims of the ’012 Patent are unpatentable under 35 U.S.C. § 103 as obvious over Schaffer in combination with Eller and Garrison.

3. I have been asked by counsel for Inari Medical, Inc. (“Inari” or “Patent Owner”) to opine on the patentability of the claims of the ’012 patent and, in particular, the patentability of independent Claim 1 with respect to grounds 1-7.

4. Along with my years of education, research, and experience, my opinions are based on investigation and study of relevant materials. The materials that I evaluated in support of this Declaration include all exhibits cited in this Declaration and in the Petition.

5. I may rely upon these materials, my knowledge and experience, and/or additional materials to rebut arguments raised by Petitioner. Further, I may also consider additional documents and information in forming any necessary opinions, including documents that may not yet have been provided to me.

6. My analysis of the materials produced in this matter is ongoing, and I will continue to review any new material as it is provided. This Declaration represents only those opinions I have formed to date. I reserve the right to revise, supplement, and/or amend my opinions stated herein based on new information and on my continuing analysis of the materials already provided.

7. My work in this case is being billed at my normal hourly consulting rate, with reimbursement for actual expenses. My compensation is not related to the outcome of this proceeding. I have no personal interest in the outcome of the case.

II. BACKGROUND AND QUALIFICATIONS

8. My qualifications for forming the opinions set forth in this Declaration are summarized here and explained in more detail in my attached curriculum vitae.

9. I received my Ph.D. in Biomedical Engineering from the University of Michigan. My doctoral research focused on the prediction of optimal surgical timing for the repair of congenital heart defects. I received an undergraduate degree in Aerospace Engineering from the University of Notre Dame. I also received a Master of Science in Aerospace Engineering from the University of Michigan.

10. My industrial career has been focused on the development and commercialization of specialty medical devices for the diagnosis and treatment of heart disease, encompassing more than 30 years of management/engineering positions in both large and small companies. As outlined below, I have been directly involved with the development and clinical use of various interventional catheters and devices, all requiring the insertion and use of a hemostatic valve to minimize or prevent back bleeding.

11. Following the initiation of "interventional" cardiology by Dr. Andreas Gruntzig in the late 1970's, when he pioneered coronary balloon angioplasty, the 1980's saw the evolution of less invasive treatments of cardiovascular disease. Today, those treatments are generally referred to as interventional cardiology or radiology. Early on, I became directly involved in the development of devices associated with interventional cardiology and related cardiovascular disciplines. Such devices range from simple, diagnostic catheters to complex electromechanical systems used for cardiovascular disease and associated issues, including thrombosis. In 1986, I led Boston Scientific's entry into the coronary angioplasty (PTCA) market as the Director of R&D, presenting device efficacy data to the FDA Panel towards a soon-approved Pre-Market Application (PMA). In that role I also supervised the development of guide

catheters and guidewires needed as accessories to the diagnosis and treatment of cardiovascular disorders.

12. In 1986, I co-founded InterTherapy with cardiologist Dr. Walt Henry. InterTherapy was focused on the development of intravascular ultrasound for assessment of coronary and peripheral vascular disease that directed subsequent therapy. The disposable component of the product was a 5 French catheter with design and materials that enabled its passage through standard guide catheters into the branches of the coronary artery or peripheral arteries. From 1986 through 1990 I managed all company operations, with emphasis on device use in the cardiac catheterization and special procedure labs of center-of-excellence hospitals.

13. I recruited, and worked closely with, Dr. Martin Leon, then a Fellow at the National Institutes of Health, and collaborated with Dr. Leon on the creation of a new, interventional cardiology symposium, Transcatheter Cardiovascular Therapeutics, which subsequently evolved into the largest and most comprehensive symposium in the field of interventional cardiology. I also collaborated closely with cardiologists, vascular and cardiac surgeons, and interventional radiologists from multiple U.S. and European Centers of Excellence, including the Mayo Clinic, Mass General Hospital, UCLA, Rhode Island Hospital, Emory University, Stanford University, Clinico Cardiologica in Milan,

Italy, and many others. In this, and subsequent professional positions, I participated in hundreds of patient cases in the cardiac catheterization lab and operating room, donning protective lead aprons and masks while assisting or observing patient cases. The InterTherapy technology effectively enabled the development and evolution of coronary and peripheral vascular stents, as the real time, intravascular imaging enabled review and optimization of treatment with specialized catheters or stents.

14. In the early 1990's I served as a VP R&D for a division of Baxter International, where I led the development of and presented the corporation's interventional cardiology and cardiopulmonary bypass product portfolio to cardiologists and surgeons and associated symposia, including the development of critical devices for treatment of cardiovascular disease.

15. In 1995 I co-founded, with cardiologist Dr. J. Richard Spears, TherOx. TherOx was focused on the development of oxygen supersaturated solutions to the coronary artery, following acute myocardial infarction (heart attack). The primary product included a sub-selective catheter that could access distal segments of the coronary branches, for fluid delivery. By sub-selective, I mean a catheter that can be placed into and advanced through a larger catheter, sometimes referred to as a "mother-and-child" catheter configuration.

16. In the 1995-2005 time period, myriad guide catheter configurations were developed and tested by many different companies, including multi-hardness bodies, multi-flexibility properties, various tip geometries and materials, and various lumen geometries. Simultaneously, variations on angioplasty, thrombectomy, atherectomy, and other devices were developed and tested, including catheters with active energy capability for lesion (disease) ablation or removal, miniature balloons on wires, and selective pharmacologic infusions. I was directly involved with physician use and assessment of these and related devices while directing and participating in formal clinical studies in the U.S., Europe, Canada, and Israel.

17. During my time with Volcano Corporation (now Philips) I supervised coronary and peripheral artery catheter development, manufacture, and clinical use.

18. Since 2013, I have focused on consulting and have provided expert advice or opinion on numerous projects, including such areas as algorithms for cardiac arrhythmia diagnosis, implantable cardiac defibrillators, blood oxygen diagnostic devices, and cardiovascular devices and processes associated with vascular disease or obstruction treatment. For 1½ years, I served as interim CEO for Keystone Medical, an Israel-based start-up for the development of cerebral protection devices for use with transcatheter heart valve replacement. Our

product development activities included cardiac delivery catheters, guide-wires, and associated catheterization lab procedures for device insertion, deployment, use, and removal.

19. In many of my management positions, I was responsible for development and maintenance of intellectual property, including both direct management of in-house patent counsel and collaboration with outside patent counsel. I am a named co-inventor on more than 20 issued U.S. patents, almost all focused on cardiovascular, coronary artery devices.

20. I have devoted most of my 35 plus years in product development to diagnosis and treatment of cardiovascular disease. Multiple experiences provided me with keen insights into the various aspects of heart disease, the optimized use of least invasive therapies, and the underlying pathophysiology of cardiovascular disease. I observed or participated in several hundred patient cases in the special procedure labs across the U.S. and Europe. I co-pioneered Intravascular Ultrasound, utilized to characterize vascular disease, guide treatment, and confirm therapeutic efficacy via complete stent deployment or other treatment at the lesion site. I co-pioneered the use of Aqueous Oxygen in patients with acute myocardial infarctions (heart attacks), providing resuscitation of ischemic, stunned or damaged cardiac muscle. Both of these technologies are

currently part of the interventional cardiologist armamentarium for heart disease diagnosis and treatment.

III. BASES OF MY OPINION

A. Materials Considered

21. The opinions included in this Declaration are based on the documents I reviewed, my professional judgment, and my education and experience.

22. In forming my opinion expressed in this Declaration, I reviewed all the materials listed in the attachment hereto, and any other material I refer to in this Declaration in support of my opinion.

B. Relevant Legal Principles

23. I am not an attorney, but in preparing and forming my opinions, I have been informed of certain legal principles. I have applied my understanding of those principles and taken them into account when forming the opinions I describe. My understanding of the relevant legal principles is summarized below.

24. I understand that claim terms are generally given their ordinary and customary meaning as understood by a person of ordinary skill in the art at the time of the invention when read in the context of the specification and prosecution history unless a patentee sets out a different definition or clearly disavows claim scope.

25. I further understand that extrinsic evidence such as expert and inventor testimony, dictionaries, and learned treatises can help determine the meaning of

claim terms, although that evidence is less significant than the claims, specification, and prosecution history.

26. I have been informed that Imperative bears the burden of proving unpatentability by a preponderance of evidence. I have been told that this means that Imperative must prove that more likely than not that the claims of the ’012 patent are anticipated by Schaffer, obvious over Schaffer alone, obvious over the combination of Schaffer and Hartley, obvious over the combination of Schaffer and Eller, obvious over the combination of Schaffer and Garrison, obvious over the combination of Schaffer, Hartley, and Garrison, or obvious over the combination of Schaffer, Eller, and Garrison.

27. I understand that my opinions regarding patentability are from the viewpoint of a person having ordinary skill in the field of the technology of the patent as of the time of the invention. For the purposes of this Declaration, I have assumed that date is the earliest priority date of the ’012 Patent which is September 6, 2017. Petitioner also applies September 6, 2017, as the priority date for the ’012 Patent. Petition, p. 15.

28. I understand that for a patent claim to be anticipated, each claim limitation must be present in a single piece of prior art. It is my understanding from counsel that a prior art reference anticipates a claimed invention if the prior

art reference disclosed each of the claimed limitations of the invention either expressly or inherently.

29. I understand that if the differences between the claimed invention and the prior art are such that the claimed invention as a whole would have been obvious before the effective filing date of the claimed invention to a person having ordinary skill in the art to which the claimed invention pertains, the claimed invention is obvious.

30. I understand there are four fact-based inquiries involved in determining patent obviousness. These include: (1) the scope and content of the prior art; (2) the differences between the claimed invention and the prior art; (3) the level of ordinary skill in the art; and (4) objective indicia of non-obviousness. I have been informed that examples of objective indicia include unexpected results, commercial success of the invention, whether the invention satisfied a long felt need in the industry, failure of others to find a solution to the problem at hand, commercial acquiescence via licensing, professional approval, unexpected results, and copying and praise by infringers.

31. I understand that even if all limitations of a claimed invention are disclosed by the prior art combination, the patent challenger must demonstrate an apparent reason to combine the known elements in the fashion of the patent

claim at issue and that a person of ordinary skill in the art would have reasonable expectation of success in pursuing that combination.

32. I understand that a prior art reference teaches away from a modification of a prior art reference when a person of ordinary skill in the art would be discouraged from following the path set out in the reference, or would be led in a direction divergent from the path followed by and claimed in the patent.

IV. SUMMARY OF OPINIONS

33. For the reasons I discuss below, I believe that the asserted claims of the ’012 Patent are not anticipated by or rendered obvious by Schaffer, or rendered obvious by any combination of the prior art asserted in the Petition.

V. THE ’012 PATENT

A. Overview

34. The ’012 Patent explains that while “traditional hemostasis valves are greatly beneficial for intravascular access, they have some drawbacks. For example, some valves may not seal adequately for all interventional applications or tools, and/or the operation of some valves may be complicated for operator use.” EX1001, 1:51-55. The ’012 Patent addresses those drawbacks by providing a hemostasis valve (i.e., a valve that inhibits or prevents blood from flowing through the valve) that provides for easy one-handed operation and strong sealing around a variety of different sized instruments, both of which are particularly important for hemostasis valves for use with thrombectomy

systems, an embodiment of the ’012 patent. *Id*. at 16:7-31 (incorporating by reference, e.g., U.S. Patent Application 15/498,320, which published as US2018/0193043 (EX2004)). These features are important to treating physicians and critical to patient health. For example, without a strong and complete seal, patients will quickly lose blood through the valve endangering the patient, especially during thrombectomy procedures using large-bore catheters and vacuum aspiration.

35. Specifically, the ’012 Patent discloses that “[t]he present disclosure relates to a valve that can be used [as] a hemostasis valve.” EX1001, 5:55-56. This valve, also referred to in the ’012 Patent as a garrote valve, can seal with or without a tool extending through the valve. *Id*. at 5:56-58. I understand that the ’012 Patent used the term “garrote valve” to evoke the mechanism and action of the valve in which a filament is looped around a flexible tubular member and pulled tightly to shrink the loop to thereby collapse and seal the flexible tubular member.

36. The design and functionality of this hemostasis valve enables medical professionals to operate the valve with one hand while maintaining a robust seal to prevent blood loss during procedures. *Id*. at 5:55-67. Specifically, the design enables such ease of use while maintaining an effective and strong seal under the high-pressure differential caused by vacuum aspiration during aspiration

thrombectomy procedures. *Id*. at 2:11-13, 5:9-23, 6:2-6. This type of valve, because of its strong seal and ability to minimize patient blood loss, is particularly well-suited for medical procedures involving the use of large-bore catheters, where the risk of blood loss is generally greater and the need for a tight valve is critical.

37. When utilizing the garrote valve in a thrombectomy procedure, for example, the garrote valve can be coupled to a proximal end of a catheter and used to seal a lumen of the catheter and maintain hemostasis (i.e., inhibit or prevent blood flow from the catheter through the valve) when an instrument (e.g., catheter, wire, embolectomy system) extends through the garrote valve and the lumen of the catheter, and when no instruments extend through the garrote valve. *Id*. at 5:55-67. The garrote valve provides for convenient single-handed operation to open and close the garrote valve while also providing robust sealing with or without an instrument inserted therethrough during various catheter operations, such as vacuum aspiration of the catheter. *Id*. at 5:64-6:6.

38. In an embodiment, the ’012 Patent discloses a garrote valve 104 on a proximal end 108 of a catheter 102. *Id*. at 6:28–35. The catheter 102 can comprise an elongate flexible shaft 106 that defines a central lumen 112 and a distal end 110 of the catheter 102:

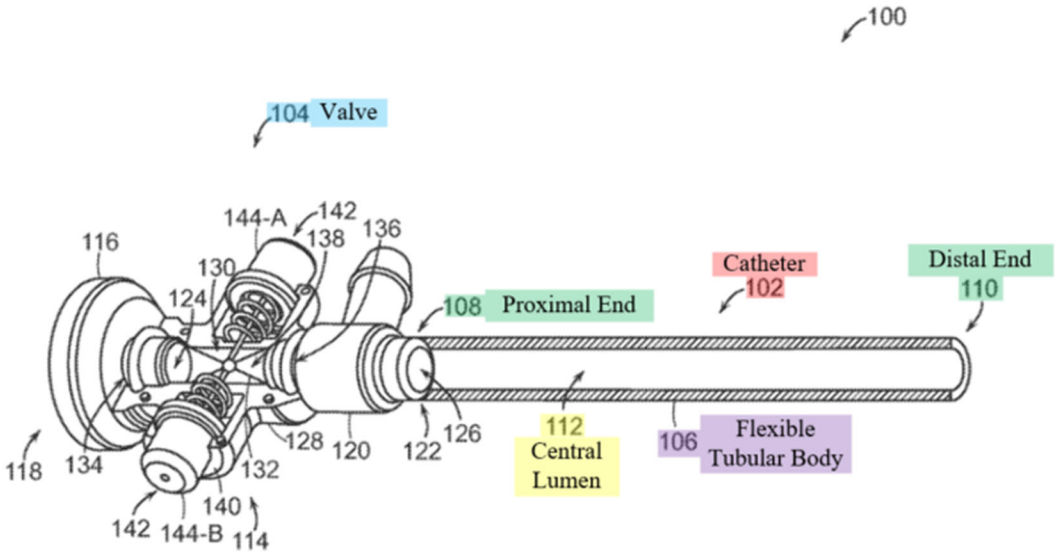

FIG. 1

Id. at 6:30-41.

39. The garrote valve 104 includes a housing defining an interior channel 130 and an elongate/tubular member 132 extending through the interior channel 130. *Id*. at 7:11-15. The tubular member 132 defines a valve lumen 138 in communication with the central lumen 112 of the catheter 102. *Id*. at 7:36-45. The tubular member 132 can comprise a compliant tubular sidewall that facilitates collapse and sealing of the tubular member 132:

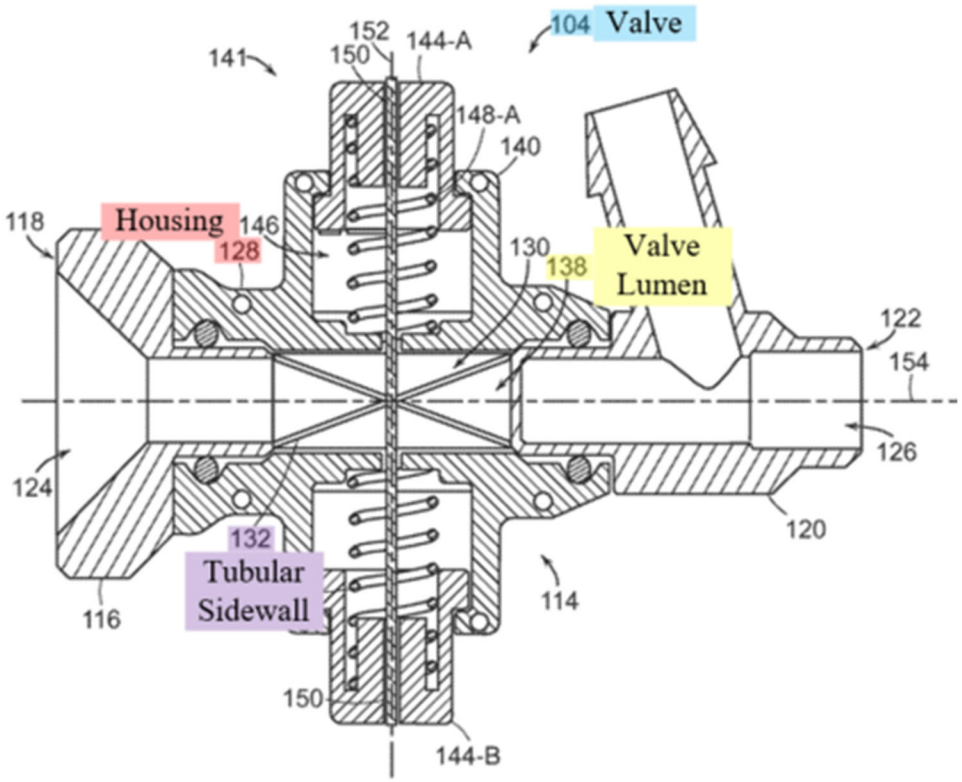

FIG. 2

Id. at 7:17-23 & 7:46-57.

40. The garrote valve further includes a constricting mechanism 141 or garrote that can collapse and seal the tubular sidewall 132 via constriction with at least one filament 150 that can extend at least partially around the tubular member 132. *Id*. at 8:5-12. Specifically, the constricting mechanism 141 can comprise an actuator 142 "which can be a manual actuator such as one or several buttons 144" (a first button 144-A and second button 144-B), and the at least one filament 150 can be coupled to the actuator 142 such that the filament 150 selectively constricts, collapses, and/or seals the tubular sidewall 132 (the

central lumen 138 of the tubular sidewall 132) based on the movement and/or position of the actuator 142:

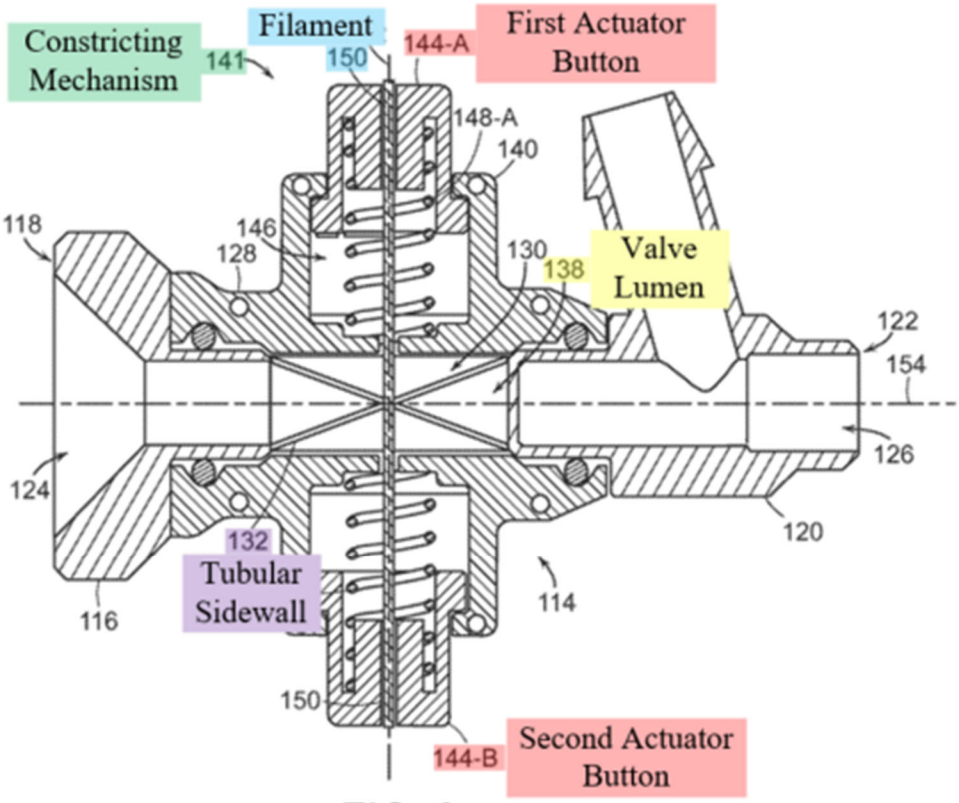

FIG. 2

Id. at 8:8-12 & 9:28-31.

41. The garrote valve also includes a first spring 148-A configured to bias the first button 144-A and a second spring 148-B configured to bias the second button 144-B to bias the actuator 142 toward a first (closed) configuration of the garrote valve shown in Figure 2 wherein the tubular sidewall 132 is "collapsed and/or sealed":

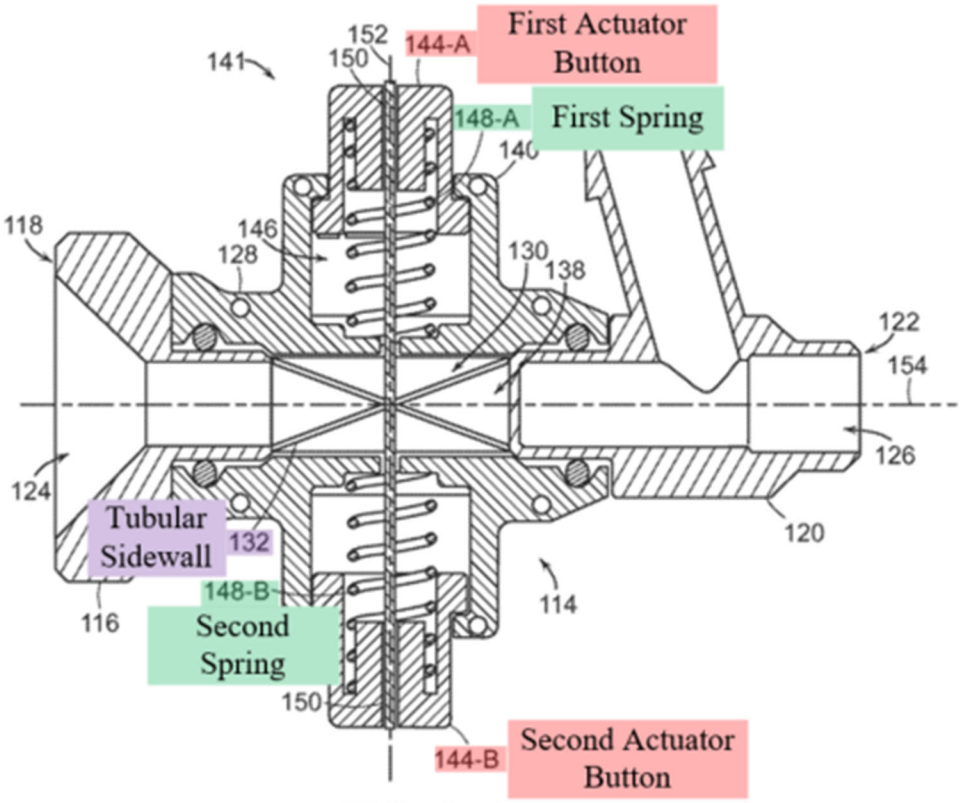

FIG. 2

Id. at 8:46-56. The actuator 142 can be actuated to move the garrote valve to a second (open) configuration of the garrote valve shown in Figure 3 wherein the tubular sidewall 132 is expanded and the central lumen 138 of the tubular sidewall 132 is unsealed:

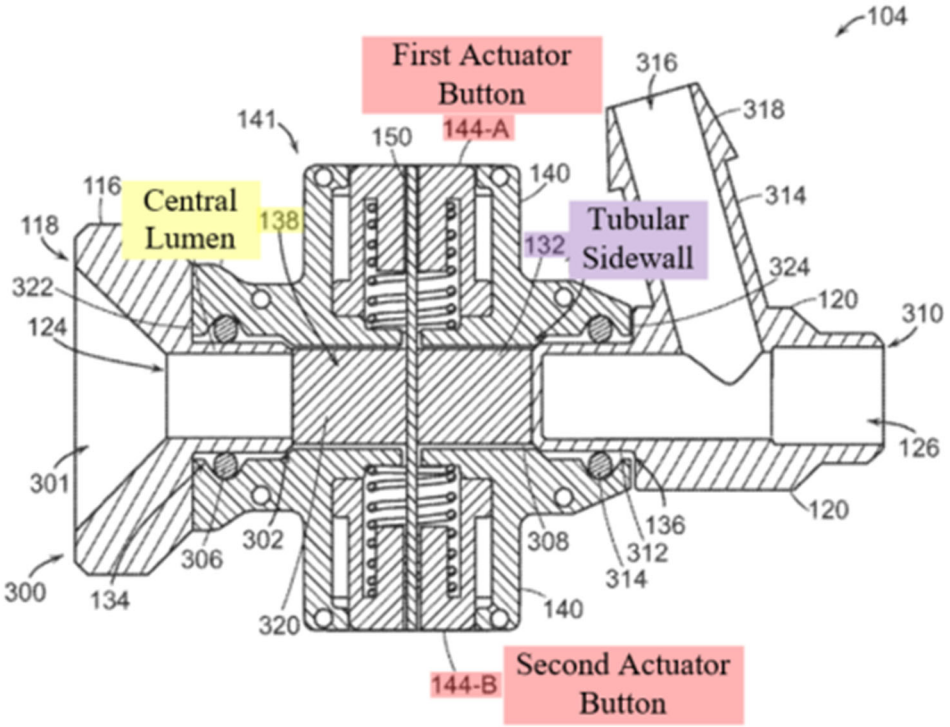

FIG. 3

Id. at 9:54-62. For example, the first and second buttons 144-A, 144-B can be depressed against the first and second springs 148-A, 148-B, respectively, in the second configuration. *Id*. In this position, the filament 150 is loosened, thereby allowing the expansion of the tubular sidewall 132 and the unsealing of the central lumen 138 thereof. *Id*. This arrangement of the constricting mechanism 141 can facilitate sealing of the garrote valve around tools or instruments of a wide range of sizes and/or diameters that fit through the elongate member 132. *Id*. at 8:12-16.

42. The filament 150 can be made from various materials, including a polymer, a synthetic, a metal, nylon, stainless steel, nitinol, silicone, or the like. *Id*. at

9:13-16. The filament 150 can comprise a single strand or a plurality of strands, and therefore can comprise one or several threads, lines, cords, rope, ribbon, flat wire, sheet, or tape. *Id*. at 9:16-23.

43. The filament 150 "can comprise a single filament 150" as shown in Figure 6. *Id*. at 12:46-48. The filament 150 can also "comprise multiple filaments" such as a first filament 150-A and a second filament 150-B as shown in Figures 7-9. *Id*. at 12:61-64.

44. The filament 150 can have different configurations as shown in Figures 6-9 of the '012 Patent. For example, as shown in Figure 6, the filament 150 can be configured to form a single loop 604 that extends around the elongate member 132:

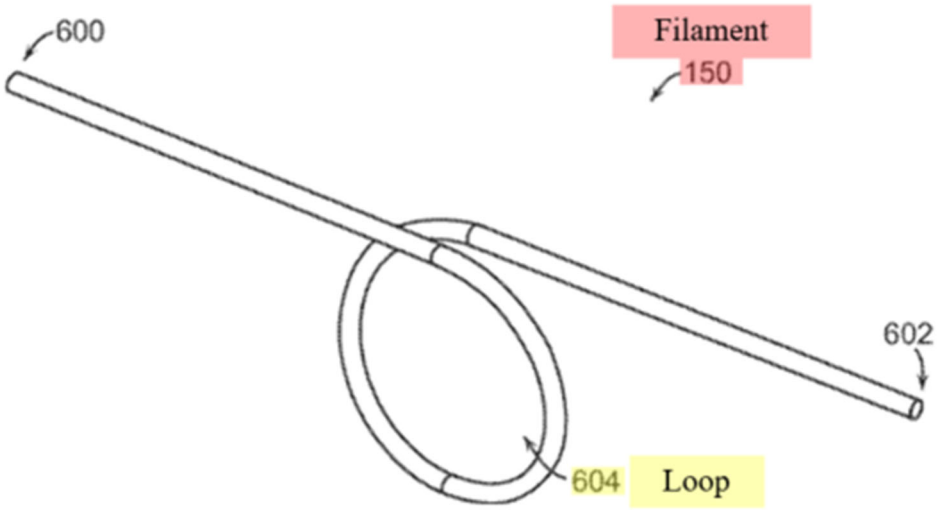

FIG. 6

Id. at 13:17-21. For example, as shown in Figure 7, the filament 150 can comprise a first filament 150-A and a second filament 150-B each of the single filaments forming an individual loop—a first loop 704 and a second loop 706, respectively:

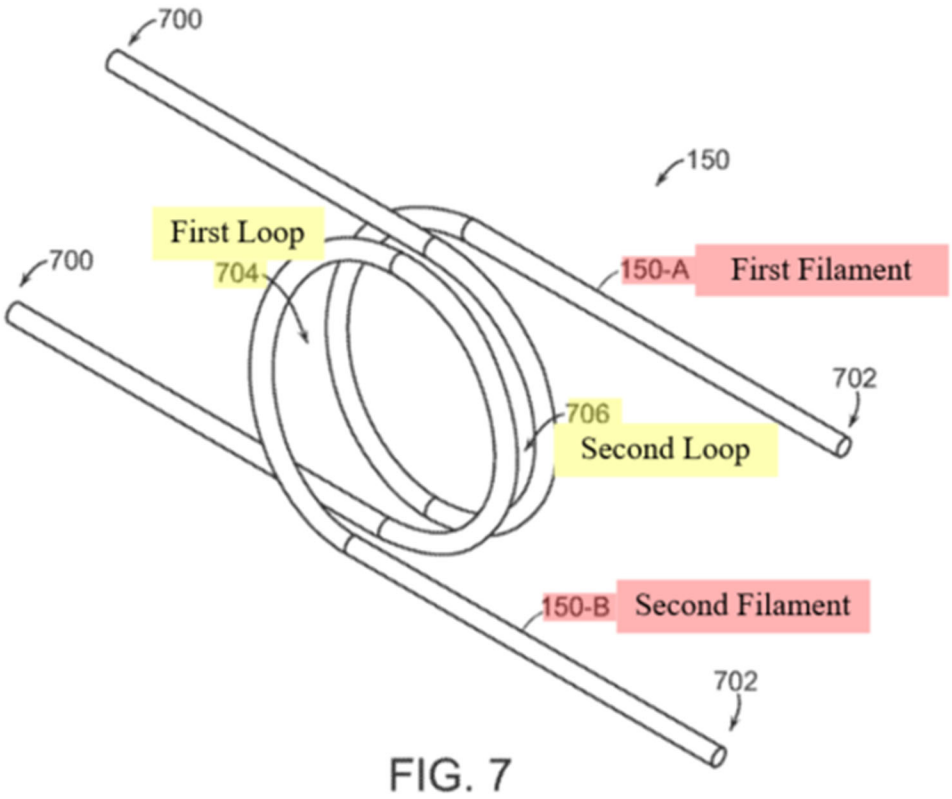

FIG. 7

Id. at 13:21-25.

45. For the filament loop embodiments shown in Figures 6 and 7, the constricting mechanism 141 acts to decrease a diameter or size of the loop 604 (Figure 6) or the first and second loops (Figure 7) when the constricting mechanism 141 is moved from the second (open) configuration to the first (closed configuration) as shown in Figures 2 and 3. *Id*. at 13:26–29.

46. As shown in Figures 8 and 9, in other non-loop embodiments of the '012 Patent the filament 150 can be formed into a single bight or multiple bights. *Id*. at 13:30-32. The '012 Patent specifies that in contrast to a loop, the term "'bight' refers to a U-shaped section between the two ends of the filament 150." *Id* at 13:32-33. Figures 8 and 9 show the first and second filaments 150-A and 150-B each forming an individual U-shaped bight—a first bight 800-A and a second bight 800-B, respectively:

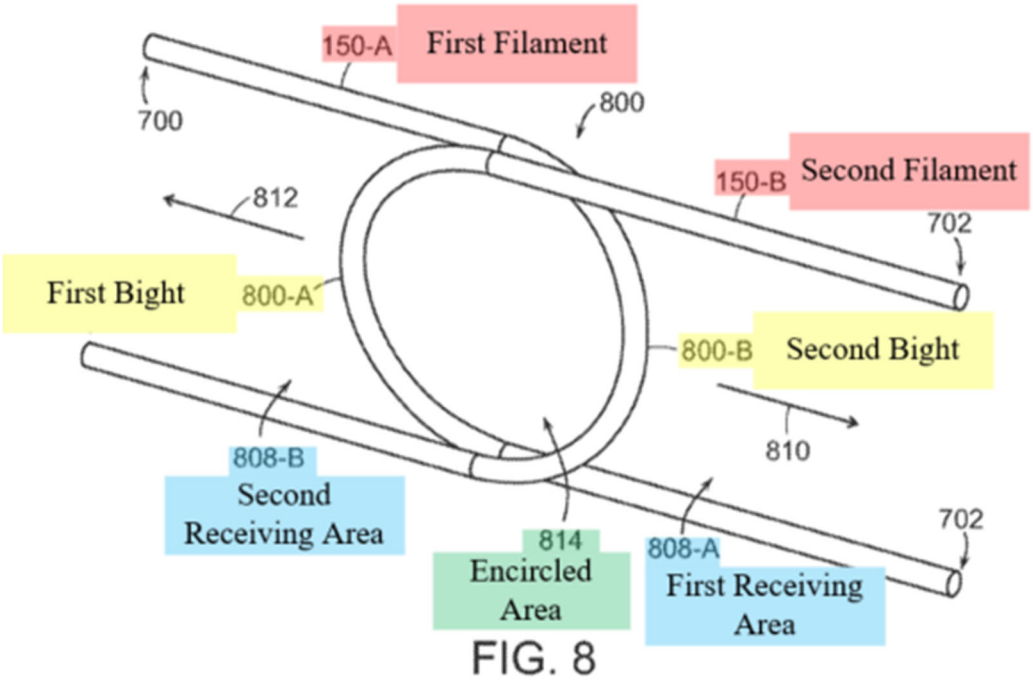

FIG. 8

Id. at 34-36.

47. As shown above, for the filament bight embodiments shown in Figures 8 and 9, the first and second bights 800-A and 800-B each define a partially enclosed receiving area 808—a first receiving area 800-A and a second receiving area

800-B, respectively, for receiving the elongate member 132. *Id*. at 47-51. As further shown above, the first and second receiving areas 808-A and 808-B overlap to define a constricting area 814. *Id*. at 13:57-61. The movement of the constricting mechanism 141 to the first (closed) configuration moves the bights 800-A, 800-B to decrease the size of the encircled area 814 and constrict, collapse, and/or seal the elongate member 132 extending through the encircled area 814, as shown in Figure 9:

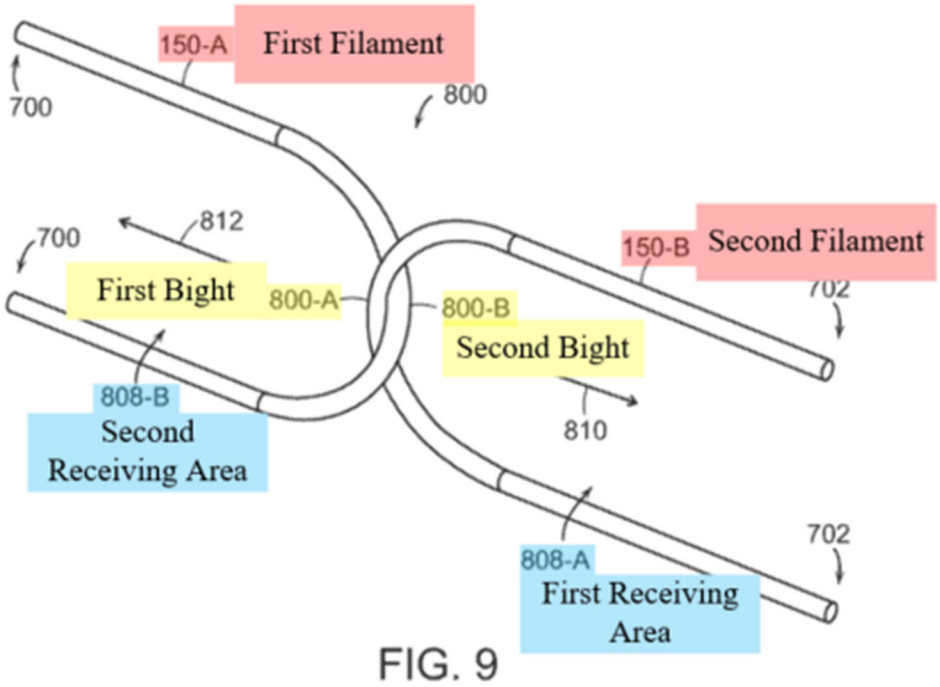

FIG. 9

Id. 13:62-14:5.

48. As I note above, the easy one-handed operation and strong seal of the garrote valve is particularly useful in vacuum thrombectomy procedures. Figure 11 of the ’012 patent discloses one example of a thrombectomy system 1100

including a thrombus extraction device 1102 inserted through the garrote valve 104 and a coupled aspiration catheter 102 that is used to treat and/or extract a thrombus 1106 from the blood vessel 1104:

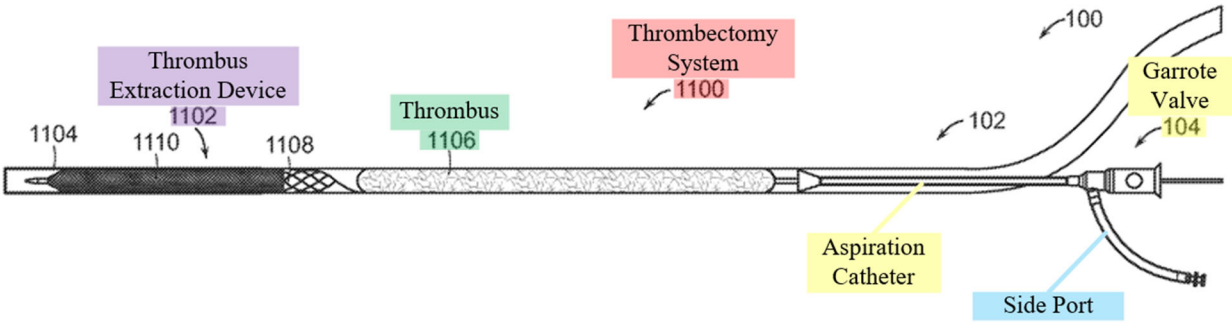

FIG. 11

Id., 16:7-12. The aspiration catheter 102 is fluidly coupled to a side port that is used to apply a vacuum to the aspiration catheter 102 to aspirate clot material therethrough. *Id*. at 10:37-45. The garrote valve 104 is particularly useful in such thrombectomy procedures to provide for convenient single-handed access to the lumen of the aspiration catheter 102 while also providing robust sealing with or without the thrombus extraction device 1102 inserted therethrough during vacuum aspiration of the aspiration catheter 102 via the side port. *Id*. at 5:55-6:6. More particularly, the garrote valve 104 provides robust sealing and easy access to the aspiration catheter 102 when the aspiration catheter 102 is a large-bore catheter wherein blood loss is a significant concern during a thrombectomy procedure.

49. For example, the aspiration catheter 102 can have an outer diameter of "at least 18 French, at least 20 French, at least 22 French." *Id*. at 6:41-45. Sealing a large-bore catheter is particularly challenging because of the large lumen size and the additional polymer material inherent to the larger catheter, requiring additional and focused material collapse/compression. A garrote valve that essentially "cinches" at a particular point is necessarily more effective in this setting than alternative valve configurations imposing diffuse sealing force. Thus, a POSITA would understand, for example, the garrote valve to be particularly useful in thrombectomy procedures using large-bore catheters to apply significant vacuum pressure, such as thrombectomy procedures used to treat pulmonary embolism or deep vein thrombosis.

50. Overall, the garrote valve's design prioritizes user control, allowing for single-handed operation while maintaining the integrity of the catheter system, including in the face of significant pressure differentials applied during aspiration thrombectomy procedures. In particular, the design allows for quicker and more effective sealing of large-bore catheters used for aspiration thrombectomy in large veins and pulmonary arteries, such as for treating deep vein thrombosis or pulmonary embolism. These features are important to treating physicians and critical to patient health. A robust seal and quick, self-closing valve are critical to reduce patient blood loss during procedures, which can be

significant through a large catheter. Traditional rotating hemostasis valves take many turns to seal the larger bore catheters used in such procedures. The incorporation of bias features and springs ensures that the actuator can quickly and easily function effectively, providing a reliable and efficient means of achieving hemostasis.

B. Prosecution History of Claim 1

51. I have reviewed the prosecution history of the ’012 patent, including the Restriction Requirement mailed September 20, 2022 (EX1002, pp. 178-183), the Response to Restriction Requirement filed October 28, 2022 (*Id*. at pp. 171-176), the Examiner-Initiated Interview Summary mailed November 23, 2022 (*Id*. at p. 88), the Notice of Allowance mailed November 23, 2022 (*Id*. at pp. 79-87), and the Notice of Allowance mailed April 27, 2023 (*Id*. at pp. 27-31).

52. The Examiner initially found the application to be directed to patentably distinct species and required an election between Species I (Figs. 1-5) or Species II (Fig. 12). *Id*. at p. 180. I further understand that, if Species I were elected, the Examiner required an additional election between distinct sub-species of filament: Species IA (Figs. 1-5), Species IB (Fig. 6), Species IC (Fig. 7), Species ID (Fig. 8), or Species IE (Fig. 9). *Id*.

53. The Applicant elected Species I (Figs. 1-5) and Species IB (Fig. 6.) in response. *Id*. at p. 175. I note that the elected Species IB is directed to the

filament loop embodiment rather than the bight embodiments (Figures 8 and 9) as I explain in §V.A. above. I note also that Figure 7 includes Figure 6—just with an additional filament loop—and that Figures 8 and 9 are in fact the same embodiment.

54. The Examiner conferred with the Applicant of the ’012 Patent via telephone to resolve an issue with antecedent basis in Claim 1 via an Examiner’s Amendment, before allowing the application. *Id*. at p. 88.

55. The Examiner considered the patentability of the claims in view of Hartley, Wong, and Myers and concluded that Hartley fails to disclose a “first spring,” that Wong fails to disclose a “constricting mechanism having a first filament formed in a loop,” and that Myers fails to disclose a “first filament.” *Id*. at pp. 85-87.

C. Cited References

56. Petitioner has cited three different references—Schaffer, Hartley, and Eller—in its Petition challenging the patentability of the claims of the ’012 Patent. I describe those references in this section below.

1. Schaffer

57. The sealing mechanism present in the hemostasis valve of the ’012 Patent is different from the sealing mechanism employed by Schaffer. As seen in Figure 12 below, Schaffer's mechanism involves several sealing components

within a seal module 100, specifically identified as seal members 165, 170, and 180.

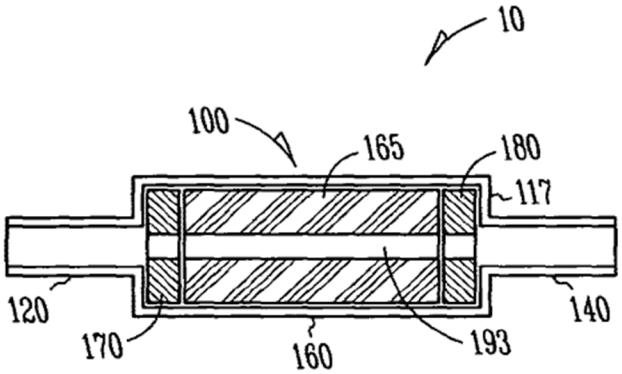

Fig. 12

58. These components are integral to Schaffer's sealing process, with seal member 165 being a consistent element in all of Schaffer's various embodiments. According to Schaffer, "[t]he third central seal member 165 is sized and configured to maintain an open lumen 193 when no compressive force 67 is applied." EX1005, ¶ [0054]. To achieve sealing, actuating members 55 are "forcibly pushed against the central portion of the seal module 100, [and] the compressive force 67 of the actuating member 55 against the outer wall 27 of the containment structure 160 inwardly depresses or collapses the third central seal member 165 of the containment structure 160 as the actuator 50 progresses toward the first side wall 23 of the housing 20." *Id.* at ¶ [0055]. The internal seal member 165 is made from a material 166 that is "highly elastic, deformable, compliant and yet virtually non-compressible." *Id.* at ¶ [0054]. This "highly compliant third central seal member 165 seals around a variety

of profile shapes 192 and diameters 194 of the lumen 193 when at least one side of compressive force 67 is exerted upon the central region 195 with respect to the central portion 110 of the containment structure 160." *Id.* at ¶ [0060].

59. In essence, Schaffer employs actuating members 55 to apply an external compressive force 67 to a seal module 100, without those actuating members 55 conforming to the outer surface of the seal module during compression. The internal seal member 165 adapts to various shapes and sizes to seal a lumen, as illustrated in Figures 16-19 below.

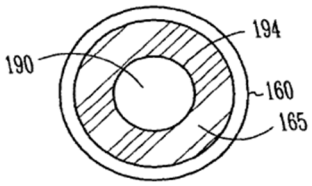

Fig. 16

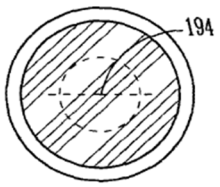

Fig. 17

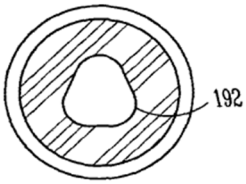

Fig. 18

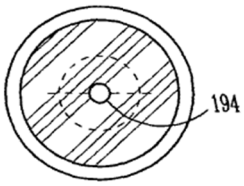

Fig. 19

Schaffer's internal seal member 165 provides a seal with precise control of compression force for easy manipulation of, and to prevent damage to, delicate tools inserted therethrough:

> Thus, the problems are complex and involve a balance between closing force, opening force, friction, compression and durability. If a valve is inordinately tight, having a closed lumen, it may not allow the insertion of soft, flexible instrumentation such as a "floppy-tip" guidewire, a delicate laser fiber or a soft-tipped catheter. Some catheters, optical fibers and fluid transmission tubes are very delicate and can be damaged by excessive compression or insertion force.

EX1005, ¶[0006].

60. Schaffer additionally explains that a "compressive load" necessary for sealing can be provided by a "movable, sliding or hinged, actuator 50," which results in a compressive force on the third central seal member 165, ensuring the seal is effectively formed and maintained. *Id.* at ¶ [0060]. However, the embodiments shown in Figures 12-15 disclose configurations that do not include actuating members, as they require "no compressive load for use in sealing the statis valve 10 closed." *Id.* at ¶ [0063]. In these embodiments, the sealing member 165 is relied upon to form a seal instead of the compressive load. As illustrated in Schaffer's Figures 13 and 14, "retrograde flow 270 forces the first seal member 170 toward the third central seal member 165 in the containment structure 160. As the first seal member 170 moves distally, or toward

the second seal member 180 under the influence of the pressure from the gas or fluid, the third central seal member 165 is compressed." *Id.* at ¶ [0065].

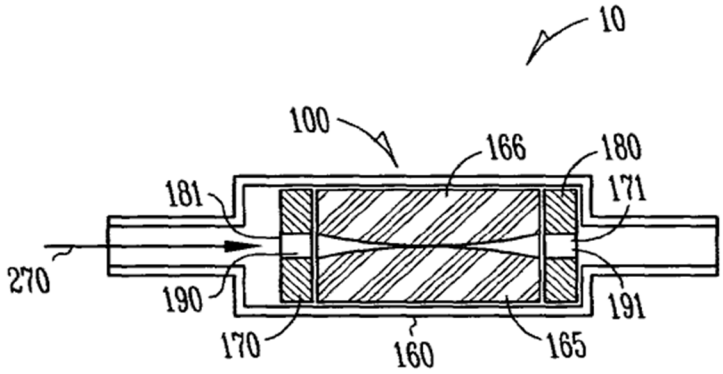

Fig. 13

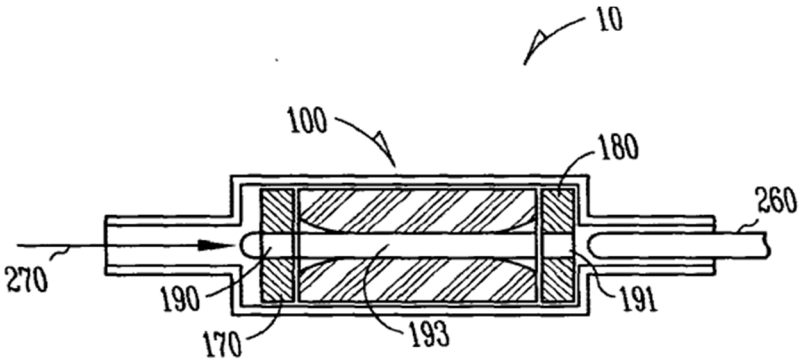

Fig. 14

61. Schaffer discloses that improved durability and control and ease of manufacture are among the several advantages of using a non-conforming actuating members 55 with an internal conforming seal member 165. In fact, each embodiment in Schaffer functions in this way, as illustrated in Figures 4, 6-8, 9-10, 12-15, and 23-29, and includes the seal member 165. Additionally, in relation to Figures 30-34 relied upon by Petitioner, Schaffer discloses that the

"seal module 100 is formed of one or more seal members, as discussed above" with reference to Figures 1-29 and that (i) in the first sealed position of the valve 10 the "lumen 193 of the third seal member 165 is at least partially collapsed by the compressive force 67" and (ii) in the second unsealed position of the valve 10 the "lumen 193 of the third seal member 165 is able to retract in an unsealed configuration." EX1005, ¶¶ [0075], [0077]. Thus, the embodiment of Figures 30-34 includes the seal member 165.

2. Hartley

62. As shown below, Hartley describes an access valve featuring a string 14 that extends around a cylindrical elastomeric diaphragm 8 and is secured by knots 16 and 18 to a single rotary actuator 12. EX1006, ¶ [0031]. This rotary actuator 12 is a single, integral piece, such that that both knots 16 and 18 are attached to the same actuator. Consequently, the single rotary actuator 12 controls the movement of both ends of the string 14.

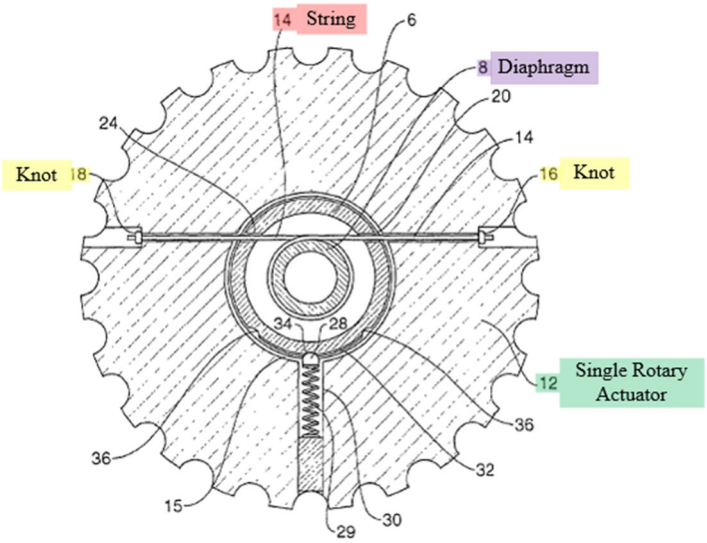

Fig 3

3. Eller

63. As displayed below, Eller describes a selective fluid barrier device 810 that comprises a housing 816, an actuator 818, a sleeve 820, and a wire member 822 with a first end 924 attached to the housing 816 and a second end 926 attached to the actuator 818. EX1007, 23:50-62, 24:50-52. Additionally, Eller describes other embodiments featuring multiple wire members, each with a first end connected to a housing and a second end connected to a single actuator. In all these embodiments, the wire members have one end fixed to the housing and the other end attached to the actuator. The actuator's movement (e.g., rotation or translation) pulls only the second end of the wire member, while the first end remains stationary. Thus, the movement of the single actuator governs the movement of the wire member.

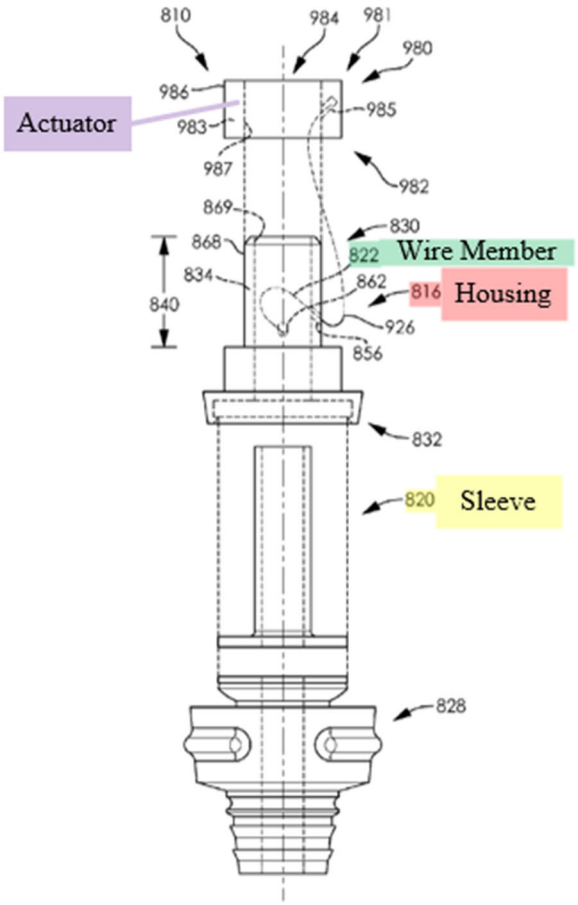

FIG. 20

4. **Garrison**

64. Because of the deficiencies of Schaffer, Hartley, and Eller I explain below with reference to grounds 1-4, I do not analyze the details of Garrison. Nevertheless, I reserve my right to further review and assess any independent reasons of patentability for the claims in view of Garrison.

D. Construction of Claim 1

65. I understand that to properly construe a claim the words of the claim must be considered. I also understand terms are generally given their ordinary and

customary meaning as understood by a person of ordinary skill in the art at the time of the invention when read in the context of the specification and prosecution history unless the patentee "deviate[s] from the plain and ordinary meaning of a claim term by disavowing claim scope or acting as his own lexicographer." *Augme Techs., Inc. v. Yahoo! Inc.*, 755 F.3d 1326, 1333 (Fed. Cir. 2014). I understand that in order for a patentee to act as its own lexicographer, it "must 'clearly set forth a definition of the disputed claim term' other than its plain and ordinary meaning." *Cont'l Cirs. LLC v. Intel Corp.*, 915 F.3d 788, 796 (Fed. Cir. 2019).

1. "Filament"

66. Claim 1 recites "a constricting mechanism having … a first filament formed into a loop around the collapsible tubular sidewall." Here, the '012 patent uses and applies the plain and ordinary meaning for the term "filament"— a "thin, flexible length of material formed by one or more strands of material"— as would be understood by a person of ordinary skill in the art as of September 6, 2017. The claim language itself, the specification, the prosecution history, and other evidence, including dictionaries, support that this is the plain and ordinary meaning of "filament". References in the patent to example materials that can be used to make the filament does not change that meaning.

67. I understand that Petitioner contends that the proper construction for "filament" is "at least 'one or more threads, lines, cords, ropes, ribbons, flat wires, sheets, or tapes.'" Petition, p. 16. In other words, Petitioner argues that a filament is any structure that includes "at least one or more" of the recited list of non-limiting structures provided in a list at column 9, lines 21-23 of the specification of the '012 patent. I disagree.

68. The claim language itself confirms that a filament must be flexible. Claim 1 recites that "the first filament [is] formed into a loop around the collapsible tubular sidewall" and that a "diameter of the valve lumen decreases in response to reducing a diameter of the loop." To "reduc[e] a diameter of the loop," the filament must be "flexible" because if it were rigid or inflexible the loop would retain the same diameter when acted on by the first actuator. That is, a loop in a rigid filament would necessarily be fixed in size. In contrast, because a filament is flexible, the first filament can be pulled by the actuator to reduce a diameter of the loop. This inherent property of flexibility is essential to the loop structure of the claims. Thus, a POSITA would understand that the recitation that the filament "formed into a loop" such that a "diameter of the valve lumen decreases in response to reducing a diameter of the loop," requires a flexible component consistent with the plain and ordinary meaning of filament.

69. The specification further confirms that a filament must be flexible. Specifically, Figure 6 of the ’012 Patent—which was elected by the Applicant of the ’012 Patent in Response to a Restriction Requirement during prosecution of the ’012 Patent (EX1002, pp. 171-176)—shows a single filament 150 configured to form a single loop 604 that extends around the elongate member 132:

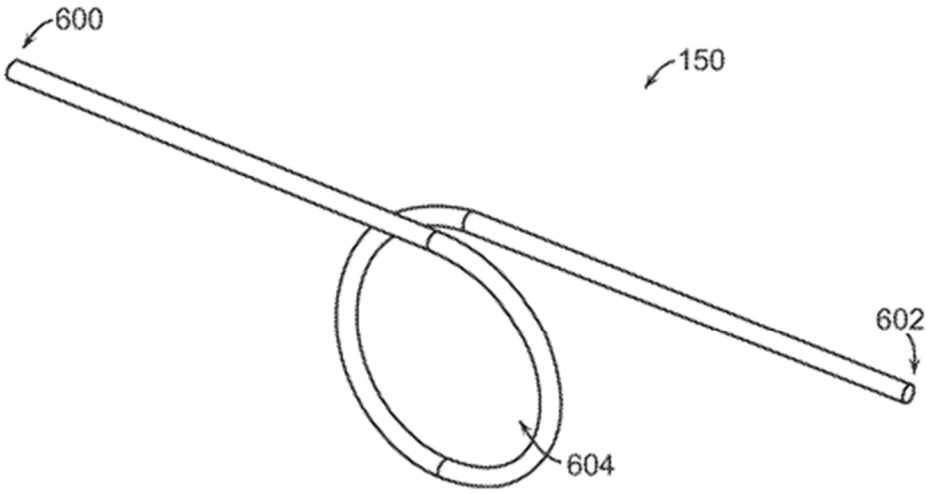

FIG. 6

EX1001, 13:17-21. “[E]ach of the first end 600 and the second end 602 can be coupled to different buttons 144” of the actuator. *Id*. at 12:54-56. When these buttons are actuated, they exert opposing forces on the respective filament ends, causing the loop’s diameter to decrease and constrict the elongated member. If the filament of Figure 6 were completely inflexible, it could not work as intended. That is, applying a force that seeks to pull the respective ends 600 and 602 of the filament in opposing directions would not decrease

the "diameter of the loop" as recited in Claim 1—the loop would stay the same size and an elongate member extending through that loop would not be constricted and sealed. *Id*. at 13:26–29. Thus, in the above embodiment the filament must be sufficiently flexible that it can decrease the size/diameter of the loop to constrict and seal the valve, consistent with the plain and ordinary meaning of filament. Likewise, Figure 7 of the '012 Patent illustrates two filaments each formed into a loop that must also be sufficiently flexible to reduce in diameter. *Id*. at 13:22-29.

70. The specification of the '012 Patent further confirms that a filament must be flexible. For example, the specification discloses that when the buttons 144 are depressed in the second position, "the filament 150 is ***loosened***, thereby allowing the expansion of the elongate member 132 and the unsealing of the central lumen 138 of the elongate member 132." EX1001, 9:58-62 (emphasis added). Likewise, when the buttons are released to the first position, "the filament 150 is ***tightened***." *Id*. at 9:36-37. Thus, the ability of the filament to flex or slack is a necessary property of the claimed filament that allows the filament to "loosen" to thereby allow the elongate member to expand and unseal the valve and "tighten" to thereby constrict the elongate member. Accordingly, the specification confirms that the filament must be flexible to "loosen" and "tighten."

71. While the specification describes the filament as comprising various potential materials, such as "a polymer, a synthetic, and/or a metal" (EX1001, 9:13-15), that the filament can be formed from materials within broad categories like polymers and metals that can, but certainly do not have to, be formed into rigid components (depending on the structure) does not mean that the term "filament" is broadened from its plain meaning to include a rigid component. Flexibility is a function of both a structure's material and form. For instance, metals can be used to create a girder for a building, which is rigid, but metals can also be formed into long, narrow strands to produce a flexible wire or cable. Similarly, polymers—while potentially rigid in certain configurations—can be formed into flexible strands or lines that could serve as a filament. Thus, the material chosen to form the filament does not alter the plain and ordinary meaning of the term "filament" as understood by a POSITA, which is flexible and thin. Petitioner's misplaced reliance on the composition of the filament ignores the essential principle that the structural characteristics of a component, not merely the materials from which it is made, define its function and properties.

72. The prosecution history further supports that "filament" means a "thin, flexible length of material formed by one or more strands of material" because the prior art the Examiner asserted to include a filament was a flexible string. For

example, in the Notice of Allowance dated November 23, 2022, the Examiner states that Hartley discloses "at least one filament" at item 14. EX1002, p. 85. Item 14 is a string that is flexible given Hartley refers to this item as a "flexible member," explicitly reciting flexibility as a necessary characteristic. EX1006, ¶ [0034]. Accordingly, the file history demonstrates that the examiner understood that a "filament" is flexible, consistent with the term's plain and ordinary meaning.

73. Contemporaneous extrinsic evidence in the form of dictionaries also demonstrate that a "filament" is flexible. For example, the Merriam-Webster's Collegiate Dictionary defines a filament as "a single thread or a thin **flexible** threadlike object, process, or appendage." EX2002, p. 467 (emphasis added). Likewise, the New Oxford American Dictionary defines a filament as "a slender threadlike object or fiber." EX2003, p. 644.

74. Taking into account the claim language itself, the specification, the prosecution history, and other evidence, a POSITA would readily understand the degrees of flexibility required for the claimed filament—the filament must be sufficiently flexible so that it can loosen and reduce in diameter when formed in a loop as shown in Figures 6 and 7 of the '012 Patent. That is, a POSITA would understand that the filament must be flexible to the degree necessary to loosen when the actuator is depressed.

2. "Aspiration" in the Preamble

75. Because it is not relevant to my analysis of grounds 1-7 at this preliminary stage, I do not analyze the construction of "aspiration" in the preamble of Claim 1. Nevertheless, I may, if asked, further review and assess the proper construction of this term.

E. Person of Ordinary Skill in the Art

76. A POSITA in September 2017 would have had an undergraduate degree in mechanical engineering or a related engineering discipline and 2 to 4 years of product design or engineering experience designing medical devices in the field of the '012 Patent. A person with less education but more relevant practical experience, or more relevant education but less practical experience, may also meet this standard.

77. Petitioner asserts that a "POSITA in September 2017 would have had an undergraduate degree in mechanical engineering or a related engineering discipline and 2-4 years of product design or engineering experience." Petition, p. 15. I disagree—Petitioner's suggested definition is insufficient to qualify as a POSITA because, although Petitioner's suggested definition of a POSITA includes a comparable level of education to mine, it does not include any experience in designing medical devices, particularly in the context of the '012

Patent. Having experience in the relevant field is important for designing hemostasis valves.

78. Nevertheless, I apply Petitioner's definition throughout my declaration as, even under this too-low definition of ordinary skill, a POSITA would have understood the Claims of '012 Patent to be patentable over the prior art references cited in grounds 1–7. I was also at least a person of ordinary skill in the art as of the priority date of the '012 Patent according to this standard.

VI. GROUND 1—SCHAFFER ALONE DOES NOT ANTICIPATE INDEPENDENT CLAIM 1

79. Petitioner and its expert, Mr. Thornton, allege that Schaffer discloses each and every feature of Claim 1 of the '012 patent and therefore anticipates this claim. I disagree for the reasons I discuss in further detail in this section. A POSITA would understand that Schaffer does not disclose several limitations of Claim 1 and therefore does not anticipate Claim 1.

80. As I explained above, for a patent claim to be anticipated, each claim limitation must be present in a single piece of prior art. It is my understanding from counsel that a prior art reference can anticipate a claimed invention if the prior art reference disclosed each of the claimed limitations of the invention either expressly or inherently.

A. Schaffer does not disclose the "first filament" of Claim 1.

81. According to Petitioner, "Schaffer's U-shaped actuating members are a 'filament'." Petition, p. 36. That is, Petitioner contends that "Schaffer's U-shaped actuating members collectively constitute the 'first filament' claimed in the '012 patent." *Id*. at p. 37. I disagree—Schaffer's actuating members 55 are rigid metal or plastic U-shaped structures and not thin and flexible filaments.

82. As I explain in §V.D.1. above, the term "filament" means "a thin, flexible length of material formed by one or more strands of material." A POSITA would understand that Schaffer's actuating members 55 are rigid and therefore do not disclose a "first filament," as recited in Claim 1.

83. First, Schaffer illustrates its stasis valve 10 in a first (sealed) position and a second (open) position in Figures 32 and 34[1], respectively:

[1] I refer to the versions of Schaffer's drawings relied on by Petitioner that were submitted during prosecution on June 18, 2003 (EX1008) that Petitioner has asserted are clearer than the drawings in the published application.

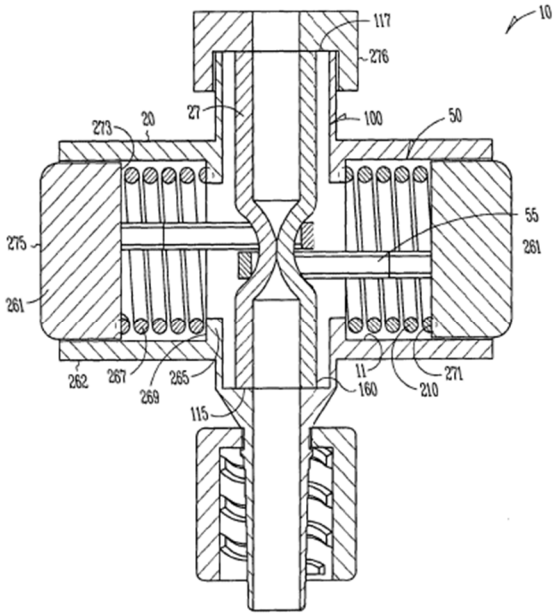

Fig. 32

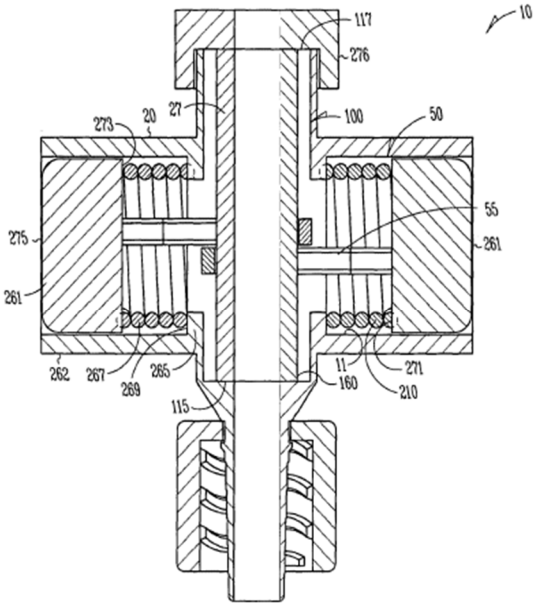

Fig. 34

Schaffer describes that "[i]n the first position the actuating members 55 of the actuators 50 are, in one option, disposed and at least partially circumferencially disposed about the portion 108 of the seal module 100 depressing and at least partially collapsing a portion 108 of the containment structure 160 by a compressive force 67 (e.g. by a spring 210)." EX1005, ¶ [0077]. "In the second position … each actuator button 261 is depressed" and "[s]uch movement allows each engaged actuating member 55 to **forcibly disengage** opposing outer walls 27 of the seal module 100 allowing the portion 108 of the containment structure 160 to retract to an uncollapsed configuration where gases and fluids can pass therethrough." *Id*. (emphasis added). That is, when the actuator buttons 261 are depressed, the actuating members 55 are forced to disengage from the seal module 100 with one of the actuating members 55

moving away from and out of contact with one of the outer walls 27 of the seal module 100 and the other one of the actuating members 55 moving away from and out of contact with the other opposing one of the outer walls 27 of the seal module 100.

84. A POSITA would understand that for each of the actuating members 55 to "forcibly disengage" opposing outer walls 27 of the seal module 100, the actuating members 55 must be rigid. For example, if the actuating members 55 were flexible, depressing the actuator buttons 261 to move the actuating members 55 would simply reduce a tension in the actuating members 55 such that they would deform without forcibly disengaging the seal module 100. That is, the flexible actuating members 55 would remain in contact with and never disengage the seal module 100, contrary to Schaffer's teachings.

85. Second, Schaffer teaches and Petitioner highlights that "Schaffer's actuating members [are] formed from metal or plastic." Petition, p. 43; EX1005, ¶¶ [0081]-[0082]. Further, Shaffer provides that the actuating members 55 are "machined from aluminum" or "machined from plastic." EX1005, ¶ [0082]. A POSITA would understand that these members are rigid and that machining is a manufacturing process in which the desired part (e.g., the U-shaped actuating members 55) is created using the controlled removal of a bulk material (e.g., plastic or metal), typically a rigid material. A POSITA would further

understand that flexible parts, such as a thin and flexible filament, are difficult to machine conventionally, as flexible materials will deform when force is applied during the machining process—inhibiting or even preventing accurate manufacturing of the part.

86. Third, Schaffer discloses how its stasis valve is assembled, which necessitates rigid members that provide a space through which the seal module can be inserted:

> [T]he stasis valve 10 is assembled by inserting the actuator button 261 and resilient member 267 (e.g., spring 210) into one side of the housing 20. The actuator button 261 and resilient member 267 (e.g., spring 210) are inserted into an opposing side of the housing 20. Each actuator button 261 is completely compressed and held while the seal module 100 is inserted through the housing 20 and between each actuator 50. Each actuator button is released and the cap 276 secured to the housing 20, for example, with an adhesive. Further, the connecting member 35 is snapped onto the housing.

EX1005, ¶ [0083]. That is, a POSITA would understand that each of the actuator buttons 261 and the springs 210 are inserted into the cylindrical opening defined by a corresponding one of the cylindrical interior walls 11 of the housing 20 until the springs 210 abut the inner flange wall 265, then the actuator buttons 261 are depressed to form an opening through the U-shaped actuating members 55, and finally the seal module 100 is inserted through the opening:

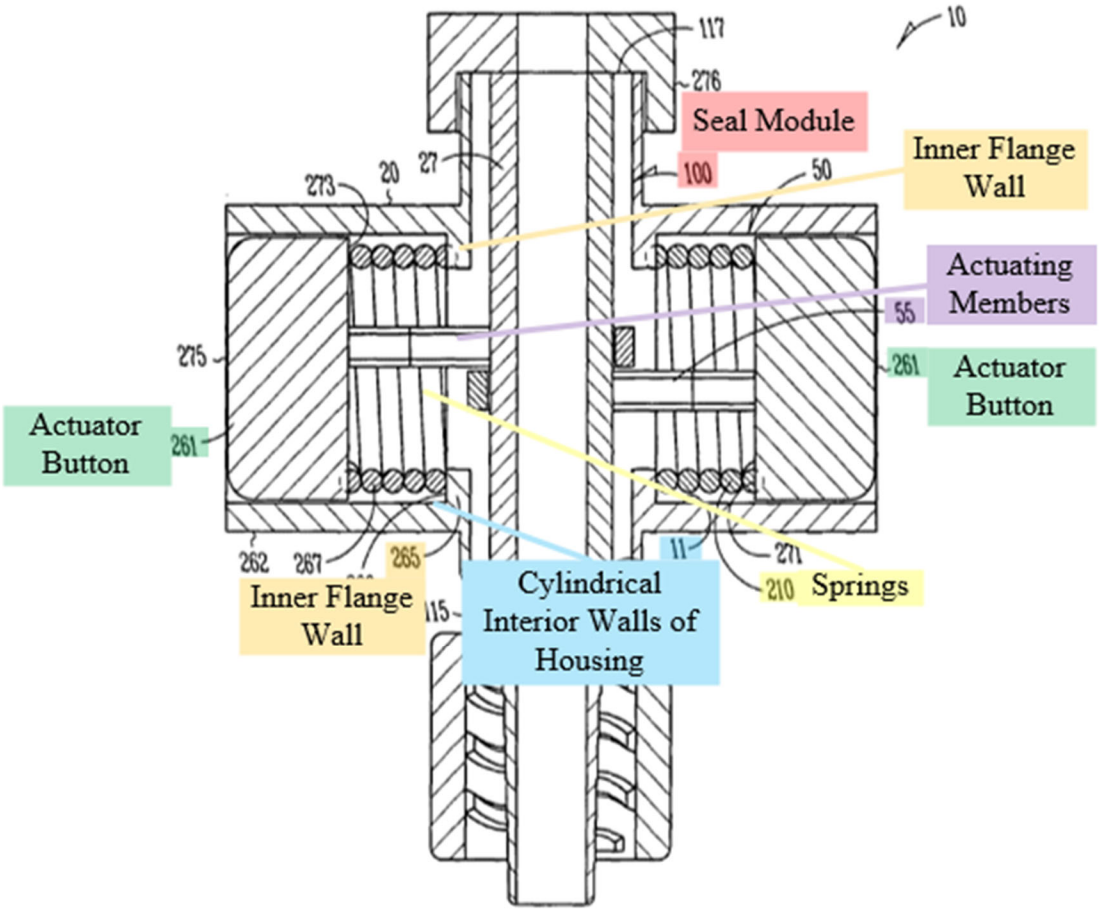

Fig. 34

87. A POSITA would understand that if the actuating members 55 were flexible rather than rigid, it would be much more difficult to assemble Schaffer's valve in the simple manner taught by Schaffer because the flexible actuating members would not provide a space through which the seal module 100 can be inserted. In particular, such flexible actuating members would be not tensioned (e.g., loose) when the actuator buttons 261 are compressed before the seal module 100 is inserted into Schaffer's valve such that they would not provide a uniform opening like the rigid actuating members 55 to permit

positioning of the seal module 100 therethrough. Accordingly, a POSITA would understand that Schaffer's actuating members 55 are rigid because, if they were not, it would render the actuating members 55 unsuitable for their intended purpose of simple manufacturability via insertion of the seal module 100 when the actuator buttons 261 are depressed. Further, the relaxed geometry of the proposed flexible actuating members 55 would be unpredictable and uncontrolled because of their flexibility—they would not hold their shape and could, for example, move or deflect along the seal module 100 in the relaxed open configuration.

88. In sum, a POSITA would understand based on Schaffer's description and illustration of the operation of the actuating members 55, its description of the materials and methods of forming the actuating members 55, as well as its description of how its stasis valve is assembled, that the actuating members 55 are rigid rather than flexible. As such, Schaffer's actuating members 55, either alone or in combination, are not a "first filament" as claimed in the '012 patent because they are not flexible. Therefore, Schaffer does not disclose this feature of Claim 1 and thus does not anticipate Claim 1.

B. Schaffer does not disclose the "first filament formed into a loop around the collapsible tubular sidewall" of Claim 1.

89. Even assuming Petitioner's construction of "filament," Schaffer does not anticipate Claim 1 because Schaffer does not disclose a "first filament formed

into a loop around the collapsible tubular sidewall." Petitioner does not allege that either of the actuating members 55 is "formed into a loop" but instead alleges that "Schaffer's U-shaped actuating members collectively constitute the 'first filament' claimed in the '012 patent" and that "the actuating members collectively loop around the seal module 100." Petition, pp. 37-38. Indeed, neither of Schaffer's actuating members 55 are "formed into a loop" about the seal module 100 because they are rigid and U-shaped. EX1005, ¶ [0076].

90. I disagree that Schaffer's "depict[ion of] two actuating members is of no moment," as Petitioner and Mr. Thornton contend. Petition, p. 37. A POSITA would understand that Claim 1 of '012 Patent requires a single filament "formed into a loop" based on the specification and prosecution history of the '012 Patent. For example, as I explain in §V.A. above, the '012 Patent discloses multiple different filament arrangements in Figures 6–9. The term "loop" is only used to describe the embodiments shown in Figures 6 and 7—which respectively illustrate (i) an arrangement with one filament formed in a loop and (ii) an arrangement with two filaments in which each of the first filament and a second filament each form an individual loop:

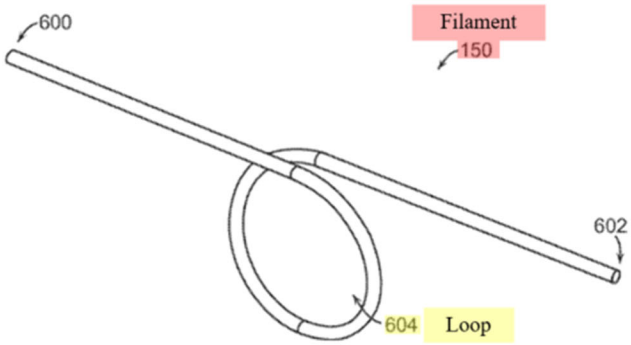

FIG. 6

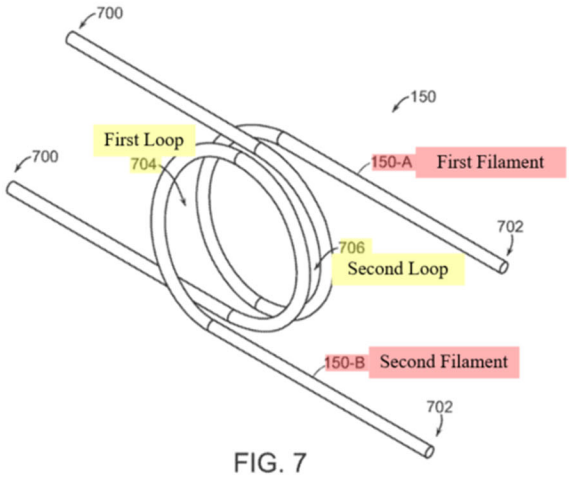

FIG. 7

EX1001, 13:18-25.

91. In contrast, Figures 8 and 9 of the ’012 Patent illustrate a two-filament arrangement on which a first filament and a second filament each form an individual U-shaped bight:

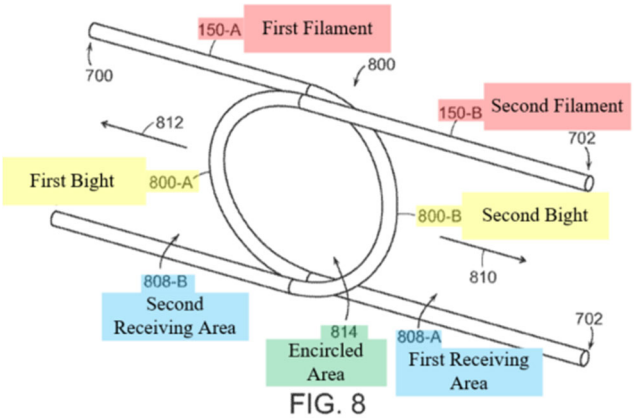

FIG. 8

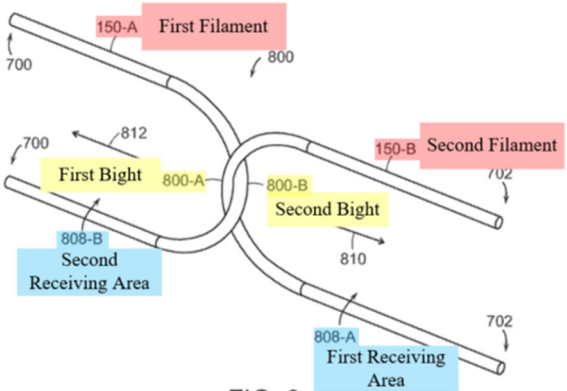

FIG. 9

In this arrangement of the filaments, the ’012 Patent discloses that the filaments each define a partially enclosed receiving area 808-A, 808-B, and together the first and second receiving areas 808-A and 808-B overlap to define an encircled area 814. *Id*. at 13:47-61.

92. Accordingly, a POSITA would understand that, when the ’012 Patent uses the term “loop,” the term refers to a single filament formed in a loop, and not multiple U-shaped filaments that overlap as shown in Figures 8 and 9. Multiple filaments each arranged in a U-shaped bight could collectively define an “encircled area” as shown in Figures 8 and 9—but not a “loop.”

93. The prosecution history of the ’012 Patent supports this understanding. In particular, as I describe above in §V.B. above, the Applicant elected the filament loop embodiments—rather than the filament bight embodiment of Figures 8 and 9—in response to the Restriction Requirement. EX1002, pp. 171-176. Accordingly, a POSITA would understand that Claim 1 requires at least one individual filament that is itself “formed into a loop” and excludes multiple filaments—including U-shaped filaments—that collectively, but not individually, define an encircled or other area of overlap.

94. Accordingly, Petitioner’s reliance on Figure 8 of the ’012 Patent to allege that the “first filament” of Claim 1 could comprise multiple filaments and thus that Schaffer’s U-shaped actuating members 55 could together comprise the “first filament” is incorrect. Petition, p. 37. The arrangement of Schaffer’s U-shaped actuating members 55 is similar to the embodiment shown in Figures 8 and 9 of the ’012 Patent as illustrated in the comparison below:

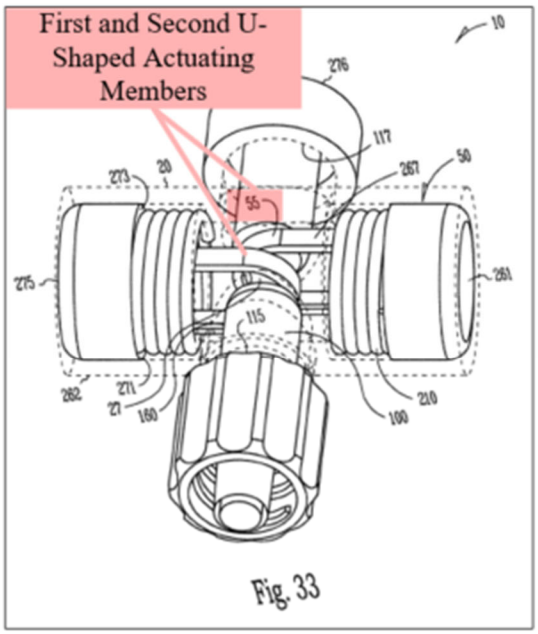

Schaffer's Valve 10 Opened

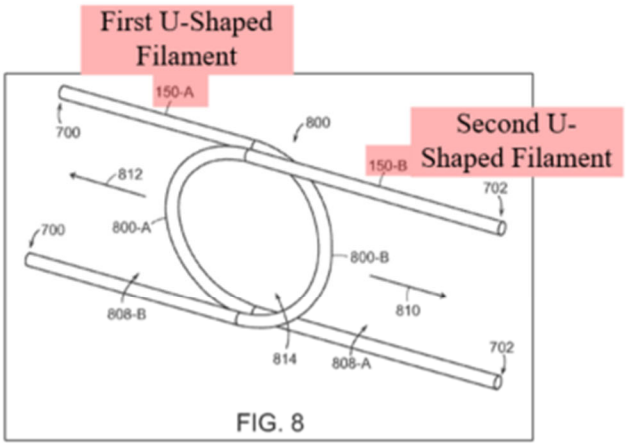

'012 Patent Figure 8

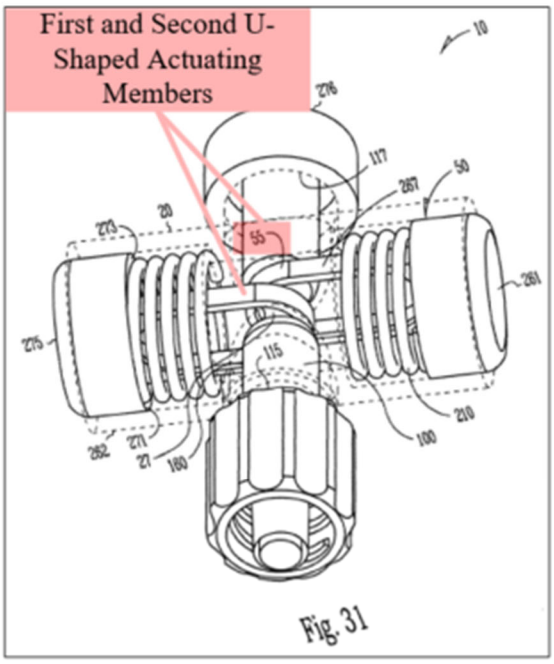

Schaffer's Valve 10 Closed

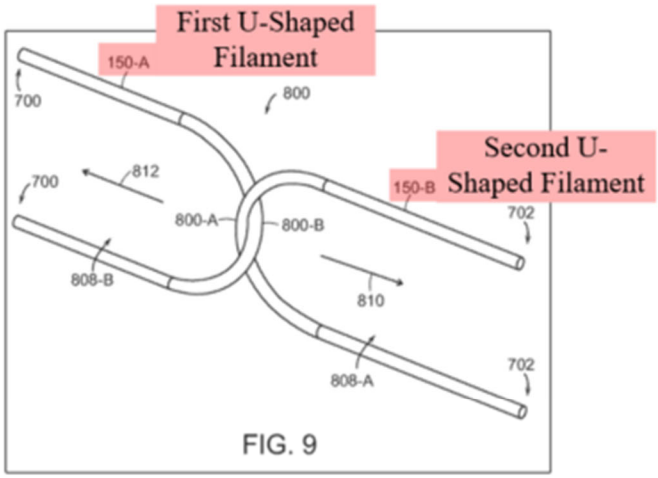

'012 Patent Figure 9

95. But, as I explain above, the '012 Patent does not disclose that the arrangement of multiple filaments in Figures 8 and 9 forms a "loop"—instead the bights

800-A, 800-B overlap to define an encircled area 814. The term "loop" is used only with reference to Figures 6 and 7 of the '012 Patent which each show one or multiple filaments each individually forming a loop. That is, a POSITA would understand that the bight embodiment of Figures 8 and 9 to be a distinct alternative to the loop embodiments of Figures 6 and 7.

96. In sum, a POSITA would understand based on the specification and prosecution history of the '012 Patent that Claim 1 requires a single filament "formed into a loop." Both of Schaffer's actuating members 55 are U-shaped and are therefore not "formed into a loop." Accordingly, Schaffer does not disclose this feature of Claim 1 and thus does not anticipate Claim 1.

C. Schaffer does not disclose the "diameter of the valve lumen decreases in response to reducing a diameter of the loop" of Claim 1.

97. Even assuming Petitioner's construction of "filament," Schaffer does not anticipate Claim 1 for the additional reason that Schaffer does not disclose "a diameter of the valve lumen decreases in response to reducing a diameter of the loop." As I explain above in §VI.B., neither of Schaffer's two U-shaped actuating members 55 "form a loop," and the two actuating members 55 cannot together be construed as the "first filament" of Claim 1. Accordingly, because Schaffer does not disclose a "first filament formed into a loop," Schaffer cannot disclose a "reducing a diameter of the loop." Moreover, the shape and dimension of Schaffer's actuating members 55 cannot reduce or

otherwise change during operation of Schaffer's valve 10 because the actuating members are rigid, as I explain above in §VI.A.

VII. GROUND 2—SCHAFFER DOES NOT RENDER OBVIOUS INDEPENDENT CLAIM 1

98. Petitioner and its expert, Mr. Thornton, allege that Schaffer, if it does not anticipate, renders obvious Claim 1 of the '012 Patent. I disagree for the reasons I discuss in further detail in this section. A POSITA would understand that it would not have been obvious to modify Schaffer to arrive at the features of Claim 1. Therefore, Schaffer does not render obvious Claim 1.

99. I understand that for a patent claim to be rendered obvious, the differences between the claimed invention and the prior art must be such that the claimed invention as a whole would have been obvious before the effective filing date of the claimed invention to a person having ordinary skill in the art to which the claimed invention pertains, the claimed invention is obvious. Even if all limitations of a claimed invention are disclosed by the prior art combination, Petitioner must demonstrate an apparent reason to combine the known elements in the fashion of the patent claim at issue and that a person of ordinary skill in the art would have reasonable expectation of success in pursuing that combination. A prior art reference teaches away from a modification of a prior art reference when a person of ordinary skill in the art would be

discouraged from following the path set out in the reference, or would be led in a direction divergent from the path followed by and claimed in the patent.

100. As I explain in §VI.A-C. above, Schaffer does not disclose (1) a "first filament" that is flexible, (2) a "first filament formed in a loop," or (3) a "diameter of the valve lumen decreases in response to reducing a diameter of the loop." I understand that Petitioner does not assert that it would have been obvious for a POSITA to have modified Schaffer to arrive at any of the foregoing features of Claim 1. Instead, Petitioner alleges that it would have been obvious to have modified Schaffer to arrive at other features of Claim 1, such as the "aspiration catheter" recited in the preamble and a "hemostasis valve on the proximal end of the catheter." Petition, pp. 24-27 & 29-32. Accordingly, because Schaffer does not disclose the features (1)–(3) of Claim 1 listed above, and Petitioner does not contend that Schaffer alone renders such features obvious, Schaffer does not render obvious Claim 1.

101. Nor would it have been obvious to have modified Schaffer to arrive at the foregoing features of Claim 1. In particular, as I explain below in §§VIII.A.-E., a POSITA would understand that Schaffer's valve seals completely with or without instruments inserted therethrough and that any modification to make the U-shaped members flexible would render Schaffer inoperable for its intended purposes of easy manufacturability, durability, and assembly.

VIII. GROUNDS 3 AND 4—THE COMBINATIONS OF SCHAFFER AND HARTLEY OR ELLER DO NOT RENDER CLAIM 1 OBVIOUS

102. Petitioner and its expert, Mr. Thornton, allege that Schaffer in combination with Hartley or Eller renders obvious Claim 1 of the ’012 patent. I disagree for the reasons I discuss in further detail in this section. A POSITA would not have been motivated to or found it obvious to modify Schaffer in view of Hartley or Eller to arrive at the features of Claim 1. Therefore, the combination of Schaffer and Hartley does not render obvious Claim 1.

103. As I explained above, I understand that for a patent claim to be rendered obvious, the differences between the claimed invention and the prior art must be such that the claimed invention as a whole would have been obvious before the effective filing date of the claimed invention to a person having ordinary skill in the art to which the claimed invention pertains, the claimed invention is obvious. Even if all limitations of a claimed invention are disclosed by the prior art combination, Petitioner must demonstrate an apparent reason to combine the known elements in the fashion of the patent claim at issue and that a person of ordinary skill in the art would have reasonable expectation of success in pursuing that combination. A prior art reference teaches away from a modification of a prior art reference when a person of ordinary skill in the art would be discouraged from following the path set out in the reference, or

would be led in a direction divergent from the path followed by and claimed in the patent.

104. Petitioner argues that "POSITAs would have found it obvious to substitute Hartley's string for Schaffer's actuating members." Petition, pp. 42-46. Likewise, Petitioner argues that "POSITA would have found it obvious to substitute Eller's wire member for Schaffer's actuating members" as an alternative to substituting Hartley's string. Petition, pp. 50-54.

105. I disagree that it would have been obvious to have, or that a POSITA would have, substituted Hartley's string or Eller's wire member for Schaffer's U-shaped actuating members 55 for at least the reasons set forth below.

A. Petitioner's Stated Motivations to Modify Schaffer in View of Hartley or Eller Are Based on an Incorrect Understanding of the Sealing Mechanism of Schaffer Which Is Designed to Eliminate Gaps With or Without Instruments Inserted Through the Valve.

106. A POSITA would not have been motivated to modify Schaffer to substitute Hartley's string or Eller's Wire for Schaffer's U-shaped actuating members as in Petitioner's proposed combination because Schaffer expressly discloses and illustrates the ability of its valve to seal completely across a wide range of instruments. Specifically, I disagree with Petitioner's stated motivation to modify Schaffer in view of Hartley ("POSITAs would have recognized that Hartley's string may seal more effectively across a wider range of diameters and shapes for the inserted devices than Schaffer's U-shaped actuating

members") or Eller ("POSITAs would have recognized that Eller's wire may seal more effectively across more device diameters and shapes than Schaffer's actuating members"). Petition, pp. 42, 50.

107. I also disagree with Petitioners assertion that "Schaffer's U-shaped actuating members may form small gaps between the valve's lumen and the tool's outer surface" as purportedly shown by Mr. Thornton's simple graphic. *Id.* at pp. 42-43. Petitioner's assertions that substituting Hartley's string or Eller's wire member "would not suffer from this potential issue because the string encircles the central lumen and precisely conforms to the diameter of the inserted devices" is based on an incorrect understanding of Schaffer, and more specifically, Schaffer's sealing member 165. *Id*. at 43, 50; EX1003, ¶¶ 100, 115. A POSITA would understand that small gaps would not form in Schaffer's valve.

108. In short, Schaffer contradicts Petitioner's purported motivations to have substituted Hartley's string or Eller's wire member for Schaffer's U-shaped actuating members. Schaffer recites that "**existing devices** do not perform a **complete seal** against leakage **in the presence of a wide range of instruments** or in the presence of multiple instruments." EX1005, ¶ [0006] (emphasis added). Schaffer continues that its valve addresses this issue of prior valves, specifically via "a durable stasis valve that **blocks the flow of gas or fluid**

completely and immediately **with or without an instrument in place within the gas/fluid path**." *Id*. at ¶ [0008] (emphasis added). Based at least on this disclosure of Schaffer, a POSITA would understand that Schaffer's valve is explicitly designed to—and does—seal effectively and completely (i.e., without gaps) in the presence of a wide range of different instruments, or without any instruments inserted therethrough.

109. Schaffer expressly discloses and illustrates the ability of its valve to seal completely across a wide range of instruments using a third central seal member 165 that is included in every embodiment of Schaffer—including the embodiment of Figures 30-34—as I explain above in § V.C.1. For example, Schaffer discloses with respect to Figures 30-34 that the "seal module 100 is formed of one or more seal members, as discussed above" with reference to Figures 1-29 and that (i) in the first sealed position of the valve 10 the "lumen 193 of the third seal member 165 is at least partially collapsed by the compressive force 67" and (ii) in the second unsealed position of the valve 10 the "lumen 193 of the third seal member 165 is able to retract in an unsealed configuration." EX1005, ¶¶ [0075], [0077]. Therefore, Schaffer is clear that the embodiment of Figures 30-34 includes the seal member 165.

110. Schaffer discloses how the third central seal member 165 completely seals, without gaps, around a variety of instruments with reference to Figures 16-19:

"the highly compliant third central seal member 165 seals **around a variety of profile shapes 192 and diameters 194 of the lumen 193** when at least one side of compressive force 67 is exerted upon the central region 195 with respect to the central portion 110 of the containment structure 160":

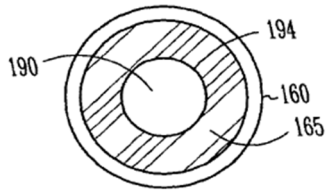

Fig. 16

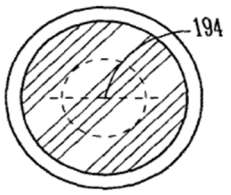

Fig. 17

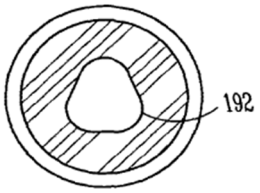

Fig. 18

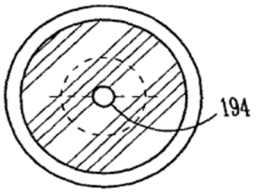

Fig. 19

Id. at ¶ [0060] (emphasis added). The "material 166 of the third central seal member 165 is so compliant that it forms a seal around [multiple instruments 260 [inserted therethrough] even if the instruments 260 are irregularly shaped." *Id*. at ¶ [0068].

111. A POSITA would understand based on the foregoing disclosure of Schaffer that the third central seal member 165—included in the embodiment of

Figures 30-34 along with every other embodiment of Schaffer—completely seals without gaps "around a variety of profile shapes 192 and diameters 194 of the lumen 193" of the third seal member 165 due to, for example, the highly compliant nature of the seal member 165. *Id*. at ¶ [0060]. For example, a POSITA would understand Figure 16 of Schaffer to show the seal member 165 sealing without gaps around a large circular lumen 193, Figure 17 to show the seal member 165 in a sealed state with the lumen 193 completely closed (e.g., without an instrument inserted through the lumen 194), Figure 18 to show the seal member 165 sealing around an irregularly shaped lumen 193, and Figure 19 to show the seal member 165 sealing around a small circular lumen 193.

112. I understand that in an IPR in related U.S. Patent No. 11,697,011, Petitioner's expert Mr. Thornton stated at deposition that there would be no need to modify Schaffer's U-shaped actuating members if Schaffer forms a complete seal around various instruments. EX2007, 116:18-117:2. ("If it worked perfectly for all the range of tools, then there probably wouldn't be a need to make adjustments and move to a string-type member.") I agree. And, as I explained above, Schaffer's valve does just that—seal around all the range of tools.

113. Accordingly, a POSITA would not have been motivated to modify Schaffer or to have substituted Hartley's string or Eller's wire member for Schaffer's

U-shaped actuating members to form a better seal and avoid the potential formation of gaps because Schaffer expressly discloses and illustrates that its valve performs both of these functions. Mr. Thornton's figure showing purported gaps is based on an incorrect understanding of Schaffer, and more specifically, the function of the seal member 165.

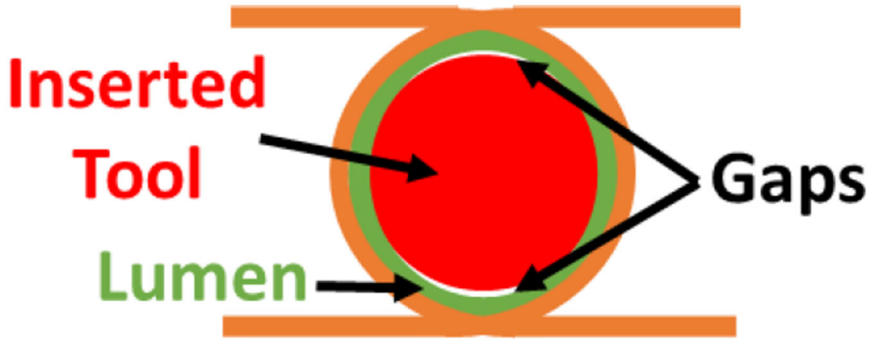

Petition, p. 43. As described above, Schaffer expressly discloses that the seal module 100 including the seal member 165 completely seals around a variety of profile shapes and diameters of the lumen, around small instruments, around large instruments, in the absence of instruments, and even around irregularly shaped instruments:

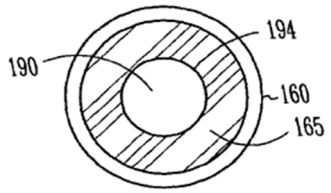

Fig. 16

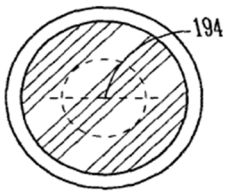

Fig. 17

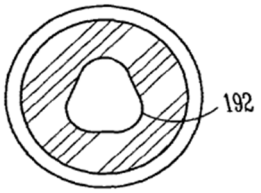

Fig. 18

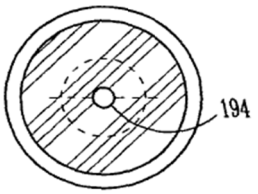

Fig. 19

It does so via compression of the highly-compliant seal member 165 with the rigid actuating members 55.

114. The Petition largely ignores Schaffer's disclosure that its valve would completely seal, specifically how its rigid actuating members 55 operate in conjunction with the seal member 165 to form a complete seal around instruments of different shapes. Petitioner does argue that Patent Owner's similar arguments in the related IPR regarding U.S. Patent No. 11,697,011 that "Schaffer's valve would not create gaps" is not supported by "the portions of Schaffer cited by" Patent Owner. Petition, p. 43. However, as I explain above and in §V.C.1, Schaffer discloses that the seal member 165 is included in **every**

embodiment, including the embodiment of Figures 30-34. *See*, e.g., EX1005, ¶¶ [0075], [0077] (Schaffer provides with respect to Figures 30-34 that the "seal module 100 is formed of one or more seal members, as discussed above" and that (i) in the first sealed position of the valve 10 the "lumen 193 of the third seal member 165 is at least partially collapsed by the compressive force 67" and (ii) in the second unsealed position of the valve 10 the "lumen 193 of the third seal member 165 is able to retract in an unsealed configuration."). Likewise, Schaffer discloses that in **every embodiment** the seal member 165 is highly compliant to effect a seal around tools of different shapes. *See*, e.g., *id*. at ¶ [0057] ("[t]low friction nature of the first and second seal members 170, 180 is in contrast to the highly deformable and compliant nature of the third central seal member 165"), ¶ [0160] ("the highly compliant third central seal member 165 seals around a variety of profile shapes 192 and diameters 194 of the lumen 193 when at least one side of compressive force 67 is exerted upon the central region 195"), ¶ [0068] ("[t]he material 166 of the third central seal member 165 is so compliant that it forms a seal around the instruments 260 even if the instruments 260 are irregularly shaped").

115. I understand that in the Institution Decision, the Board stated that Schaffer's disclosure of the "use of certain materials for portions of a seal module that provide 'a nearly fluid/gas tight seal' and 'exhibit[] a 'selfclosing' nature,' …

concern only some embodiments, using optional features" and that the "valve of Schaffer's Figures 30–34 does not require a seal module that includes the above-described optional third seal member with an extremely compliant, soft, gelatinous, self-closing material." Institution Decision, p. 41. Petitioner's expert, Mr. Thornton, similarly contends that "[n]othing in Schaffer suggests that the third valve portion must be made with a 'sticky' or 'gelatinous' substance" because paragraph [0059] of Schaffer discloses "many other materials that would not be 'sticky' or 'gelatinous' that could make up that same portion of the valve." EX1003, ¶ 86. Regardless of whether the sticky, gelatinous, and self-closing material is optional, and as I explain above, Schaffer's Figures 30-34 **do require** the third seal member 165 that is highly compliant to effect sealing under compression. That is, even if Schaffer discloses embodiments of the third seal member 165 that are not "sticky" or "self-closing," the seal member 165 nevertheless effects a complete seal without gaps due to its highly-compliant nature. In other words, every embodiment disclosed by Schaffer can effect a complete seal by virtue of the third seal member 165, regardless of whether the third seal member 165 is "sticky" or "gelatinous."

116. In order for Schaffer's valve to form the gaps as alleged by the Petitioner and its expert, a POSITA would have to first **modify** Schaffer's valve to **remove**

the third seal member 165, because as I explained above the presence of the third seal member 165 effects a complete seal. But a POSITA would not have any reason to remove the third seal member 165 because its presence achieves Schaffer's goals of creating a "stasis valve that blocks the flow of gas or fluid completely and immediately with or without an instrument in place" and forming a "complete seal against leakage in the presence of a wide range of instruments or in the presence of multiple instruments." EX1005, ¶¶[0006], [0008].

117. Further, even assuming that (a) Schaffer discloses using materials that are not sticky or self-closing, and (b) the absence of a such a sticky or self-closing material would create gaps (which I disagree agree with for the reasons explained above), neither Petitioner nor its expert Mr. Thornton explain why a POSITA would have substituted Hartley's string or Eller's wire member for Schaffer's U-shaped members rather than simply use the specific sticky and self-closing material taught by Schaffer. As I explain below in §VIII.C., unlike using the specific material taught by Schaffer or adjusting other simple properties of Schaffer's valve (e.g., spring strength), using Hartley's string or Eller's wire member with Schaffer's valve would not be a simple substitution. Further, as I explain below in §§VIII.D.-E., such a modification would greatly hinder the durability and ease of manufacturing of Schaffer's valve and likely

render Schaffer's valve inoperable. Thus, in this scenario, a POSITA would have been motivated to use the sticky and self-closing material taught by Schaffer—which Schaffer expressly discloses can provide a complete seal around a wide variety of instruments—rather than completely redesign Schaffer's valve in view of Hartley or Eller.

118. Moreover, Petitioner's proposed combination could actually seal less effectively (and would not seal any more effectively than Petitioner's allegedly defective Schaffer valve without the seal member 165) around multiple instruments inserted through Schaffer's valve and/or when an instrument is irregularly shaped—scenarios for which Schaffer's valve is specifically designed to form a seal as I explain above. For example, if two circular instruments were inserted side-by-side through Schaffer's seal module, Hartley's string or Eller's wire member in Petitioner's combination (which removes the sealing properties of Schaffer's seal member 165 in order to manufacture a motivation to substitute Hartley or Eller) would be unable to seal the space (e.g., gaps/divots) between the instruments in Petitioner's combination as I demonstrate below:

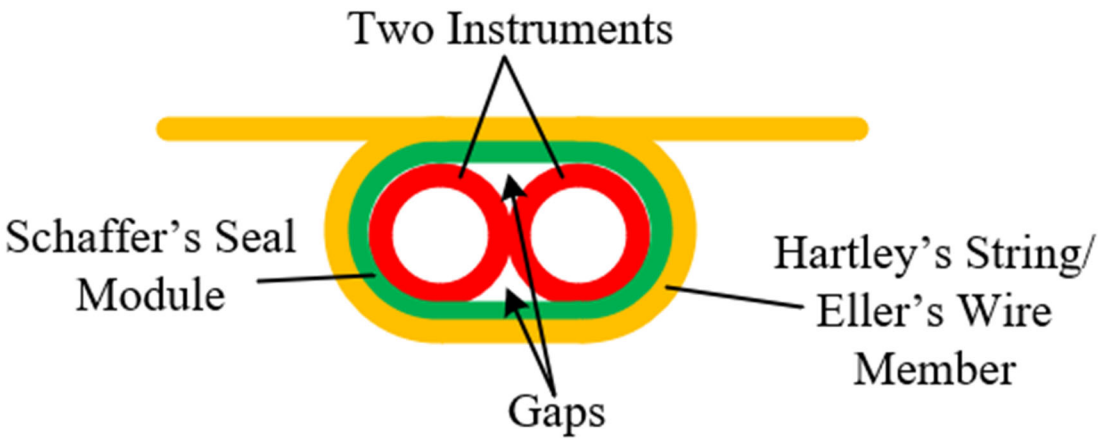

Thus, a POSITA would not have had a reasonable expectation of success at achieving Schaffer's goal—"a durable stasis valve that blocks the flow of gas or fluid completely and immediately with or without an instrument in place," including "**in the presence of a wide range of instruments or in the presence of multiple instruments**"—by modifying Schaffer's valve to include Hartley's string or Eller's wire member. EX1005, ¶¶ [0006] and [0008] (emphasis added). In contrast, Schaffer's sealing member 165 is designed to seal when multiple instruments are inserted through the valve, and thus a POSITA would have reasonably expected Schaffer's disclosed designs to achieve this goal. EX1005, ¶ [0068]. A POSITA would have simply utilized Schaffer's design including the seal member 165 to prevent gaps.

119. For the foregoing reasons, Petitioner's assertion that a POSITA would have been motivated to substitute Hartley's string or Eller's wire member for Schaffer's U-shaped actuating members to seal more effectively and avoid the

formation of small gaps is contradicted by Schaffer. Schaffer discloses a valve that addresses the then-existing need for complete sealing around a variety of instruments and specifically describes how the valve is configured to achieve such complete sealing by compression of the highly-compliant seal member 165 included in every embodiment of Schaffer. There was no need to change the sealing mechanism in Schaffer based on Schaffer's disclosure. Schaffer's structure is not deficient and would not leave gaps in the seal.

120. Mr. Thornton provides additional reasons why it would have been obvious to a POSITA to have substituted Harley's string or Eller's wire member for Schaffer's U-shaped actuating members in paragraph 86 of his declaration. EX1003, ¶ 100. I disagree with those reasons.

121. First, Mr. Thornton alleges that "Hartley's flexible string may better conform to varying diameters or shapes of tools inserted into the valve than Schaffer's U-shaped actuating members." *Id*. But, again, Schaffer's highly-compliant seal member 165 is specifically designed to conform to varying diameters and shapes of tools as shown in Figures 16-19. A POSITA would understand that there is simply not a need for the actuating members 55 to conform to a tool—and would not have so modified the actuating members—because the seal member 165 effectively conforms to the shapes of various tools to seal.

122. Second, Mr. Thornton attempts to support his argument that it would have been obvious to substitute Hartley's string or Eller's wire member for Schaffer's U-shaped actuating members to "seal more effectively" by stating that "even Schaffer recognizes it may not form a complete seal with the 'gelatinous' and 'sticky' valves identified by Patent Owner, stating the valves form a '***nearly*** fluid/gas tight seal'" in paragraph [0059] of Schaffer. *Id*. However, Mr. Thornton's analysis of Schaffer's disclosure omits the remainder of the citation which concludes that the "material 166 exhibits a 'selfclosing' nature in that it sticks occlusively to itself forming a nearly fluid/gas tight seal under very light compression." EX1005, ¶ [0059] (emphasis added). A POSITA would understand that the material 166 of the seal module 100 can form a nearly fluid/gas tight under very light compression, but would also understand that the compressive force 67 provided by the rigid actuating members 55 and springs 210 of Schaffer's valve 10 shown in Figures 31-34 would provide sufficient compression to the seal module 100, effecting a complete fluid/gas tight seal. *Id*. at ¶ [0077]. Indeed, as I explained in detail above, Schaffer expressly discloses that the purpose of the valve 10 is to "block[] the flow of gas or fluid **completely** and immediately with or without an instrument in place within the gas/fluid path." *Id*. at ¶ [0008].

123. Third, Mr. Thornton alleges that "Schaffer makes clear that the valves in Figures 31-34 do not require the third portion stating: 'The seal module 100 is formed of one or more seal members, as discussed above'" in paragraph [0075] of Schaffer. EX1003, ¶ 100. As I explain above in §V.C.1., every embodiment of Schaffer does require the third seal member 165. Indeed, Mr. Thornton's conclusion ignores that Schaffer expressly discusses the third central seal member 165 in combination with Figures 31-34 at, for example, paragraph [0081]. EX1005, ¶ [0081]. Accordingly, a POSITA would understand that seal module 100 in Figures 31-34 of Schaffer includes the third seal member 165 as I describe in detail above.

124. Fourth, Mr. Thornton alleges that "a person of ordinary skill in the art would have recognized that the 'sticky' or 'gelatinous' materials would not work well with the seal modules disclosed in Figures 31-34 because those seal modules must 'retract to an uncollapsed configuration' when the tension on the module is released by the actuating members … [a] seal module made of the 'sticky' or 'gelatinous' materials would not easily return to its uncollapsed configuration." EX1003, ¶ 100. To the contrary, a POSITA would understand Schaffer's U-shaped actuating members 55 to be rigid such that they "**forcibly disengage** opposing outer walls 27 of the seal module 100 allowing the portion 108 of the containment structure 160 to retract to an uncollapsed

configuration where gases and fluids can pass therethrough." EX1005, ¶ [0077] (emphasis added). That is, the seal module 100 can open with any of the disclosed materials because the actuating member 55 disengage the seal module 100 to remove all compressive force.

B. Petitioner and Its Expert Assert that Schaffer's Valve Forms a Complete Seal and Prevents Leaks, Even When Instruments are Inserted Therethrough.

125. As I explain in detail above in §VIII.A., Schaffer discloses that its valve seals completely with or without instruments inserted therethrough such that no gaps would form, and details the specific mechanisms and properties of its seal module that enable such complete sealing. Petitioner and its expert, Mr. Thornton, nevertheless assert that a POSITA would have been motivated to modify Schaffer or substitute Schaffer's U-shaped actuating members with Hartley's string or Eller's wire member to "seal more effectively" and avoid the formation of "small gaps." Petition, pp. 42, 50. Not only is this incorrect as I explain above, Petitioner and its expert concede at other times that Schaffer's valve forms a complete seal—even when instruments are inserted therethrough—contradicting Petitioner's stated reason to modify Schaffer concede at other times that Schaffer's valve forms a complete seal—even when instruments are inserted therethrough—contradicting Petitioner's stated reason to modify Schaffer.

126. For example, when describing how Schaffer discloses the preamble of Claim 1, Mr. Thornton states:

> Further, Schaffer's hemostasis valve is a part of a system that is inserted into the patient's vasculature, and the hemostasis valve helps prevent blood and air leaks in the device by "**block[ing] the flow of gas or fluid completely** and immediately **with or without an instrument in place** within the gas/fluid path." Ex. 1005 (Schaffer) at [0002], [0008]; see also Ex. 1009 (Schaffer '616) at Abstract, 1:1-9 (disclosing catheter systems for insertion into a blood vessel). Schaffer also discloses that its hemostasis valve can prevent leaks even when "a range of instruments," such as "a catheter, guidewire, needle, or fiber," are inserted through the valve. Ex. 1005 at [0056]. Thus, **a person of ordinary skill in the art would have reasonably expected that Schaffer's hemostasis valve could be used to prevent leaks around an aspiration catheter inserted through the valve**."

EX1003, ¶ 70. Accordingly, Mr. Thornton acknowledges, at least when it suits him, that Schaffer discloses that its valve completely seals with or without an instrument in place, and then goes on to state that a POSITA would have expected that Schaffer's valve could be used to prevent leaks around an instrument (aspiration catheter) inserted through the valve. This is completely contrary to Mr. Thornton's and Petitioner's stated motivations for substituting Schaffer's U-shaped actuating members with Hartley's string to "seal more effectively" and avoid the "form[ation] of small gaps." If a POSITA would have expected that Schaffer's valve would prevent leaks around an instrument inserted through the valve, a POSITA would not have understood that small gaps (i.e., leak paths) would form (Petitioner's stated motivation to combine

Hartley with Schaffer). That is, Petitioner's stated motivations including the formation of "gaps" are contradicted by Mr. Thornton's statements that Schaffer's valve prevents leaks (i.e., gaps) when an instrument is inserted through the valve.

127. Likewise, Petitioner states "the purpose of Schaffer's hemostasis valve is to prevent leaks when a catheter is inserted into a patient" (Petition, p. 80) and that Schaffer "discloses that its valve prevents leakage across 'a range of instruments,' such as 'a catheter, guidewire, needle, or fiber'" (Petition, p. 76 & 80; *see also* EX1003, ¶¶ 149 & 161). Again, a POSITA would have understood Schaffer's valve to prevent leaks around an instrument inserted through the valve, so a POSITA would not have understood that small gaps (i.e., leak paths) would form (Petitioner's stated motivation to combine Hartley with Schaffer).

128. Similarly, when describing how Schaffer discloses the "seal about the elongate, flexible tubular" recited in Claim 2, Petitioner states:

> Schaffer discloses that its valve "**blocks the flow of gas or fluid completely and** immediately with or without an instrument in place within the gas/fluid path." (Ex. 1005, [0008].) Schaffer also discloses that "a range of instruments [can be] used within the seal module," such as "a catheter, guidewire, needle, or fiber," and that "a guidewire and catheter may be placed into the same lumen 193 for extension into a body passage." (*Id.*, [0056], [0074].) Accordingly, **when Schaffer's valve is in the first, sealed position, the U-shaped actuating members "constrict[] the valve lumen to create a seal about the elongate, flexible**

> **tubular body" of a catheter inserted through the valve**. (Ex. 1003, ¶ 134.)

Petition, p. 64 (my emphasis added). Accordingly, Petitioner acknowledges that Schaffer discloses that its valve completely seals with or without an instrument in place, and then goes on to state that U-shaped actuated members would create a seal about a catheter inserted through the valve. This is completely contrary to Petitioner's stated motivations for substituting Schaffer's U-shaped actuating members with Hartley's string to "seal more effectively" and avoid the "form[ation] of small gaps." That is, Petitioner's stated motivations are contradicted by its own and Mr. Thornton's statements that Schaffer's valve blocks the flow of gas or fluid completely and forms a seal about a catheter inserted through the valve.

129. Below I provide a list of Petitioner's statements indicating the ability of Schaffer's valve to completely seal with or without instruments inserted therethrough (my emphasis added):

- "Schaffer discloses a hemostasis valve for use with catheters 'that **blocks the flow of gas or fluid completely** and immediately **with or without an instrument in place** within the gas/fluid path.' (Ex. 1005, [0002], [0008].)" (Petition, p. 22.)
- "As shown in Figure 32, **the valve lumen is completely sealed** in the first position. (*Id.*; *see also id.*, [0008] (disclosing Schaffer's valve

'**blocks the flow of gas or fluid completely** and immediately **with or without an instrument in place** within the gas/fluid path')." (Petition, p. 56.)

- "As shown in Figure 32, **the valve lumen is completely sealed** in the first position. (*Id*.; *see also id*., [0008] (disclosing Schaffer's valve '**blocks the flow of gas or fluid completely** and immediately **with or without an instrument in place** within the gas/fluid path')))." (Petition, p. 63.)
- "Schaffer discloses that its valve '**blocks the flow of gas or fluid completely** and immediately **with or without an instrument in place** within the gas/fluid path.' (Ex. 1005, [0008].) Schaffer also discloses that 'a range of instruments [can be] used within the seal module,' such as 'a catheter, guidewire, needle, or fiber,' and that 'a guidewire and catheter may be placed into the same lumen 193 for extension into a body passage.' (*Id*., [0056], [0074].) Accordingly, when Schaffer's valve is in the first, sealed position, the U-shaped actuating members 'constrict[] the valve lumen **to create a seal about the elongate, flexible tubular body' of a catheter inserted through the valve**. (Ex. 1003, ¶ 134.)" (Petition, p. 64.)

- Schaffer's hemostasis valve "**blocks the flow of gas or fluid completely** and immediately **with or without an instrument in place** within the gas/fluid path." (Ex. 1005, [0008].) "**Schaffer's valve is sealed** when the first and second actuators (i.e., buttons) are in the first position (i.e., undepressed)." (Petition, p. 69.)
- "Schaffer further discloses that **its valve prevents leakage across 'a range of instruments**,' such as 'a catheter, guidewire, needle, or fiber.' (Ex. 1005, [0056].)" (Petition, p. 76.)
- "POSITAs would have been motivated to do so because **the purpose of Schaffer's hemostasis valve is to prevent leaks when a catheter is inserted into a patient**, including aspiration catheters." (Petition, p. 80.)
- "Schaffer discloses that its hemostasis valve is 'for use with catheters' and provides 'a durable stasis valve **that blocks the flow of gas or fluid completely** and immediately **with or without an instrument in place within the gas/fluid path**. (Ex. 1005, [0002], [0008].)" (Petition, p. 91.)

130. Likewise, below I provide a list of Mr. Thornton's statements indicating the ability of Schaffer's valve to completely seal with or without instruments inserted therethrough (my emphasis added):

- "Schaffer discloses a hemostasis valve 'that **blocks the flow of gas or fluid completely** and immediately **with or without an instrument in place** within the gas/fluid path.' Ex. 1005 (Schaffer) at [0002], [0008]." (EX1003, ¶ 57.)
- "Further, Schaffer's hemostasis valve is a part of a system that is inserted into the patient's vasculature, and the hemostasis valve helps prevent blood and air leaks in the device by '**block[ing] the flow of gas or fluid completely** and immediately **with or without an instrument in place** within the gas/fluid path.' Ex. 1005 (Schaffer) at [0002], [0008]; see also Ex. 1009 (Schaffer '616) at Abstract, 1:1-9 (disclosing catheter systems for insertion into a blood vessel). Schaffer also discloses that its hemostasis valve can prevent leaks even when 'a range of instruments,' such as 'a catheter, guidewire, needle, or fiber,' are inserted through the valve. Ex. 1005 at [0056]. Thus, **a person of ordinary skill in the art would have reasonably expected that Schaffer's hemostasis valve could be used to prevent leaks around an aspiration catheter inserted through the valve**." (EX1003, ¶ 70.)
- "This position is depicted in Figure 32, which shows that the central lumen is **completely constricted and sealed** in the first position." (EX1003, ¶ 89.)

- "*See, e.g.*, Ex. 1005 (Schaffer) at [0008] (recognizing that 'what is needed is a durable stasis valve that **blocks the flow of gas or fluid completely** and immediately **with or without an instrument in place** within the gas/fluid path')." (EX1003, ¶ 98.)
- "As illustrated in Figure 32 above, the lumen of **Schaffer's valve is completely constricted and sealed** when the actuator buttons are in the first position. *Id*. This is consistent with Schaffer's disclosure that the valve '**blocks the flow of gas or fluid completely** and immediately **with or without an instrument in place** within the gas/fluid path.' *Id*. at [0008]." (EX1003, ¶ 124.)
- "As illustrated in Figure 32 above, the lumen of **Schaffer's valve is completely constricted and sealed** when the actuator buttons are in the first position. *Id*. This is consistent with Schaffer's disclosure that the valve '**blocks the flow of gas or fluid completely** and immediately **with or without an instrument in place** within the gas/fluid path.' *Id*. at [0008]." (EX1003, ¶ 133.)
- "Schaffer discloses that its hemostasis valve '**blocks the flow of gas or fluid completely** and immediately with or without an instrument in place within the gas/fluid path.' *Id*. at [0008]. Schaffer also discloses that 'a range of instruments [can be] used within the seal module,' such

as 'a catheter, guidewire, needle, or fiber,' and that 'a guidewire and catheter may be placed into the same lumen 193 for extension into a body passage.' *Id*. at [0056], [0074]. Therefore, **when Schaffer's valve is in the first, sealed position, the U-shaped actuating members would 'constrict[] the valve lumen to create a seal about the elongate, flexible tubular body' of a catheter inserted through the valve."** (EX1003, ¶ 135.)

- "Schaffer's hemostasis valve is intended for use with catheters inserted into a patient's blood vessels and '**blocks the flow of gas or fluid completely** and immediately **with or without an instrument in place** within the gas/fluid path' during those procedures. Ex. 1005 (Schaffer) [0008]." (EX1003, ¶ 146.)
- "Schaffer's disclosure that its valve is intended to '**block[] the flow of gas or fluid completely** and immediately' during intravascular procedures confirms that understanding, as do Schaffer's descriptions on the sealed state of the valve when the actuator buttons are in the first (undepressed) position. *Id*. at [0008], [0077]." (EX1003, ¶ 148.)
- "A person of ordinary skill in the art would have been motivated to do so because **the purpose of Schaffer's hemostasis valve is to prevent**

leakage when a catheter or medical device is inserted into a patient." (EX1003, ¶ 149.)

- "Schaffer also discloses that **its valve prevents leakage across 'a range of instruments,'** such as 'a catheter, guidewire, needle, or fiber.' Ex. 1005 (Schaffer) at [0056]." (EX1003, ¶ 161.)
- "Schaffer discloses that its hemostasis valve is intended 'for use with catheters' and provides 'a durable stasis valve that **blocks the flow of gas or fluid completely** and immediately **with or without an instrument in place** within the gas/fluid path.' Ex. 1005 (Schaffer) at [0002], [0008]." (EX1003, ¶ 191.)

C. Petitioner's Proposed Substitution of Hartley's String or Eller's Wire Member for Schaffer's U-Shaped Actuating Members is Not a Simple Substitution of One Known Element for Another.

131. A POSITA would not have found it obvious to have substituted Hartley's string or Eller's wire member for Schaffer's U-shaped actuating members because neither Schaffer, Hartley, nor Eller disclose a "filament" connected at opposite ends to two actuators as proposed in Petitioner's combination. That is, Petitioner's proposed combinations do not involve the substitution of a known element for another but, instead, a new construction that differs from the arrangements taught by Schaffer, Hartley, and Eller.

132. Petitioner contends that in its proposed combination the first end of Hartley's string would be secured to Schaffer's first actuator button, Hartley's string would wrap around Schaffer's seal module, and the second end of Hartley's string would be secured to Schaffer's second actuator button. Petition, pp. 42-46. Petitioner provides the following demonstrative illustration to illustrate the proposed substitution:

Demonstrative Illustration
Schaffer + Hartley's String

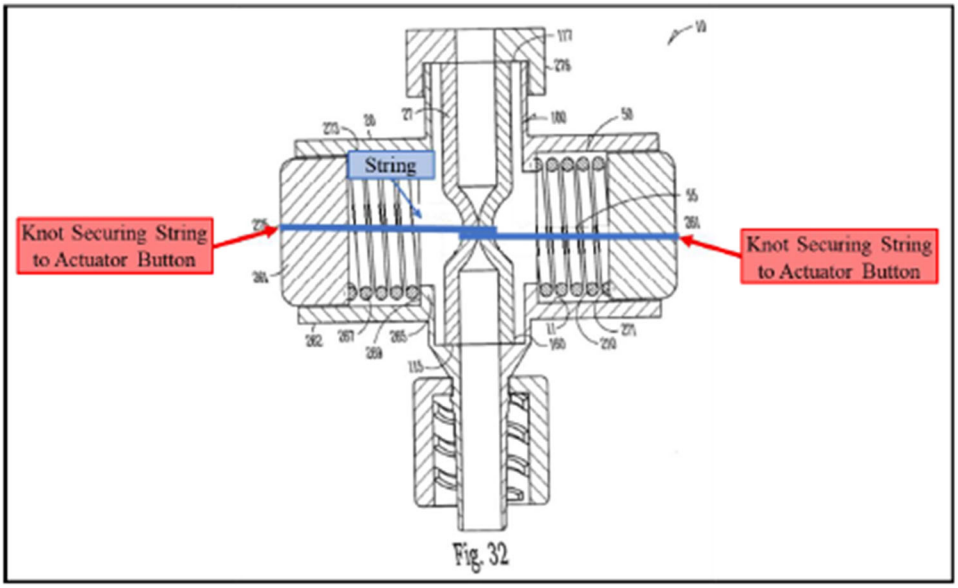

Id. at p. 44. Petitioner's proposed combination of Schaffer and Eller identically positions Eller's wire member to be attached at opposite ends to both actuator buttons of Schaffer and to loop around Schaffer's seal module:

Demonstrative Illustration
Schaffer + Eller's Wire Member

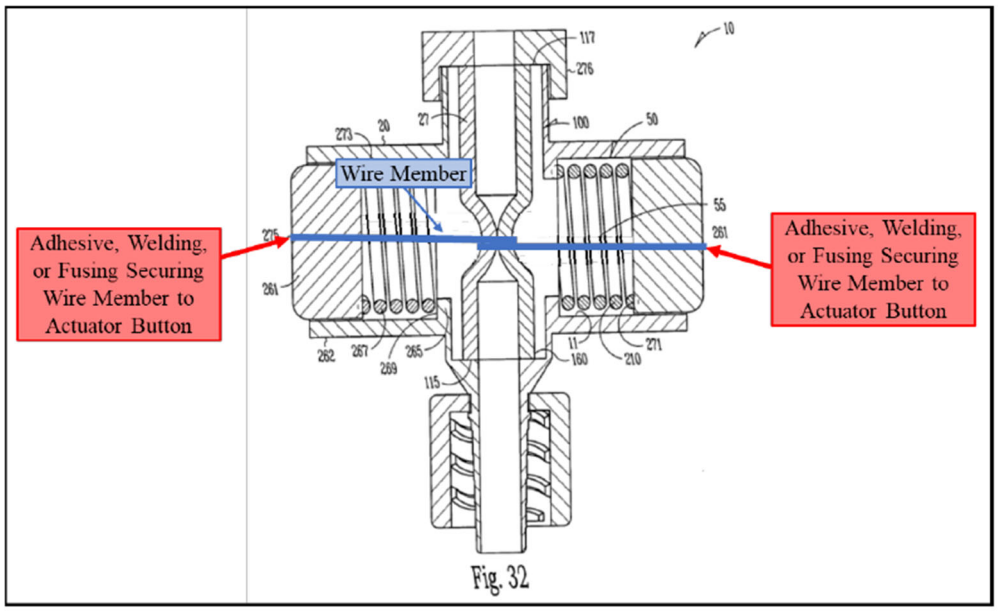

Id. at pp. 51-52.

133. Accordingly, Petitioner's proposed substitution requires eliminating the two U-shaped actuating members of Schaffer and replacing them with a single actuating member (Hartley's string or Eller's wire member) and attaching opposite ends of Hartley's string or Eller's wire member to the two different actuator buttons 261 of Schaffer. But neither Schaffer, Hartley, nor Eller disclose such an arrangement.

134. For example, in Schaffer each of the actuating members 55 is attached to only one of the actuator buttons 261 such that movement of a single one of the actuator buttons 261 controls movement of a single one of the actuating members 55:

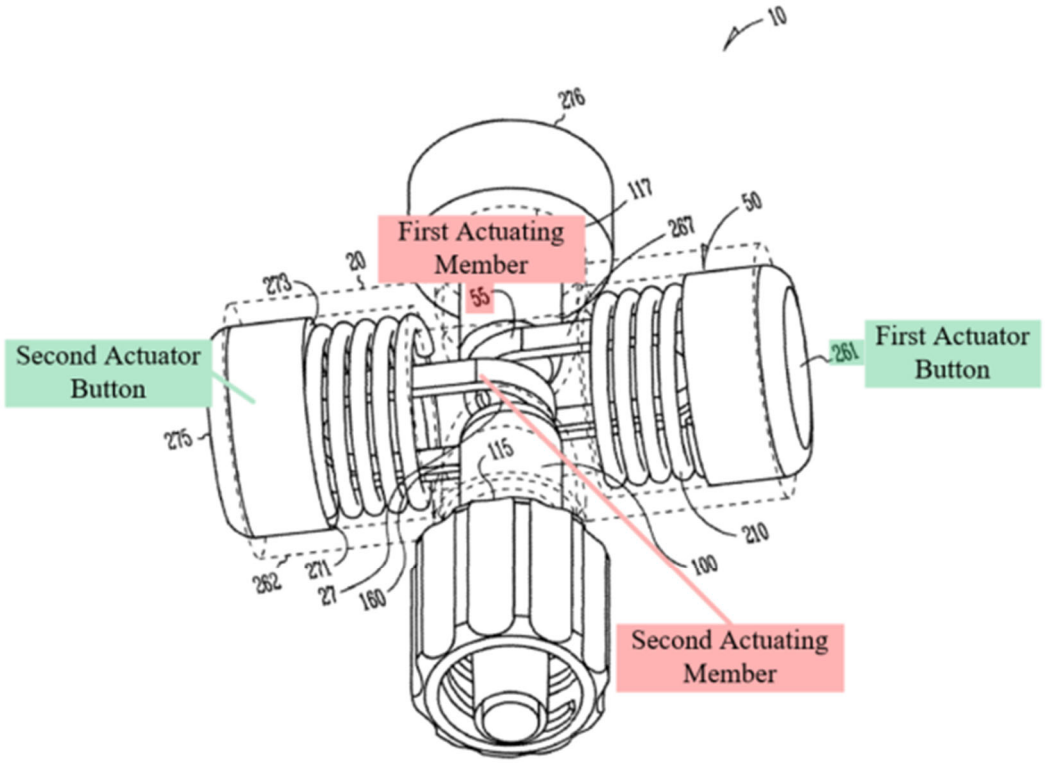

Fig. 31

135. Hartley discloses an access valve having a string 14 extending around a cylindrical elastomeric diaphragm 8 and attached by knots 16 and 18 at each end to a **single** rotary actuator 12 that controls movement of both ends of the string 14:

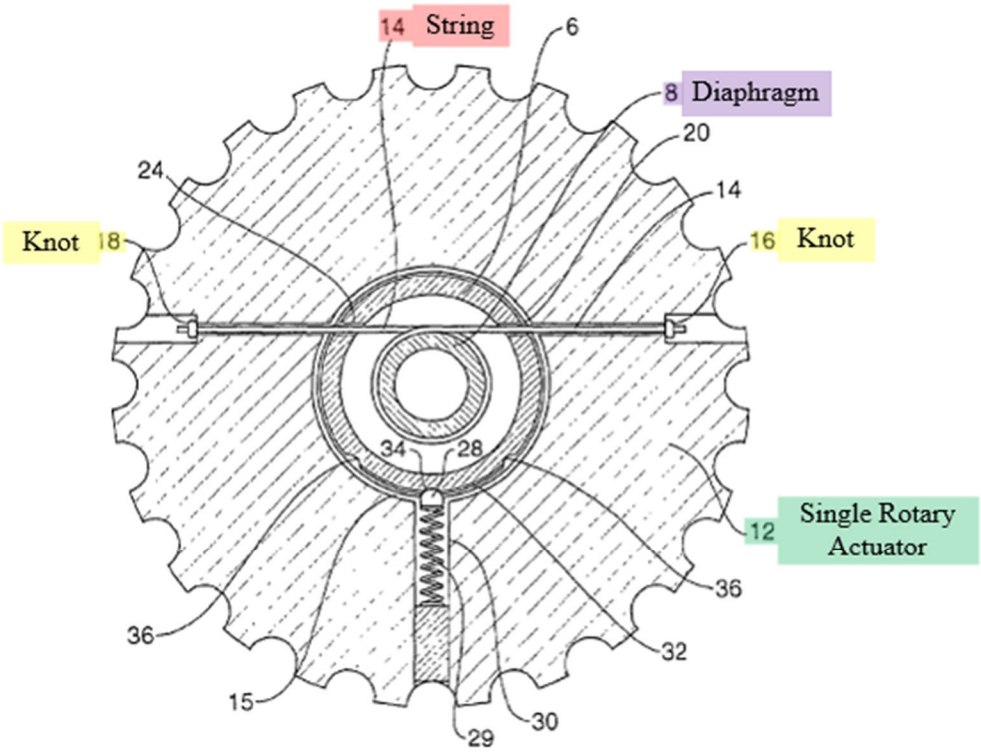

Fig 3

EX1006, ¶ [0031]. Rotation of the rotary actuator 12 pulls each end of the string 14 precisely the same amount. That is, movement of the string 14 is precisely controlled by the rotary actuator 12 such that the string 14 moves a predictable amount with movement of the actuator 12—neither end of the string 14 can move without the exact same and equal movement of the other end of the string 14.

136. Figures 1-10C of Eller illustrate a "selective fluid barrier valve device 10 that has … a housing 16, an actuator 18, a sleeve 20, a first wire member 22, a second wire member 24, [and] a third wire member 26:"

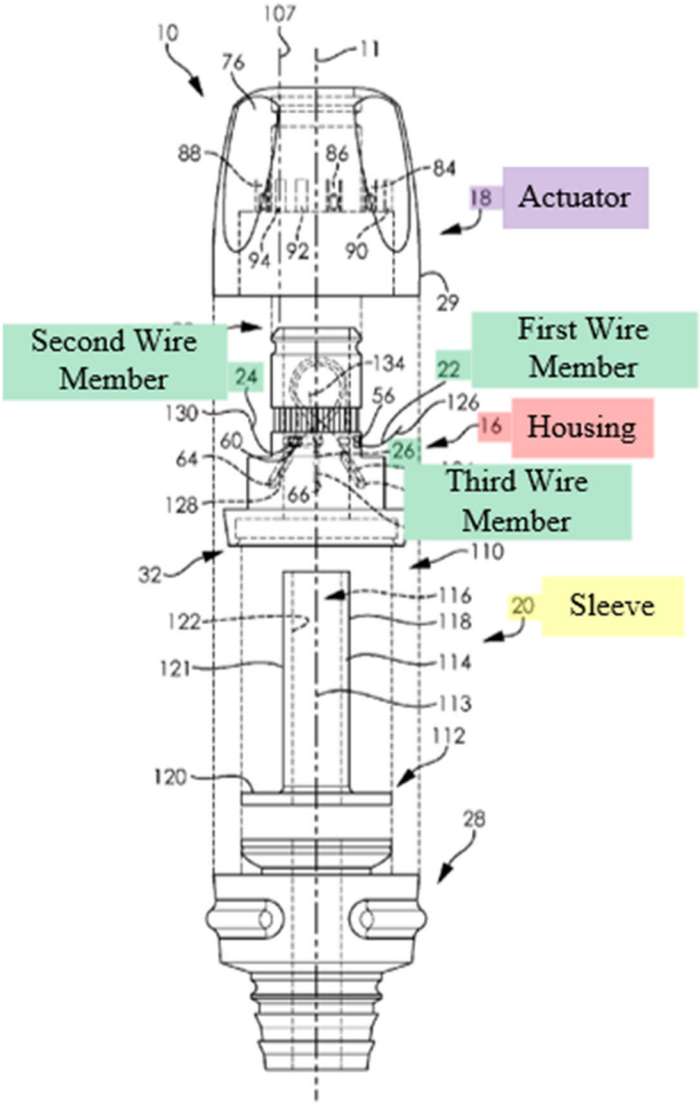

FIG. 2

EX1007, 5:2-6. As conceded by Petitioner, the "wire member has a first end 124 attached to the housing 16 and a second end 126 attached to the actuator 18." Petition, p. 48; EX1007:12:52-58. The second wire member 24 and the third wire member 26 likewise have a first end attaching to the housing 16 and a second end attached to the actuator 18. EX1007, 12:21-14:27. Rotation of the actuator 18 acts to pull the second end of each the first, second, and third

wire members 22, 24, and 26 to tension the wire members to compress the sleeve 20. *Id*. at 15:21-40 & 17:38-18:8.

137. Similarly, Figures 20-22 of Eller illustrate a selective fluid barrier device 810 including a housing 816, an actuator 818, a sleeve 820, and a single first wire member 822 having "a first end 924 attached to the housing 816 … and a second end 926 attached to the actuator 818":

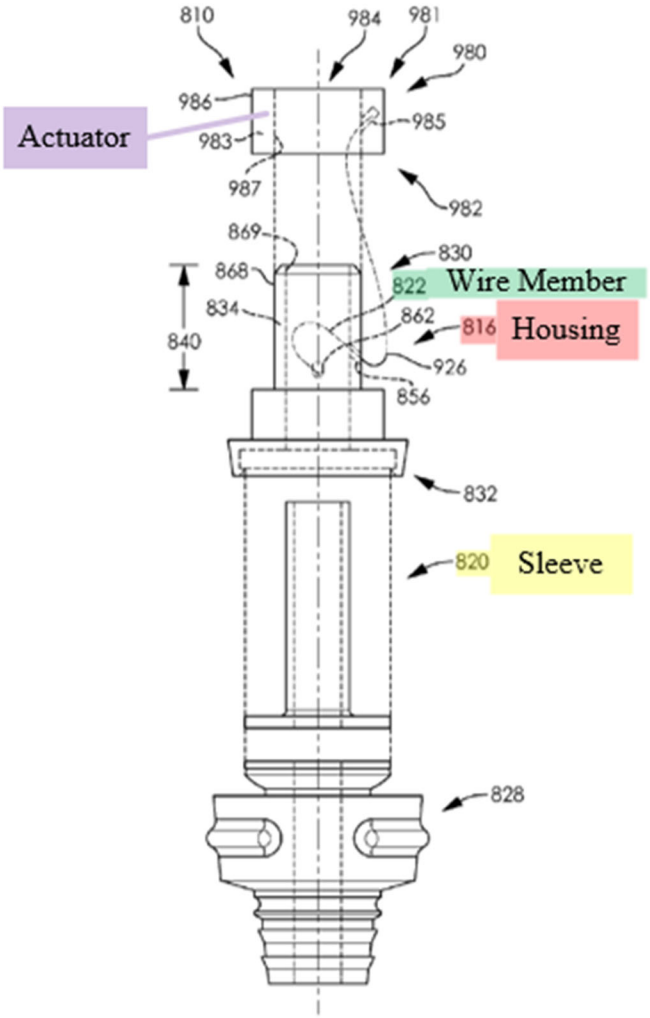

FIG. 20

Id. at 23:50-62 & 24:50-52. Movement of the actuator 818 pulls the second end 926 of the wire member 822 to tension the wire member 822 and compress the sleeve 820. *Id*. at 24:58-25:2.

138. Figures 15-17 illustrate a selective fluid barrier device 410 including a housing 416, an actuator 418, a sleeve 420, and a single first wire member 422 having "a first end 524 attached to the actuator 418 within the first cavity 490 and a second end 526 attached to the first wire member 422":

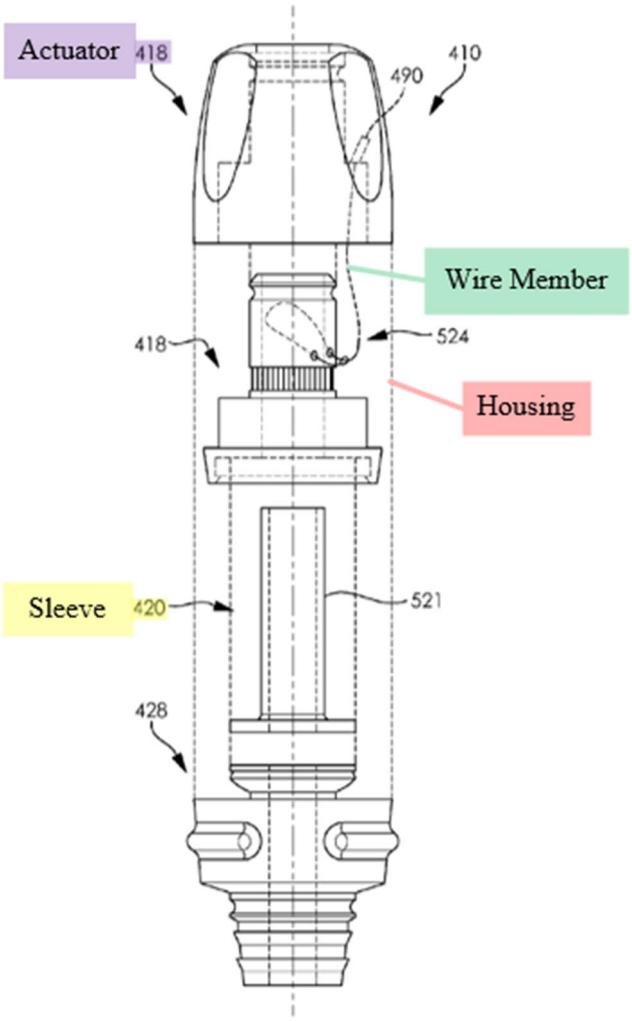

FIG. 15

Id. at 21:37-67. Rotation of the actuator 418 pulls the second end 526 of the wire member 422 to tension the wire member 422 and compress the sleeve 420. *Id*. at 22:25-31.

139. Thus, in each of Eller's various selective fluid barrier devices, the various wire members have a first end coupled to either a housing of the selective fluid barrier device or to the wire member and a second end coupled to an actuator of the selective fluid barrier device. Movement (e.g., rotation) of the actuator pulls only the second end of the wire member while the first end remains stationary to tension the wire member. That is, movement of the single actuator controls movement of the wire member such that the string moves predictably and a precise amount upon movement of the actuator.

140. While Petitioner proposes a purported simple substitution of Hartley's string or Eller's wire member for Schaffer's U-shaped actuating members, Petitioner's proposed combination not only substitutes a flexible string or wire member for Schaffer's rigid U-shaped members, but also redesigns Schaffer to eliminate one rigid U-shaped member completely and instead attach a single flexible string/wire member to two actuator buttons, an arrangement not found in Schaffer, Hartley, or Eller. Moreover, in Petitioner's proposed combinations of Schaffer and Hartley or Eller, Hartley's string and Eller's wire

member would be controlled by Schaffer's two actuator buttons 261—rather than by a single actuator as taught by Hartley or Eller.

141. Accordingly, it is incorrect that the "combination of Hartley's string and Schaffer's valve would have merely entailed substitution of one known element (Hartley's string) for another (Schaffer's actuating members) to yield the predictable result of constricting Schaffer's valve to form a seal" or that the "combination of Eller's wire member and Schaffer's valve would have merely entailed substitution of one known element (Eller's wire member) for another (Schaffer's actuating members) to yield the predictable results of constricting Schaffer's valve." Petition pp. 42, 50. Instead, Petitioner's proposed combination requires significant additional modification and departs from the intended purpose and express disclosure of each of Schaffer, Hartley, and Eller in which a **single** U-shaped actuating member 55, string 14, or wire member, respectively, are controlled by a **single** actuator. A POSITA would understand that controlling a string, wire member, or actuating member with two independently movable actuators would increase the complexity and variability of the valve and make the valve more difficult to manufacture. Accordingly, neither Schaffer, Hartley, nor Eller disclose any element (U-shaped actuator, string, or wire member) coupled to separate, individually controlled actuator buttons as in Petitioner's proposed combination. If anything,

Petitioner's proposed combinations appear to be based on hindsight in view of the '012 Patent.

142. I understand that the Board contends that "Schaffer's two actuating members apply a constricting force to the valve's seal module when pulled by opposing spring-actuated buttons," and that "replacing those members with a single string (or wire) would provide substantially the same function." Institution Decision, p. 39. However, even if it were true that Petitioner's proposed combination would provide "substantially the same function" as Schaffer's valve seal module, this alone does not mean that it would have been simple to redesign Schaffer's valve to accommodate Hartley's string or Eller's wire member. This is because there are many design considerations that a POSITA would need to contemplate if they had been motivated to redesign Schaffer's valve seal module. As I explain infra in §VIII.D.-E, several of these design considerations—including the durability of the valve and the ease of manufacturing the valve—mean that it would **not** have been simple to have redesigned Schaffer's valve to accommodate Hartley's string or Eller's wire member. This is not to say that no modification could be made to Schaffer. For example, as I explain infra in §VIII.F., there are **simple** modifications that a POSITA could make to Schaffer that could resolve Petitioner's alleged shortcomings of Schaffer—but these simple modifications do not include

incorporating Hartley's string or Eller's wire member into Schaffer's valve seal module.

D. Modifying or Substituting Hartley's String or Eller's Wire Member for Schaffer's U-Shaped Actuating Members Would Render Schaffer's Valve Inoperable for Its Intended Purposes of Durability and Easy Manufacturing.

143. It also would not have been obvious to a POSITA to substitute Hartley's string or Eller's wire member for Schaffer's U-shaped actuating members because doing so would make Schaffer's valve less durable and more difficult to manufacture. In particular, Schaffer's U-shaped actuating members 55 are purposefully designed to be rigid and attached to only a single actuator to simplify manufacturing and make the valve durable.

144. Regarding manufacturability, Petitioner contends that in its proposed combination the first end of the Hartley's string or Eller's wire member would be secured to Schaffer's first actuator button, the string would wrap at least once around Schaffer's seal module, and the second end of the string or wire member would be secured to the second actuator button. Petition, pp. 44, 52 (Petitioner's Demonstrative Illustrations showing the proposed combination of Schaffer and Hartley and Schaffer and Eller, respectively). As Petitioner explains, "small holes could be made in each of Schaffer's actuator buttons, and each end of the string could be threaded through the hole and knotted on the

other side." *Id*. at 44. This purported arrangement is speculative and would remove the advantages Schaffer identifies its structure as providing.

145. Schaffer specifically describes how its stasis valve is assembled:

> [T]he stasis valve 10 is assembled by inserting the actuator button 261 and resilient member 267 (e.g., spring 210) into one side of the housing 20. The actuator button 261 and resilient member 267 (e.g., spring 210) are inserted into an opposing side of the housing 20. Each actuator button 261 is completely compressed and held while the seal module 100 is inserted through the housing 20 and between each actuator 50. Each actuator button is released and the cap 276 secured to the housing 20, for example, with an adhesive. Further, the connecting member 35 is snapped onto the housing.

EX1005, ¶ [0083]. That is, a POSITA would understand that each of the actuator buttons 261 and the springs 210 are inserted into the cylindrical opening defined by a corresponding one of the cylindrical interior walls 11 of the housing 20 until the springs 210 abut the inner flange wall 265, then the actuator buttons 261 are depressed to form an opening through the U-shaped actuating members 55, and finally the seal module 100 is inserted through the opening:

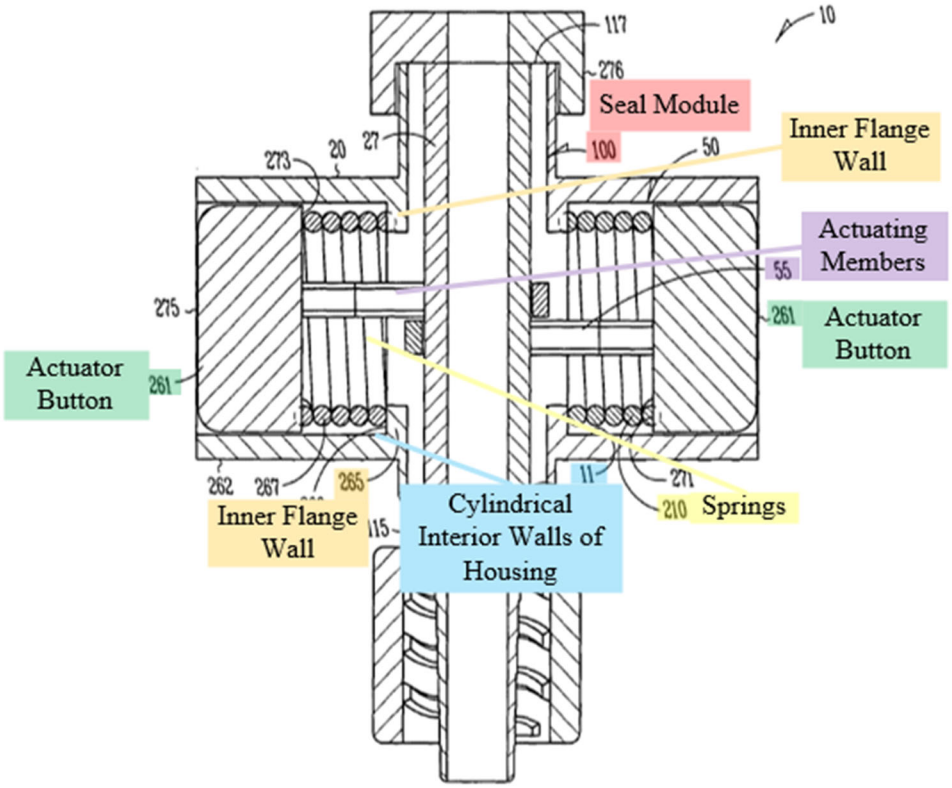

Fig. 34

Thereafter, the actuator buttons 261 and the actuating members 55 are retained within the cylindrical openings—even when the actuator buttons 261 are not depressed—by the resistive force of the seal module 100 against the U-shaped actuating members 55.

146. A POSITA would understand that Petitioner's proposed substitution of Hartley's string or Eller's wire member for Schaffer's actuating members 55 would make it more difficult to assemble Schaffer's valve in the simple manner taught by Schaffer using rigid actuating members 55. In particular, in Petitioner's proposed combination of Schaffer and Hartley, the first end of

Hartley's string is secured via a knot to one of Schaffer's actuator buttons 261 and the second end of Hartley's string is secured via a knot to the other one of Schaffer's actuator buttons 261. Petition, p. 44. Similarly, in Petitioner's proposed combination of Schaffer and Eller, the first end of Eller's wire member is secured via "simple methods" such as adhesive, welding, or fusing to one of Schaffer's actuator buttons, and the second end of Eller's wire member is secured via a similar method to the other one of Schaffer's actuator buttons 261. Petition, p. 51. A POSITA would understand that to achieve this arrangement Hartley's string or Eller's wire member would either need to be (1) secured to the actuator buttons 261 before the actuator buttons 261 are inserted into the cylindrical openings in the housing 20 or (2) secured to the actuator buttons 261 after the actuator buttons 261 are inserted into the cylindrical openings.

147. However, the first method of assembly in which Hartley's string or Eller's wire member is secured to the actuator buttons 261 before their assembly into the valve would not be possible because the tethered actuator buttons 261 could not be inserted through the respective cylindrical openings on either side of the housing 20 while also positioning Hartley's string or Eller's wire member as alleged by Petitioner. Put differently, the inner flange wall 265 would prevent either of Schaffer's actuator buttons 261 from passing entirely

through the housing 20 as would be required to position Hartley's string or Eller's wire member around Schaffer's seal module 100 in Petitioner's combination.

148. Likewise, a POSITA would understand the second method of assembly in which Hartley's string or Eller's wire member is secured to the actuator buttons 261 after their assembly into the valve to be unduly difficult, because the housing 20 and the actuator buttons 261 would block access to the interior of the housing 20 and inhibit or even prevent the positioning of Hartley's string or Eller's wire member in Petitioner's combinations. That is, with the actuator buttons 261 inserted into the cylindrical openings in the housing 20, the interior of the housing 20 would be inaccessible for manipulating Hartley's string or Eller's wire member into position around the seal module 100.

149. Even if the first or second method of assembly was somehow workable, Schaffer teaches that the "[e]ach actuator button 261 is completely compressed and held while the seal module 100 is inserted through the housing 20 and between each actuator 50." EX1005, ¶ [0083]. Hartley's flexible string and Eller's flexible wire member would be not tensioned (e.g., loose) when the actuator buttons 261 are compressed in Petitioner's proposed combinations such that it would not provide a uniform opening like Schaffer's rigid

actuating members 55 to permit positioning of the seal module 100 therethrough.

150. Petitioner's expert asserts that "a tapered fixture could be used to introduce the seal module through the looped strings that are already attached to the buttons" or "[a]lternatively, the seal module could be positioned in the valve and the strings could be looped around the module and connected to the buttons." EX1003, ¶ 87. The inherent floppiness/flexibility of the string would render its relaxed geometry uncontrollable, resulting in non-orthogonal positioning around the seal module. And, even if these methods were possible, Schaffer does not disclose such methods further confirming that the U-shaped members are rigid. However, if a looped string were attached to the actuator buttons before the seal module was inserted, nothing would retain the loop in the string. Instead, because the string is flexible, the string would simply slacken in an uncontrolled manner and there would be no "loop" to target with the tapered fixture. And even if there was some way to ensure the loop was maintained, the loop would not have a predefined position that could be targeted by the tapered fixture. Rather, the looped string would move in an uncontrolled manner that would make it exceedingly difficult to reliability insert a tapered fixture therethrough.

151. In sum, a POSITA would recognize the advantage of Schaffer's design when it comes to ease of assembly. Namely, each of the actuator buttons 261 is attached to a single one of the actuating members 55 to allow these individual components to be inserted into the cylindrical openings on either side of the housing 20. Tethering the actuator buttons 261 together with Hartley's string or Eller's wire member would unduly complicate this simple assembly process.

152. Accordingly, for the foregoing reasons, a POSITA would understand that Petitioner's proposed substitution of Hartley's string or Eller's wire member for Schaffer's actuating members 55 would make it much more difficult or even impossible to assemble Schaffer's valve in the simple manner taught by Schaffer.

153. Moreover, as I explain in §VI.A. above, a POSITA would understand that flexible parts—such as Hartley's string or Eller's wire member—would be difficult or impossible to machine conventionally, as flexible materials will deform when force is applied during the machining process. This would inhibit or even prevent accurate manufacturing of Hartley's string or Eller's wire member using machining as taught by Schaffer. Accordingly, a POSITA would understand that replacing Schaffer's actuating members with Hartley's

string or Eller's wire member would make Schaffer unsuitable for its intended purpose of simple manufacturability via machining.

154. Regarding durability, Schaffer explains that its invention addresses the then-existing need for "a **durable stasis valve** that blocks the flow of gas or fluid completely and immediately with or without an instrument in place within the gas/fluid path." EX1005, ¶ [0008] (emphasis added). Accordingly, a POSITA would understand durability, such as the ability to resist damage during operation, is a key feature of Schaffer's device. As I explain in §VI.A. above, Schaffer's actuating members 55 are rigid and "machined from aluminum" or "machined from plastic." *Id*. at ¶ [0082]. A POSITA would understand that replacing Schaffer's actuating members 55 with Hartley's string 14 or Eller's wire member would make Schaffer's valve less durable—in direct contrast to Schaffer's intended purpose of having a durable valve. In particular, a POSITA would understand Hartley's thin and flexible string and Eller's thin and flexible wire member to be much more susceptible to damage, positioning errors, and the like during valve operation.

E. Modifying or Substituting Hartley's String or Eller's Wire Member for Schaffer's U-Shaped Actuating Members Would Change the Principle of Operation of Schaffer's Valve in Which the U-

Shaped Actuating Members Forcibly Disengage the Seal Module and Likely Render Schaffer's Valve Inoperable.

155. It also would not have been obvious to a POSITA to substitute Hartley's string or Eller's wire member for Schaffer's U-shaped actuating members because doing so would change the stated principle of operation of Schaffer's valve in which the U-shaped actuating members 55 forcibly disengage the seal module 100.

156. In the second (open) position of Schaffer's valve, "each actuator button 261 is depressed" and "[s]uch movement allows each engaged actuating member 55 to **forcibly disengage** opposing outer walls 27 of the seal module 100 allowing the portion 108 of the containment structure 160 to retract to an uncollapsed configuration where gases and fluids can pass therethrough":

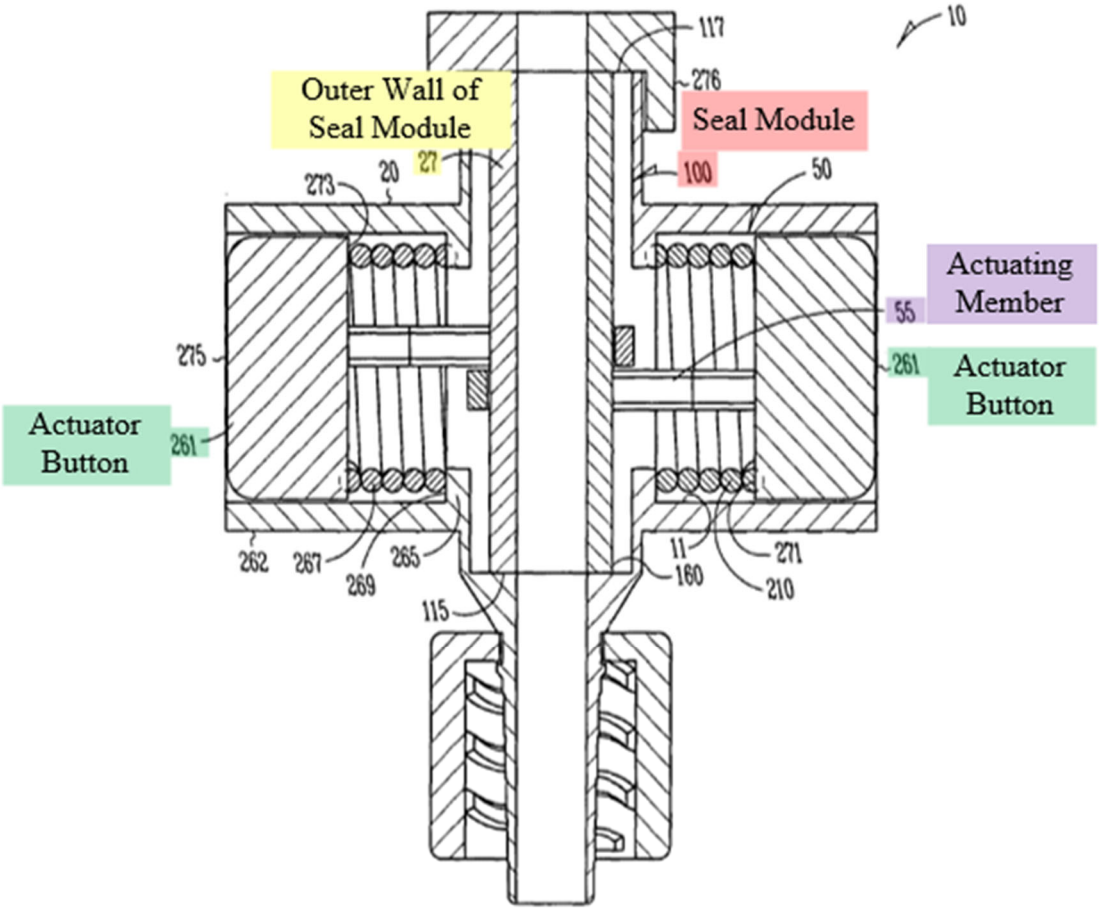

Fig. 34

EX1005, ¶ [0077] (emphasis added). Petitioner explains that in their proffered combination Hartley's string or Eller's wire member would wrap around Schaffer's seal module. Petition, pp. 44, 51. As explained by Petitioner with regard to Hartley, the seal module 100 would expand against Hartley's string to open when tension is released on the string: "pressing Schaffer's buttons inwardly (i.e., second position) would release the tension on the string, causing the string to loosen around the seal module and allowing the lumen to open." *Id*. at p. 46. Petitioner provides a similar explanation for Eller:

"[w]hen Schaffer's actuator buttons are pressed inwardly, the tension on the wire member would be relaxed, causing the wire member to loosen" permitting Schaffer's seal module "to at least partially open." *Id.* at pp. 53. Thus, Hartley's string or Eller's wire member would never disengage—let alone forcibly disengage—Schaffer's seal module 100. That is, Hartley's string or Eller's wire member would remain in contact with and never disengage the seal module 100. Accordingly, a POSITA would understand that substituting Hartley's string or Eller's wire member for Schaffer's U-shaped actuating members 55 would cause the actuating member (i.e., Hartley's string or Eller's wire member) not to disengage or forcibly disengage Schaffer's seal module, changing the principle of operation of Schaffer's device.

157. Further, a POSITA would recognize that the ability for Schaffer's U-shaped actuating members to forcibly (i.e., actively) disengage from the seal module is a key aspect of Schaffer's design because it is part of Schaffer's solution for "balanc[ing] between closing force, opening force, friction, compression and durability." EX1005, ¶[0007]. Specifically, Schaffer's design with forcible disengage promotes strong closing forces while maintaining the ability to easily open the valve and insert "flexible instrumentation" through the valve. *Id.*

F. Even Assuming Petitioner's Stated Motivations to Form a Better Seal and Avoid the Formation of Gaps, Petitioner Does Not

Explain Why a POSITA Would Have been Motivated to Substitute Hartley's String for Schaffer's U-Shaped Members as Opposed to Any of the Alternatives It Provides.

158. Even assuming that a POSITA would understand Schaffer's valve to form gaps (they would not), a POSITA would not have been motivated to substitute Hartley's string or Eller's wire member for Schaffer's U-shaped actuating members to have both its ends attached to different actuator buttons (which neither Schaffer, Hartley, nor Eller disclose as I explain in §VIII.C. above) as suggested by Petitioner. Rather, a POSITA would make the relatively simple modifications to Schaffer's valve that Petitioner suggests. For example, when describing how Schaffer allegedly discloses the features of dependent Claim 5, Petitioner recites that a POSITA would have been motivated to adjust Schaffer's valve in several simple manners to improve/maintain its seal with a reasonable expectation of success. For example, Petitioner states:

> [I]f Schaffer's valve did not maintain its seal when a pressure differential exists, POSITAs would have found it obvious to make adjustments to the valve to maintain the seal, **including adjusting Schaffer's spring strength to apply additional force, adjusting the resilience and compressibility of the seal module that forms the valve's lumen .** . . POSITAs would have been motivated to adjust Schaffer's hemostasis valve to prevent blood leaks because that is the valve's purpose. (Ex. 1003, ¶149.)

Petition, p. 71 (emphasis added).

159. I agree that a POSITA would understand that some simple adjustments to Schaffer that would not change its principles of operation could rectify any

alleged deficiencies, but that is another reason why a POSITA would not make the wholesale substitutions and modifications proposed by Petitioner that would contradict Schaffer's principle of operation. For example, the spring strength could be adjusted while maintaining the same manufacturing method disclosed by Schaffer, forcible disengagement of the U-shaped members from the seal module, and durability of the valve. Likewise, even if the "sticky," "self-closing," and "gelatinous" properties of the seal member 165 described in paragraph [0059] of Schaffer were considered optional, a POSITA would understand exactly how to make the seal member 165 have those properties to address any sealing issues by, for example, forming the seal member 165 of "commonly available [materials such] as 'C-Flex' or 'Kraton' in the range of 5 to 15 (shore A)," thereby maintain Schaffer's principles of operation. EX1005, ¶ [0059]. Accordingly, even assuming that Schaffer's valve would not form a complete seal around an instrument—it would—Petitioner asserts that a POSITA would have understood that the seal could have been improved by simply adjusting Schaffer's spring strength or adjusting the properties of the seal module. A POSITA would understand those modifications to be simpler and more likely to work than completely omitting Schaffer's U-shaped members and substituting in Hartley's string or Eller's wire member as proposed by Petitioner (including attaching the string or wire member to two

separate actuators which neither Schaffer, Hartley, nor Eller disclose). Petitioner provides no explanation for why a POSITA would have substituted Hartley's string or Eller's wire member for Schaffer's U-shaped members rather than make any of the simple modifications they assert would work to complete the seal and prevent blood leaks through the valve.

160. And, a POSITA would not have modified Schaffer in view of Hartley or Eller instead of, if somehow needed (they are not), making the simple changes identified above. As I explain in §§VIII.D.-E. above, substituting Hartley's string or Eller's wire member for Schaffer's U-shaped members would likely render Schaffer's valve inoperable for its intended purpose of durability, easy manufacturing, and forcible disengagement. The simple modifications that Petitioner asserts a POSITA would understand would work to complete Schaffer's seal would not require a complete redesign of Schaffer's valve in a manner that significantly reduces durability and ease of manufacturing and eliminates forcible disengagement of the actuating members from the seal module.

G. Altogether a POSITA Would Not Have Been Motivated to Substitute Hartley's String for Schaffer's U-Shaped Members

161. Referring to my explanations in §§VIII.A-F. above, in sum a POSITA would not have been motivated to substitute Hartley's string or Eller's wire member for Schaffer's U-shaped actuating members. For example, under a proper reading of Schaffer, Hartley, and Eller:

(1) Schaffer's seal module 100 "blocks the flow of gas or fluid completely" with or without instruments placed therein (§§VIII.A.-B.);

(2) Schaffer discloses a highly-compliant seal member 165 in every embodiment that forms a complete seal around a variety of profile shapes and diameters of the lumen, around small instruments, around large instruments, in the absence of instruments, and even around irregularly shaped instruments (§VIII.A.);

(3) Petitioner and its expert assert that a POSITA could simply adjust Schaffer's spring strength and/or adjust the properties of the seal module to address any sealing issues, if any, in Schaffer (§VIII.F.);

(4) Petitioner's proposed substitutions are not a simple substitution of a known element because neither Schaffer, Hartley, nor Eller disclose a "filament" connected at opposite ends to and controlled by two actuators as proposed in Petitioner's combination (§§VIII.C.);

(5) Substituting Hartley's string or Eller's wire member for Schaffer's U-shaped actuating members would fundamentally change Schaffer's principles of operation (§VIII.D.-E.); and

(6) Hartley's string and Eller's wire member would not provide a better seal than Schaffer's rigid U-shaped actuating members and seal module (§§VIII.A.-B.).

162. A POSITA would thus not have modified or substituted Hartley's string or Eller's wire member and further modified the structure to connect the string or wire member to two separate actuators, as Petitioner contends. Petitioner's combination is a valve that operates in complete contrast to Schaffer's stated purposes—one in which (1) the actuating members (i.e., Hartley's string or Eller's wire member) are controlled by multiple rather than one of the actuator buttons 261, (2) the seal module 100 does not form a complete seal despite every embodiment of Schaffer disclosing a seal member 165 that is highly-compliant to form a seal around different tools, and (3) the string or wire member does not forcibly disengage the seal module 100. The proposed combination is such a stark departure from the principles of operation of Schaffer's valve that a POSITA would not have been motivated to arrive at Petitioner's purported combination.

IX. GROUNDS 5-7—THE COMBINATIONS OF SCHAFFER AND GARRISON OR SCHAFFER, GARRISON, AND HARTLEY OR ELLER DO NOT RENDER CLAIM 1 OBVIOUS

163. Petitioner and its expert, Mr. Thornton, allege that Schaffer in combination with Garrison, Garrison and Hartley, or Garrison and Eller as discussed with respect to grounds 1-4 renders obvious Claim 1 of the ’012 patent. Petitioner relies on Garrison for allegedly disclosing the term “aspiration” in the preamble of Claim 1, the “tubular body” of Claim 1, and the “hemostasis valve of” of Claim 1, but does not rely on Garrison for disclosing the “constricting mechanism” of Claim 1 that I discuss in detail with regard to grounds 1–4 above. Petition, pp. 83-94.

164. Because of the deficiencies of Schaffer, Hartley, and Eller I explain above with reference to grounds 1-4, I do not analyze the details of Garrison. Nevertheless, I reserve my right to further review and assess any independent reasons of patentability for the claims in view of Garrison.

X. SECONDARY CONSIDERATIONS

165. I have not rendered any opinions on secondary considerations of non-obviousness at this time, but reserve the right to analyze evidence of secondary considerations at a later stage, if asked to do so.

XI. CONCLUSION

166. For all the above reasons, it is my opinion that the claims of the '012 Patent are not invalid based on the prior art grounds asserted by Petitioner and Mr. Thorton.

I, Paul J. Zalesky, declare that all statements made herein of my knowledge are true, and that all statements made on information and belief are believed to be true, and that these statements were made with the knowledge that willful false statements and the like so made are punishable by fine or imprisonment, or both, under Section 1001 of Title 18 of the United States Code.

Respectfully submitted,

Dated: July 15, 2025

By: _____
Paul J. Zalesky

ATTACHMENT 1

Paul J Zalesky, PhD
124 Gilbert Stuart Dr
East Greenwich, RI 02818
mobile: 714-585-2423
e-mail : pauljzalesky@gmail.com

Summary of Experience: All aspects of medical specialty Product Development and commercialization, emphasizing technological bases and IP management

June 2012 to Present: *Consultant to multiple medical technology companies and legal practices*; Contract CEO for Envisage Medical to develop the Product Development program and raise capital with Research Triangle Institute for a real-time image guidance of structural and rhythm heart procedures; acting VP Bus Dev for Israeli percutaneous mitral valve, management of development with clinical/regulatory strategy; Board member and Key Consultant for China-based BioVention, a drug-eluting stent company; acting CEO for Device Sanitation start-up emphasizing design, development, and commercialization; *Expert Consultant or Witness* to attorney clients and private companies, emphasizing underlying medical technology (cardiovascular emphasis), clinical/regulatory strategies & plans, associated patent validity or infringement, patient injury and associated company liability; medical device product development and commercialization – all aspects.

Mar 2011 to June 2012: Interim *CEO, Keystone Heart, Inc.*: Product Design & Development, pre-clinical, and clinical study, regulatory submission planning and execution for cerebral protection during heart valve repair, in collaboration with international CV Surgeons and Cardiologists. Direct management of Clinical Research Org and Regulatory personnel towards CE Mark and FDA submissions as part of managing all operations.

Feb 2009 to Mar 2011: *Consultant, SVMI, Inc., Accumed, Inc, other start-ups and Investment Institutions:* Product Development plans, Business Development, Financing, FDA and other regulatory body strategy planning, and Intellectual Property Planning and protection. Perform technical due diligence on novel medical technologies towards financial institution investing.

June 2007 to Feb 2009: *Vice President, R&D, Volcano Corporation (now Philips)* Manage all aspects of Product Development, New Technology, and Intellectual Property for this public company with revenues exceeding $ 200 MM in Interventional Cardiology; produce numerous pre-market document packages for FDA review and dialog

Sept 2004 to Present: Consultant, Board Member, Consulting Expert:
Round Table Group Scholar program; *Consulting Expert Witness; Medical Specialty Consultant*: advise legal counsel, representing BSC, on multiple patent-related and technical and practical aspects.

The Battelle Institute: advise on key organization changes and recommended practices.

IVIT, Inc.: acting CEO for a Vascular Access company developing technology for chronic hemodialysis patients, emphasizing design for least invasive vascular procedures and fast regulatory approval path

CryoCath, Inc.: mentor VP R&D and technical staff for an electrophysiology / cardiology company seeking fast time-to-market for devices for least invasive treatment of cardiac arrhythmias, with emphasis on atrial fibrillation (subsequently acquired by Medtronic).

Biovention, Inc.: direct, via Board position, strategy, product development and clinical/regulatory path for this novel, heparin-additive, drug-eluting coronary stent company; negotiate M&A with multi-national companies.

Multiple Companies, Investors and Legal Counsel: analyze and advise, in consulting capacity, on multiple Product Development programs for wireless cardiovascular implants, in vitro diagnostics, aorta implants for aneurysm treatment, non-vascular applications of intravascular imaging, and gastroenterological least invasive therapies; enable specialized contract developers / manufacturers to drive selected aspects of product development for expediency; collaborate with key consultants and employees on clinical & regulatory strategies and plans; provide expert consulting for broad-based health care institutions and retained legal counsel. Provide to legal counsel expert opinions / reports on medical device patent cases involving validity and/or infringement; appear for court testimony and depositions associated with numerous patent cases.

Sept 2003 to April 2005: *President & CEO, LumeRx, Inc*.: managed all aspects of this development stage company focused on light-based therapy in Gastroenterology, with emphasis on design and development of therapeutic product; raised $ 7 MM private equity financing; recruited and managed key technical staff , consultants and contract organizations for Clinical/Regulatory/Quality and Marketing.

August 2003 to December 2006: *Consultant CTO, TherOx, Inc.:* consulting continuity with emphasis on new product development, business development, new financing support, and clinical/regulatory strategies for this multiple opportunity company; continued Board of Directors activities; manage focused development programs for interventional cardiology, cardiovascular surgery, cancer therapy, wound and skin care, and GI therapies.

May 2001 to August 2003: *Chief Technical Officer, TherOx, Inc.:* identified and managed multiple cardiovascular business opportunities, as well as core product development and manufacturing, with associated novel designs and development paths, emphasizing CV Surgery and intra-PTCA alternatives for hyperbaric Oxygenation solution technology, specialty wound care therapy, and selected oncology therapies using vascular administration; managed all aspects of Intellectual Property.

June 1994 to May 2001: *President and Co-founder, TherOx, Inc.:* managed all Product Development and operating aspects of this start-up, integrating a hardware/software bedside system with disposable catheters, focusing on 1)Acute MI, 2) skin & wound care, 3) cancer therapy; raised more than $ 52 MM in private capital with KPCB as lead investor; recruited initial 45 employees in all operating functions, achieved multiple FDA and CE Mark approvals, established clean room manufacturing of disposables and electromechanical control + delivery systems, directed extensive, multi-phase clinical studies in US and Europe, established and maintained opinion-leading SAB, and recruited key international technology consultants for breakthrough developments; directed development and management of all intellectual property (primarily patents).

May 1991 to June 1994: *VP R&D, Baxter Bentley*: managed all product development, advanced manufacturing, clinical, and related technical support aspects for this cardiopulmonary bypass company with $ 150 MM annual revenue; served as group R&D and strategic planning representative for all Cardiovascular Group divisions with $ 900 MM annual revenue base to enable key growth and diversification strategies, with emphasis on interventional cardiology; coordinated use of selected Baxter corporate capabilities to achieve operating efficiencies; interacted with FDA on critical programs.

May 1986 to March 1990: *President & Co-founder, InterTherapy, Inc.:* managed all aspects of this start-up focused on the design and development of intracoronary ultrasound for interventional cardiology; raised more than $ 11 MM venture capital; organized SAB and Clinical Investigator array with opinion-leading Interventional Cardiologists in the US and Europe; accomplished rapid FDA approval for marketing, ISO certification, and aggressive early marketing with pilot in-house manufacturing capability; managed Intellectual Property development.
(was merged with CVIS, then acquired by BSC).

Previous experience included Executive R&D management positions with Johnson & Johnson, Edwards Labs, and Meadox Medicals, and a Special Expert position for the National Institutes of Health. Additionally, served 3 years of active duty as a Captain in the USAF, performing cardiopulmonary research with human subjects for development of life support systems for high performance aircraft.

Education

PhD, Univ. of Michigan, Biomedical Engineering - NIH pre-doctoral fellow
M.S., Univ. of Michigan, Aerospace Engineering – NSF fellow
B.S., Univ. of Notre Dame, Aerospace Engineering – USAF Scholarship

Publications and Patents

Lead or co-author of approximately 20 articles in medical and research journals, encompassing cardiovascular technology and devices, bench and animal model tests on new technologies for heart-related diagnosis and therapy, and clinical (patient) studies on new devices and procedures.

Representative Publications:

"Intravascular Ultrasonic imaging", Texas Heart Institute Journal, 1990

"Intravascular Ultrasound imaging of Human Coronary Arteries In Vivo: Analysis of Tissue Characterization with Comparison to In Vitro Histological Specimens", Circulation, 1991

"A New Bioabsorbable Intravascular Stent: In Vitro Assessment of Hemodynamic and Morphometric Characteristics:, J of Interv Cardiol, 1992

"Topical Oxygen Emulsion – A Novel Wound Therapy", Arch Dermatol, 2007

"The effect of a topical Oxygen emulsion on granulation tissue formation in second degree burn wound healing", Ostomy Wound Management, 2004

Co-inventor on more than 16 US and International patents, encompassing intravascular ultrasound, coronary and cerebrovascular catheters and guidewires, electromechanical imaging and control systems, next generation cardiopulmonary bypass systems, Oxygen supersaturated solutions' preparation and vascular delivery, and photodynamic therapy devices and systems.

Representative Patents:

US 4,841,977 - 1989 – "Ultra-thin acoustic transducer and balloon catheter using same in imaging array subassembly:

US 5,115,814 – 1992 – "Intravascular ultrasonic imaging probe and method of using same"

US 5,976,119 – 1999 – "High pressure perfusion device"

US 6,123,698 – 2000 – "Angioscopy apparatus and methods"

US 6,235,007 – 2001 – "Atraumatic fluid delivery device"

US 6,248,087 – 2001 – "Apparatus for generalized extracorporeal support"

US 6,454,997 – 2002 – "Apparatus for the preparation and delivery of gas-enriched fluids"

US 6,558,501 B2 – 2003 – "Method for forming atraumatic fluid delivery device"

US 6,596,235 B2 – 2003 – "Method for blood oxygenator"

US 6,613,280 – 2005 – "Disposable cartridge for producing gas-enriched fluids"

US 6,974,435 – 2005 – “Method for enriching a bodily fluid with gas”

US 6,676,800 B1 – 2004 – “Method of for preparation and delivery of gas-enriched fluids”

US 6,607,698 B1 – 2003 – “Method for generalized extracorporeal support”

US 7,468,191 B2 – 2008 – “Method of preparing gas delivering perfluorocarbon emulsions with non-fluorinated surfactants”

US 7,357,937 B2 – 2008 – “Perfluorocarbon emulsion with non-fluorinated surfactants”

US 7,820,102 – 2010 – “Disposable cartridge for producing gas-enriched fluids”

US 4,899,756 – 1990 – “Ultrasonic imaging probe with zero dead space”

US 7,135,034 – 2006 – “Flexible array”

US 7,261,730 – 2007 – “Phototherapy device and system”

US 7,449,026 – 2008 – Intra-cavity catheters and methods of use”

Personal

Married with four children

Other

During the past 5 years (2015 – 2020), testified in depositions and court settings regarding specialized medical technologies and various aspects of their commercialization. Examples:

- Multiple appearances in front of arbitration judges regarding a tissue harvesting product, its development and commercialization
- Deposition regarding an algorithm for detecting heart rhythm disturbances
- Deposition regarding a cardiac pacemaker and reported patient injuries and deaths
- Court testimony to FTC officials regarding product attributes and performance claims

In addition, I have produced and delivered several formal reports to legal counsel and affected 3rd parties (insurance arbiters, for example) regarding serious patient injury resulting from the professional use of medical devices.

ATTACHMENT 2

MATERIALS CONSIDERED

EXHIBIT/PAPER NO.	DESCRIPTION
EX1001	U.S. Patent No. 11,697,012 ("the '012 Patent")
EX1002	'012 Patent Prosecution History Excerpts
EX1003	Expert Declaration of Troy Thornton
EX1004	Resume of Troy Thornton
EX1005	U.S. Patent Publication US 2003/0225379 A1 to Schaffer et al. ("Schaffer")
EX1006	U.S. Patent Publication US 2003/0116731 A1 to Hartley ("Hartley")
EX1007	U.S. Patent No. 9,980,813 B1 to Eller ("Eller")
EX1008	Drawings Submitted During Prosecution of U.S. Patent Application No. 10/371,190
EX1009	U.S. Patent No. 5,429,616 to Schaffer ("Schaffer '616")
EX1010	U.S. Patent Publication US 2011/0144592 A1 to Wong et al. ("Wong")
EX1011	U.S. Patent Publication US 2015/0173782 A1 to Garrison et al. ("Garrison")
EX1012	U.S. Patent No. 9,216,277 B2 to Myers ("Myers")
EX1013	Dorland's Illustrated Medical Dictionary, 32nd ed. (2012) - Definition of "Catheter"
EX1014	U.S. Patent No. 4,723,550 to Bales et al.
EX1015	U.S. Patent No. 5,895,376 to Schwartz et al.
EX1016	U.S. Patent No. 12,109,384 B2 to Merritt et al.
Paper 2	Petition for *Inter Partes* Review
Paper 6	Institution Decision: DECISION Granting Institution of Inter Partes Review 35 U.S.C. § 314
EX2002	Merriam-Webster's Collegiate Dictionary (11th ed. 2014)

EXHIBIT/PAPER NO.	DESCRIPTION
EX2003	New Oxford American Dictionary (3rd ed. 2010)
EX2004	U.S. Patent Application Publication No. 2018/0193043
EX2005	Deposition Transcript of Troy Thornton (September 30, 2024)
EX2006	Deposition Transcript of Troy Thornton (March 19, 2025)
EX2007	Deposition Transcript of Troy Thornton (June 25, 2025)