US 20110250928A1

(19) United States

(12) Patent Application Publication

(10) Pub. No.: US 2011/0250928 A1

(43) Pub. Date: Oct. 13, 2011

Schlub et al.

(54) ADJUSTABLE WIRELESS CIRCUITRY WITH ANTENNA-BASED PROXIMITY DETECTOR

(76) Inventors: **Robert W. Schlub**, Cupertino, CA (US); **Ruben Caballero**, San Jose, CA (US)

(21) Appl. No.: **12/759,243**

(22) Filed: **Apr. 13, 2010**

Publication Classification

(51) **Int. Cl.**

H04B 17/00	(2006.01)
H04W 88/02	(2009.01)
H04B 1/38	(2006.01)

(52) **U.S. Cl.** **455/550.1**; 455/115.1; 455/73

(57) **ABSTRACT**

An electronic device such as a portable electronic device has wireless communications circuitry. Antennas in the electronic device may be used in transmitting radio-frequency antenna signals. A coupler and antenna signal phase and magnitude measurement circuitry may be used to determine when external objects are in the vicinity of the antenna by making antenna impedance measurements. In-band and out-of-band phase and magnitude signal measurements may be made in determining whether external objects are present. Additional sensors such as motion sensors, light and heat sensors, acoustic and electrical sensors may produce data that can be combined with the proximity data gathered using the antenna-based proximity sensor. In response to detecting that an external object such as a user's body is within a given distance of the antenna, the electronic device may reduce transmit powers, switch antennas, steer a phased antenna array, switch communications protocols, or take other actions.

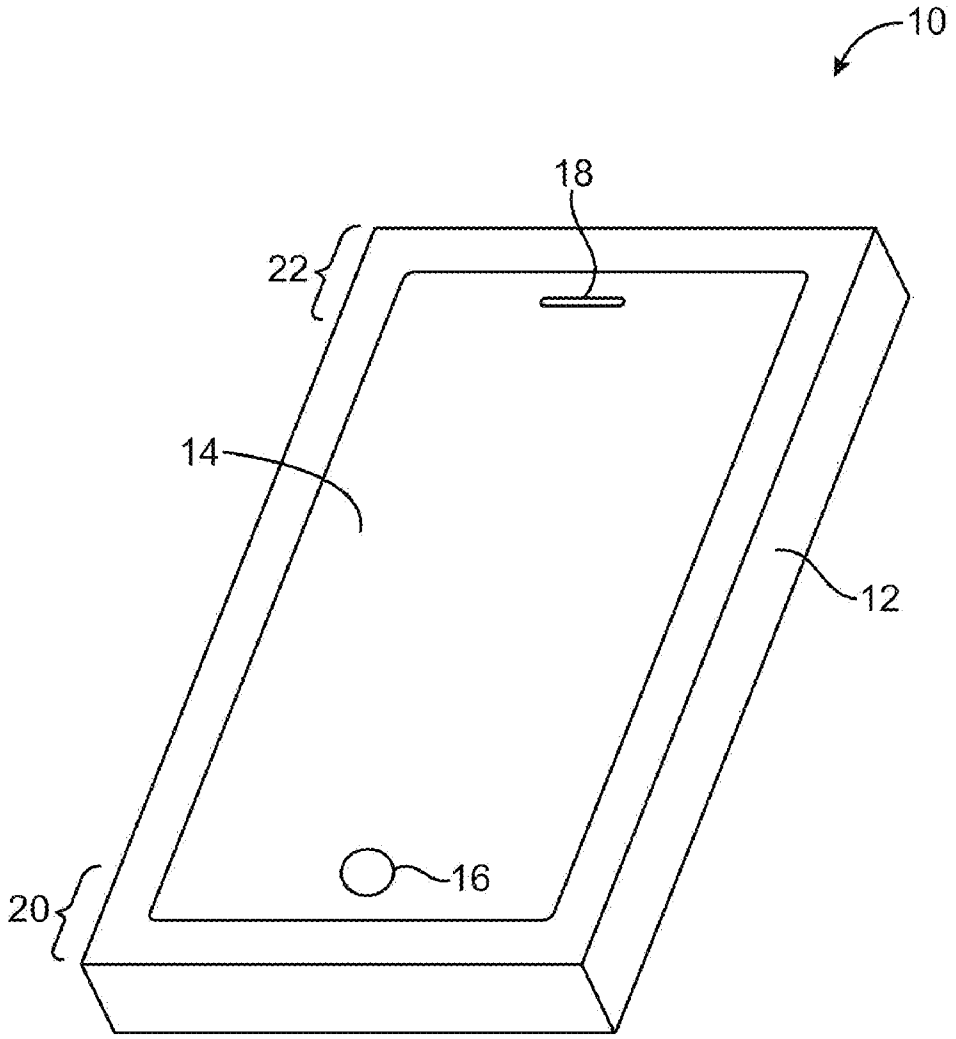

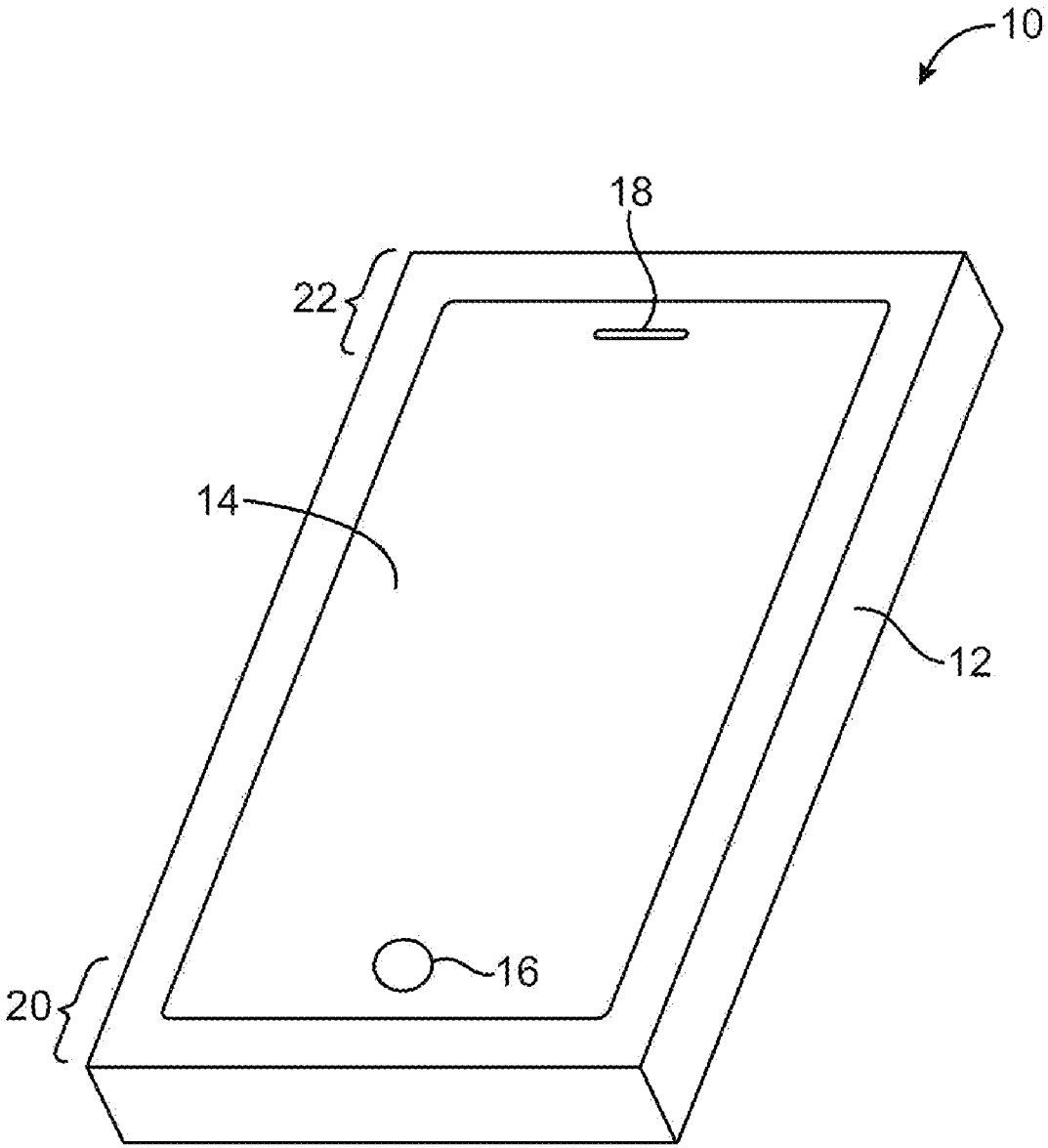

FIG. 1

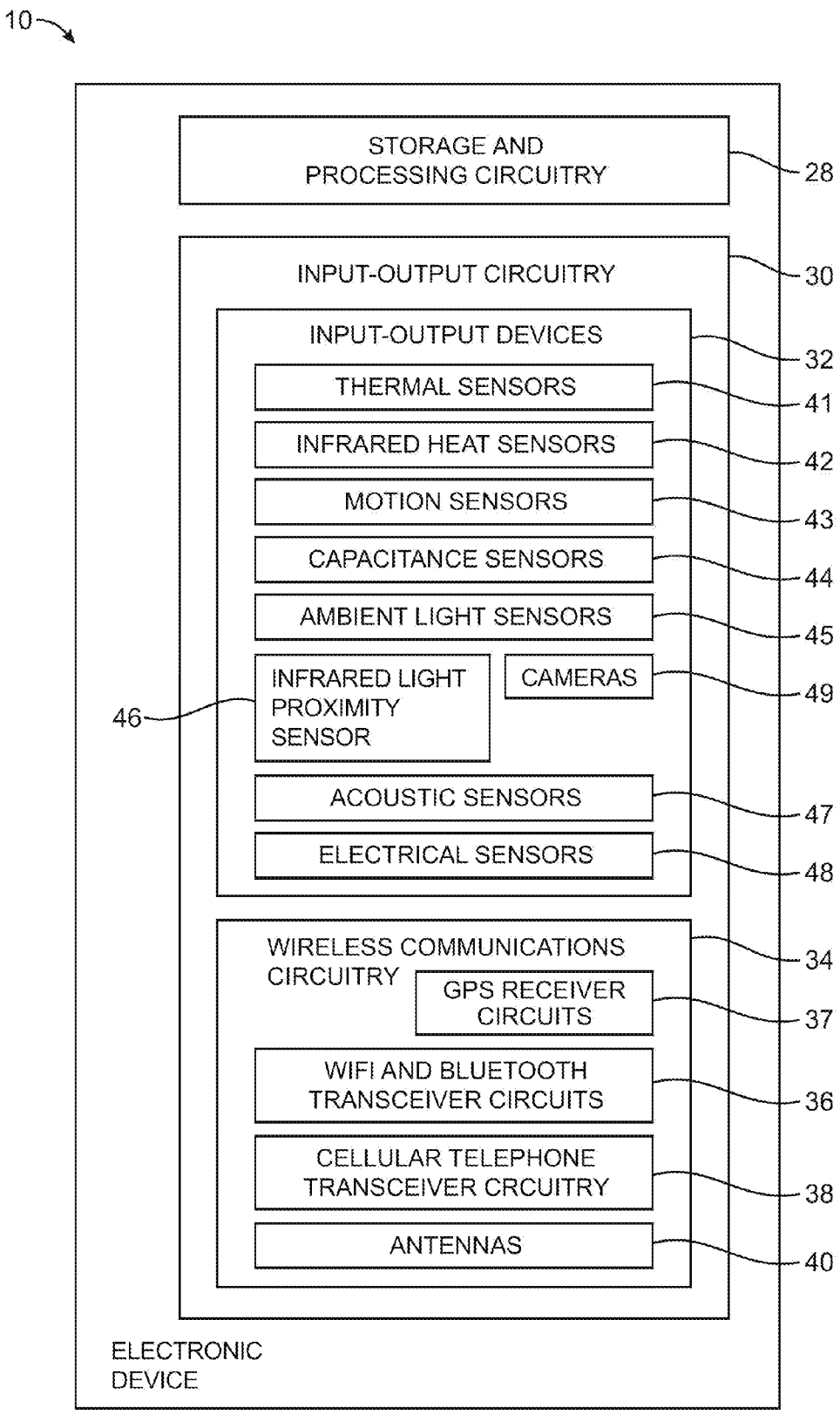
10
STORAGE AND PROCESSING CIRCUITRY
28
INPUT-OUTPUT CIRCUITRY
30
INPUT-OUTPUT DEVICES
32
THERMAL SENSORS
41
INFRARED HEAT SENSORS
42
MOTION SENSORS
43
CAPACITANCE SENSORS
44
AMBIENT LIGHT SENSORS
45
INFRARED LIGHT PROXIMITY SENSOR
46
CAMERAS
49
ACOUSTIC SENSORS
47
ELECTRICAL SENSORS
48
WIRELESS COMMUNICATIONS CIRCUITRY
34
GPS RECEIVER CIRCUITS
37
WIFI AND BLUETOOTH TRANSCEIVER CIRCUITS
36
CELLULAR TELEPHONE TRANSCEIVER CRCUITRY
38
ANTENNAS
40
ELECTRONIC DEVICE

FIG. 2

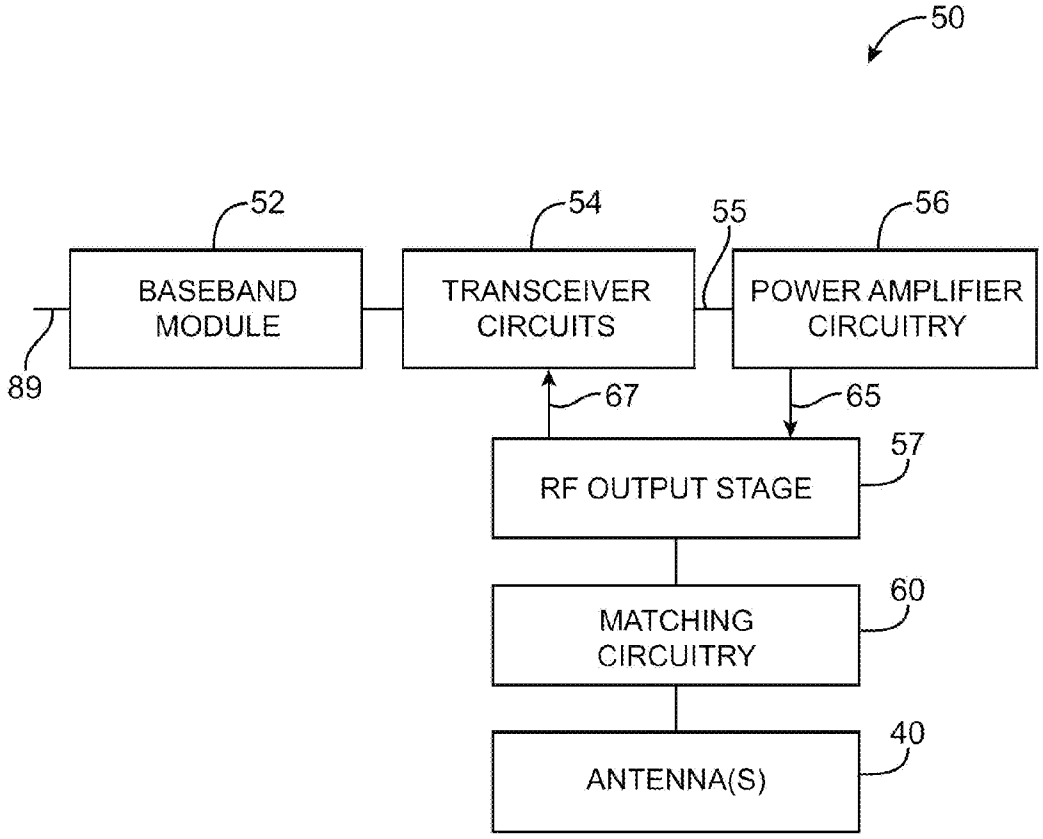
50
52
54
55
56
BASEBAND MODULE
TRANSCEIVER CIRCUITS
POWER AMPLIFIER CIRCUITRY
89
67
65
57
RF OUTPUT STAGE
60
MATCHING CIRCUITRY
40
ANTENNA(S)

FIG. 3

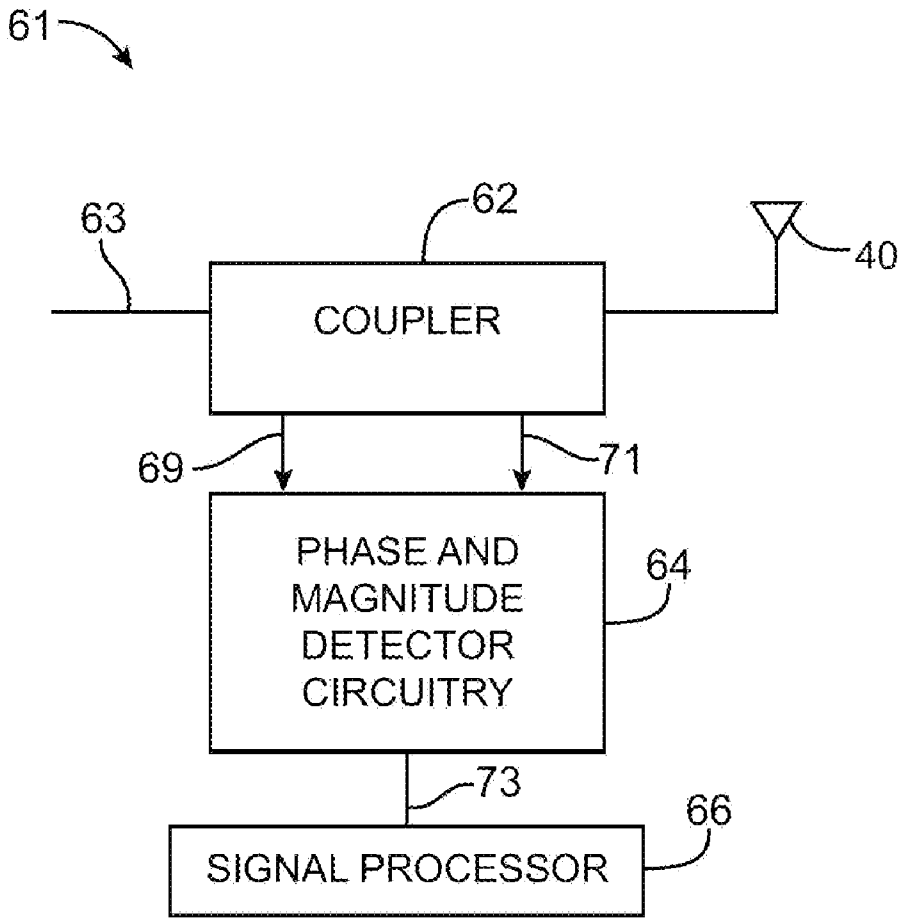
61
63
62
40
COUPLER
69
71
PHASE AND
MAGNITUDE
DETECTOR
CIRCUITRY
64
73
66
SIGNAL PROCESSOR

FIG. 4

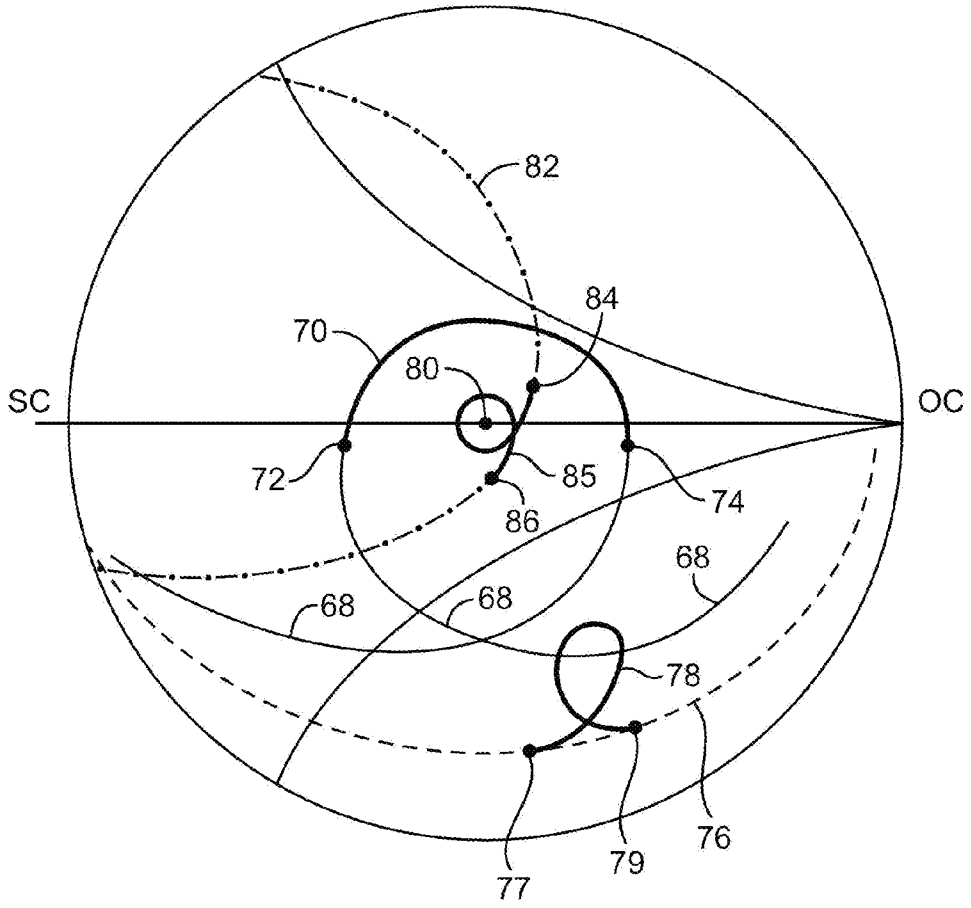

FIG. 5

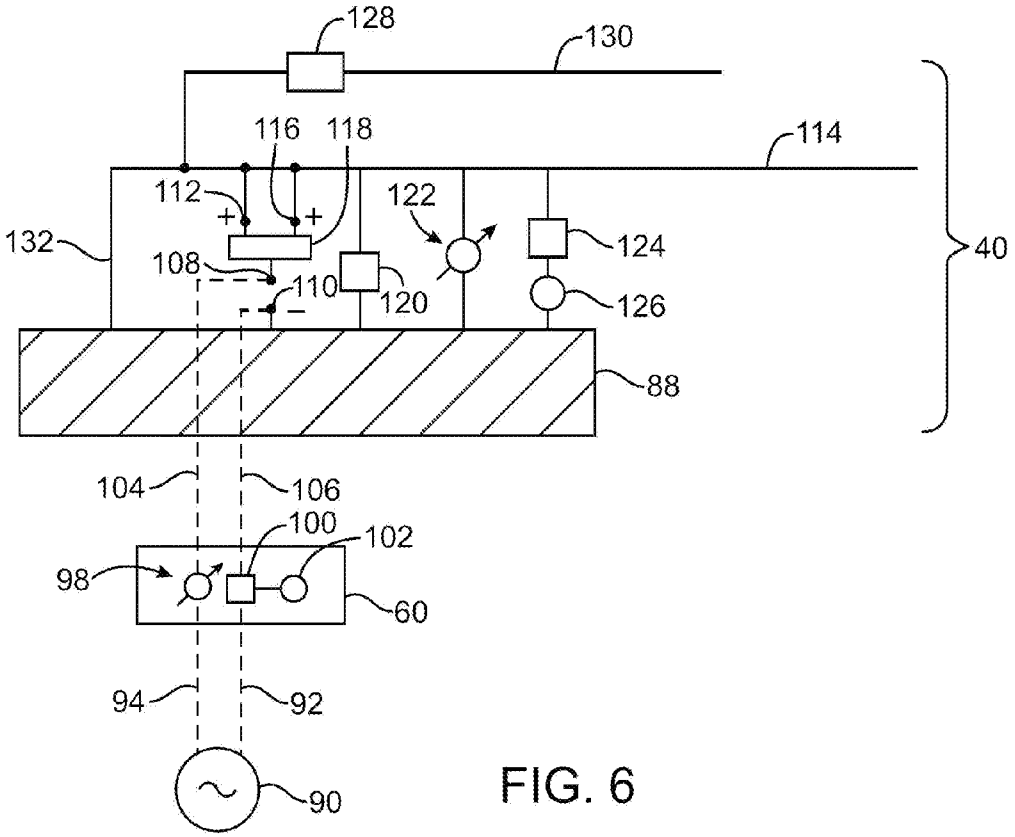
128
130
116
118
114
112
122
132
124
40
108
110
120
126
88
104
106
100
102
98
60
94
92
90

FIG. 6

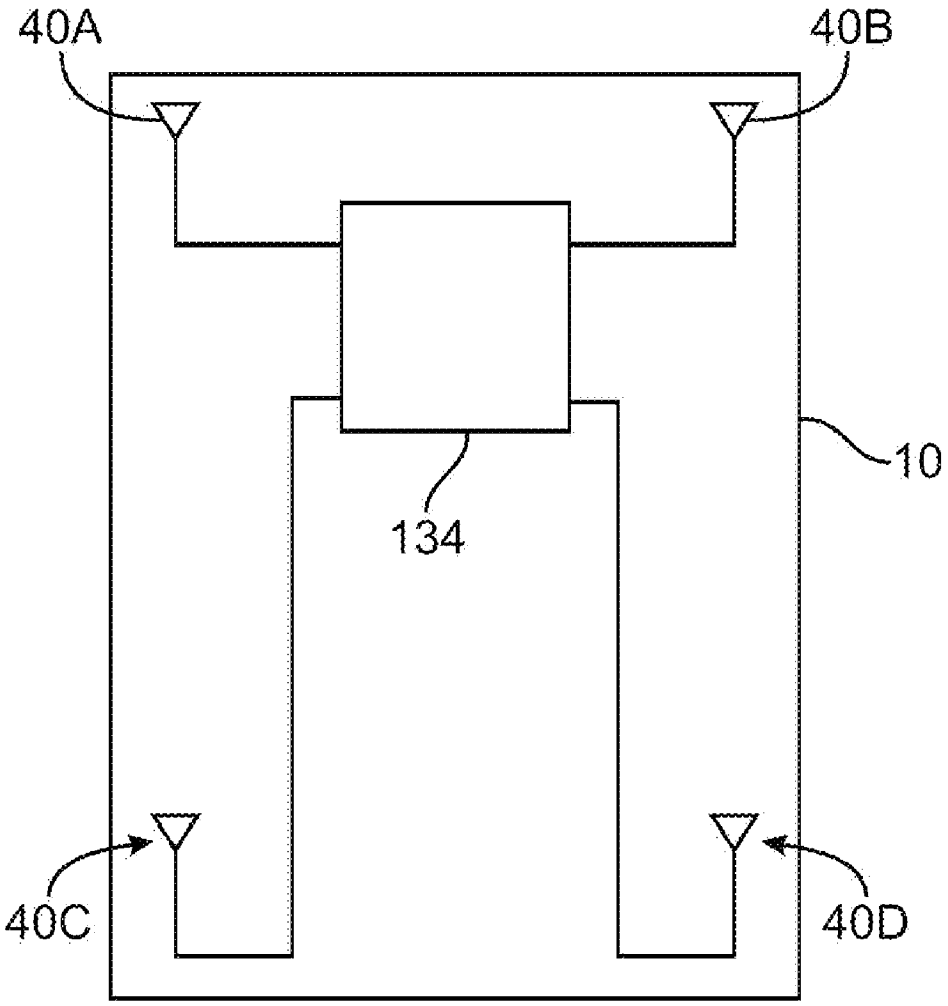

FIG. 7

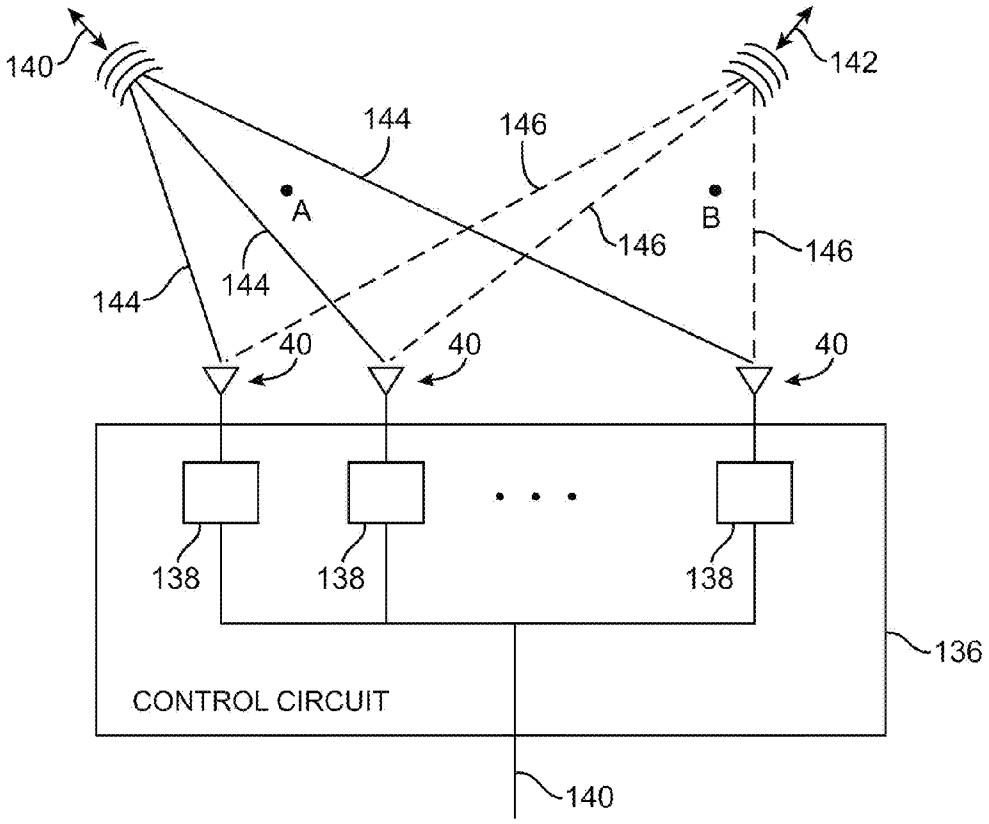
140
142
144
146
A
B
146
146
144
144
40
40
40
138
138
138
136
CONTROL CIRCUIT
140

FIG. 8

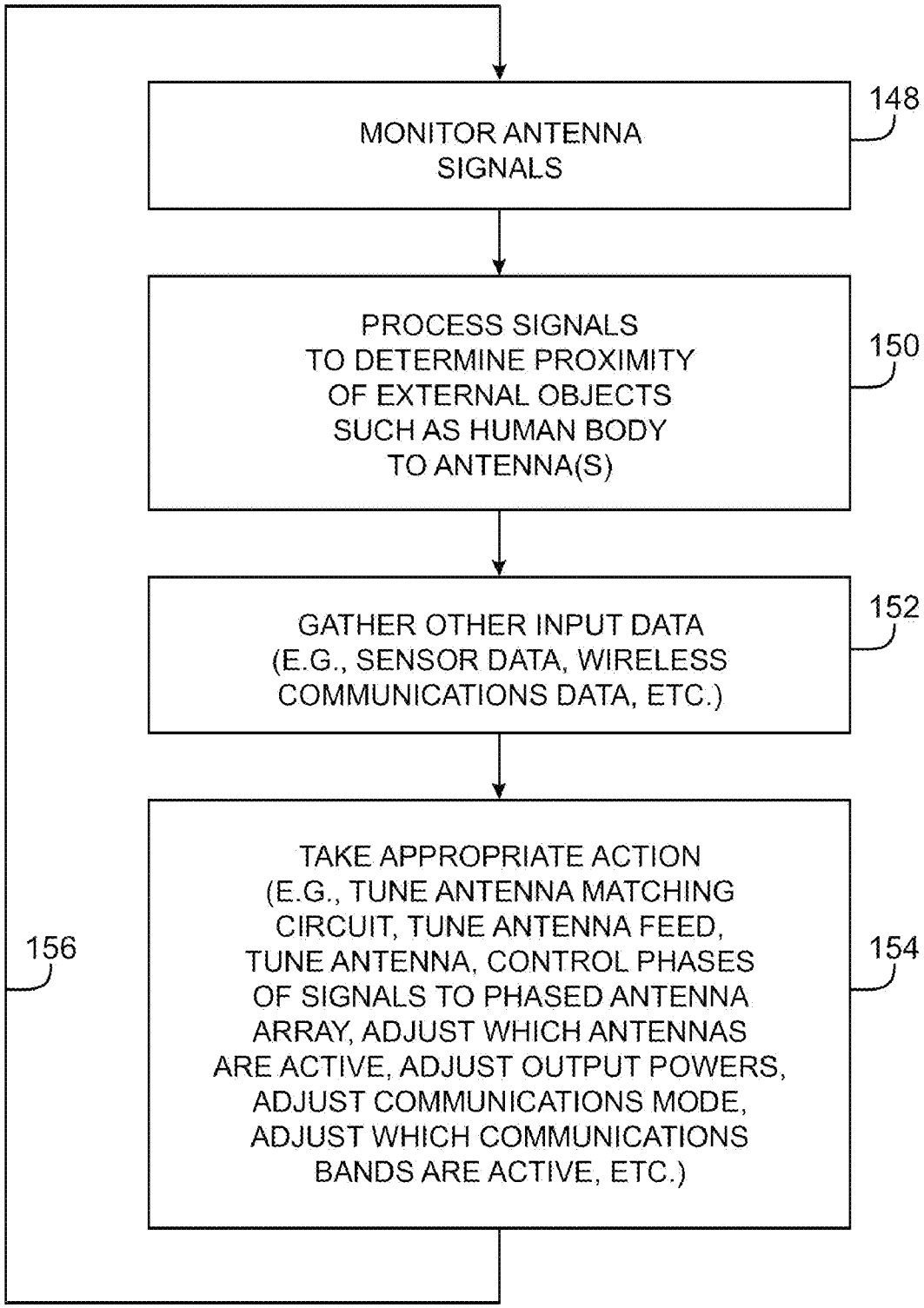
MONITOR ANTENNA SIGNALS
148
PROCESS SIGNALS TO DETERMINE PROXIMITY OF EXTERNAL OBJECTS SUCH AS HUMAN BODY TO ANTENNA(S)
150
GATHER OTHER INPUT DATA (E.G., SENSOR DATA, WIRELESS COMMUNICATIONS DATA, ETC.)
152
TAKE APPROPRIATE ACTION (E.G., TUNE ANTENNA MATCHING CIRCUIT, TUNE ANTENNA FEED, TUNE ANTENNA, CONTROL PHASES OF SIGNALS TO PHASED ANTENNA ARRAY, ADJUST WHICH ANTENNAS ARE ACTIVE, ADJUST OUTPUT POWERS, ADJUST COMMUNICATIONS MODE, ADJUST WHICH COMMUNICATIONS BANDS ARE ACTIVE, ETC.)
154
156

FIG. 9

ADJUSTABLE WIRELESS CIRCUITRY WITH ANTENNA-BASED PROXIMITY DETECTOR

BACKGROUND

[0001] This relates generally to wireless communications circuitry, and more particularly, to electronic devices that have wireless communications circuitry whose operation may be adjusted based on the proximity of the electronic devices to external objects.

[0002] Electronic devices such as computers and handheld electronic devices are becoming increasingly popular. Devices such as these are often provided with wireless communications capabilities. For example, electronic devices may use long-range wireless communications circuitry such as cellular telephone circuitry to communicate using cellular telephone bands. Electronic devices may use short-range wireless communications links to handle communications with nearby equipment. For example, electronic devices may communicate using the WiFi® (IEEE 802.11) bands at 2.4 GHz and 5 GHz and the Bluetooth® band at 2.4 GHz.

[0003] To satisfy consumer demand for small form factor wireless devices, manufacturers are continually striving to implement wireless communications circuitry such as antenna components using compact structures. To satisfy regulatory guidelines for maximum emitted power, it may be desirable to limit the radio-frequency output of an electronic device. Care must be taken, however, to ensure that the proper wireless operation of the electronic device is not disrupted. If emitted wireless signal strengths are overly limited, a device may not function satisfactorily.

[0004] In view of these considerations, it would be desirable to provide improved wireless circuitry for electronic devices.

SUMMARY

[0005] Electronic devices such as portable electronic devices may be provided with one or more antennas. The antennas may operate in a common communications band (e.g., when implementing an antenna diversity arrangement) or may operate in separate communications bands. An array of antennas may be controlled using phase controllers to implement a phased antenna array capable of beam steering. Antennas may be provided with tunable matching networks, tunable feeds, tunable antenna resonating elements, and adjustable tuning circuits.

[0006] The electronic device may determine whether a user's body or other external object is within a given distance of an antenna by making antenna impedance measurements. The antenna impedance measurements may be made using signal phase and magnitude monitoring circuitry that is coupled to the antenna.

[0007] The electronic device may also include other sensors such as thermal sensors, infrared heat sensors, motion sensors, capacitance sensors, ambient light sensors, infrared light proximity sensors, acoustic sensors, cameras, electrical (resistance) sensors, etc. Data from each of these sensors may be used in addition to the antenna impedance measurement data to help accurately determine whether the external object is in the vicinity of the antenna.

[0008] Transceiver and power amplifier circuitry may be used in transmitting radio-frequency antenna signals through the antenna. A communications protocol, transmit data rate, and a given communications band may be used when transmitting signals.

[0009] Storage and processing circuitry may process information from an antenna-based proximity sensor and from other sensors and sources of data within the electronic device to determine when external objects are within a given distance of the antennas in the device are how to respond. Appropriate actions that may be taken when an external object is detected include adjustments to transmit power through the antenna, adjustments to the type of communications protocol that is being used, adjustments to the rate at which data is being wirelessly transmitted, and adjustments to the communications band that is being used for wireless transmissions. Antennas may be selectively disabled and may have their powers adjusted individually. In a phased antenna array, the direction in which the antenna array is operating may be adjusted. The antennas in the device may also be tuned in response to the detection of external objects by adjusting matching circuits, antenna feed locations, tuning circuits, and adjustable switches that control the size and shape of the active portions of antenna resonating elements within the antennas.

[0010] Further features of the invention, its nature and various advantages will be more apparent from the accompanying drawings and the following detailed description of the preferred embodiments.

BRIEF DESCRIPTION OF THE DRAWINGS

[0011] FIG. **1** is a perspective view of an illustrative electronic device with wireless communications circuitry in accordance with an embodiment of the present invention.

[0012] FIG. **2** is a schematic diagram of an illustrative electronic device with wireless communications circuitry in accordance with an embodiment of the present invention.

[0013] FIG. **3** is circuit diagram of illustrative wireless circuitry in an electronic device in accordance with an embodiment of the present invention.

[0014] FIG. **4** is a circuit diagram showing illustrative circuitry that may be used to measure radio-frequency antenna signals in real time during operation of an electronic device in accordance with an embodiment of the present invention.

[0015] FIG. **5** is a Smith chart showing how antenna impedance may vary in response to the presence or absence of different types of external objects in accordance with an embodiment of the present invention.

[0016] FIG. **6** is a diagram of an illustrative adjustable antenna matching circuit, an illustrative adjustable antenna feed, illustrative adjustable antenna tuning circuitry, and an adjustable antenna resonating element for an adjustable antenna in accordance with an embodiment of the present invention.

[0017] FIG. **7** is a schematic diagram of an illustrative electronic device with multiple antennas in accordance with an embodiment of the present invention.

[0018] FIG. **8** is a diagram of an illustrative phased antenna array that may be adjusted in real time using control circuitry in an electronic device in accordance with an embodiment of the present invention.

[0019] FIG. **9** is a flow chart of illustrative steps involved in operating an electronic device with sensors and wireless circuitry in accordance with an embodiment of the present invention.

DETAILED DESCRIPTION

[0020] Electronic devices may be provided with wireless communications circuitry. The wireless communications circuitry may be used to support wireless communications such as long-range wireless communications (e.g., communications in cellular telephone bands) and short-range communications (i.e., local area network links such as WiFi® links, Bluetooth® links, etc.). The wireless communications circuitry may include one or more antennas.

[0021] The electronic devices may include proximity sensors that are implemented using circuitry that monitors antenna signals. A proximity sensor of this type may, for example, discern whether a user's hand or other body part is in the vicinity of an antenna in an electronic device. Other sensor data may also be gathered by the device.

[0022] Processing circuitry may be used to process the antenna signal proximity sensor data and other data to determine when it is necessary to adjust the wireless circuitry. The processing circuitry may decide to adjust the wireless circuitry whenever appropriate criteria have been satisfied. Examples of criteria that might be used to determine when a wireless circuit adjustment is appropriate include criteria specifying how close a user's body may be located to a particular antenna as determined by a radio-frequency antenna signal proximity sensor, which antennas in an array are close to a user's body, how a device is being oriented, what type of applications are currently running on the device, whether the device is moving, whether an external object appears to be in the vicinity of the device as measured by a light sensor, heat sensor, infrared light or heat sensor, acoustic sensor, or capacitive sensor, etc.

[0023] After gathering proximity data and other suitable data using one or more of these sensors, the processing circuitry may take appropriate action. Examples of actions that may be taken include adjusting the amount of radio-frequency power that is transmitted through each antenna, switching to a desired antenna mode (e.g., switching between a mode in which multiple antennas are used to a mode in which a single antenna is used or vice versa), adjusting a phased antenna array (e.g., to steer an antenna away from the user's body), adjusting which communications bands are active, adjusting how fast data is transmitted, delaying data transmission for particular types of data, switching which communications protocol is being used, issuing an alert, prompting a user to take a particular action such as reorienting the device, etc. Proximity data may sometimes be a particularly reliable form of data to use in controlling radio-frequency emissions from wireless circuitry, but ancillary data such as data from other sensors and data on the current operation of a device may be used to increase the accuracy and appropriateness of any actions that are taken. Changes in output power and other adjustments that are being made in response to antenna-based proximity sensor data and other gathered data may be made in conjunction with changes in output power that are made in response to transmit power commands received from a cellular network.

[0024] Any suitable electronic devices may be provided with wireless circuitry that is controlled in this way. As an example, control techniques such as these may be used in electronic devices such as desktop computers, game consoles, routers, laptop computers, computers embedded in a computer monitor or television, computers that are part of set-top boxes or other consumer electronics equipment, relatively compact electronic devices such as portable electronic devices, etc. The use of portable electronic devices is sometimes described herein as an example. This is, however, merely illustrative. Wireless circuitry may be controlled based on proximity data and other information in any electronic device.

[0025] An illustrative portable electronic device in accordance with an embodiment of the present invention is shown in FIG. **1**. Portable electronic devices such as illustrative portable electronic device **10** of FIG. **1** may be laptop computers or small portable computers such as ultraportable computers, netbook computers, and tablet computers. Portable electronic devices may also be somewhat smaller devices. Examples of smaller portable electronic devices include wrist-watch devices, pendant devices, headphone and earpiece devices, and other wearable and miniature devices. With one suitable arrangement, the portable electronic devices are handheld electronic devices such as cellular telephones. Other examples of handheld devices include media players with wireless communications capabilities, handheld computers (also sometimes called personal digital assistants), remote controllers, global positioning system (GPS) devices, and handheld gaming devices. Handheld devices and other portable devices may, if desired, include the functionality of multiple conventional devices. Examples of multi-functional devices include cellular telephones that include media player functionality, gaming devices that include wireless communications capabilities, cellular telephones that include game and email functions, and handheld devices that receive email, support mobile telephone calls, and support web browsing. These are merely illustrative examples. Device **10** of FIG. **1** may be any suitable portable or handheld electronic device.

[0026] Device **10** includes housing **12**. Housing **12**, which is sometimes referred to as a case, may be formed of any suitable materials including plastic, glass, ceramics, carbon-fiber composites and other composites, metal, other suitable materials, or a combination of these materials. Device **10** may be formed using a unibody construction in which most or all of housing **12** is formed from a single structural element (e.g., a piece of machined metal or a piece of molded plastic) or may be formed from multiple housing structures (e.g., outer housing structures that have been mounted to internal frame elements or other internal housing structures).

[0027] Device **10** may, if desired, have a display such as display **14**. Display **14** may, for example, be a touch screen that incorporates capacitive touch electrodes. Display **14** may include image pixels formed form light-emitting diodes (LEDs), organic LEDs (OLEDs), plasma cells, electronic ink elements, liquid crystal display (LCD) components, or other suitable image pixel structures. A cover glass member may cover the surface of display **14**. Buttons such as button **16** may pass through openings in the cover glass. Openings may also be formed in the cover glass of display **14** to form a speaker port such as speaker port **18**. Openings in housing **12** may be used to form input-output ports, microphone ports, speaker ports, button openings, etc.

[0028] Wireless communications circuitry in device **10** may be used to form remote and local wireless links. One or more antennas may be used during wireless communications.

[0029] Single-band and multiband antennas may be used. For example, a single-band antenna may be used to handle Bluetooth® communications at 2.4 GHz (as an example). As another example, a multiband antenna may be used to handle cellular telephone communications in multiple cellular telephone bands. Other types of communications links may also be supported using single-band and multiband antennas.

[0030] If desired, device **10** may use multiple antennas to support an antenna diversity scheme. With this type of arrangement, control circuitry in device **10** may monitor signal quality or sensor data to determine which antenna or antennas are performing best or are otherwise desirable to use (e.g., to satisfy regulatory limits). Based on these considerations, the control circuitry may then choose to use only a subset of the antennas or may otherwise adjust antenna use. If, for example, a sensor or a signal quality measurement determines that one of two antennas in an antenna diversity arrangement has become blocked by an external object such as part of a human body, the control circuitry may temporarily inactivate that antenna.

[0031] Device **10** may also use multiple antennas to implement a multiple-input-multiple-output (MIMO) communications protocol (e.g., to enhance data throughput). The control circuitry in device **10** may use proximity data or other data to control operation of the multiple antennas in the MIMO setup. For example, the control circuitry may temporarily switch from MIMO operation to a protocol that uses only a single antenna or may switch from a four-antenna MIMO scheme to a two-antenna MIMO scheme, etc.

[0032] Device **10** may include a phased antenna array. The array may include multiple antenna elements (i.e., multiple antennas). Control circuitry may be used to control the signals that are routed to and from the antenna elements (e.g., by controlling signal phases). The control circuitry can alter the direction in which the antenna operates. If, for example, it is desired to point the antenna in a first direction, the control circuitry can use a first group of antenna element phase settings. If it is desired to point the antenna in a second direction that is different than the first direction, the control circuitry can use a distinct second group of phase settings. Using this approach, the power of the radio-frequency signals that are emitted by the antenna array can be steered to avoid or minimize emissions into external objects (e.g., to comply with regulatory limits by avoiding radio-frequency emissions into human tissue).

[0033] Combinations of these approaches may also be used. For example, the control circuitry in device **10** may use proximity sensor information or other sensor data to determine the location of external objects relative to the device. The control circuitry can also ascertain what tasks are being performed by the device and what tasks are scheduled to be performed or are likely to be performed. As an example, the control circuitry can determine that a user is currently using device **10** for a telephone call or can determine that an email message has been queued up for transmission or is likely to be sent (e.g., because an email application is currently open). Using this collection of information, the control circuitry can balance the current and future needs of the user against the need to regulate emitted power. The control circuitry may take a combination of corresponding actions including switching antennas in an antenna diversity scheme, changing which wireless communications protocol (algorithm) is used, changing which wireless communications mode is used while complying with the same overall protocol, changing the settings in a beam forming phase antenna array so that emitted signals are directed towards a new location, etc.

[0034] Antennas in device **10** may be used to support any communications bands of interest. For example, device **10** may include antenna structures for supporting local area network communications, voice and data cellular telephone communications, global positioning system (GPS) communications, Bluetooth® communications, etc. As an example, a lower antenna in region **20** of device **10** may be used in handling voice and data communications in one or more cellular telephone bands, whereas an upper antenna in region **22** of device **10** may provide coverage in a first band for handling Global Positioning System (GPS) signals at 1575 MHz and a second band for handling Bluetooth® and IEEE 802.11 (wireless local area network) signals at 2.4 GHz (as examples). Additional antennas may be provided to implement antenna diversity schemes, phased antenna arrays (e.g., at 60 GHz), additional bands, etc.

[0035] A schematic diagram of an illustrative electronic device is shown in FIG. **2**. Device **10** of FIG. **2** may be a portable computer such as a portable tablet computer, a mobile telephone, a mobile telephone with media player capabilities, a handheld computer, a remote control, a game player, a global positioning system (GPS) device, a combination of such devices, or any other suitable electronic device.

[0036] As shown in FIG. **2**, device **10** may include storage and processing circuitry **28**. Storage and processing circuitry **28** may include storage such as hard disk drive storage, nonvolatile memory (e.g., flash memory or other electrically-programmable-read-only memory configured to form a solid state drive), volatile memory (e.g., static or dynamic random-access-memory), etc. Processing circuitry in storage and processing circuitry **28** may be used to control the operation of device **10**. This processing circuitry may be based on one or more microprocessors, microcontrollers, digital signal processors, application specific integrated circuits, etc.

[0037] Storage and processing circuitry **28** may be used to run software on device **10**, such as internet browsing applications, voice-over-internet-protocol (VoIP) telephone call applications, email applications, media playback applications, operating system functions, etc. To support interactions with external equipment, storage and processing circuitry **28** may be used in implementing communications protocols. Communications protocols that may be implemented using storage and processing circuitry **28** include internet protocols, wireless local area network protocols (e.g., IEEE 802.11 protocols—sometimes referred to as WiFi®), protocols for other short-range wireless communications links such as the Bluetooth® protocol, cellular telephone protocols, MIMO protocols, antenna diversity protocols, etc.

[0038] Input-output circuitry **30** may be used to allow data to be supplied to device **10** and to allow data to be provided from device **10** to external devices. Input-output devices **32** such as touch screens and other user input interface are examples of input-output circuitry **32**. Input-output devices **32** may also include user input-output devices such as buttons, joysticks, click wheels, scrolling wheels, touch pads, key pads, keyboards, microphones, cameras, etc. A user can control the operation of device **10** by supplying commands through such user input devices. Display and audio devices such as display **14** (FIG. **1**) and other components that present visual information and status data may be included in devices **32**. Display and audio components in input-output devices **32** may also include audio equipment such as speakers and other

devices for creating sound. If desired, input-output devices **32** may contain audio-video interface equipment such as jacks and other connectors for external headphones and monitors.

[0039] Input-output devices **30** may include sensors. Data from sensors may be used to control the operation of device **10**. For example, data from sensors in device **10** may be used to control screen brightness, the orientation of information on screen **14**, the operation of wireless circuitry, etc.

[0040] The sensors in device **10** may include thermal sensors **41**. Thermal sensors **41** may be used to detect where and when a user is touching device **10**. For example, thermal sensors **41** may be used to monitor when a user is holding device **10** in the user's hand or may be used to monitor when device **10** is resting on the user's lap. Multiple thermal sensors **41** may be provided to determine where a user's body is contacting device **10**. There may be, for example, a thermal sensor associated with each of multiple antennas in device **10**. If a temperature rise is measured near one of the antennas, the power of that antenna may be reduced or other appropriate action may be taken. Sensors **41** may be implemented using thermocouples, bimetallic temperature sensors, solid state devices, or other suitable temperature sensors.

[0041] The sensors in device **10** may also include infrared heat sensors **42**. Heat sensors **42** may measure heat using thermal imaging techniques (i.e., by detecting the emitted infrared light from an object that is characteristic of the object's heat). If desired, Peltier effect coolers, heat sinks, or other devices may be used to cool infrared heat sensors **42** to reduce noise. As with thermal sensors **41**, infrared heat sensors **42** may be used to detect whether a user is touching device **10**. Infrared heat sensors **42** may, for example, be used to detect when a user is holding device **10** or is resting device **10** on the user's lap. More than one infrared heat sensor **42** may be provided. This allows device **10** to determine where an external object such as a part of a user's body is contacting device **10**. Each of the antennas in device **10** may be provided with a respective infrared heat sensor **42**. Appropriate action may be taken when heat is detected adjacent to a particular antenna. For example, the antenna may be temporarily inactivated. Infrared heat sensors **42** may be implemented using semiconductor devices or other suitable infrared heat sensor equipment. Heat sensors **42** may operate in the near-infrared band (i.e., 700 nm to 1400 nm), or may operate at longer wavelengths such as those in the short-wavelength, mid-wavelength, or long-wavelength infrared bands.

[0042] Motion sensors **43**, which may sometimes referred to as accelerometers, may be used to detect the earth's gravity and the relative motion of device **10**. Motion sensors **43** may therefore be used to determine how device **10** is oriented and whether device **10** is exhibiting movement characteristic of human use. For example, one or more motion sensors **43** may be used in determining whether display **14** lies in a plane parallel to the plane of the earth's surface (as when device **10** is resting flat on a table and is not adjacent to a user's body) or at a non-zero angle relative to the plane of the earth's surface. Sensors **43** can also determine whether device **10** is oriented in a landscape orientation or a portrait orientation. Movement such as periodic transitions between landscape and portrait mode or jiggling motions may be indicative of human use and can be detected using sensors **43**.

[0043] Capacitance sensors **44** may be integrated into a touch screen such as display **14** or may be provided as stand-alone devices. Capacitance sensors **44**, which may sometimes be referred to as touch sensors, may be used to determine when an external object such as a portion of a user's body has come into direct contact with device **10** or has come within a given threshold distance of device **10** (e.g., within 5 mm). Data gathered with capacitance sensors **44** may be used to generate proximity data (i.e., data on the proximity of external objects to device **10**), so sensors **44** may sometimes be referred to as proximity sensors or capacitive proximity sensors.

[0044] Ambient light sensors **45** may be used to measure the amount of light that is illuminating device **10**. Ambient light sensors **45** may be sensitive in the visible spectrum and/or the infrared. Sensors **45** may be used to determine when a user's body is adjacent to particular portions of device **10**. For example, an ambient light sensor may be mounted on the front face of device **10** to detect when a user has placed device **10** in the vicinity of the user's head (and has thereby blocked light from reaching the ambient light sensor). Infrared light proximity sensor **46** may similarly use a light detector to determine whether an external object is in the vicinity of device **10**. Infrared light proximity sensor **46** may include an active emitter such as an infrared light emitting diode. The diode may be modulated to improve the signal-to-noise ratio of the sensor. When light from the diode is reflected back into an infrared light sensor in the infrared light proximity sensor **46**, the sensor can generate an output signal indicating that an object is in the vicinity of sensor **46**.

[0045] Acoustic sensors **47** may include microphones. The microphone may gather ambient noise readings that are indicative of whether device **10** is being used by a user. For example, a microphone in an acoustic sensor may be used to detect the amount of ambient noise that is present in the vicinity of device **10**. If ambient noise or certain types of ambient noise (e.g., voices) are present, device **10** can conclude that device **10** is being used by a user. Acoustic sensors **47** may also include acoustic emitters (e.g., ultrasonic transducers). This type of acoustic sensor may use echolocation techniques to measure the distance between device **10** and surrounding objects and may therefore serve as an acoustic proximity sensor.

[0046] Electrical sensors **48** may be used to make electrical measurements. Electrical sensors **48** may include, for example, current sensors, resistance sensors, voltage sensors, etc. Electrodes that are formed as part of electrical sensors **48** or that are electrically connected to sensors **48** may be used in making electrical measurements. As an example, a pair of electrical terminals may be located on portions of housing **12**. An electrical sensor may measure the resistance between the electrical terminals. When a user holds device **10** in the user's hand, the electrical sensor may detect a drop in resistance that is indicative of the presence of the user's hand.

[0047] If desired, input-output circuitry **30** may include cameras such as cameras **49**. Cameras **49** may have image sensor integrated circuits that include two-dimensional arrays of light-sensitive pixels. Image sensors in cameras **49** may have sufficient resolution for forming photographs or may have lower resolution (e.g., for gathering proximity data or other data on the environment of device **10**). The image sensors in cameras **49** may be sensitive in the visible spectrum, in the infrared spectrum, etc. Image data that is acquired by cameras **49** may include still images and moving images (video clips). This information may be processed by a general purpose processor, a dedicated image processing circuit, or other circuitry in storage and processing circuitry **28**.

[0048] Cameras **49** may gather information that is used in determining whether or not a user's body or other external objects are in the vicinity of device **10**. Examples of acquired image data that may indicate that a user's body or other external object is in the vicinity of device **10** and antennas in device **10** include images containing a user's face or other identifiable body part, images containing motion, images containing flesh tones, hair, or other human attributes, image data such as video data indicating motion towards the antennas of device **10** or other portion of device **10**, dark (black) images and other images in which a camera sensor (i.e., a camera window and camera module lens) in device **10** has been obscured and therefore blocked by a human body part or other external object, etc. This information may be combined with other sensor data to enhance human body detection accuracy.

[0049] Sensors such as sensors **41**, **42**, **43**, **44**, **45**, **46**, **47**, **48**, and **49** are merely illustrative. Other sensors may be used to gather data on the environment and operation of device **10** if desired. These sensors may serve as proximity sensors or may produce information that can be used in conjunction with proximity sensor data to enhance the accuracy of the proximity sensor data. The sensors can be provided as single stand-alone units, as groups of multiple stand-alone units, in combined structures in which the functionality of multiple sensors are combined into a single unit, etc.

[0050] Wireless communications circuitry **34** may include radio-frequency (RF) transceiver circuitry formed from one or more integrated circuits, power amplifier circuitry, low-noise input amplifiers, passive RF components, one or more antennas, and other circuitry for handling RF wireless signals. Wireless signals can also be sent using light (e.g., using infrared communications). Wireless communications circuitry **34** may include radio-frequency transceiver circuits for handling multiple radio-frequency communications bands. For example, circuitry **34** may include transceiver circuitry **36** and **38**. Transceiver circuitry **36** may handle 2.4 GHz and 5 GHz bands for WiFi® (IEEE 802.11) communications and may handle the 2.4 GHz Bluetooth® communications band. Circuitry **34** may use cellular telephone transceiver circuitry **38** for handling wireless communications in cellular telephone bands such as the GSM bands at 850 MHz, 900 MHz, 1800 MHz, and 1900 MHz, and the 2100 MHz data band (as examples). Circuitry **38** may handle voice data and non-voice data. Wireless communications circuitry **34** can include circuitry for other short-range and long-range wireless links if desired. For example, wireless communications circuitry **34** may include global positioning system (GPS) receiver equipment such as GPS receiver circuitry **37** for receiving GPS signals at 1575 MHz or for handling other satellite positioning data, wireless circuitry for receiving radio and television signals, paging circuits, etc. In WiFi® and Bluetooth® links and other short-range wireless links, wireless signals are typically used to convey data over tens or hundreds of feet. In cellular telephone links and other long-range links, wireless signals are typically used to convey data over thousands of feet or miles.

[0051] Wireless communications circuitry **34** may include antennas **40**. Antennas **40** may be formed using any suitable antenna types. For example, antennas **40** may include antennas with resonating elements that are formed from loop antenna structure, patch antenna structures, inverted-F antenna structures, slot antenna structures, planar inverted-F antenna structures, helical antenna structures, hybrids of these designs, etc. Different types of antennas may be used for different bands and combinations of bands. For example, one type of antenna may be used in forming a local wireless link antenna and another type of antenna may be used in forming a remote wireless link antenna.

[0052] With one suitable arrangement, device **10** may have antennas in regions of device **10** such as upper region **22** and lower region **20**. One or more upper antennas for device **10** may be formed in region **22**. One or more lower antennas for device **10** may be formed in region **20**. In devices with other form factors such as laptop and tablet computers, wearable devices, computer monitors with integrated computers, etc., antennas may be located in other suitable regions (e.g., at the four corners of a rectangular device, on front and back surfaces, along edge regions of a device, in one or more arrays, etc.

[0053] Illustrative wireless communications circuitry that may be used in circuitry **34** of FIG. **2** in device **10** is shown in FIG. **3**. As shown in FIG. **3**, wireless communications circuitry **50** may include one or more antennas such as antennas **40**. Baseband module **52** may be implemented using a single integrated circuit (e.g., a baseband processor integrated circuit) or using multiple circuits. Baseband processor **52** may receive signals to be transmitted over antennas **40** at input line **89** (e.g., from storage and processing circuitry **28**). Baseband processor **52** may provide signals that are to be transmitted to transmitter circuitry within RF transceiver circuitry **54**. The transmitter circuitry may be coupled to power amplifier circuitry **56** via path **55**. Control signals from storage and processing circuitry **28** (FIG. **1**) may be used to control the power of the radio-frequency signals that the transmitter circuitry within transceiver circuitry **54** supplies to the input of power amplifier circuitry **56** via path **55**.

[0054] During data transmission, power amplifier circuitry **56** may boost the output power of transmitted signals to a sufficiently high level to ensure adequate signal transmission. Amplified signals may be supplied to circuitry **57** on output path **65**. Radio-frequency (RF) output stage circuitry **57** may contain radio-frequency switches and passive elements such as duplexers and diplexers. The switches in RF output stage circuitry **57** may, if desired, be used to switch circuitry **50** between a transmitting mode and a receiving mode. Duplexer and diplexer circuits and other passive components in RF output stage **57** may be used to route input and output signals based on their frequency. A connector in stage **57** may allow an external cable to be connected to device **10** for calibration.

[0055] Matching circuitry **60** may include a network of components such as resistors, inductors, and capacitors and ensures that antennas **40** are impedance matched to the rest of the circuitry **50**. Wireless signals that are received by antennas **40** may be passed to receiver circuitry in transceiver circuitry **54** over a path such as path **67**. A low noise amplifier in the receiver circuitry of transceiver circuits **54** may be used to amplify incoming wireless signals from path **67**.

[0056] Each power amplifier (e.g., each power amplifier in power amplifiers **56**) may include one or more power amplifier stages. As an example, each power amplifier may be used to handle a separate communications band and each such power amplifier may have three series-connected power amplifier stages. Circuitry **56** and the amplifier stages in circuitry **56** may have inputs that receive control signals and power supply signals that may be adjusted to selectively turn on and off gain stages and that may be otherwise adjusted to control the output power of the radio-frequency antenna sig-

nals on path **65**. Output power can also be controlled by adjusting the power on path **55** (e.g., using transceiver circuitry **54**). By adjusting wireless circuitry **50** in this way, the transmitted power of the radio-frequency antenna signals that pass through antennas **40** may be adjusted in real time. For example, transmitted antenna signal power may be adjusted in real time in response to the detection of the presence of a user's body or other external object in the presence of device **10** and antennas **40**.

[0057] Wireless circuitry **50** may include radio-frequency signal monitoring circuitry that may be used in implementing an antenna-based proximity sensor. The radio-frequency signal monitoring circuitry may measure the phase and magnitude of antenna signals associated with antennas **40**. Based on this radio-frequency signal information, storage and processing circuitry **28** (FIG. **1**) can determine whether the behavior of antennas **40** are being influenced by the presence of a user's body or other external object. When a user's body or other object is detected, the output power of the radio-frequency signals passing through antenna **40** can be lowered to ensure that regulatory limits are satisfied or other suitable actions may be taken.

[0058] Illustrative wireless circuitry **61** that may be used in implementing an antenna-based proximity sensor of this type is shown in FIG. **4**. As shown in FIG. **4**, wireless circuitry **61** may receive transmitted radio-frequency antenna signals on path **63** (e.g., from power amplifier circuitry **56**, output stage **57**, matching circuitry **60**, etc.). Coupler **62** may route the transmitted radio-frequency antenna signals to antenna **40**, so that these signals are transmitted over the air to a remote receiver.

[0059] Coupler **62** may also serve as a tap that routes a fraction of the transmitted signals from path **63** to phase and magnitude detector circuitry **64** over path **69**. Radio-frequency antenna signals that are received by coupler **62** from antenna **40** (e.g., transmitted signals that have reflected from antenna **40**) may be routed to phase and magnitude detector circuitry **64**. Radio-frequency signal phase and magnitude detector circuitry **64** may monitor the values of the signals on paths **69** and **71** and may generate corresponding measured phase and magnitude information that is passed to signal processor **66** over path **73**. Circuitry such as circuitry **64** and **66** may be implemented using dedicated hardware, one or more general purpose processors, digital signal processing circuitry, or other suitable control circuitry (e.g., storage and processing circuitry **28** of FIG. **1**).

[0060] Antenna signal monitoring circuitry **61** may be used to monitor one, two, more than two, or all of the antennas **40** in device **10**. Using antenna signal monitoring circuitry such as circuitry **61** of FIG. **4**, the behavior of each of antennas **40** and therefore information on the environment in which each of antennas **40** is operating may be measured in real time. This information may be used as antenna-based proximity sensor data (i.e., circuitry **61** may be used to serve as one or more proximity sensors that are sensitive to the presence of external objects in the vicinity of each of antennas **40**). Whenever the measurements of circuitry **61** and the information of other sensors in device **10** indicate that a user's body or other external object is in the vicinity of device **10** or a particular antenna **40** in device **10** (i.e., closer than a threshold distance), device **10** may take appropriate actions.

[0061] Circuitry **61** may be used to make real-time antenna impedance measurements, as illustrated in connection with the Smith chart of FIG. **5**. In the Smith chart of FIG. **5**, antenna impedances for an illustrative one of antennas **40** are measured as a function of several different operating conditions. A fifty ohm antenna impedance is characterized by impedance point **80** in the chart of FIG. **5**. An antenna with an impedance close to point **80** may be considered well matched to a fifty ohm transmission line in device **10**.

[0062] Data points for the curves of FIG. **5** may be gathered in real time using circuitry **61**. Impedance data may be gathered while transceiver circuitry **54** is transmitting wireless data signals during normal operation (e.g., while transceiver circuitry **54** is transmitting data over a local or remote wireless communications link). In this type of arrangement, impedance measurements may be made using an in-band arrangement (e.g., measurements may be made in the communications band being used by device **10** to transmit wireless data). In addition, or as an alternative, a tunable radio-frequency source in transceiver circuits **54** may produce a probe frequency that is swept through frequencies of interest while circuitry **61** gathers phase and magnitude data that is converted to impedance data points. The probe frequency may be restricted to in-band frequencies (i.e., frequencies on segment **70**) or may involve the use of out-of-band frequencies (i.e., frequencies elsewhere on curve **68**). In-band and out-of-band antenna impedance measurements such as these may be made periodically, whenever normal transceiver circuitry in device **10** is quiescent, when other proximity sensors indicate that an external object might be present, when other criteria are satisfied, etc.

[0063] The example of FIG. **5** illustrates how antenna impedance is influenced by the environment in which device **10** operates. In the absence of any external objects, an antenna in device **10** may, for example, be characterized by a curve such as curve **68**. Darkened line segment **70**, which extends between band edge point **72** and band edge point **74** may correspond to the antenna impedances associated with a communications band of interest.

[0064] If an external object such as a metal surface or a user's hand comes into contact with an antenna **40** (e.g., if device **10** is placed on a metal surface or if a user grips device **10** so that the user's hand or other body part is flush with an antenna feed portion of antenna **40**), the impedance of antenna **40** may change. For example, the impedance of antenna **40** may be characterized by a curve such as curve **76**. Darkened line segment **78**, which extends between band edge point **77** and band edge point **79** may correspond to the antenna impedances associated with the communications band of interest under these new operating conditions. Circuitry **61** may detect the transformation of curve segment **70** into curve segment **78** on characteristic curve **76** and may therefore conclude that device **10** is in the vicinity of a metal surface or user's hand.

[0065] In the presence of portions of the human body or other external objects that exhibit significant losses, the impedance of the antenna may be characterized by a curve such as curve **82**. In this type of situation, curve segment **70** is transformed into a curve segment such as curve segment **85**, extending from point **86** to point **84** on curve **82**. Due to the losses produced by the external object, there may be a relatively modest number of signal reflections, resulting in a curve segment location that is relatively close to point **80**.

[0066] Actions that may be taken when close proximity of an external object to one or more antennas is detected may include tuning antennas in device **10**, tuning matching circuitry in device **10**, tuning antenna feeds in device **10**, etc.

[0067] Consider, as an example, the illustrative antenna of FIG. **6**. Antenna **40** in the FIG. **6** example has an inverted-F configuration. Main resonating element arm **114** is connected to ground **88** through a short circuit path such as path **132**, a feed path (see, e.g., terminals **110** and **108**), and one or more optional paths such as the path formed by element **120** (e.g., a switch), the path formed by element **122**, and the path formed by elements **124** and **126**. Optional antenna resonating element branches such as branch **130** may be coupled to antenna **40** (e.g., by connecting branch **130** to main resonating element arm **114**).

[0068] As shown in FIG. **6**, antenna **40** may be feed from a source such as source **90** (i.e., transceiver circuitry such as transceiver circuitry **54** of FIG. **3**). A transmission line having paths such as positive antenna signal path **94** and ground antenna signal path **92** may be used to convey radio-frequency antenna signals from source **90** to antenna **40**.

[0069] Matching circuitry **60** may be interposed in the path between source **90** and antenna **40**. Matching circuitry **60** may include series-connected and shunt-connected tunable components such as tunable component **98**. Component **98** may be a tunable capacitor, a tunable inductor, a tunable resistor, a tunable component or network that includes multiple components of this type, a tunable network that includes a mixture of fixed and tunable components, etc.

[0070] If desired, controllable switches such as switch **100** may be used to selectively adjust circuitry **60**. Switches such as switch **100** may be radio-frequency switches that are implemented using microelectromechanical systems (MEMS) technology, using field-effect transistor devices, or other suitable switch arrangements. As illustrated in the example of FIG. **6**, switches such as switch **100** may be used to selectively connect circuit elements such as circuit element **102** to paths **94** and **92** (i.e., in a series or shunt configuration or as part of a more complex network). Circuit element **102** may be a fixed or adjustable component such as a resistor, capacitor, inductor, etc.

[0071] Transmission line paths such as positive transmission line path **104** and ground transmission line path **106** may be used to interconnect matching circuitry **60** to the antenna feed of antenna **40**. The antenna feed may have a fixed or tunable configuration. In the example of FIG. **6**, the antenna feed for antenna **40** is tunable between a first antenna feed configuration in which switch **118** has a first position and a second antenna feed configuration in which switch **118** has a second position. When switch **118** is in its first position, terminal **108** is connected to terminal **112**, so that terminal **112** serves as the positive antenna feed terminal for antenna **40**. When switch **118** is in its second position, terminal **108** is connected to terminal **116**, so that terminal **116** serves as the positive antenna feed terminal for antenna **40**. Feed terminals **112** and **116** are located at different positions along the length of main resonating element arm **114**, so the impedance and therefore the frequency response of antenna **40** can be adjusted by using switch **118** to control the feed location in antenna **40**. The arrangement of FIG. **6** is merely illustrative. In general, antennas such as antenna **40** in device **10** may have tunable feeds formed from two or more feed points, tunable feeds that involve one, two, three, or more than three switches, non-tunable feeds, etc.

[0072] As shown in FIG. **6**, antenna **40** may have a resonating element that is composed of tunable elements. This allows the size and shape of the resonating element in antenna **40** to be controlled by storage and processing circuitry **28**. In the FIG. **6** arrangement, switch **128** may have two states (as an example). In its first state, switch **128** may be open. This electrically disconnects antenna resonating element portion **130** from antenna resonating element portion **114**. In its second state, switch **128** may be closed. When switch **128** is closed, resonating element arm portion **130** is electrically connected to arm **114**, thereby adjusting the size and shape of the antenna resonating element and adjusting the frequency response of the antenna. Additional resonating element structures may likewise be selectively connected and disconnected from the antenna resonating element in antenna **40** if desired. Circuit components (e.g., resistors, inductors, and capacitors) may be interconnected with switches such as switch **128** (e.g., for impedance matching).

[0073] Antenna **40** may also be adjusted by controlling components such as switch **120** and tunable component **122**. Switches such as switch **120** (e.g., a MEMs or transistor switch) may be opened and closed to tune antenna **40**. Tunable component **122** may be a tunable capacitor, tunable resistor, tunable inductor, or other suitable circuitry having a tunable impedance that can be adjusted to tune antenna **40**. In the FIG. **6** example, tunable component **122** has been connected between antenna resonating element arm **114** and ground antenna element **88**, but this is merely illustrative. Tunable components such as component **122** may be connected in series with antenna resonating element branches such as branches **114** and **130**, may be connected in series with short circuit antenna branch **132**, may be connected in parallel with these antenna structures, or may otherwise be interconnected with the components of antenna **40**.

[0074] Tuning capabilities for antenna **40** may also be implemented using switches such as switch **120** and switch **124**. Switches **120** and **124** may, for example, be controlled by storage and processing circuitry **28**. When switch **124** is in its open position, component **126** may be disconnected from antenna **40**. When switch **124** is in its closed position, component **126** may be connected between resonating element arm **114** and ground **88**. Adjustable circuits such as these may be interconnected in series or parallel with any suitable antenna component (e.g., arm **130**, arm **132**, arm **114**, ground **88**, etc.). Fixed components such as capacitors, resistors, and inductors may also be included in the tuning circuitry of antenna **40**.

[0075] These antenna adjustment schemes may be used individually or together. For example, antenna **40** can be adjusted by adjusting a matching network that is coupled to the antenna's transmission line, by adjusting the position of the antenna feed (e.g., using switching circuitry), by adjusting antenna tuning (e.g., by using switches and/or tunable circuit components), and by adjusting the size and shape of the antenna itself (e.g., by using switches or other controllable circuit components to selectively change the size and shape of the antenna resonating element, the antenna ground, or parasitic antenna elements). If desired, only some or only one of these adjustment mechanisms may be included in antenna **40**. The arrangement of FIG. **6** is an example.

[0076] FIG. **7** is a top view of an illustrative electronic device that has a rectangular outline. As shown in FIG. **7**, antennas may be mounted in four corners of device **10**. For example, antenna **40**A may be mounted in an upper left corner, antenna **40**B may be mounted in an upper right corner, antenna **40**C may be located in a lower left corner, and antenna **40**D may be located in a lower right corner. If desired, additional antennas may be mounted in device **10** (e.g., at one

or more midpoints along the edges of device **10**, at interior locations, on external antenna mounts, etc.).

[0077] Control circuitry **134** (e.g., storage and processing circuitry and wireless circuitry) may be used in gathering antenna signals from antennas **40**A, **40**B, **40**C, and **40**D (e.g., for implementing antenna-based proximity sensors) and may be used in controlling antennas **40**A, **40**B, **40**C, and **40**D. For example, antenna adjustments may be made to antennas **40**A, **40**B, **40**C, and **40**D using antenna control techniques of the type described in connection with FIG. **6**. These antenna adjustments may be used to control the bandwidth of the antennas, the communications bands covered by the antennas, the impedance of the antennas, etc. Each antenna may have associated wireless circuits such as circuitry **50** of FIG. **3**. This circuitry may be adjusted to control the output power of each antenna. For example, the power that is transmitted by antennas that are near to external objects can be reduced or these antennas can be temporarily deactivated. If, as an example, an external object is detected in the vicinity of antenna **40**B, antenna **40**B can be deactivated and one, two, or three of the remaining antennas **40**A, **40**C, and **40**D may be used. Adjustments may also be made to the type of communications scheme that is being used during data transmissions. For example, a MIMO scheme may be used that involves use of all four antennas (**40**A, **40**B, **40**C, and **40**D) of FIG. **7**. If an external object is detected in the vicinity of antennas **40**A, **40**B, and **40**C (as an example), use of the MIMO scheme can be halted and an alternate scheme may be used such as a multiple-input-single-output communications scheme that uses only a single antenna such as antenna **40**D to transmit signals. Combinations of these approaches may be used if desired.

[0078] Device **10** may include a phased antenna array such as the array shown in FIG. **8**. As shown in FIG. **8**, an array of antennas **40** may be coupled to a signal path such as path **140**. During signal transmission operations, path **140** may be used to supply radio-frequency antenna signals to the antenna array for transmission to external wireless equipment. During signal reception operations, path **140** may be used to route radio-frequency antenna signals that have been received by antennas **40** from external wireless equipment to receiver circuitry in device **10**.

[0079] The use of multiple antennas in array **40** allows beam steering arrangements to be implemented by controlling the relative phases of the signals for the antennas. In the example of FIG. **8**, antennas **40** each have a corresponding radio-frequency phase controller **138**. There may be, for example, 3-30 (or 5-20) antennas **40** and 3-30 (or 5-20) corresponding phase control circuits **138**.

[0080] Control circuitry **136** may use phase controllers **138** or other suitable phase control circuitry to adjust the relative phases of the transmitted radio-frequency antenna signals that are provide to each of the antennas in the antenna array. If, for example, control circuitry **136** is adjusted to produce a first set of phases on the transmitted signals, transmitted signals **144** from antennas **40** will form a radio-frequency beam such as beam **144** that is oriented in the direction of point A. If, however, control circuitry **136** adjusts phase controllers **138** to produce a second set of phases with controllers **138**, transmitted signals **146** will form a radio-frequency beam such as beam **142** that is oriented in the direction of point B. Phase tuning can also be used steer the direction of the antenna array during signal reception operations. With one suitable arrangement, the array of antennas in FIG. **8** may be used to handle a communications band such as a communications band at 60 GHz (as an example). Wireless communications in other frequency bands of interest may also be supported.

[0081] During normal operations, the settings of control circuitry **136** may be adjusted in real time to maximize signal strength (e.g., to maximize signal-to-noise ratio) or otherwise optimize performance. If, however, an external object such as a user's body is detected in the proximity of device **10**, control circuitry **136** may be used to steer the direction in which the antenna array operates so as to bypass the external object. As an example, if a proximity sensor or other sensor detects that an external object is located at point A, control circuitry **136** may be used to adjust the antenna array so that the antenna sends and receives signals along path **142** in the direction of point B. Antenna steering can be used in combination with other responses to detected objects (e.g., selective or collective transmit power reductions, communications mode adjustments, communications band adjustments, etc.).

[0082] Illustrative steps involved in using an electronic device in which actions may be taken in response to detected objects in the vicinity of the device and its antennas are shown in FIG. **9**.

[0083] At step **148**, antenna signal monitoring circuitry such as circuitry **61** of FIG. **4** may be used to make real time measurements of the impedance of antenna **40**. One or more of the antennas (i.e., all of the antennas) in device **10** may be monitored in this way. Phase and magnitude detector circuitry **64** can use information such as phase and magnitude information on tapped outgoing radio-frequency antenna signals and the tapped reflected radio-frequency antenna signals to determine the impedance of antenna **40**. As described in connection with the Smith chart of FIG. **5**, the impedance of each antenna may be monitored at in-band frequencies or at out-of-band frequencies. An optional signal generator may be used to generate test signals or, if desired, signal measurements may be made using existing transmitted data signals.

[0084] At step **150**, storage and processing circuitry **28** (FIG. **2**) may be used to analyze the antenna impedance measurements from circuitry **61**. The results of this analysis may reveal, as an example, that a user's body or other external object is located in the vicinity of certain antennas in device **10**, as described in connection with FIG. **5**.

[0085] At step **152**, storage and processing circuitry **28** may gather additional information on the state of device **10**. For example, storage and processing circuitry **28** may gather information on which communications bands are being used in wirelessly communicating with external equipment, may gather information on current transmit power settings, may gather sensor information from additional sensors (e.g., the sensors of FIG. **2**), etc.

[0086] At step **154**, storage and processing circuitry **28** may process the signals from the antenna-based proximity sensor (i.e., circuitry **61**), the sensors of FIG. **2**, and other circuitry in device **10** to determine whether antenna adjustments and other adjustments to the operation of the wireless circuitry of device **10** should be made. During the processing of step **154**, device **10** may, for example, determine, for each antenna **40**, whether an external object such as a user's body is in the vicinity of the antenna. A weighting scheme may be used to weight data from different sensors.

[0087] As an example, consider a device that contains three antennas and corresponding antenna-based sensors of the type shown in FIG. **4**, light-based proximity sensor such as

sensors **45**, and capacitance-based proximity sensors such as sensors **44** (as examples). The light-based and capacitance-based sensors may be located adjacent to respective antennas. Measurements from the antenna-based sensors may indicate that an external object is blocking the first antenna (i.e., these measurements may indicate that an external object is adjacent to the first antenna and is therefore within a given distance of the first antenna). The capacitance-based sensors may produce identical results, but the light-based sensor may indicate that both the first and second antennas are blocked. By analyzing data from all three sensors, device **10** can determine whether external objects are in the vicinity of each antenna and can determine a suitable course of action.

[0088] For example, device **10** can inhibit operation of the first and second antennas in favor of the third antenna, device **10** can turn off all three antennas, or device **10** can reduce power to the first and second antennas while continuing to operate all three antennas. Device **10** may also make adjustments to each antenna by controlling antenna matching circuitry, antenna feeds, antenna resonating elements, and antenna tuning circuits as described in connection with FIG. **6**. In devices that contain a phased antenna array, the direction of the signal beam associated with the antenna may be steered in response to the proximity information. For example, if an external object is detected in one location, the array can be adjusted so that antenna signals are oriented in a different direction.

[0089] The actions that are taken at step **154** in response to processing the data that has been gathered may include adjustments to the communications band that is being used by the wireless circuitry (e.g., by shifting from a 5.0 GHz band to a 2.4 GHz band so that more appropriate antennas may be used). Device **10** may also decide to cease MIMO operation (e.g., so that a blocked antenna is not used for signal transmission or is not used for signal transmission or reception). If it is desired to reduce transmit powers, device **10** may also decide to reduce data rates to sustainable levels (i.e., levels that are appropriate to the amount of signal strength that is available).

[0090] If desired, the operations of steps **148**, **150**, **152**, and **154** may be implemented in a device without extensive redundant antenna resources. For example, a device may have only one cellular telephone antenna. Circuitry **61** of FIG. **4** may be used to monitor the impedance of the antenna in real time. Device **10** may reduce the output power of the antenna when impedance measurements of the type described in connection with FIG. **7** reveal that an external object is partly or completely blocking the antenna.

[0091] In general, any suitable information may be used in determining what actions are appropriate when adjusting the antennas. For example, information from the sensors of FIG. **2**, from application software, from circuitry **61** of FIG. **4**, and other information may be processed by device **10** to determine whether an external object is adjacent to the antenna (e.g., whether an external object is within the vicinity of the antenna by virtue of being within a given threshold distance of the antenna). In response, device **10** may reduce or otherwise adjust antenna powers and other antenna circuit attributes, may control communications modes, may control communications bands, antenna phases, etc. As indicated by line **156** in FIG. **9**, these operations may be repeated (e.g., continuously) during operation of device **10**.

[0092] The foregoing is merely illustrative of the principles of this invention and various modifications can be made by those skilled in the art without departing from the scope and spirit of the invention. The foregoing embodiments may be implemented individually or in any combination.

What is claimed is:

1. An electronic device, comprising:

an antenna with which the electronic device transmits radio-frequency signals;

phase and magnitude detector circuitry that is coupled to the antenna and that makes radio-frequency signal phase and magnitude measurements; and

storage and processing circuitry that determines whether an external object is adjacent to the antenna by processing the radio-frequency signal phase and magnitude measurements.

2. The electronic device defined in claim **1** further comprising wireless circuitry that uses the antenna to transmit the radio-frequency signals at a given transmit power, wherein the storage and processing circuitry is configured to adjust the transmit power based on the radio-frequency signal phase and magnitude measurements.

3. The electronic device defined in claim **2** wherein the wireless circuitry comprises:

a transceiver; and

power amplifier circuitry, wherein the storage and processing circuitry is configured to lower the transmit power by adjusting the transceiver and power amplifier circuitry when it is determined that the external object is within a given distance of the antenna.

4. The electronic device defined in claim **1** further comprising a capacitive proximity sensor, wherein the storage and processing circuitry is configured to adjust the transmit power based on the radio-frequency signal phase and magnitude measurements and based on data from the capacitive proximity sensor.

5. The electronic device defined in claim **1** further comprising a motion sensor, wherein the storage and processing circuitry is configured to adjust the transmit power based on the radio-frequency signal phase and magnitude measurements and based on data from the motion sensor.

6. The electronic device defined in claim **1** further comprising at least first and second sensors, wherein the storage and processing circuitry is configured to adjust the transmit power based on the radio-frequency signal phase and magnitude measurements and based on data from the first and second sensors.

7. The electronic device defined in claim **1** further comprising a proximity sensor, wherein the storage and processing circuitry is configured to adjust the transmit power based on the radio-frequency signal phase and magnitude measurements and based on data from the proximity sensor.

8. A method of using an electronic device, comprising:

transmitting radio-frequency antenna signals through an antenna in the electronic device at a transmit power;

with phase and magnitude detector circuitry that is coupled to the antenna in the electronic device, making radio-frequency antenna signal phase and magnitude measurements to determine whether an external object is adjacent to the antenna; and

in response to determining that the external object is within a given distance of the antenna using the phase and magnitude detector circuitry, adjusting the transmit power.

9. The method defined in claim **8** further comprising:

gathering sensor input data from a proximity sensor, wherein adjusting the transmit power comprises adjusting the transmit power based on information from the phase and magnitude detector circuitry and from the proximity sensor.

10. The method defined in claim **8** further comprising:

gathering sensor input data from a motion sensor, wherein adjusting the transmit power comprises adjusting the transmit power based on information from the phase and magnitude detector circuitry and from the motion sensor.

11. The method defined in claim **8** further comprising:

gathering sensor input data from an infrared heat sensor, wherein adjusting the transmit power comprises adjusting the transmit power based on information from the phase and magnitude detector circuitry and from the infrared heat sensor.

12. The method defined in claim **8** further comprising:

gathering sensor input data from a sensor selected from the group consisting of: a camera sensor, a thermal sensor, a resistance sensor, and an acoustic sensor, wherein adjusting the transmit power comprises adjusting the transmit power based on information from the phase and magnitude detector circuitry and from the sensor.

13. A portable electronic device comprising:

at least one antenna having an antenna impedance; and

circuitry that determines whether an external object is adjacent to the antenna by making phase and magnitude measurements on radio-frequency antenna signals associated with the antenna to monitor the antenna impedance.

14. The portable electronic device defined in claim **13** wherein the at least one antenna comprises an antenna in a phased antenna array and wherein the circuitry is configured to adjust the phased antenna array based on the phase and magnitude measurements.

15. The portable electronic device defined in claim **13** wherein the portable electronic device comprises a cellular telephone transceiver coupled to the antenna, wherein the circuitry that determines whether the external object is adjacent to the antenna comprises a coupler interposed between the cellular telephone transceiver and the antenna.

16. The portable electronic device defined in claim **15** wherein the circuitry that determines whether the external object is adjacent to the antenna comprises radio-frequency signal phase and magnitude detector circuitry that receives radio-frequency signals from the coupler.

17. The portable electronic device defined in claim **16** wherein the cellular telephone transceiver transmits signals in a communications band and wherein the radio-frequency signal phase and magnitude detector circuitry is configured to make in-band antenna impedance measurements at frequencies within the communications band.

18. The portable electronic device defined in claim **16** wherein the cellular telephone transceiver transmits signals in a communications band and wherein the radio-frequency signal phase and magnitude detector circuitry is configured to make out-of-band antenna impedance measurements at frequencies outside of the communications band.

19. The portable electronic device defined in claim **13** wherein the antenna comprises multiple resonating element arms and a switch that selectively couples the antenna resonating element arms.

20. The portable electronic device defined in claim **13** wherein the portable electronic device comprises a transceiver coupled to the antenna, wherein the transceiver transmits data using a given communications protocol, using a given communications band, and using a given data rate, and wherein the circuitry is configured to adjust a selected one of: the given communications protocol, the given communications band, and the given data rate in response to determining that the external object is adjacent to the antenna.

* * * * *