UNITED STATES PATENT AND TRADEMARK OFFICE

UNITED STATES DEPARTMENT OF COMMERCE
United States Patent and Trademark Office
Address: COMMISSIONER FOR PATENTS
P.O. Box 1450
Alexandria, Virginia 22313-1450
www.uspto.gov

APPLICATION NO.	ISSUE DATE	PATENT NO.	ATTORNEY DOCKET NO.	CONFIRMATION NO.
12/541,764	01/08/2013	8350763	08610010AA	4086

30743 7590 12/18/2012
WHITHAM, CURTIS & CHRISTOFFERSON & COOK, P.C.
11491 SUNSET HILLS ROAD
SUITE 340
RESTON, VA 20190

ISSUE NOTIFICATION

The projected patent number and issue date are specified above.

Determination of Patent Term Adjustment under 35 U.S.C. 154 (b)
(application filed on or after May 29, 2000)

The Patent Term Adjustment is 571 day(s). Any patent to issue from the above-identified application will include an indication of the adjustment on the front page.

If a Continued Prosecution Application (CPA) was filed in the above-identified application, the filing date that determines Patent Term Adjustment is the filing date of the most recent CPA.

Applicant will be able to obtain more detailed information by accessing the Patent Application Information Retrieval (PAIR) WEB site (http://pair.uspto.gov).

Any questions regarding the Patent Term Extension or Adjustment determination should be directed to the Office of Patent Legal Administration at (571)-272-7702. Questions relating to issue and publication fee payments should be directed to the Application Assistance Unit (AAU) of the Office of Data Management (ODM) at (571)-272-4200.

APPLICANT(s) (Please see PAIR WEB site http://pair.uspto.gov for additional applicants):

Theodore S. Rappaport, Austin, TX;

The United States represents the largest, most dynamic marketplace in the world and is an unparalleled location for business investment, innovation, and commercialization of new technologies. The USA offers tremendous resources and advantages for those who invest and manufacture goods here. Through SelectUSA, our nation works to encourage and facilitate business investment. To learn more about why the USA is the best country in the world to develop technology, manufacture products, and grow your business, visit SelectUSA.gov.

PART B - FEE(S) TRANSMITTAL

Complete and send this form, together with applicable fee(s), to: Mail **Mail Stop ISSUE FEE**
Commissioner for Patents
P.O. Box 1450
Alexandria, Virginia 22313-1450
or Fax (571)-273-2885

INSTRUCTIONS: This form should be used for transmitting the ISSUE FEE and PUBLICATION FEE (if required). Blocks 1 through 5 should be completed where appropriate. All further correspondence including the Patent, advance orders and notification of maintenance fees will be mailed to the current correspondence address as indicated unless corrected below or directed otherwise in Block 1, by (a) specifying a new correspondence address; and/or (b) indicating a separate "FEE ADDRESS" for maintenance fee notifications.

CURRENT CORRESPONDENCE ADDRESS (Note: Use Block 1 for any change of address)

30743 7590 09/28/2012
WHITHAM, CURTIS & CHRISTOFFERSON & COOK, P.C.
11491 SUNSET HILLS ROAD
SUITE 340
RESTON, VA 20190

Note: A certificate of mailing can only be used for domestic mailings of the Fee(s) Transmittal. This certificate cannot be used for any other accompanying papers. Each additional paper, such as an assignment or formal drawing, must have its own certificate of mailing or transmission.

Certificate of Mailing or Transmission
I hereby certify that this Fee(s) Transmittal is being deposited with the United States Postal Service with sufficient postage for first class mail in an envelope addressed to the Mail Stop ISSUE FEE address above, or being facsimile transmitted to the USPTO (571) 273-2885, on the date indicated below.

(Depositor's name)
(Signature)
(Date)

APPLICATION NO.	FILING DATE	FIRST NAMED INVENTOR	ATTORNEY DOCKET NO.	CONFIRMATION NO.
12/541,764	08/14/2009	Theodore S. Rappaport	08610010AA	4086

TITLE OF INVENTION: ACTIVE ANTENNAS FOR MULTIPLE BANDS IN WIRELESS PORTABLE DEVICES

APPLN. TYPE	SMALL ENTITY	ISSUE FEE DUE	PUBLICATION FEE DUE	PREV. PAID ISSUE FEE	TOTAL FEE(S) DUE	DATE DUE
nonprovisional	YES	$870	$300	$0	$1170	12/28/2012

EXAMINER	ART UNIT	CLASS-SUBCLASS
PHAN, THO GIA	2821	343-702000

1. Change of correspondence address or indication of "Fee Address" (37 CFR 1.363).
☐ Change of correspondence address (or Change of Correspondence Address form PTO/SB/122) attached.
☐ "Fee Address" indication (or "Fee Address" Indication form PTO/SB/47; Rev 03-02 or more recent) attached. **Use of a Customer Number is required.**

2. For printing on the patent front page, list
(1) the names of up to 3 registered patent attorneys or agents OR, alternatively,
(2) the name of a single firm (having as a member a registered attorney or agent) and the names of up to 2 registered patent attorneys or agents. If no name is listed, no name will be printed.

Whitham Curtis Christoffersonf & Cook, PC
2
3

3. ASSIGNEE NAME AND RESIDENCE DATA TO BE PRINTED ON THE PATENT (print or type)

PLEASE NOTE: Unless an assignee is identified below, no assignee data will appear on the patent. If an assignee is identified below, the document has been filed for recordation as set forth in 37 CFR 3.11. Completion of this form is NOT a substitute for filing an assignment.

(A) NAME OF ASSIGNEE (B) RESIDENCE: (CITY and STATE OR COUNTRY)

Please check the appropriate assignee category or categories (will not be printed on the patent) : ☐ Individual ☐ Corporation or other private group entity ☐ Government

4a. The following fee(s) are submitted:
☒ Issue Fee
☒ Publication Fee (No small entity discount permitted)
☐ Advance Order - # of Copies 0

4b. Payment of Fee(s): **(Please first reapply any previously paid issue fee shown above)**
☐ A check is enclosed.
☐ Payment by credit card. Form PTO-2038 is attached.
☒ The Director is hereby authorized to charge the required fee(s), any deficiency, or credit any overpayment, to Deposit Account Number 50-2041 (enclose an extra copy of this form).

5. **Change in Entity Status** (from status indicated above)
☐ a. Applicant claims SMALL ENTITY status. See 37 CFR 1.27.
☐ b. Applicant is no longer claiming SMALL ENTITY status. See 37 CFR 1.27(g)(2).

NOTE: The Issue Fee and Publication Fee (if required) will not be accepted from anyone other than the applicant; a registered attorney or agent; or the assignee or other party in interest as shown by the records of the United States Patent and Trademark Office.

Authorized Signature [signature] Date 12-6-12

Typed or printed name Michael E. Whitham Registration No. 32,635

This collection of information is required by 37 CFR 1.311. The information is required to obtain or retain a benefit by the public which is to file (and by the USPTO to process) an application. Confidentiality is governed by 35 U.S.C. 122 and 37 CFR 1.14. This collection is estimated to take 12 minutes to complete, including gathering, preparing, and submitting the completed application form to the USPTO. Time will vary depending upon the individual case. Any comments on the amount of time you require to complete this form and/or suggestions for reducing this burden, should be sent to the Chief Information Officer, U.S. Patent and Trademark Office, U.S. Department of Commerce, P.O. Box 1450, Alexandria, Virginia 22313-1450. DO NOT SEND FEES OR COMPLETED FORMS TO THIS ADDRESS. SEND TO: Commissioner for Patents, P.O. Box 1450, Alexandria, Virginia 22313-1450.

Under the Paperwork Reduction Act of 1995, no persons are required to respond to a collection of information unless it displays a valid OMB control number.

Electronic Patent Application Fee Transmittal

Application Number:	12541764
Filing Date:	14-Aug-2009
Title of Invention:	ACTIVE ANTENNAS FOR MULTIPLE BANDS IN WIRELESS PORTABLE DEVICES
First Named Inventor/Applicant Name:	Theodore S. Rappaport
Filer:	Michael E. Whitham/karen lumpkins
Attorney Docket Number:	08610010AA

Filed as Small Entity

Utility under 35 USC 111(a) Filing Fees

Description	Fee Code	Quantity	Amount	Sub-Total in USD($)
Basic Filing:				
Pages:				
Claims:				
Miscellaneous-Filing:				
Petition:				
Patent-Appeals-and-Interference:				
Post-Allowance-and-Post-Issuance:				
Utility Appl issue fee	2501	1	885	885
Publ. Fee- early, voluntary, or normal	1504	1	300	300

Description	Fee Code	Quantity	Amount	Sub-Total in USD($)
Extension-of-Time:				
Miscellaneous:				
			Total in USD ($)	**1185**

Electronic Acknowledgement Receipt

EFS ID:	14414659
Application Number:	12541764
International Application Number:	
Confirmation Number:	4086
Title of Invention:	ACTIVE ANTENNAS FOR MULTIPLE BANDS IN WIRELESS PORTABLE DEVICES
First Named Inventor/Applicant Name:	Theodore S. Rappaport
Customer Number:	30743
Filer:	Michael E. Whitham/karen lumpkins
Filer Authorized By:	Michael E. Whitham
Attorney Docket Number:	08610010AA
Receipt Date:	07-DEC-2012
Filing Date:	14-AUG-2009
Time Stamp:	16:08:37
Application Type:	Utility under 35 USC 111(a)

Payment information:

Submitted with Payment	yes
Payment Type	Deposit Account
Payment was successfully received in RAM	$1185
RAM confirmation Number	2925
Deposit Account	502041
Authorized User	

File Listing:

Document Number	Document Description	File Name	File Size(Bytes)/ Message Digest	Multi Part /.zip	Pages (if appl.)

Samsung Ex. 1002, Page 5 of 109

1	Issue Fee Payment (PTO-85B)	08610010AA-payIF.PDF	45051 571903b10bbc76c60b3b32a7ad9d55806ff29d94	no	1
Warnings:					
Information:					
2	Fee Worksheet (SB06)	fee-info.pdf	32058 3f4abf8b49adc2f6b2645fc6c3725f755b929b67	no	2
Warnings:					
Information:					
		Total Files Size (in bytes):	77109		

This Acknowledgement Receipt evidences receipt on the noted date by the USPTO of the indicated documents, characterized by the applicant, and including page counts, where applicable. It serves as evidence of receipt similar to a Post Card, as described in MPEP 503.

New Applications Under 35 U.S.C. 111
If a new application is being filed and the application includes the necessary components for a filing date (see 37 CFR 1.53(b)-(d) and MPEP 506), a Filing Receipt (37 CFR 1.54) will be issued in due course and the date shown on this Acknowledgement Receipt will establish the filing date of the application.

National Stage of an International Application under 35 U.S.C. 371
If a timely submission to enter the national stage of an international application is compliant with the conditions of 35 U.S.C. 371 and other applicable requirements a Form PCT/DO/EO/903 indicating acceptance of the application as a national stage submission under 35 U.S.C. 371 will be issued in addition to the Filing Receipt, in due course.

New International Application Filed with the USPTO as a Receiving Office
If a new international application is being filed and the international application includes the necessary components for an international filing date (see PCT Article 11 and MPEP 1810), a Notification of the International Application Number and of the International Filing Date (Form PCT/RO/105) will be issued in due course, subject to prescriptions concerning national security, and the date shown on this Acknowledgement Receipt will establish the international filing date of the application.

UNITED STATES PATENT AND TRADEMARK OFFICE

UNITED STATES DEPARTMENT OF COMMERCE
United States Patent and Trademark Office
Address: COMMISSIONER FOR PATENTS
P.O. Box 1450
Alexandria, Virginia 22313-1450
www.uspto.gov

NOTICE OF ALLOWANCE AND FEE(S) DUE

30743 7590 09/28/2012
WHITHAM, CURTIS & CHRISTOFFERSON & COOK, P.C.
11491 SUNSET HILLS ROAD
SUITE 340
RESTON, VA 20190

EXAMINER
PHAN, THO GIA

ART UNIT	PAPER NUMBER
2821	

DATE MAILED: 09/28/2012

APPLICATION NO.	FILING DATE	FIRST NAMED INVENTOR	ATTORNEY DOCKET NO.	CONFIRMATION NO.
12/541,764	08/14/2009	Theodore S. Rappaport	08610010AA	4086

TITLE OF INVENTION: ACTIVE ANTENNAS FOR MULTIPLE BANDS IN WIRELESS PORTABLE DEVICES

APPLN. TYPE	SMALL ENTITY	ISSUE FEE DUE	PUBLICATION FEE DUE	PREV. PAID ISSUE FEE	TOTAL FEE(S) DUE	DATE DUE
nonprovisional	YES	$870	$300	$0	$1170	12/28/2012

THE APPLICATION IDENTIFIED ABOVE HAS BEEN EXAMINED AND IS ALLOWED FOR ISSUANCE AS A PATENT. PROSECUTION ON THE MERITS IS CLOSED. THIS NOTICE OF ALLOWANCE IS NOT A GRANT OF PATENT RIGHTS. THIS APPLICATION IS SUBJECT TO WITHDRAWAL FROM ISSUE AT THE INITIATIVE OF THE OFFICE OR UPON PETITION BY THE APPLICANT. SEE 37 CFR 1.313 AND MPEP 1308.

THE ISSUE FEE AND PUBLICATION FEE (IF REQUIRED) MUST BE PAID WITHIN THREE MONTHS FROM THE MAILING DATE OF THIS NOTICE OR THIS APPLICATION SHALL BE REGARDED AS ABANDONED. THIS STATUTORY PERIOD CANNOT BE EXTENDED. SEE 35 U.S.C. 151. THE ISSUE FEE DUE INDICATED ABOVE DOES NOT REFLECT A CREDIT FOR ANY PREVIOUSLY PAID ISSUE FEE IN THIS APPLICATION. IF AN ISSUE FEE HAS PREVIOUSLY BEEN PAID IN THIS APPLICATION (AS SHOWN ABOVE), THE RETURN OF PART B OF THIS FORM WILL BE CONSIDERED A REQUEST TO REAPPLY THE PREVIOUSLY PAID ISSUE FEE TOWARD THE ISSUE FEE NOW DUE.

HOW TO REPLY TO THIS NOTICE:

I. Review the SMALL ENTITY status shown above.

If the SMALL ENTITY is shown as YES, verify your current SMALL ENTITY status:

A. If the status is the same, pay the TOTAL FEE(S) DUE shown above.

B. If the status above is to be removed, check box 5b on Part B - Fee(s) Transmittal and pay the PUBLICATION FEE (if required) and twice the amount of the ISSUE FEE shown above, or

If the SMALL ENTITY is shown as NO:

A. Pay TOTAL FEE(S) DUE shown above, or

B. If applicant claimed SMALL ENTITY status before, or is now claiming SMALL ENTITY status, check box 5a on Part B - Fee(s) Transmittal and pay the PUBLICATION FEE (if required) and 1/2 the ISSUE FEE shown above.

II. PART B - FEE(S) TRANSMITTAL, or its equivalent, must be completed and returned to the United States Patent and Trademark Office (USPTO) with your ISSUE FEE and PUBLICATION FEE (if required). If you are charging the fee(s) to your deposit account, section "4b" of Part B - Fee(s) Transmittal should be completed and an extra copy of the form should be submitted. If an equivalent of Part B is filed, a request to reapply a previously paid issue fee must be clearly made, and delays in processing may occur due to the difficulty in recognizing the paper as an equivalent of Part B.

III. All communications regarding this application must give the application number. Please direct all communications prior to issuance to Mail Stop ISSUE FEE unless advised to the contrary.

IMPORTANT REMINDER: Utility patents issuing on applications filed on or after Dec. 12, 1980 may require payment of maintenance fees. It is patentee's responsibility to ensure timely payment of maintenance fees when due.

Samsung Ex. 1002, Page 7 of 109

PART B - FEE(S) TRANSMITTAL

Complete and send this form, together with applicable fee(s), to: Mail **Mail Stop ISSUE FEE**
Commissioner for Patents
P.O. Box 1450
Alexandria, Virginia 22313-1450
or Fax (571)-273-2885

INSTRUCTIONS: This form should be used for transmitting the ISSUE FEE and PUBLICATION FEE (if required). Blocks 1 through 5 should be completed where appropriate. All further correspondence including the Patent, advance orders and notification of maintenance fees will be mailed to the current correspondence address as indicated unless corrected below or directed otherwise in Block 1, by (a) specifying a new correspondence address; and/or (b) indicating a separate "FEE ADDRESS" for maintenance fee notifications.

CURRENT CORRESPONDENCE ADDRESS (Note: Use Block 1 for any change of address)

30743 7590 09/28/2012
WHITHAM, CURTIS & CHRISTOFFERSON & COOK, P.C.
11491 SUNSET HILLS ROAD
SUITE 340
RESTON, VA 20190

Note: A certificate of mailing can only be used for domestic mailings of the Fee(s) Transmittal. This certificate cannot be used for any other accompanying papers. Each additional paper, such as an assignment or formal drawing, must have its own certificate of mailing or transmission.

Certificate of Mailing or Transmission

I hereby certify that this Fee(s) Transmittal is being deposited with the United States Postal Service with sufficient postage for first class mail in an envelope addressed to the Mail Stop ISSUE FEE address above, or being facsimile transmitted to the USPTO (571) 273-2885, on the date indicated below.

(Depositor's name)
(Signature)
(Date)

APPLICATION NO.	FILING DATE	FIRST NAMED INVENTOR	ATTORNEY DOCKET NO.	CONFIRMATION NO.
12/541,764	08/14/2009	Theodore S. Rappaport	08610010AA	4086

TITLE OF INVENTION: ACTIVE ANTENNAS FOR MULTIPLE BANDS IN WIRELESS PORTABLE DEVICES

APPLN. TYPE	SMALL ENTITY	ISSUE FEE DUE	PUBLICATION FEE DUE	PREV. PAID ISSUE FEE	TOTAL FEE(S) DUE	DATE DUE
nonprovisional	YES	$870	$300	$0	$1170	12/28/2012

EXAMINER	ART UNIT	CLASS-SUBCLASS
PHAN, THO GIA	2821	343-702000

1. Change of correspondence address or indication of "Fee Address" (37 CFR 1.363).
- ❑ Change of correspondence address (or Change of Correspondence Address form PTO/SB/122) attached.
- ❑ "Fee Address" indication (or "Fee Address" Indication form PTO/SB/47; Rev 03-02 or more recent) attached. **Use of a Customer Number is required.**

2. For printing on the patent front page, list
(1) the names of up to 3 registered patent attorneys or agents OR, alternatively,
(2) the name of a single firm (having as a member a registered attorney or agent) and the names of up to 2 registered patent attorneys or agents. If no name is listed, no name will be printed.

1 _____
2 _____
3 _____

3. ASSIGNEE NAME AND RESIDENCE DATA TO BE PRINTED ON THE PATENT (print or type)

PLEASE NOTE: Unless an assignee is identified below, no assignee data will appear on the patent. If an assignee is identified below, the document has been filed for recordation as set forth in 37 CFR 3.11. Completion of this form is NOT a substitute for filing an assignment.

(A) NAME OF ASSIGNEE (B) RESIDENCE: (CITY and STATE OR COUNTRY)

Please check the appropriate assignee category or categories (will not be printed on the patent) : ❑ Individual ❑ Corporation or other private group entity ❑ Government

4a. The following fee(s) are submitted:
- ❑ Issue Fee
- ❑ Publication Fee (No small entity discount permitted)
- ❑ Advance Order - # of Copies _____

4b. Payment of Fee(s): (**Please first reapply any previously paid issue fee shown above**)
- ❑ A check is enclosed.
- ❑ Payment by credit card. Form PTO-2038 is attached.
- ❑ The Director is hereby authorized to charge the required fee(s), any deficiency, or credit any overpayment, to Deposit Account Number _____ (enclose an extra copy of this form).

5. **Change in Entity Status** (from status indicated above)
- ❑ a. Applicant claims SMALL ENTITY status. See 37 CFR 1.27.
- ❑ b. Applicant is no longer claiming SMALL ENTITY status. See 37 CFR 1.27(g)(2).

NOTE: The Issue Fee and Publication Fee (if required) will not be accepted from anyone other than the applicant; a registered attorney or agent; or the assignee or other party in interest as shown by the records of the United States Patent and Trademark Office.

Authorized Signature _____ Date _____

Typed or printed name _____ Registration No. _____

This collection of information is required by 37 CFR 1.311. The information is required to obtain or retain a benefit by the public which is to file (and by the USPTO to process) an application. Confidentiality is governed by 35 U.S.C. 122 and 37 CFR 1.14. This collection is estimated to take 12 minutes to complete, including gathering, preparing, and submitting the completed application form to the USPTO. Time will vary depending upon the individual case. Any comments on the amount of time you require to complete this form and/or suggestions for reducing this burden, should be sent to the Chief Information Officer, U.S. Patent and Trademark Office, U.S. Department of Commerce, P.O. Box 1450, Alexandria, Virginia 22313-1450. DO NOT SEND FEES OR COMPLETED FORMS TO THIS ADDRESS. SEND TO: Commissioner for Patents, P.O. Box 1450, Alexandria, Virginia 22313-1450.

Under the Paperwork Reduction Act of 1995, no persons are required to respond to a collection of information unless it displays a valid OMB control number.

UNITED STATES PATENT AND TRADEMARK OFFICE

UNITED STATES DEPARTMENT OF COMMERCE
United States Patent and Trademark Office
Address: COMMISSIONER FOR PATENTS
P.O. Box 1450
Alexandria, Virginia 22313-1450
www.uspto.gov

APPLICATION NO.	FILING DATE	FIRST NAMED INVENTOR	ATTORNEY DOCKET NO.	CONFIRMATION NO.
12/541,764	08/14/2009	Theodore S. Rappaport	08610010AA	4086

30743 7590 09/28/2012
WHITHAM, CURTIS & CHRISTOFFERSON & COOK, P.C.
11491 SUNSET HILLS ROAD
SUITE 340
RESTON, VA 20190

EXAMINER
PHAN, THO GIA

ART UNIT	PAPER NUMBER
2821	

DATE MAILED: 09/28/2012

Determination of Patent Term Adjustment under 35 U.S.C. 154 (b)
(application filed on or after May 29, 2000)

The Patent Term Adjustment to date is 424 day(s). If the issue fee is paid on the date that is three months after the mailing date of this notice and the patent issues on the Tuesday before the date that is 28 weeks (six and a half months) after the mailing date of this notice, the Patent Term Adjustment will be 424 day(s).

If a Continued Prosecution Application (CPA) was filed in the above-identified application, the filing date that determines Patent Term Adjustment is the filing date of the most recent CPA.

Applicant will be able to obtain more detailed information by accessing the Patent Application Information Retrieval (PAIR) WEB site (http://pair.uspto.gov).

Any questions regarding the Patent Term Extension or Adjustment determination should be directed to the Office of Patent Legal Administration at (571)-272-7702. Questions relating to issue and publication fee payments should be directed to the Customer Service Center of the Office of Patent Publication at 1-(888)-786-0101 or (571)-272-4200.

Privacy Act Statement

The Privacy Act of 1974 (P.L. 93-579) requires that you be given certain information in connection with your submission of the attached form related to a patent application or patent. Accordingly, pursuant to the requirements of the Act, please be advised that: (1) the general authority for the collection of this information is 35 U.S.C. 2(b)(2); (2) furnishing of the information solicited is voluntary; and (3) the principal purpose for which the information is used by the U.S. Patent and Trademark Office is to process and/or examine your submission related to a patent application or patent. If you do not furnish the requested information, the U.S. Patent and Trademark Office may not be able to process and/or examine your submission, which may result in termination of proceedings or abandonment of the application or expiration of the patent.

The information provided by you in this form will be subject to the following routine uses:

1. The information on this form will be treated confidentially to the extent allowed under the Freedom of Information Act (5 U.S.C. 552) and the Privacy Act (5 U.S.C 552a). Records from this system of records may be disclosed to the Department of Justice to determine whether disclosure of these records is required by the Freedom of Information Act.
2. A record from this system of records may be disclosed, as a routine use, in the course of presenting evidence to a court, magistrate, or administrative tribunal, including disclosures to opposing counsel in the course of settlement negotiations.
3. A record in this system of records may be disclosed, as a routine use, to a Member of Congress submitting a request involving an individual, to whom the record pertains, when the individual has requested assistance from the Member with respect to the subject matter of the record.
4. A record in this system of records may be disclosed, as a routine use, to a contractor of the Agency having need for the information in order to perform a contract. Recipients of information shall be required to comply with the requirements of the Privacy Act of 1974, as amended, pursuant to 5 U.S.C. 552a(m).
5. A record related to an International Application filed under the Patent Cooperation Treaty in this system of records may be disclosed, as a routine use, to the International Bureau of the World Intellectual Property Organization, pursuant to the Patent Cooperation Treaty.
6. A record in this system of records may be disclosed, as a routine use, to another federal agency for purposes of National Security review (35 U.S.C. 181) and for review pursuant to the Atomic Energy Act (42 U.S.C. 218(c)).
7. A record from this system of records may be disclosed, as a routine use, to the Administrator, General Services, or his/her designee, during an inspection of records conducted by GSA as part of that agency's responsibility to recommend improvements in records management practices and programs, under authority of 44 U.S.C. 2904 and 2906. Such disclosure shall be made in accordance with the GSA regulations governing inspection of records for this purpose, and any other relevant (i.e., GSA or Commerce) directive. Such disclosure shall not be used to make determinations about individuals.
8. A record from this system of records may be disclosed, as a routine use, to the public after either publication of the application pursuant to 35 U.S.C. 122(b) or issuance of a patent pursuant to 35 U.S.C. 151. Further, a record may be disclosed, subject to the limitations of 37 CFR 1.14, as a routine use, to the public if the record was filed in an application which became abandoned or in which the proceedings were terminated and which application is referenced by either a published application, an application open to public inspection or an issued patent.
9. A record from this system of records may be disclosed, as a routine use, to a Federal, State, or local law enforcement agency, if the USPTO becomes aware of a violation or potential violation of law or regulation.

Notice of Allowability	Application No.	Applicant(s)	
	12/541,764	RAPPAPORT, THEODORE S.	
	Examiner	Art Unit	
	THO G. PHAN	2821	

-- The MAILING DATE of this communication appears on the cover sheet with the correspondence address--

All claims being allowable, PROSECUTION ON THE MERITS IS (OR REMAINS) CLOSED in this application. If not included herewith (or previously mailed), a Notice of Allowance (PTOL-85) or other appropriate communication will be mailed in due course. **THIS NOTICE OF ALLOWABILITY IS NOT A GRANT OF PATENT RIGHTS.** This application is subject to withdrawal from issue at the initiative of the Office or upon petition by the applicant. See 37 CFR 1.313 and MPEP 1308.

1. ☒ This communication is responsive to *a response filed on 7/21/12*.

2. ☐ An election was made by the applicant in response to a restriction requirement set forth during the interview on _____; the restriction requirement and election have been incorporated into this action.

3. ☒ The allowed claim(s) is/are *1,4-10,13-21*.

4. ☐ Acknowledgment is made of a claim for foreign priority under 35 U.S.C. § 119(a)-(d) or (f).
   a) ☐ All b) ☐ Some* c) ☐ None of the:
      1. ☐ Certified copies of the priority documents have been received.
      2. ☐ Certified copies of the priority documents have been received in Application No. _____ .
      3. ☐ Copies of the certified copies of the priority documents have been received in this national stage application from the International Bureau (PCT Rule 17.2(a)).

   * Certified copies not received: _____.

Applicant has THREE MONTHS FROM THE "MAILING DATE" of this communication to file a reply complying with the requirements noted below. Failure to timely comply will result in ABANDONMENT of this application.
THIS THREE-MONTH PERIOD IS NOT EXTENDABLE.

5. ☐ A SUBSTITUTE OATH OR DECLARATION must be submitted. Note the attached EXAMINER'S AMENDMENT or NOTICE OF INFORMAL PATENT APPLICATION (PTO-152) which gives reason(s) why the oath or declaration is deficient.

6. ☐ CORRECTED DRAWINGS (as "replacement sheets") must be submitted.
   (a) ☐ including changes required by the Notice of Draftsperson's Patent Drawing Review (PTO-948) attached
      1) ☐ hereto or 2) ☐ to Paper No./Mail Date _____.
   (b) ☐ including changes required by the attached Examiner's Amendment / Comment or in the Office action of Paper No./Mail Date _____.

   Identifying indicia such as the application number (see 37 CFR 1.84(c)) should be written on the drawings in the front (not the back) of each sheet. Replacement sheet(s) should be labeled as such in the header according to 37 CFR 1.121(d).

7. ☐ DEPOSIT OF and/or INFORMATION about the deposit of BIOLOGICAL MATERIAL must be submitted. Note the attached Examiner's comment regarding REQUIREMENT FOR THE DEPOSIT OF BIOLOGICAL MATERIAL.

Attachment(s)

1. ☐ Notice of References Cited (PTO-892)
2. ☐ Notice of Draftperson's Patent Drawing Review (PTO-948)
3. ☐ Information Disclosure Statements (PTO/SB/08), Paper No./Mail Date _____
4. ☐ Examiner's Comment Regarding Requirement for Deposit of Biological Material
5. ☐ Notice of Informal Patent Application
6. ☐ Interview Summary (PTO-413), Paper No./Mail Date _____ .
7. ☐ Examiner's Amendment/Comment
8. ☒ Examiner's Statement of Reasons for Allowance
9. ☐ Other _____.

/THO G PHAN/
Primary Examiner, Art Unit 2821

DETAILED ACTION

Allowable Subject Matter

1. The following is a statement of reasons for the indication of allowable subject matter: Claim 1 is allowable over the art of record because the prior art does not teach wherein at least one antenna of the one or more antennas is used by the plurality of transmitters, receivers or transceivers in a plurality of different bands, wherein the at least one antenna is one or more of a) an actively tuned antenna, and b) is tuned by one or more passive elements which are selected or interconnected using electronic control and in combination with the remaining claimed limitations.

2. Claim 8 is allowable over the art of record because the prior art does not teach wherein at least one antenna of the one or more antennas is used by the at least one multiband transmitter, receiver or transceiver in a plurality of different bands, wherein the at least one antenna is one or more of a) an actively tuned antenna, and b) is tuned by one or more passive elements which are selected or interconnected using electronic control and in combination with the remaining claimed limitations.

3. Claim 14 is allowable over the art of record because the prior art does not teach a tuner associated with the at least one multiband transmitter, receiver, or transceiver, the tuner matching the at least one multiband antenna to the at least one multiband transmitter, receiver or transceiver in a plurality of different bands simultaneously and in combination with the remaining claimed limitations.

4. Claim 17 is allowable over the art of record because the prior art does not teach one or more components selected from the group consisting of receivers, transmitters and transceivers, the one or more components connected to the at least one of the one or more antennas, whereby at least one of the one or more components transmits or receives electromagnetic energy simultaneously at two or more of the plurality of particular frequency bands, or two or more components transmit or receive electromagnetic energy simultaneously at two or more of the plurality of particular frequency bands and in combination with the remaining claimed limitations.

5. Claim 21 is allowable over the art of record because the prior art does not teach at least one antenna is used by the plurality of transmitters, receivers or transceivers in a plurality of different bands, wherein the at least one antenna is one or more of a) an actively tuned antenna, and b) is tuned by one or more passive elements which are selected or interconnected using electronic control and in combination with the remaining claimed limitations.

Conclusion

Any inquiry concerning this communication or earlier communications from the examiner should be directed to Tho G. Phan whose telephone number is 571-272-1826. The examiner can normally be reached on M-F, 6:30-3:00.

The fax phone number for the organization where this application or proceeding is assigned is 571-273-8300.

Information regarding the status of an application may be obtained from the Patent Application Information Retrieval (PAIR) system. Status information for published applications may be obtained from either Private PAIR or Public PAIR. Status information for unpublished applications is available through Private PAIR only. For more information about the PAIR system, see http://pair-direct.uspto.gov. Should you have questions on access to the Private PAIR system, contact the Electronic Business Center (EBC) at 866-217-9197 (toll-free).

/Tho G Phan/
Primary Examiner, Art Unit 2821

Issue Classification	Application/Control No.	Applicant(s)/Patent Under Reexamination
	12541764	RAPPAPORT, THEODORE S.
	Examiner	**Art Unit**
	THO G PHAN	2821

ORIGINAL		INTERNATIONAL CLASSIFICATION									
CLASS	SUBCLASS	CLAIMED					NON-CLAIMED				
343	702	H	0	1	Q	1 / 24 (2006.01.01)					

CROSS REFERENCE(S)

CLASS	SUBCLASS (ONE SUBCLASS PER BLOCK)				
343	745				

☐ Claims renumbered in the same order as presented by applicant ☐ CPA ☐ T.D. ☐ R.1.47

Final	Original	Final	Original	Final	Original	Final	Original	Final	Original	Final	Original	Final	Original	Final	Original
1	1	13	17												
	2	14	18												
	3	15	19												
2	4	16	20												
3	5	17	21												
4	6														
5	7														
6	8														
7	9														
8	10														
	11														
	12														
9	13														
10	14														
11	15														
12	16														

NONE		Total Claims Allowed:	
(Assistant Examiner)	(Date)	17	
/THO G PHAN/ Primary Examiner.Art Unit 2821	9/23/12	O.G. Print Claim(s)	O.G. Print Figure
(Primary Examiner)	(Date)	1	2

EAST Search History

EAST Search History (Prior Art)

Ref #	Hits	Search Query	DBs	Default Operator	Plurals	Time Stamp
S23	81	((THEODORE) near2 (RAPPAPORT)).INV.	US-PGPUB; USPAT; USOCR	OR	ON	2012/09/20 19:19
S24	1859548	transmitter or receiver or transceiver	US-PGPUB; USPAT; USOCR; FPRS; EPO; JPO; DERWENT; IBM_TDB	OR	ON	2012/09/20 19:19
S25	756756	antenna	US-PGPUB; USPAT; USOCR; FPRS; EPO; JPO; DERWENT; IBM_TDB	OR	ON	2012/09/20 19:19
S26	967862	tun$3	US-PGPUB; USPAT; USOCR; FPRS; EPO; JPO; DERWENT; IBM_TDB	OR	ON	2012/09/20 19:19
S27	13242776	control$4	US-PGPUB; USPAT; USOCR; FPRS; EPO; JPO; DERWENT; IBM_TDB	OR	ON	2012/09/20 19:19
S28	1722419	band	US-PGPUB; USPAT; USOCR; FPRS; EPO; JPO; DERWENT; IBM_TDB	OR	ON	2012/09/20 19:19
S29	4242	S24 S25 S26 S27 S28	US-PGPUB; USPAT; USOCR; FPRS; EPO; JPO; DERWENT; IBM_TDB	SAME	ON	2012/09/20 19:19
S30	629842	parasitic or passive	US-PGPUB; USPAT; USOCR; FPRS; EPO; JPO; DERWENT; IBM_TDB	SAME	ON	2012/09/20 19:19
S31	1129890	wireless	US-PGPUB; USPAT; USOCR; FPRS; EPO; JPO; DERWENT; IBM_TDB	SAME	ON	2012/09/20 19:19
S32	12	S29 S30 S31	US-PGPUB; USPAT; USOCR; FPRS; EPO; JPO; DERWENT; IBM_TDB	SAME	ON	2012/09/20 19:19
S33	75	S29 S30	US-PGPUB; USPAT; USOCR;	SAME	ON	2012/09/20 19:20

			FPRS; EPO; JPO; DERWENT; IBM_TDB			
S34	191	S29 S31	US-PGPUB; USPAT; USOCR; FPRS; EPO; JPO; DERWENT; IBM_TDB	SAME	ON	2012/09/20 19:20
S35	421	S24 S25 S26 S27 S28	US-PGPUB; USPAT; USOCR; FPRS; EPO; JPO; DERWENT; IBM_TDB	WITH	ON	2012/09/20 19:20
S36	3	(antenna and wireless and transmitters and bands and used and plurality and different and tuned).clm.	US-PGPUB; USPAT; USOCR; FPRS; EPO; JPO; DERWENT; IBM_TDB	OR	ON	2012/09/20 19:22
S37	13	(antenna and transmitters and bands and used and plurality and different and tuned).clm.	US-PGPUB; USPAT; USOCR; FPRS; EPO; JPO; DERWENT; IBM_TDB	OR	ON	2012/09/20 19:23
S38	10858	343/702	US-PGPUB; USPAT; USOCR; FPRS; EPO; JPO; DERWENT; IBM_TDB	OR	ON	2012/09/20 19:24
S39	1124	343/745	US-PGPUB; USPAT; USOCR; FPRS; EPO; JPO; DERWENT; IBM_TDB	OR	ON	2012/09/20 19:24

9/23/2012 10:31:59 PM
C:\Users\tphan1\Documents\EAST\Workspaces\12-541,764.wsp

UNITED STATES PATENT AND TRADEMARK OFFICE

UNITED STATES DEPARTMENT OF COMMERCE
United States Patent and Trademark Office
Address: COMMISSIONER FOR PATENTS
P.O. Box 1450
Alexandria, Virginia 22313-1450
www.uspto.gov

BIB DATA SHEET

CONFIRMATION NO. 4086

SERIAL NUMBER	FILING or 371(c) DATE	CLASS	GROUP ART UNIT	ATTORNEY DOCKET NO.
12/541,764	08/14/2009 RULE	343	2821	08610010AA

APPLICANTS
Theodore S. Rappaport, Austin, TX;

**** CONTINUING DATA ***************************
This appln claims benefit of 61/088,829 08/14/2008

**** FOREIGN APPLICATIONS ***************************

**** IF REQUIRED, FOREIGN FILING LICENSE GRANTED **** ** SMALL ENTITY **
09/04/2009

Foreign Priority claimed	☐ Yes ☑ No	☐ Met after Allowance	STATE OR COUNTRY	SHEETS DRAWINGS	TOTAL CLAIMS	INDEPENDENT CLAIMS
35 USC 119(a-d) conditions met	☐ Yes ☑ No		TX	3	21	5
Verified and Acknowledged	/THO GIA PHAN/ Examiner's Signature	Initials				

ADDRESS

WHITHAM, CURTIS & CHRISTOFFERSON & COOK, P.C.
11491 SUNSET HILLS ROAD
SUITE 340
RESTON, VA 20190
UNITED STATES

TITLE

ACTIVE ANTENNAS FOR MULTIPLE BANDS IN WIRELESS PORTABLE DEVICES

FILING FEE RECEIVED		
773	FEES: Authority has been given in Paper No._____ to charge/credit DEPOSIT ACCOUNT No._____ for following:	☐ All Fees ☐ 1.16 Fees (Filing) ☐ 1.17 Fees (Processing Ext. of time) ☐ 1.18 Fees (Issue) ☐ Other _____ ☐ Credit

Search Notes	Application/Control No.	Applicant(s)/Patent Under Reexamination
	12541764	RAPPAPORT, THEODORE S.
	Examiner	**Art Unit**
	THO G PHAN	2821

SEARCHED

Class	Subclass	Date	Examiner
343	702,745	9/20/2012	tp

SEARCH NOTES

Search Notes	Date	Examiner
search history attached	9/20/2012	tp

INTERFERENCE SEARCH

Class	Subclass	Date	Examiner
search history attached	search history attached	9/20/2012	tp

IN THE UNITED STATES PATENT AND TRADEMARK OFFICE

In re patent application of

Rappaport — Confirmation No. 4056

Serial No. 12/541,764 — Group Art Unit 2821

Filed August 14, 2009 — Examiner Phan

For ACTIVE ANTENNAS FOR MULTIPLE BANDS IN WIRELESS PORTABLE DEVICES

Commissioner for Patents
PO Box 1450
Alexandria, Virginia 22313-1450

SUPPLEMENTARY AMENDMENT

Sir:

An amendment was filed on July 16, 2012. The undersigned has noted that the amendment made introduces a claim dependency error in claims 4 and 12. In addition, claim 17 appears could benefit from one addition to support that which was made on July 16, 2012. The applicant requests entry of the following amendments to supplement those made July 16, 2012

Listing of the Claims: begin on page 2

Remarks: begin on page 6

Listing of the Claims:

The following is a complete listing of all the claims in the application, with an indication of the status of each:

1. (previously amended) A wireless device, comprising:

one or more antennas; and

a plurality of transmitters, receivers or transceivers that operate in one or more frequency bands,

wherein at least one antenna of said one or more antennas is used by said plurality of transmitters, receivers or transceivers in a plurality of different bands,

wherein said at least one antenna is one or more of

a) an actively tuned antenna, and

b) is tuned by one or more passive elements which are selected or interconnected using electronic control.

2-3. (Canceled)

4. (currently amended) The wireless device of claim 1 ~~3~~ wherein said passive elements arc comprised of either or both lumped or distributed elements.

5. (Original) The wireless device of claim 1 wherein said at least one antenna is used for transmitting, receiving, or transmitting and receiving simultaneously in said plurality of different bands.

6. (Original) The wireless device of claim 1 further comprising

one or more tuners associated with one or more transmitters, receivers or transceivers of said plurality of transmitters, receivers or transceivers; and

a controller for controlling tuning of the tuner for said at least one antenna to operate in said plurality of different bands.

7. (Original) The wireless device of claim 1 wherein said mobile device is selected from the group consisting of computers, telephones, portable computing

or communication devices, games, wireless post it notes, wireless memory media, RFID tags, vehicles, clothing, personal data assistants and navigation assistants.

8. (Currently amended) A wireless device, comprising:

one or more antennas;

at least one multiband transmitter, receiver or transceiver;

a tuner associated with said at[[.]] least one multiband transmitter, receiver, or transceiver; and

a controller for controlling tuning of the tuner to a plurality of different bands,

wherein at least one antenna of said one or more antennas is used by said at least one multiband transmitter, receiver or transceiver in a plurality of different bands,

wherein said at least one antenna is one or more of

a) an actively tuned antenna, and

b) is tuned by one or more passive elements which are selected or interconnected using electronic control.

9. (Original) The wireless device of claim 8 said at least one antenna is used for transmitting, receiving, or transmitting and receiving simultaneously in said plurality of different bands.

10. (Original) The wireless device of claim 8 wherein said mobile device is selected from the group consisting of computers, telephones, portable computing or communication devices, games, wireless post it notes, wireless memory media, RFID tags, vehicles, clothing, personal data assistants and navigation assistants.

11-12. (Cancelled)

13. (Currently amended) The wireless device of claim 8 ~~12~~ wherein said passive elements are comprised of either or both lumped or distributed elements.

14. (previously presented) A wireless device, comprising:

at least one multiband antenna;

at least one multiband transmitter, receiver or transceiver; and

a tuner associated with said at least one multiband transmitter, receiver, or transceiver, said tuner matching said at least one multiband antenna to said at least one multiband transmitter, receiver or transceiver in a plurality of different bands simultaneously.

15. (Original) The mobile device of claim 14 wherein said at least one antenna is used for transmitting, receiving, or transmitting and receiving simultaneously in said plurality of different bands.

16. (Original) The wireless device of claim 14 wherein said mobile device is selected from the group consisting of computers, telephones, portable computing or communication devices, games, wireless post it notes, wireless memory media, RFID tags, vehicles, clothing, personal data assistants and navigation assistants.

17. (currently amended) A wireless portable device, comprising:

one or more antennas radiating or receiving electromagnetic energy at particular frequency bands, at least one of said one or more antennas radiating or receiving electromagnetic energy at a plurality of particular frequency bands;

one or more components selected from the group consisting of receivers, transmitters and transceivers, said one or more components connected to said at least one of said one or more antennas, whereby

at least one of said one or more components transmits or receives electromagnetic energy simultaneously at two or more of said plurality of particular frequency bands, or

two or more components transmit or receive electromagnetic energy <u>simultaneously</u> at two or more of said plurality of particular frequency bands.

18. (Original) The wireless portable device of claim 17 wherein said wireless portable device is selected from the group consisting of computers, telephones, personal data assistants, and navigation assistants.

19. (Original) The wireless portable device of claim 17 further comprising one or more tuners which match electromagnetic energy at a particular frequency band to only one of said one or more components.

20. (Original) The wireless portable device of claim 17 further comprising isolation means for isolating said one or more components from more than one particular frequency band of said plurality of frequency bands.

21. (previously presented) A wireless device component, comprising a tuner or a set of tuners or controller or other circuitry configurable to be coupled to at least one antenna and a plurality of transmitters, receivers, or transceivers that operate at one or more frequency bands, wherein said at least one antenna is used by said plurality of transmitters, receivers or transceivers in a plurality of different bands,

wherein said at least one antenna is one or more of

a) an actively tuned antenna, and

b) is tuned by one or more passive elements which are selected or interconnected using electronic control.

REMARKS

As a supplement to the amendment filed July 16, 2012, claims 4 and 13 are amended to correct for proper claim dependency; claim 8 is amended to correct for a stray punctuation mark; and claim 17 is amended to add one additional term. These matters are formal in nature, and the undersigned requests grant of allowance of the claims for the reasons set forth in the July 16, 2012 amendment.

Should the Examiner find the application to be other than in condition for allowance, the Examiner is requested to contact the undersigned at the local telephone number listed below to discuss any other changes deemed necessary in a telephonic or personal interview.

A provisional petition is hereby made for any extension of time necessary for the continued pendency during the life of this application. Please charge any fees for such provisional petition any deficiencies in fees, and credit any over payment of fees, to attorney's deposit account 50-2041.

Respectfully submitted,

Michael E. Whitham
Reg. No. 32,635

Whitham, Curtis, Christofferson & Whitham, P.C.
11491 Sunset Hills Road, Suite 340
Reston, VA 20190

Tel. (703) 787-9400
Fax. (703) 787-7557

Customer No.: 30743

Electronic Acknowledgement Receipt

EFS ID:	13308376
Application Number:	12541764
International Application Number:	
Confirmation Number:	4086
Title of Invention:	ACTIVE ANTENNAS FOR MULTIPLE BANDS IN WIRELESS PORTABLE DEVICES
First Named Inventor/Applicant Name:	Theodore S. Rappaport
Customer Number:	30743
Filer:	Michael E. Whitham
Filer Authorized By:	
Attorney Docket Number:	08610010AA
Receipt Date:	21-JUL-2012
Filing Date:	14-AUG-2009
Time Stamp:	12:38:33
Application Type:	Utility under 35 USC 111(a)

Payment information:

Submitted with Payment	no

File Listing:

Document Number	Document Description	File Name	File Size(Bytes)/ Message Digest	Multi Part /.zip	Pages (if appl.)
1		08610010aasupp.pdf	56057 274505927bae425c33510c814cb8af3e738d71bf	yes	6

	Multipart Description/PDF files in .zip description		
	Document Description	**Start**	**End**
	Supplemental Response or Supplemental Amendment	1	1
	Claims	2	5
	Applicant Arguments/Remarks Made in an Amendment	6	6

Warnings:	
Information:	
Total Files Size (in bytes):	56057

This Acknowledgement Receipt evidences receipt on the noted date by the USPTO of the indicated documents, characterized by the applicant, and including page counts, where applicable. It serves as evidence of receipt similar to a Post Card, as described in MPEP 503.

New Applications Under 35 U.S.C. 111
If a new application is being filed and the application includes the necessary components for a filing date (see 37 CFR 1.53(b)-(d) and MPEP 506), a Filing Receipt (37 CFR 1.54) will be issued in due course and the date shown on this Acknowledgement Receipt will establish the filing date of the application.

National Stage of an International Application under 35 U.S.C. 371
If a timely submission to enter the national stage of an international application is compliant with the conditions of 35 U.S.C. 371 and other applicable requirements a Form PCT/DO/EO/903 indicating acceptance of the application as a national stage submission under 35 U.S.C. 371 will be issued in addition to the Filing Receipt, in due course.

New International Application Filed with the USPTO as a Receiving Office
If a new international application is being filed and the international application includes the necessary components for an international filing date (see PCT Article 11 and MPEP 1810), a Notification of the International Application Number and of the International Filing Date (Form PCT/RO/105) will be issued in due course, subject to prescriptions concerning national security, and the date shown on this Acknowledgement Receipt will establish the international filing date of the application.

PTO/SB/06 (07-06)
Approved for use through 1/31/2007. OMB 0651-0032
U.S. Patent and Trademark Office; U.S. DEPARTMENT OF COMMERCE
Under the Paperwork Reduction Act of 1995, no persons are required to respond to a collection of information unless it displays a valid OMB control number.

PATENT APPLICATION FEE DETERMINATION RECORD

Substitute for Form PTO-875

Application or Docket Number	Filing Date	☐ To be Mailed
12/541,764	08/14/2009	

APPLICATION AS FILED – PART I

FOR	(Column 1) NUMBER FILED	(Column 2) NUMBER EXTRA	SMALL ENTITY ☒ RATE ($)	SMALL ENTITY FEE ($)	OR	OTHER THAN SMALL ENTITY RATE ($)	OTHER THAN SMALL ENTITY FEE ($)
☐ BASIC FEE (37 CFR 1.16(a), (b), or (c))	N/A	N/A	N/A			N/A	
☐ SEARCH FEE (37 CFR 1.16(k), (i), or (m))	N/A	N/A	N/A			N/A	
☐ EXAMINATION FEE (37 CFR 1.16(o), (p), or (q))	N/A	N/A	N/A			N/A	
TOTAL CLAIMS (37 CFR 1.16(i))	minus 20 =	*	X $ =		OR	X $ =	
INDEPENDENT CLAIMS (37 CFR 1.16(h))	minus 3 =	*	X $ =			X $ =	
☐ APPLICATION SIZE FEE (37 CFR 1.16(s))	If the specification and drawings exceed 100 sheets of paper, the application size fee due is $250 ($125 for small entity) for each additional 50 sheets or fraction thereof. See 35 U.S.C. 41(a)(1)(G) and 37 CFR 1.16(s).						
☐ MULTIPLE DEPENDENT CLAIM PRESENT (37 CFR 1.16(j))							
* If the difference in column 1 is less than zero, enter "0" in column 2.			TOTAL			TOTAL	

APPLICATION AS AMENDED – PART II

AMENDMENT 07/21/2012

	(Column 1) CLAIMS REMAINING AFTER AMENDMENT		(Column 2) HIGHEST NUMBER PREVIOUSLY PAID FOR	(Column 3) PRESENT EXTRA	SMALL ENTITY RATE ($)	SMALL ENTITY ADDITIONAL FEE ($)	OR	OTHER THAN SMALL ENTITY RATE ($)	OTHER THAN SMALL ENTITY ADDITIONAL FEE ($)
Total (37 CFR 1.16(i))	* 17	Minus	** 21	= 0	X $30 =	0	OR	X $ =	
Independent (37 CFR 1.16(h))	* 5	Minus	***6	= 0	X $125 =	0	OR	X $ =	
☐ Application Size Fee (37 CFR 1.16(s))									
☐ FIRST PRESENTATION OF MULTIPLE DEPENDENT CLAIM (37 CFR 1.16(j))							OR		
					TOTAL ADD'L FEE	0	OR	TOTAL ADD'L FEE	

AMENDMENT

	(Column 1) CLAIMS REMAINING AFTER AMENDMENT		(Column 2) HIGHEST NUMBER PREVIOUSLY PAID FOR	(Column 3) PRESENT EXTRA	RATE ($)	ADDITIONAL FEE ($)		RATE ($)	ADDITIONAL FEE ($)
Total (37 CFR 1.16(i))	*	Minus	**	=	X $ =		OR	X $ =	
Independent (37 CFR 1.16(h))	*	Minus	***	=	X $ =		OR	X $ =	
☐ Application Size Fee (37 CFR 1.16(s))									
☐ FIRST PRESENTATION OF MULTIPLE DEPENDENT CLAIM (37 CFR 1.16(j))							OR		
					TOTAL ADD'L FEE		OR	TOTAL ADD'L FEE	

* If the entry in column 1 is less than the entry in column 2, write "0" in column 3.
** If the "Highest Number Previously Paid For" IN THIS SPACE is less than 20, enter "20".
*** If the "Highest Number Previously Paid For" IN THIS SPACE is less than 3, enter "3".
The "Highest Number Previously Paid For" (Total or Independent) is the highest number found in the appropriate box in column 1.

Legal Instrument Examiner:
/TYWANA LOVELACE/

This collection of information is required by 37 CFR 1.16. The information is required to obtain or retain a benefit by the public which is to file (and by the USPTO to process) an application. Confidentiality is governed by 35 U.S.C. 122 and 37 CFR 1.14. This collection is estimated to take 12 minutes to complete, including gathering, preparing, and submitting the completed application form to the USPTO. Time will vary depending upon the individual case. Any comments on the amount of time you require to complete this form and/or suggestions for reducing this burden, should be sent to the Chief Information Officer, U.S. Patent and Trademark Office, U.S. Department of Commerce, P.O. Box 1450, Alexandria, VA 22313-1450. DO NOT SEND FEES OR COMPLETED FORMS TO THIS ADDRESS. **SEND TO: Commissioner for Patents, P.O. Box 1450, Alexandria, VA 22313-1450.**
If you need assistance in completing the form, call 1-800-PTO-9199 and select option 2.

IN THE UNITED STATES PATENT AND TRADEMARK OFFICE

In re patent application of

Rappaport — Confirmation No. 4056

Serial No. 12/541,764 — Group Art Unit 2821

Filed August 14, 2009 — Examiner Phan

For ACTIVE ANTENNAS FOR MULTIPLE BANDS IN WIRELESS PORTABLE DEVICES

Commissioner for Patents
PO Box 1450
Alexandria, Virginia 22313-1450

PETITION FOR A TWO MONTH EXTENSION OF TIME AND AMENDMENT UNDER 37 C.F.R. 1.111

Sir:

Applicant hereby petitions for a two month extension of time to respond to the office action mailed February 16, 2012. The Commissioner is authorized to charge attorney's deposit account 50-2041 (Whitham, Curtis, Christofferson & Cook) for the extension of time fee and for any other fees required to gain entry and consideration of the amendment.

In response to the office action mailed February 16, 2012 applicant requests entry of the following amendments and consideration of the following remarks:

Listing of the Claims: begin on page 2

Remarks: begin on page 6

Listing of the Claims:

The following is a complete listing of all the claims in the application, with an indication of the status of each:

1. (Currently amended) A wireless device, comprising:

one or more antennas; and

a plurality of transmitters, receivers or transceivers that operate in one or more frequency bands,

wherein at least one antenna of said one or more antennas is used by said plurality of transmitters, receivers or transceivers in a plurality of different bands,

wherein said at least one antenna is one or more of

a) an actively tuned antenna, and

b) is tuned by one or more passive elements which are selected or interconnected using electronic control.

2-3. (Canceled)

4. (Original) The wireless device of claim 3 wherein said passive elements arc comprised of either or both lumped or distributed elements.

5. (Original) The wireless device of claim 1 wherein said at least one antenna is used for transmitting, receiving, or transmitting and receiving simultaneously in said plurality of different bands.

6. (Original) The wireless device of claim 1 further comprising

one or more tuners associated with one or more transmitters, receivers or transceivers of said plurality of transmitters, receivers or transceivers; and

a controller for controlling tuning of the tuner for said at least one antenna to operate in said plurality of different bands.

7. (Original) The wireless device of claim 1 wherein said mobile device is selected from the group consisting of computers, telephones, portable computing

or communication devices, games, wireless post it notes, wireless memory media, RFID tags, vehicles, clothing, personal data assistants and navigation assistants.

8. (Currently amended) A wireless device, comprising:

one or more antennas; ~~and~~

at least one multiband transmitter, receiver or transceiver;

a tuner associated with said at. least one multiband transmitter, receiver, or transceiver; and

a controller for controlling tuning of the tuner to a plurality of different bands,

wherein at least one antenna of said one or more antennas is used by said at least one multiband transmitter, receiver or transceiver in a plurality of different bands,

wherein said at least one antenna is one or more of

a) an actively tuned antenna, and

b) is tuned by one or more passive elements which are selected or interconnected using electronic control.

9. (Original) The wireless device of claim 8 said at least one antenna is used for transmitting, receiving, or transmitting and receiving simultaneously in said plurality of different bands.

10. (Original) The wireless device of claim 8 wherein said mobile device is selected from the group consisting of computers, telephones, portable computing or communication devices, games, wireless post it notes, wireless memory media, RFID tags, vehicles, clothing, personal data assistants and navigation assistants.

11-12. (Cancelled)

13. (Original) The wireless device of claim 12 wherein said passive elements are comprised of either or both lumped or distributed elements.

14. (currently amended) A wireless device, comprising:

at least one multiband antenna;

at least one multiband transmitter, receiver or transceiver; and

a tuner associated with said at least one multiband transmitter, receiver, or transceiver, said tuner matching said at least one multiband antenna to said at least one multiband transmitter, receiver or transceiver in a plurality of different bands simultaneously.

15. (Original) The mobile device of claim 14 wherein said at least one antenna is used for transmitting, receiving, or transmitting and receiving simultaneously in said plurality of different bands.

16. (Original) The wireless device of claim 14 wherein said mobile device is selected from the group consisting of computers, telephones, portable computing or communication devices, games, wireless post it notes, wireless memory media, RFID tags, vehicles, clothing, personal data assistants and navigation assistants.

17. (currently amended) A wireless portable device, comprising:

one or more antennas radiating or receiving electromagnetic energy at particular frequency bands, at least one of said one or more antennas radiating or receiving electromagnetic energy at a plurality of particular frequency bands;

one or more components selected from the group consisting of receivers, transmitters and transceivers, said one or more components connected to said at least one of said one or more antennas, whereby

at least one of said one or more components transmits or receives electromagnetic energy simultaneously at two or more of said plurality of particular frequency bands, or

two or more components transmit or receive electromagnetic energy at two or more of said plurality of particular frequency bands.

18. (Original) The wireless portable device of claim 17 wherein said wireless portable device is selected from the group consisting of computers, telephones, personal data assistants, and navigation assistants.

19. (Original) The wireless portable device of claim 17 further comprising one or more tuners which match electromagnetic energy at a particular frequency band to only one of said one or more components.

20. (Original) The wireless portable device of claim 17 further comprising isolation means for isolating said one or more components from more than one particular frequency band of said plurality of frequency bands.

21. (Currently amended) A wireless device component, comprising a tuner or a set of tuners or controller or other circuitry configurable to be coupled to at least one antenna and a plurality of transmitters, receivers, or transceivers that operate at one or more frequency bands, wherein said at least one antenna is used by said plurality of transmitters, receivers or transceivers in a plurality of different bands, wherein said at least one antenna is one or more of

a) an actively tuned antenna, and

b) is tuned by one or more passive elements which are selected or interconnected using electronic control.

REMARKS

Claim 8 has been amended to correct grammatical errors, but remains substantively unchanged. To accelerate prosecution to grant, features of claims 2 and 3 have been incorporated into claim 1. Similarly, features of claims 11 and 12 have been incorporated into claim 8, and the same amendments have been made to claim 21. Claims 2, 3, 11, and 12 have been canceled. Claims 14 and 17 have been amended to require "simultaneously". Claims 1, 4-10, and 13-21 remain in the application.

It appears that the Examiner has missed the main feature of the patent application. Contrasting Figure 2 with Figure 1 of the application, it can be seen that Figure 2 shows the elimination of a number of antennas and permits the use of a single multiband antenna 28. As explained in the application on pages 1 and 2, the requirement of having different antennas for each different type of receiver, transmitter, or transceiver, puts considerable demands on the mechanical design of equipment, particularly, if the equipment is a small personal data assistant, mobile phone, or other device used to accomplish a variety of different tasks which require communicating at different frequencies.

For the Examiner's convenience, the applicant notes that each of independent claims 1, 8, 14, 17 and 21 are each directed to <u>wireless devices</u>, and either require "at least one antenna" or a "multiband antenna" where the antenna is used by a plurality of transmitters, receivers or transceivers <u>in a plurality of different bands</u> or includes a tuner which tunes the antenna to <u>a plurality of different bands</u> or which is used to receive electromagnetic energy in <u>a plurality of different bands</u>.

Claims 1-21 were rejected as being anticipated by U.S. Patent Publication 2003/0151556 to Cohen. This rejection is in error. While the Examiner takes the position that Cohen shows multiple transmitters, receivers or transceivers using one antenna operating in a plurality of different bands, this conclusion is wrong and is not supported by the Figures and textual passages cited by the Examiner. Cohen describes an antenna system which includes fractal antennas. With particular reference to Figure 8b (cited in the office action), there are shown several fractal antennas 510A-C (see paragraph [0080] and [0149]) which are fed

for vertical polarization for a vertical antenna element (see paragraph [0150]). The paragraphs [0147]-[0150] cited by the Examiner pertain, in one application, to a device which allows for signaling if a valuable property to which it is attached is moved unlawfully (see end of paragraph [0148]). Wholly absent from Cohen is any teaching or suggestion of having the antennas 510A-C function as multiband antennas to transmit and receive at different bands as required in the claims. In fact, so doing would appear to change the functionality of Cohen.

Claims 1, 2, 5-11, and 14-21 were rejected as being anticipated by U.S. Patent Publication 2008/0158081 to Rofougaran. This rejection is in error. While the Examiner takes the position that Rofougaran shows multiple transmitters, receivers or transceivers using one antenna operating in a plurality of different bands, this conclusion is wrong and is not supported by the Figures and textual passages cited by the Examiner. Rofougaran describes an adjustable integrated circuit antenna structure. Paragraph [0052], identified in the office action, makes clear that there are a plurality of antenna structures. With reference to Figure 1, each transceiver and functional circuit is paired with its own antenna structure 38, 40, 42, and 44. That is, as discussed in paragraph [0052] of Rofogouran, on a single package substrate, there may be several elements which operate at different frequencies, but each element is using its own antenna structure. At no point does Rofogouran describe having a single antenna receive or transmit at a plurality of different bands. Hence, Rofogouran wholly misses the concept of multiple tranceivers being able to operate at a plurality of different bands using a single antenna.

In the office action, it is noted that the Examiner does not identify an paragraph or component of either Cohen or Rofougaran which corresponds to having a single antenna operate in a plurality of different bands.

In view of the above, it is respectfully requested that the application be reconsidered, that claims 1, 4-10, and 13-21 be allowed, and that the application be passed to issue.

The undersigned has also reviewed the published application and notes that there are numerous printing errors in the published application. For example, the published application uses the term "hands" where the application as filed used the term "bands". In addition, in the printed publication, there appear to be a

number of insertions of a period where no period was present in the application. On issuance of the patent, correction of the printed text is requested.

Should the Examiner find the application to be other than in condition for allowance, the Examiner is requested to contact the undersigned at the local telephone number listed below to discuss any other changes deemed necessary in a telephonic or personal interview.

A provisional petition is hereby made for any extension of time necessary for the continued pendency during the life of this application. Please charge any fees for such provisional petition any deficiencies in fees, and credit any over payment of fees, to attorney's deposit account 50-2041.

Respectfully submitted,

Michael E. Whitham
Reg. No. 32,635

Whitham, Curtis, Christofferson & Whitham, P.C.
11491 Sunset Hills Road, Suite 340
Reston, VA 20190

Tel. (703) 787-9400
Fax. (703) 787-7557

Customer No.: 30743

Electronic Patent Application Fee Transmittal

Application Number:	12541764
Filing Date:	14-Aug-2009
Title of Invention:	ACTIVE ANTENNAS FOR MULTIPLE BANDS IN WIRELESS PORTABLE DEVICES
First Named Inventor/Applicant Name:	Theodore S. Rappaport
Filer:	Michael E. Whitham
Attorney Docket Number:	08610010AA

Filed as Small Entity

Utility under 35 USC 111(a) Filing Fees

Description	Fee Code	Quantity	Amount	Sub-Total in USD($)
Basic Filing:				
Pages:				
Claims:				
Miscellaneous-Filing:				
Petition:				
Patent-Appeals-and-Interference:				
Post-Allowance-and-Post-Issuance:				
Extension-of-Time:				
Extension - 2 months with $0 paid	2252	1	280	280

Description	Fee Code	Quantity	Amount	Sub-Total in USD($)
Miscellaneous:				
			Total in USD ($)	**280**

Electronic Acknowledgement Receipt

EFS ID:	13265330
Application Number:	12541764
International Application Number:	
Confirmation Number:	4086
Title of Invention:	ACTIVE ANTENNAS FOR MULTIPLE BANDS IN WIRELESS PORTABLE DEVICES
First Named Inventor/Applicant Name:	Theodore S. Rappaport
Customer Number:	30743
Filer:	Michael E. Whitham
Filer Authorized By:	
Attorney Docket Number:	08610010AA
Receipt Date:	16-JUL-2012
Filing Date:	14-AUG-2009
Time Stamp:	19:46:55
Application Type:	Utility under 35 USC 111(a)

Payment information:

Submitted with Payment	yes
Payment Type	Deposit Account
Payment was successfully received in RAM	$280
RAM confirmation Number	6777
Deposit Account	502041
Authorized User	

The Director of the USPTO is hereby authorized to charge indicated fees and credit any overpayment as follows:

Charge any Additional Fees required under 37 C.F.R. Section 1.16 (National application filing, search, and examination fees)

Charge any Additional Fees required under 37 C.F.R. Section 1.17 (Patent application and reexamination processing fees)

Charge any Additional Fees required under 37 C.F.R. Section 1.19 (Document supply fees)

Charge any Additional Fees required under 37 C.F.R. Section 1.20 (Post Issuance fees)

Charge any Additional Fees required under 37 C.F.R. Section 1.21 (Miscellaneous fees and charges)

File Listing:

Document Number	Document Description	File Name	File Size(Bytes)/ Message Digest	Multi Part /.zip	Pages (if appl.)
1		08610010aares1.pdf	58677 e6a77ddb1130eab28352b302f69b77c1d03566f2	yes	8

Multipart Description/PDF files in .zip description		
Document Description	**Start**	**End**
Amendment/Req. Reconsideration-After Non-Final Reject	1	1
Claims	2	5
Applicant Arguments/Remarks Made in an Amendment	6	8

Warnings:

Information:

2	Fee Worksheet (SB06)	fee-info.pdf	30606 a74225a45b41d5c823ff49289f18df6aff4a3d4f	no	2

Warnings:

Information:

Total Files Size (in bytes):	89283

This Acknowledgement Receipt evidences receipt on the noted date by the USPTO of the indicated documents, characterized by the applicant, and including page counts, where applicable. It serves as evidence of receipt similar to a Post Card, as described in MPEP 503.

New Applications Under 35 U.S.C. 111
If a new application is being filed and the application includes the necessary components for a filing date (see 37 CFR 1.53(b)-(d) and MPEP 506), a Filing Receipt (37 CFR 1.54) will be issued in due course and the date shown on this Acknowledgement Receipt will establish the filing date of the application.

National Stage of an International Application under 35 U.S.C. 371
If a timely submission to enter the national stage of an international application is compliant with the conditions of 35 U.S.C. 371 and other applicable requirements a Form PCT/DO/EO/903 indicating acceptance of the application as a national stage submission under 35 U.S.C. 371 will be issued in addition to the Filing Receipt, in due course.

New International Application Filed with the USPTO as a Receiving Office
If a new international application is being filed and the international application includes the necessary components for an international filing date (see PCT Article 11 and MPEP 1810), a Notification of the International Application Number and of the International Filing Date (Form PCT/RO/105) will be issued in due course, subject to prescriptions concerning national security, and the date shown on this Acknowledgement Receipt will establish the international filing date of the application.

PTO/SB/06 (07-06)
Approved for use through 1/31/2007. OMB 0651-0032
U.S. Patent and Trademark Office; U.S. DEPARTMENT OF COMMERCE
Under the Paperwork Reduction Act of 1995, no persons are required to respond to a collection of information unless it displays a valid OMB control number.

PATENT APPLICATION FEE DETERMINATION RECORD

Substitute for Form PTO-875

Application or Docket Number	Filing Date	☐ To be Mailed
12/541,764	08/14/2009	

APPLICATION AS FILED – PART I

FOR	(Column 1) NUMBER FILED	(Column 2) NUMBER EXTRA	SMALL ENTITY ☒ RATE ($)	SMALL ENTITY FEE ($)	OR	OTHER THAN SMALL ENTITY RATE ($)	OTHER THAN SMALL ENTITY FEE ($)
☐ BASIC FEE (37 CFR 1.16(a), (b), or (c))	N/A	N/A	N/A			N/A	
☐ SEARCH FEE (37 CFR 1.16(k), (i), or (m))	N/A	N/A	N/A			N/A	
☐ EXAMINATION FEE (37 CFR 1.16(o), (p), or (q))	N/A	N/A	N/A			N/A	
TOTAL CLAIMS (37 CFR 1.16(i))	minus 20 =	*	X $ =		OR	X $ =	
INDEPENDENT CLAIMS (37 CFR 1.16(h))	minus 3 =	*	X $ =			X $ =	
☐ APPLICATION SIZE FEE (37 CFR 1.16(s))	If the specification and drawings exceed 100 sheets of paper, the application size fee due is $250 ($125 for small entity) for each additional 50 sheets or fraction thereof. See 35 U.S.C. 41(a)(1)(G) and 37 CFR 1.16(s).						
☐ MULTIPLE DEPENDENT CLAIM PRESENT (37 CFR 1.16(j))							
* If the difference in column 1 is less than zero, enter "0" in column 2.			TOTAL			TOTAL	

APPLICATION AS AMENDED – PART II

AMENDMENT 07/16/2012

	(Column 1) CLAIMS REMAINING AFTER AMENDMENT		(Column 2) HIGHEST NUMBER PREVIOUSLY PAID FOR	(Column 3) PRESENT EXTRA	SMALL ENTITY RATE ($)	SMALL ENTITY ADDITIONAL FEE ($)	OR	OTHER THAN SMALL ENTITY RATE ($)	OTHER THAN SMALL ENTITY ADDITIONAL FEE ($)
Total (37 CFR 1.16(i))	* 17	Minus	** 21	= 0	X $30 =	0	OR	X $ =	
Independent (37 CFR 1.16(h))	* 5	Minus	***6	= 0	X $125 =	0	OR	X $ =	
☐ Application Size Fee (37 CFR 1.16(s))									
☐ FIRST PRESENTATION OF MULTIPLE DEPENDENT CLAIM (37 CFR 1.16(j))							OR		
					TOTAL ADD'L FEE	0	OR	TOTAL ADD'L FEE	

AMENDMENT

	(Column 1) CLAIMS REMAINING AFTER AMENDMENT		(Column 2) HIGHEST NUMBER PREVIOUSLY PAID FOR	(Column 3) PRESENT EXTRA	RATE ($)	ADDITIONAL FEE ($)		RATE ($)	ADDITIONAL FEE ($)
Total (37 CFR 1.16(i))	*	Minus	**	=	X $ =		OR	X $ =	
Independent (37 CFR 1.16(h))	*	Minus	***	=	X $ =		OR	X $ =	
☐ Application Size Fee (37 CFR 1.16(s))									
☐ FIRST PRESENTATION OF MULTIPLE DEPENDENT CLAIM (37 CFR 1.16(j))							OR		
					TOTAL ADD'L FEE		OR	TOTAL ADD'L FEE	

* If the entry in column 1 is less than the entry in column 2, write "0" in column 3.
** If the "Highest Number Previously Paid For" IN THIS SPACE is less than 20, enter "20".
*** If the "Highest Number Previously Paid For" IN THIS SPACE is less than 3, enter "3".
The "Highest Number Previously Paid For" (Total or Independent) is the highest number found in the appropriate box in column 1.

Legal Instrument Examiner:
/LINDA HUMES/

This collection of information is required by 37 CFR 1.16. The information is required to obtain or retain a benefit by the public which is to file (and by the USPTO to process) an application. Confidentiality is governed by 35 U.S.C. 122 and 37 CFR 1.14. This collection is estimated to take 12 minutes to complete, including gathering, preparing, and submitting the completed application form to the USPTO. Time will vary depending upon the individual case. Any comments on the amount of time you require to complete this form and/or suggestions for reducing this burden, should be sent to the Chief Information Officer, U.S. Patent and Trademark Office, U.S. Department of Commerce, P.O. Box 1450, Alexandria, VA 22313-1450. DO NOT SEND FEES OR COMPLETED FORMS TO THIS ADDRESS. **SEND TO: Commissioner for Patents, P.O. Box 1450, Alexandria, VA 22313-1450.**
If you need assistance in completing the form, call 1-800-PTO-9199 and select option 2.

UNITED STATES PATENT AND TRADEMARK OFFICE

UNITED STATES DEPARTMENT OF COMMERCE
United States Patent and Trademark Office
Address: COMMISSIONER FOR PATENTS
P.O. Box 1450
Alexandria, Virginia 22313-1450
www.uspto.gov

APPLICATION NO.	FILING DATE	FIRST NAMED INVENTOR	ATTORNEY DOCKET NO.	CONFIRMATION NO.
12/541,764	08/14/2009	Theodore S. Rappaport	08610010AA	4086

30743 7590 02/16/2012
WHITHAM, CURTIS & CHRISTOFFERSON & COOK, P.C.
11491 SUNSET HILLS ROAD
SUITE 340
RESTON, VA 20190

EXAMINER
PHAN, THO GIA

ART UNIT	PAPER NUMBER
2821	

MAIL DATE	DELIVERY MODE
02/16/2012	PAPER

Please find below and/or attached an Office communication concerning this application or proceeding.

The time period for reply, if any, is set in the attached communication.

Office Action Summary	Application No.	Applicant(s)	
	12/541,764	RAPPAPORT, THEODORE S.	
	Examiner	Art Unit	
	THO G. PHAN	2821	

-- The MAILING DATE of this communication appears on the cover sheet with the correspondence address --

Period for Reply

A SHORTENED STATUTORY PERIOD FOR REPLY IS SET TO EXPIRE 3 MONTH(S) OR THIRTY (30) DAYS, WHICHEVER IS LONGER, FROM THE MAILING DATE OF THIS COMMUNICATION.

- Extensions of time may be available under the provisions of 37 CFR 1.136(a). In no event, however, may a reply be timely filed after SIX (6) MONTHS from the mailing date of this communication.
- If NO period for reply is specified above, the maximum statutory period will apply and will expire SIX (6) MONTHS from the mailing date of this communication.
- Failure to reply within the set or extended period for reply will, by statute, cause the application to become ABANDONED (35 U.S.C. § 133). Any reply received by the Office later than three months after the mailing date of this communication, even if timely filed, may reduce any earned patent term adjustment. See 37 CFR 1.704(b).

Status

1)☒ Responsive to communication(s) filed on *14 August 2009*.

2a)☐ This action is **FINAL**. 2b)☒ This action is non-final.

3)☐ An election was made by the applicant in response to a restriction requirement set forth during the interview on _____; the restriction requirement and election have been incorporated into this action.

4)☐ Since this application is in condition for allowance except for formal matters, prosecution as to the merits is closed in accordance with the practice under *Ex parte Quayle*, 1935 C.D. 11, 453 O.G. 213.

Disposition of Claims

5)☒ Claim(s) *1-21* is/are pending in the application.

5a) Of the above claim(s) _____ is/are withdrawn from consideration.

6)☐ Claim(s) _____ is/are allowed.

7)☒ Claim(s) *1-21* is/are rejected.

8)☐ Claim(s) _____ is/are objected to.

9)☐ Claim(s) _____ are subject to restriction and/or election requirement.

Application Papers

10)☐ The specification is objected to by the Examiner.

11)☒ The drawing(s) filed on *14 August 2009* is/are: a)☒ accepted or b)☐ objected to by the Examiner.

Applicant may not request that any objection to the drawing(s) be held in abeyance. See 37 CFR 1.85(a).

Replacement drawing sheet(s) including the correction is required if the drawing(s) is objected to. See 37 CFR 1.121(d).

12)☐ The oath or declaration is objected to by the Examiner. Note the attached Office Action or form PTO-152.

Priority under 35 U.S.C. § 119

13)☐ Acknowledgment is made of a claim for foreign priority under 35 U.S.C. § 119(a)-(d) or (f).

a)☐ All b)☐ Some * c)☐ None of:

1.☐ Certified copies of the priority documents have been received.

2.☐ Certified copies of the priority documents have been received in Application No. _____.

3.☐ Copies of the certified copies of the priority documents have been received in this National Stage application from the International Bureau (PCT Rule 17.2(a)).

* See the attached detailed Office action for a list of the certified copies not received.

Attachment(s)

1) ☒ Notice of References Cited (PTO-892)
2) ☐ Notice of Draftsperson's Patent Drawing Review (PTO-948)
3) ☐ Information Disclosure Statement(s) (PTO/SB/08) Paper No(s)/Mail Date _____.
4) ☐ Interview Summary (PTO-413) Paper No(s)/Mail Date. _____ .
5) ☐ Notice of Informal Patent Application
6) ☐ Other: _____.

DETAILED ACTION

Claim Rejections - 35 USC § 102

The following is a quotation of the appropriate paragraphs of 35 U.S.C. 102 that form the basis for the rejections under this section made in this Office action:

> (b) the invention was patented or described in a printed publication in this or a foreign country or in public use or on sale in this country, more than one year prior to the date of application for patent in the United States.
> (e) the invention was described in (1) an application for patent, published under section 122(b), by another filed in the United States before the invention by the applicant for patent or (2) a patent granted on an application for patent by another filed in the United States before the invention by the applicant for patent, except that an international application filed under the treaty defined in section 351(a) shall have the effects for purposes of this subsection of an application filed in the United States only if the international application designated the United States and was published under Article 21(2) of such treaty in the English language.

1. Claims 1-21 are rejected under 35 U.S.C. 102(b) as being anticipated by Cohen (US 2003/0151556 A1).

Cohen in figures 8-15 discloses a wireless device comprising one or more antennas 510A-D; a plurality of transmitters, receivers or transceivers 500,600 that operate in one or more frequency bands, wherein at least one antenna of the one or more antennas is used by the plurality of transmitters, receivers or transceivers in a plurality of different bands (paragraphs 147-150); wherein the at least one antenna is an actively tuned antenna (paragraph 36); wherein the at least one antenna is tuned by one or more passive elements which are selected or interconnected using electronic control; wherein the passive elements are comprised of either or both lumped or distributed elements (abstract, paragraphs 79, 87, 112, 148, 208); at a particular operating frequency bands, the at least one antenna is used for transmitting, receiving,

or transmitting and receiving simultaneously in the plurality of different bands; one or more tuners associated with one or more transmitters, receivers or transceivers of the plurality of transmitters, receivers or transceivers (abstract, paragraphs 36, 79, 87, 112); and a controller 620 for controlling tuning of the tuner for the at least one antenna to operate in the plurality of different bands; and wherein the mobile device is selected from tile group consisting of computers, telephones, portable computing or communication devices, games, wireless post it notes, wireless memory media, RFID tags, vehicles, clothing, personal data assistants and navigation assistants (figure 8).

2. Claims 1-2, 5-11 and 14-21 are rejected under 35 U.S.C. 102(e) as being anticipated by Rofougaran (US 2008/0158081 A1).

Rofougaran in figures 1-18 discloses a wireless device comprising one or more antennas 38,40,42,44; a plurality of transmitters, receivers or transceivers 46,48,50,52 that operate in one or more frequency bands, wherein at least one antenna of the one or more antennas is used by the plurality of transmitters, receivers or transceivers in a plurality of different bands; wherein the at least one antenna is an actively tuned antenna; wherein the at least one antenna is used for transmitting, receiving, or transmitting and receiving simultaneously in the plurality of different bands (paragraph 52); one or more tuners associated with one or more transmitters, receivers or transceivers of the plurality of transmitters, receivers or transceivers (paragraph 8); and a controller 440 for controlling tuning of the tuner for the at least one antenna to operate in the plurality of different bands; and wherein the mobile device is selected

from tile group consisting of computers, telephones, portable computing or communication devices, games, wireless post it notes, wireless memory media, RFID tags, vehicles, clothing, personal data assistants and navigation assistants.

Conclusion

3. The prior art made of record and not relied upon is considered pertinent to applicant's disclosure. The patents to Rambo, Elliot and Siegler et al. are cited as of interested and illustrated a similar structure to a wireless portable device.

Any inquiry concerning this communication or earlier communications from the examiner should be directed to Tho G. Phan whose telephone number is 571-272-1826. The examiner can normally be reached on M-F, 9:30-6:00.

If attempts to reach the examiner by telephone are unsuccessful, the examiner's supervisor, Jacob Choi can be reached on (571) 272-2367. The fax phone number for the organization where this application or proceeding is assigned is 703-872-9306.

Information regarding the status of an application may be obtained from the Patent Application Information Retrieval (PAIR) system. Status information for published applications may be obtained from either Private PAIR or Public PAIR. Status information for unpublished applications is available through Private PAIR only. For more information about the PAIR system, see http://pair-direct.uspto.gov. Should you have questions on access to the Private PAIR system, contact the Electronic Business Center (EBC) at 866-217-9197 (toll-free).

/THO G PHAN/
Primary Examiner, Art Unit 2821

Notice of References Cited	Application/Control No. 12/541,764	Applicant(s)/Patent Under Reexamination RAPPAPORT, THEODORE S.	
	Examiner THO G. PHAN	Art Unit 2821	Page 1 of 1

U.S. PATENT DOCUMENTS

*		Document Number Country Code-Number-Kind Code	Date MM-YYYY	Name	Classification
*	A	US-4,499,606 A	02-1985	Rambo, William R.	455/277.2
*	B	US-2003/0151556 A1	08-2003	Cohen, Nathan	343/700.0MS
*	C	US-6,693,600 B1	02-2004	Elliot, Paul G.	343/773
*	D	US-7,088,299 B2	08-2006	Siegler et al.	343/745
*	E	US-2008/0158081 A1	07-2008	Rofougaran, Ahmadreza (Reza)	343/787
	F	US-			
	G	US-			
	H	US-			
	I	US-			
	J	US-			
	K	US-			
	L	US-			
	M	US-			

FOREIGN PATENT DOCUMENTS

*		Document Number Country Code-Number-Kind Code	Date MM-YYYY	Country	Name	Classification
	N					
	O					
	P					
	Q					
	R					
	S					
	T					

NON-PATENT DOCUMENTS

*		Include as applicable: Author, Title Date, Publisher, Edition or Volume, Pertinent Pages)
	U	
	V	
	W	
	X	

*A copy of this reference is not being furnished with this Office action. (See MPEP § 707.05(a).)
Dates in MM-YYYY format are publication dates. Classifications may be US or foreign.

Search Notes	Application/Control No.	Applicant(s)/Patent Under Reexamination
	12541764	RAPPAPORT, THEODORE S.
	Examiner	**Art Unit**
	DAVID G PHAN	2821

SEARCHED

Class	Subclass	Date	Examiner
343	702,745	2/13/2012	tp

SEARCH NOTES

Search Notes	Date	Examiner
search history attached	2/13/2012	tp

INTERFERENCE SEARCH

Class	Subclass	Date	Examiner
search history attached	search history attached	2/13/2012	tp

EAST Search History

EAST Search History (Prior Art)

Ref #	Hits	Search Query	DBs	Default Operator	Plurals	Time Stamp
L1	2	"20100060531"	US-PGPUB; USPAT; USOCR; FPRS; EPO; JPO; DERWENT; IBM_TDB	OR	ON	2012/02/13 09:46
L2	1778777	transmitter or receiver or transceiver	US-PGPUB; USPAT; USOCR; FPRS; EPO; JPO; DERWENT; IBM_TDB	OR	ON	2012/02/13 09:51
L3	714240	antenna	US-PGPUB; USPAT; USOCR; FPRS; EPO; JPO; DERWENT; IBM_TDB	OR	ON	2012/02/13 09:51
L4	924603	tun$3	US-PGPUB; USPAT; USOCR; FPRS; EPO; JPO; DERWENT; IBM_TDB	OR	ON	2012/02/13 09:51
L5	12747426	control$4	US-PGPUB; USPAT; USOCR; FPRS; EPO; JPO; DERWENT; IBM_TDB	OR	ON	2012/02/13 09:52
L6	1656137	band	US-PGPUB; USPAT; USOCR; FPRS; EPO; JPO; DERWENT; IBM_TDB	OR	ON	2012/02/13 09:52
L7	401	2 3 4 5 6	US-PGPUB; USPAT; USOCR; FPRS; EPO; JPO; DERWENT; IBM_TDB	WITH	ON	2012/02/13 09:53
L9	4144	2 3 4 5 6	US-PGPUB; USPAT; USOCR; FPRS; EPO; JPO; DERWENT; IBM_TDB	SAME	ON	2012/02/13 09:55
L10	595954	parasitic or passive	US-PGPUB; USPAT; USOCR; FPRS; EPO; JPO; DERWENT; IBM_TDB	SAME	ON	2012/02/13 09:56
L11	1028564	wireless	US-PGPUB; USPAT; USOCR; FPRS; EPO; JPO; DERWENT; IBM_TDB	SAME	ON	2012/02/13 09:56

L12	11	9 10 11	US-PGPUB; USPAT; USOCR; FPRS; EPO; JPO; DERWENT; IBM_TDB	SAME	ON	2012/02/13 09:56
L13	71	9 10	US-PGPUB; USPAT; USOCR; FPRS; EPO; JPO; DERWENT; IBM_TDB	SAME	ON	2012/02/13 09:56
L14	176	9 11	US-PGPUB; USPAT; USOCR; FPRS; EPO; JPO; DERWENT; IBM_TDB	SAME	ON	2012/02/13 09:58
L15	84	(antenna and wireless and transmitters and bands and used and plurality and different).clm.	US-PGPUB; USPAT; USOCR; FPRS; EPO; JPO; DERWENT; IBM_TDB	OR	ON	2012/02/13 10:01
L16	29	(antenna and wireless and transmitters and bands and used and plurality and different and operate).clm.	US-PGPUB; USPAT; USOCR; FPRS; EPO; JPO; DERWENT; IBM_TDB	OR	ON	2012/02/13 10:01
L17	6389	343/702.ccls.	US-PGPUB; USPAT; USOCR; FPRS; EPO; JPO; DERWENT; IBM_TDB	SAME	ON	2012/02/13 10:02
L18	693	343/745.ccls.	US-PGPUB; USPAT; USOCR; FPRS; EPO; JPO; DERWENT; IBM_TDB	SAME	ON	2012/02/13 10:02

2/13/2012 2:51:32 PM
C:\Users\tphan1\Documents\EAST\Workspaces\12-541,764.wsp

UNITED STATES PATENT AND TRADEMARK OFFICE

UNITED STATES DEPARTMENT OF COMMERCE
United States Patent and Trademark Office
Address: COMMISSIONER FOR PATENTS
P.O. Box 1450
Alexandria, Virginia 22313-1450
www.uspto.gov

APPLICATION NUMBER	FILING OR 371(C) DATE	FIRST NAMED APPLICANT	ATTY. DOCKET NO./TITLE
12/541,764	08/14/2009	Theodore S. Rappaport	08610010AA

CONFIRMATION NO. 4086

PUBLICATION NOTICE

OC000000040543771

30743
WHITHAM, CURTIS & CHRISTOFFERSON & COOK, P.C.
11491 SUNSET HILLS ROAD
SUITE 340
RESTON, VA 20190

Title:ACTIVE ANTENNAS FOR MULTIPLE BANDS IN WIRELESS PORTABLE DEVICES

Publication No.US-2010-0060531-A1
Publication Date:03/11/2010

NOTICE OF PUBLICATION OF APPLICATION

The above-identified application will be electronically published as a patent application publication pursuant to 37 CFR 1.211, et seq. The patent application publication number and publication date are set forth above.

The publication may be accessed through the USPTO's publically available Searchable Databases via the Internet at www.uspto.gov. The direct link to access the publication is currently http://www.uspto.gov/patft/.

The publication process established by the Office does not provide for mailing a copy of the publication to applicant. A copy of the publication may be obtained from the Office upon payment of the appropriate fee set forth in 37 CFR 1.19(a)(1). Orders for copies of patent application publications are handled by the USPTO's Office of Public Records. The Office of Public Records can be reached by telephone at (703) 308-9726 or (800) 972-6382, by facsimile at (703) 305-8759, by mail addressed to the United States Patent and Trademark Office, Office of Public Records, Alexandria, VA 22313-1450 or via the Internet.

In addition, information on the status of the application, including the mailing date of Office actions and the dates of receipt of correspondence filed in the Office, may also be accessed via the Internet through the Patent Electronic Business Center at www.uspto.gov using the public side of the Patent Application Information and Retrieval (PAIR) system. The direct link to access this status information is currently http://pair.uspto.gov/. Prior to publication, such status information is confidential and may only be obtained by applicant using the private side of PAIR.

Further assistance in electronically accessing the publication, or about PAIR, is available by calling the Patent Electronic Business Center at 1-866-217-9197.

Office of Data Managment, Application Assistance Unit (571) 272-4000, or (571) 272-4200, or 1-888-786-0101

UNITED STATES PATENT AND TRADEMARK OFFICE

UNITED STATES DEPARTMENT OF COMMERCE
United States Patent and Trademark Office
Address: COMMISSIONER FOR PATENTS
P.O. Box 1450
Alexandria, Virginia 22313-1450
www.uspto.gov

APPLICATION NUMBER	FILING or 371(c) DATE	GRP ART UNIT	FIL FEE REC'D	ATTY.DOCKET.NO	TOT CLAIMS	IND CLAIMS
12/541,764	08/14/2009	2821	773	08610010AA	21	5

CONFIRMATION NO. 4086

UPDATED FILING RECEIPT

OC000000038998838

30743
WHITHAM, CURTIS & CHRISTOFFERSON & COOK, P.C.
11491 SUNSET HILLS ROAD
SUITE 340
RESTON, VA 20190

Date Mailed: 11/30/2009

Receipt is acknowledged of this non-provisional patent application. The application will be taken up for examination in due course. Applicant will be notified as to the results of the examination. Any correspondence concerning the application must include the following identification information: the U.S. APPLICATION NUMBER, FILING DATE, NAME OF APPLICANT, and TITLE OF INVENTION. Fees transmitted by check or draft are subject to collection. Please verify the accuracy of the data presented on this receipt. **If an error is noted on this Filing Receipt, please submit a written request for a Filing Receipt Correction. Please provide a copy of this Filing Receipt with the changes noted thereon. If you received a "Notice to File Missing Parts" for this application, please submit any corrections to this Filing Receipt with your reply to the Notice. When the USPTO processes the reply to the Notice, the USPTO will generate another Filing Receipt incorporating the requested corrections**

Applicant(s)

Theodore S. Rappaport, Austin, TX;

Power of Attorney:
Charles Whitham--22424
Michael Whitham--32635
Marshall Curtis--33138
Clyde Christofferson--34138

Domestic Priority data as claimed by applicant

This appln claims benefit of 61/088,829 08/14/2008

Foreign Applications

If Required, Foreign Filing License Granted: 09/04/2009

The country code and number of your priority application, to be used for filing abroad under the Paris Convention, is **US 12/541,764**

Projected Publication Date: 03/11/2010

Non-Publication Request: No

Early Publication Request: No
**** SMALL ENTITY ****

Title

ACTIVE ANTENNAS FOR MULTIPLE BANDS IN WIRELESS PORTABLE DEVICES

Preliminary Class

343

PROTECTING YOUR INVENTION OUTSIDE THE UNITED STATES

Since the rights granted by a U.S. patent extend only throughout the territory of the United States and have no effect in a foreign country, an inventor who wishes patent protection in another country must apply for a patent in a specific country or in regional patent offices. Applicants may wish to consider the filing of an international application under the Patent Cooperation Treaty (PCT). An international (PCT) application generally has the same effect as a regular national patent application in each PCT-member country. The PCT process **simplifies** the filing of patent applications on the same invention in member countries, but **does not result** in a grant of "an international patent" and does not eliminate the need of applicants to file additional documents and fees in countries where patent protection is desired.

Almost every country has its own patent law, and a person desiring a patent in a particular country must make an application for patent in that country in accordance with its particular laws. Since the laws of many countries differ in various respects from the patent law of the United States, applicants are advised to seek guidance from specific foreign countries to ensure that patent rights are not lost prematurely.

Applicants also are advised that in the case of inventions made in the United States, the Director of the USPTO must issue a license before applicants can apply for a patent in a foreign country. The filing of a U.S. patent application serves as a request for a foreign filing license. The application's filing receipt contains further information and guidance as to the status of applicant's license for foreign filing.

Applicants may wish to consult the USPTO booklet, "General Information Concerning Patents" (specifically, the section entitled "Treaties and Foreign Patents") for more information on timeframes and deadlines for filing foreign patent applications. The guide is available either by contacting the USPTO Contact Center at 800-786-9199, or it can be viewed on the USPTO website at http://www.uspto.gov/web/offices/pac/doc/general/index.html.

For information on preventing theft of your intellectual property (patents, trademarks and copyrights), you may wish to consult the U.S. Government website, http://www.stopfakes.gov. Part of a Department of Commerce initiative, this website includes self-help "toolkits" giving innovators guidance on how to protect intellectual property in specific countries such as China, Korea and Mexico. For questions regarding patent enforcement issues, applicants may call the U.S. Government hotline at 1-866-999-HALT (1-866-999-4158).

LICENSE FOR FOREIGN FILING UNDER

Title 35, United States Code, Section 184

Title 37, Code of Federal Regulations, 5.11 & 5.15

GRANTED

The applicant has been granted a license under 35 U.S.C. 184, if the phrase "IF REQUIRED, FOREIGN FILING LICENSE GRANTED" followed by a date appears on this form. Such licenses are issued in all applications where the conditions for issuance of a license have been met, regardless of whether or not a license may be required as

set forth in 37 CFR 5.15. The scope and limitations of this license are set forth in 37 CFR 5.15(a) unless an earlier license has been issued under 37 CFR 5.15(b). The license is subject to revocation upon written notification. The date indicated is the effective date of the license, unless an earlier license of similar scope has been granted under 37 CFR 5.13 or 5.14.

This license is to be retained by the licensee and may be used at any time on or after the effective date thereof unless it is revoked. This license is automatically transferred to any related applications(s) filed under 37 CFR 1.53(d). This license is not retroactive.

The grant of a license does not in any way lessen the responsibility of a licensee for the security of the subject matter as imposed by any Government contract or the provisions of existing laws relating to espionage and the national security or the export of technical data. Licensees should apprise themselves of current regulations especially with respect to certain countries, of other agencies, particularly the Office of Defense Trade Controls, Department of State (with respect to Arms, Munitions and Implements of War (22 CFR 121-128)); the Bureau of Industry and Security, Department of Commerce (15 CFR parts 730-774); the Office of Foreign AssetsControl, Department of Treasury (31 CFR Parts 500+) and the Department of Energy.

NOT GRANTED

No license under 35 U.S.C. 184 has been granted at this time, if the phrase "IF REQUIRED, FOREIGN FILING LICENSE GRANTED" DOES NOT appear on this form. Applicant may still petition for a license under 37 CFR 5.12, if a license is desired before the expiration of 6 months from the filing date of the application. If 6 months has lapsed from the filing date of this application and the licensee has not received any indication of a secrecy order under 35 U.S.C. 181, the licensee may foreign file the application pursuant to 37 CFR 5.15(b).

Response To Notice To File Missing Parts Of Application Filing Date Granted (PTO-1533)(Small Entity)	Docket No. 08610010AA

In Re Application Of: **THEODORE S. RAPPAPORT**

Application No.	Filing Date	Examiner	Customer No.	Group Art Unit	Confirmation No.
12/541,764	08/14/2009	not yet assigned	30743	not yet assigne	4086

Invention: **ACTIVE ANTENNAS FOR MULTIPLE BANDS IN WIRELESS PORTABLE DEVICES**

Mail Stop Missing Parts

COMMISSIONER FOR PATENTS:

This is a response to the Notice to File Missing Parts of Application - Filing Date Granted (PTO-1533) mailed on **September 11, 2009**
Date

Enclosed herewith for filing are the following:

- ☒ A copy of the Notice to File Missing Parts of Application - Filing Date Granted (PTO-1533). **(REQUIRED)**
- ☐ An oath or declaration in compliance with 37 CFR 1.63, including residence information and identifying the application by the above Application Number and Filing Date.
- ☒ A properly signed oath or declaration in compliance with 37 CFR 1.63.
- ☐ An oath or declaration in compliance with 37 CFR 1.63 listing the names of all inventors and signed by the omitted inventor(s), identifying this application by the above Application Number and Filing Date.
- ☐ A verified English translation of the non-English language application papers as originally filed. It is requested that this translation be used as the copy for examination purposes in the United States Patent and Trademark Office.
- ☐ _____ verified small entity declaration(s)
  - ☐ is/are attached.
  - ☐ was/were filed on _____
- ☐ A separate request for refund.
- ☒ Other (list):

Formal drawings Figures 1-6C (3 sheets)

Samsung Ex. 1002, Page 56 of 109

Response To Notice To File Missing Parts Of Application Filing Date Granted (PTO-1533)(Small Entity)	Docket No. 08610010AA

In Re Application Of:
THEODORE S. RAPPAPORT

Application No.	Filing Date	Examiner	Customer No.	Group Art Unit	Confirmation No.
12/541,764	08/14/2009	not yet assigned	30743	not yet assigne	4086

Invention: ACTIVE ANTENNAS FOR MULTIPLE BANDS IN WIRELESS PORTABLE DEVICES

TO THE COMMISSIONER FOR PATENTS:

Mail Stop Missing Parts

☒ Completion of application fees as calculated below:

☒ Utility application basic fee		$82.00
☐ Design application basic fee		
☒ Search Fee		$270.00
☒ Examination Fee		$110.00
☒ Total number of independent claims =	5	$220.00
☒ Total number of claims =	21	$26.00
☐ Multiple dependent claims		
☒ Surcharge for late payment of filing fee and/or late filing of original declaration or oath		$65.00
☐ Petition and fee for filing by other than all the inventors or a person not the inventor		
☐ Fee for processing an application filed with a non-English language specification		
☐ Fee for processing and retention of application		
Total completion of application fees		$773.00

This is a request under the provisions of 37 CFR 1.136(a) to extend the period for filing a response to the above-identified Notice to File Missing Parts of Application. The requested extension is as follows (check time period desired). If an additional time extension is required, please consider this a petition therefor.

☒ One month ☐ Two months ☐ Three months ☐ Four months ☐ Five months

from: November 12, 2009 (Date) until: December 11, 2009 (Date)

Total time extension fees $65.00

Total fees due $838.00

Samsung Ex. 1002, Page 57 of 109

Response To Notice To File Missing Parts Of Application Filing Date Granted (PTO-1533) (Small Entity)	Docket No. 08610010AA

In Re Application Of: **THEODORE S. RAPPAPORT**

Application No.	Filing Date	Examiner	Customer No.	Group Art Unit	Confirmation No.
12/541,764	08/14/2009	not yet assigned	30743	not yet assigne	4086

Invention: **ACTIVE ANTENNAS FOR MULTIPLE BANDS IN WIRELESS PORTABLE DEVICES**

TO THE COMMISSIONER FOR PATENTS:

Mail Stop Missing Parts

The fee of $838.00 is to be paid as follows:

- ☐ A check in the amount of the fee is enclosed.
- ☒ The Director is hereby authorized to charge any fees which may be required, or credit any overpayment, to Deposit Account No. 502041
- ☒ If an additional extension of time is required, please consider this a petition therefor and charge any additional fees which may be required to Deposit Account No. 502041
- ☐ Payment by credit card. Form PTO-2038 is attached.

WARNING: Information on this form may become public. Credit card information should not be included on this form. Provide credit card information and authorization on PTO-2038.

Signature

Dated: November 11, 2009

Michael E. Whitham
Reg. No. 32,635
Whitham, Curtis, Christofferson & Cook, PC
11491 Sunset Hills Road, Suite 340
Reston, Virginia 20190
703-787-9400

I hereby certify that this correspondence is being deposited with the United States Postal Service with sufficient postage as first class mail in an envelope addressed to "Commissioner for Patents, P.O. Box 1450, Alexandria, VA 22313-1450" [37 CFR 1.8(a)] on

_____,
(Date)

Signature of Person Mailing Correspondence

Typed or Printed Name of Person Mailing Correspondence

cc:

Samsung Ex. 1002, Page 58 of 109

UNITED STATES PATENT AND TRADEMARK OFFICE

UNITED STATES DEPARTMENT OF COMMERCE
United States Patent and Trademark Office
Address: COMMISSIONER FOR PATENTS
P.O. Box 1450
Alexandria, Virginia 22313-1450
www.uspto.gov

APPLICATION NUMBER	FILING OR 371(C) DATE	FIRST NAMED APPLICANT	ATTY. DOCKET NO./TITLE
12/541,764	08/14/2009	Theodore S. Rappaport	08610010AA

CONFIRMATION NO. 4086

FORMALITIES LETTER

30743
WHITHAM, CURTIS & CHRISTOFFERSON & COOK, P.C.
11491 SUNSET HILLS ROAD
SUITE 340
RESTON, VA 20190

OC000000037710213

RECEIVED
SEP 14 2009
WHITHAM, CURTIS, CHRISTOFFERSON & COOK, P.C.

Date Mailed: 09/11/2009

NOTICE TO FILE MISSING PARTS OF NONPROVISIONAL APPLICATION

FILED UNDER 37 CFR 1.53(b)

Filing Date Granted

Items Required To Avoid Abandonment:

An application number and filing date have been accorded to this application. The item(s) indicated below, however, are missing. Applicant is given **TWO MONTHS** from the date of this Notice within which to file all required items and pay any fees required below to avoid abandonment. Extensions of time may be obtained by filing a petition accompanied by the extension fee under the provisions of 37 CFR 1.136(a).

- The statutory basic filing fee is missing.
  Applicant must submit $82 to complete the basic filing fee for a small entity.
- The oath or declaration is unsigned.

The application is informal since it does not comply with the regulations for the reason(s) indicated below.

The required item(s) identified below must be timely submitted to avoid abandonment:

- Replacement drawings in compliance with 37 CFR 1.84 and 37 CFR 1.121(d) are required. The drawings submitted are not acceptable because:
  - The drawings must be reasonably free from erasures and must be free from alterations, overwriting, interlineations, folds, and copy marks. See Figure(s) all.

Applicant is cautioned that correction of the above items may cause the specification and drawings page count to exceed 100 pages. If the specification and drawings exceed 100 pages, applicant will need to submit the required application size fee.

The applicant needs to satisfy supplemental fees problems indicated below.

The required item(s) identified below must be timely submitted to avoid abandonment:

- Additional claim fees of **$246** as a small entity, including any required multiple dependent claim fee, are required. Applicant must submit the additional claim fees or cancel the additional claims for which fees are due.
- To avoid abandonment, a surcharge (for late submission of filing fee, search fee, examination fee or oath or declaration) as set forth in 37 CFR 1.16(f) of **$65** for a small entity in compliance with 37 CFR 1.27, must be submitted with the missing items identified in this notice.

SUMMARY OF FEES DUE:

Total additional fee(s) required for this application is **$773** for a small entity

- **$82** Statutory basic filing fee.
- **$65** Surcharge.
- The application search fee has not been paid. Applicant must submit **$270** to complete the search fee.
- The application examination fee has not been paid. Applicant must submit **$110** to complete the examination fee for a small entity in compliance with 37 CFR 1.27.
- Total additional claim fee(s) for this application is **$246**
  - **$220** for **2** independent claims over 3.
  - **$26** for **1** total claims over 20.

Replies should be mailed to:

Mail Stop Missing Parts
Commissioner for Patents
P.O. Box 1450
Alexandria VA 22313-1450

Registered users of EFS-Web may alternatively submit their reply to this notice via EFS-Web.
https://sportal.uspto.gov/authenticate/AuthenticateUserLocalEPF.html

For more information about EFS-Web please call the USPTO Electronic Business Center at **1-866-217-9197** or visit our website at http://www.uspto.gov/ebc.

If you are not using EFS-Web to submit your reply, you must include a copy of this notice.

/ebanaybanay/

Office of Data Management, Application Assistance Unit (571) 272-4000, or (571) 272-4200, or 1-888-786-0101

Docket No.
05900006AA

Declaration and Power of Attorney For Patent Application

English Language Declaration

As a below named inventor, I hereby declare that:

My residence, post office address and citizenship are as stated below next to my name,

I believe I am the original, first and sole inventor (if only one name is listed below) or an original, first and joint inventor (if plural names are listed below) of the subject matter which is claimed and for which a patent is sought on the invention entitled

ACTIVE ANTENNAS FOR MULTIPLE BANDS IN WIRELESS PORTABLE DEVICES

the specification of which

(check one)

☒ is attached hereto.

☐ was filed on _____ as United States Application No. or PCT International Application Number _____ and was amended on _____

(if applicable)

I hereby state that I have reviewed and understand the contents of the above identified specification, including the claims, as amended by any amendment referred to above.

I acknowledge the duty to disclose information which is material to patentability as defined in 37 CFR 1.56, including for continuation-in-part applications, material information which became available between the filing date of the prior application and the national or PCT international filing date of the continuation-in-part application.

I hereby claim foreign priority benefits under 35 U.S.C. 119(a)-(d) or (f), or 365(b) of any foreign application(s) for patent, or plant breeder's rights certificate(s), or 365(a) of any PCT International application which designated at least one country other than the United States of America, listed below and have also identified below, by checking the box, any foreign application for patent, inventor's or plant breeder's rights certificate(s), or any PCT international application having a filing date before that of the application on which priority is claimed.

Prior Foreign Application(s)			Priority Claimed
(Number)	(Country)	(Day/Month/Year Filed)	☒
(Number)	(Country)	(Day/Month/Year Filed)	☒
(Number)	(Country)	(Day/Month/Year Filed)	☒

I hereby claim the benefit under 35 U.S.C. Section 119(e) of any United States provisional application(s) listed below:

61/088,829	08/14/08
(Application Serial No.)	(Filing Date)
(Application Serial No.)	(Filing Date)
(Application Serial No.)	(Filing Date)

I hereby claim the benefit under 35 U. S. C. Section 120 of any United States application(s), or Section 365(c) of any PCT International application designating the United States, listed below and, insofar as the subject matter of each of the claims of this application is not disclosed in the prior United States or PCT International application in the manner provided by the first paragraph of 35 U.S.C. Section 112, I acknowledge the duty to disclose to the United States Patent and Trademark Office all information known to me to be material to patentability as defined in Title 37, C. F. R., Section 1.56 which became available between the filing date of the prior application and the national or PCT International filing date of this application:

(Application Serial No.)	(Filing Date)	(Status) (patented, pending, abandoned)
(Application Serial No.)	(Filing Date)	(Status) (patented, pending, abandoned)
(Application Serial No.)	(Filing Date)	(Status) (patented, pending, abandoned)
(Application Serial No.)	(Filing Date)	(Status) (patented, pending, abandoned)
(Application Serial No.)	(Filing Date)	(Status) (patented, pending, abandoned)
(Application Serial No.)	(Filing Date)	(Status) (patented, pending, abandoned)

I hereby declare that all statements made herein of my own knowledge are true and that all statements made on information and belief are believed to be true; and further that these statements were made with the knowledge that willful false statements and the like so made are punishable by fine or imprisonment, or both, under Section 1001 of Title 18 of the United States Code and that such willful false statements may jeopardize the validity of the application or any patent issued thereon.

POWER OF ATTORNEY: As a named inventor, I hereby appoint the following attorney(s) and/or agent(s) to prosecute this application and transact all business in the Patent and Trademark Office connected therewith. *(list name and registration number)*

Michael E. Whitham, Reg No. 32,635
Marshall M. Curtis, Reg No. 33,138
Clyde R Christofferson, Reg No. 34,138
C. Lamont Whitham, Reg. No. 22,424

Send Correspondence to:

Please Associate this Application
With **CUSTOMER NO. 30743**

Direct Telephone Calls to: *(name and telephone number)*
Michael E. Whitham 703-787-9400

Full name of sole or first inventor **Theodore S. Rappaport**	
Sole or first inventor's signature	Date 8/14/09
Residence **Austin, Texas USA**	
Citizenship **United States**	
Post Office Address **615 Hearn St., Austin, Texas 78703**	

Full name of second inventor, if any	
Second inventor's signature	Date
Residence	
Citizenship	
Post Office Address	

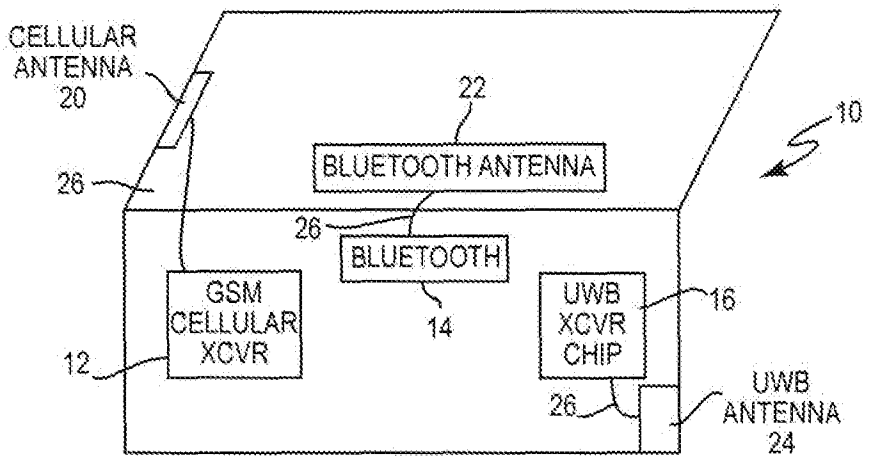

Figure 1

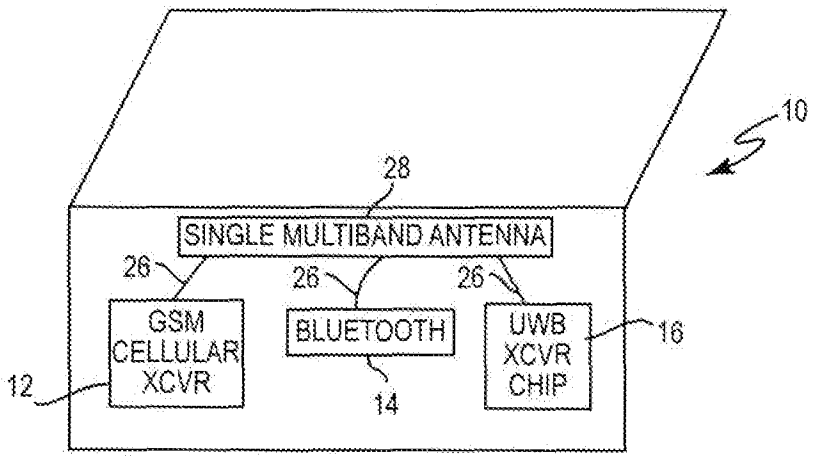

Figure 2

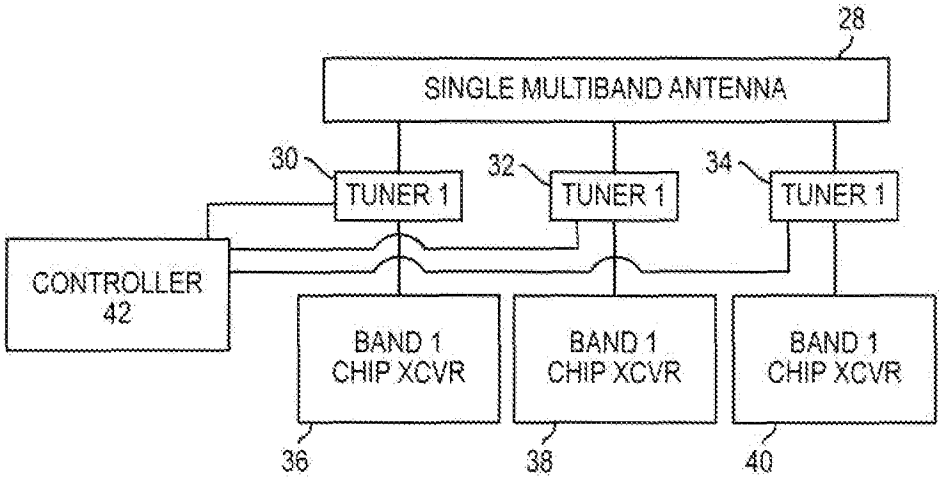

Figure 3

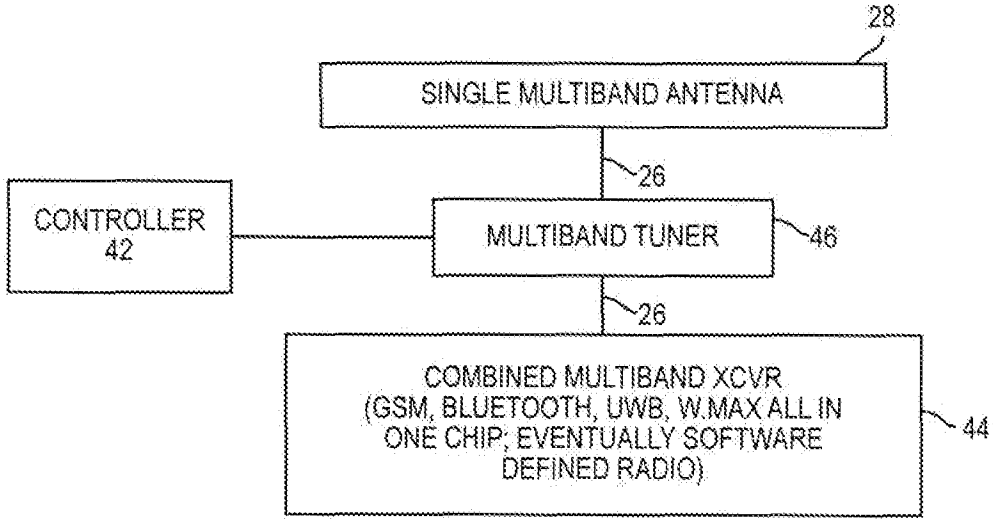

Figure 4

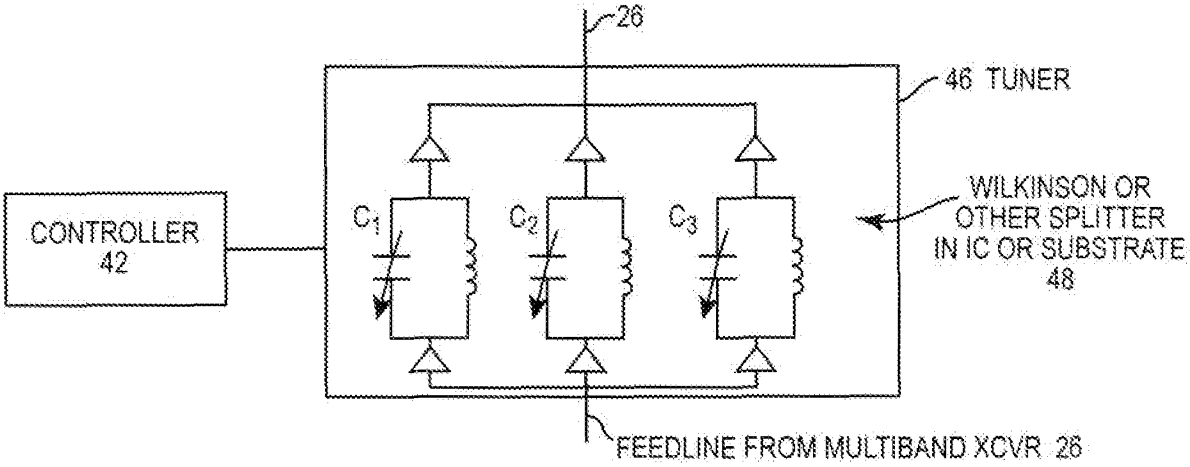

Figure 5

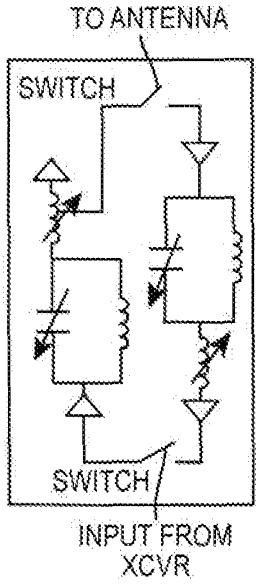

Figure 6A

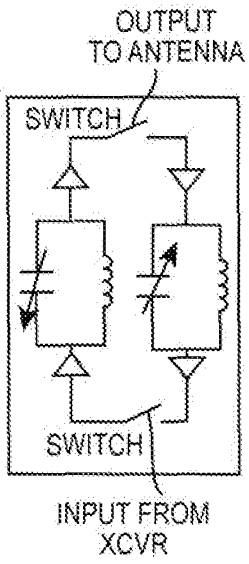

Figure 6B

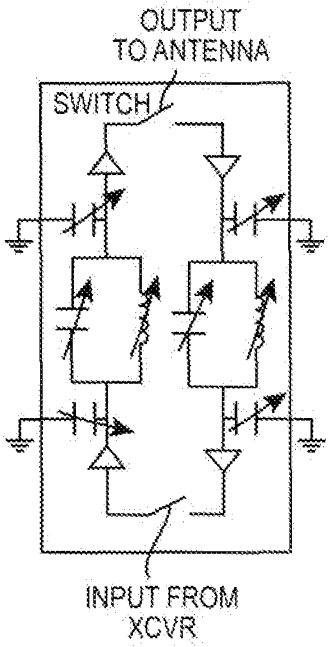

Figure 6C

Electronic Patent Application Fee Transmittal

Application Number:	12541764
Filing Date:	14-Aug-2009
Title of Invention:	ACTIVE ANTENNAS FOR MULTIPLE BANDS IN WIRELESS PORTABLE DEVICES
First Named Inventor/Applicant Name:	Theodore S. Rappaport
Filer:	Michael E. Whitham/carrie atkins
Attorney Docket Number:	08610010AA

Filed as Small Entity

Utility under 35 USC 111(a) Filing Fees

Description	Fee Code	Quantity	Amount	Sub-Total in USD($)
Basic Filing:				
Utility filing Fee (Electronic filing)	4011	1	82	82
Utility Search Fee	2111	1	270	270
Utility Examination Fee	2311	1	110	110
Pages:				
Claims:				
Claims in excess of 20	2202	1	26	26
Independent claims in excess of 3	2201	2	110	220
Miscellaneous-Filing:				

Description	Fee Code	Quantity	Amount	Sub-Total in USD($)
Late filing fee for oath or declaration	2051	1	65	65
Petition:				
Patent-Appeals-and-Interference:				
Post-Allowance-and-Post-Issuance:				
Extension-of-Time:				
Extension - 1 month with $0 paid	2251	1	65	65
Miscellaneous:				
			Total in USD ($)	**838**

Electronic Acknowledgement Receipt

EFS ID:	6486104
Application Number:	12541764
International Application Number:	
Confirmation Number:	4086
Title of Invention:	ACTIVE ANTENNAS FOR MULTIPLE BANDS IN WIRELESS PORTABLE DEVICES
First Named Inventor/Applicant Name:	Theodore S. Rappaport
Customer Number:	30743
Filer:	Michael E. Whitham/carrie atkins
Filer Authorized By:	Michael E. Whitham
Attorney Docket Number:	08610010AA
Receipt Date:	19-NOV-2009
Filing Date:	14-AUG-2009
Time Stamp:	13:48:12
Application Type:	Utility under 35 USC 111(a)

Payment information:

Submitted with Payment	yes
Payment Type	Deposit Account
Payment was successfully received in RAM	$838
RAM confirmation Number	146
Deposit Account	502041
Authorized User	

The Director of the USPTO is hereby authorized to charge indicated fees and credit any overpayment as follows:

Charge any Additional Fees required under 37 C.F.R. Section 1.16 (National application filing, search, and examination fees)

Charge any Additional Fees required under 37 C.F.R. Section 1.17 (Patent application and reexamination processing fees)

File Listing:

Document Number	Document Description	File Name	File Size(Bytes)/ Message Digest	Multi Part /.zip	Pages (if appl.)
1		08610010aa_response.PDF	1099688 2ccbaad959c844071ccf3afe0523edbc3d74f412	yes	11

Multipart Description/PDF files in .zip description

Document Description	Start	End
Applicant Response to Pre-Exam Formalities Notice	1	3
Miscellaneous Incoming Letter	4	5
Oath or Declaration filed	6	8
Drawings-only black and white line drawings	9	11

Warnings:

Information:

2	Fee Worksheet (PTO-875)	fee-info.pdf	41846 422d30fe9c3ebd074cb3b2da13801f2d0aa2a700	no	2

Warnings:

Information:

Total Files Size (in bytes):	1141534

This Acknowledgement Receipt evidences receipt on the noted date by the USPTO of the indicated documents, characterized by the applicant, and including page counts, where applicable. It serves as evidence of receipt similar to a Post Card, as described in MPEP 503.

New Applications Under 35 U.S.C. 111
If a new application is being filed and the application includes the necessary components for a filing date (see 37 CFR 1.53(b)-(d) and MPEP 506), a Filing Receipt (37 CFR 1.54) will be issued in due course and the date shown on this Acknowledgement Receipt will establish the filing date of the application.

National Stage of an International Application under 35 U.S.C. 371
If a timely submission to enter the national stage of an international application is compliant with the conditions of 35 U.S.C. 371 and other applicable requirements a Form PCT/DO/EO/903 indicating acceptance of the application as a national stage submission under 35 U.S.C. 371 will be issued in addition to the Filing Receipt, in due course.

New International Application Filed with the USPTO as a Receiving Office
If a new international application is being filed and the international application includes the necessary components for an international filing date (see PCT Article 11 and MPEP 1810), a Notification of the International Application Number and of the International Filing Date (Form PCT/RO/105) will be issued in due course, subject to prescriptions concerning national security, and the date shown on this Acknowledgement Receipt will establish the international filing date of the application.

SCORE Placeholder Sheet for IFW Content

Application Number: 12541764 Document Date: 11/19/2009

The presence of this form in the IFW record indicates that the following document type was received in electronic format on the date identified above. This content is stored in the SCORE database.

- Drawings – Other than Black and White Line Drawings

Since this was an electronic submission, there is no physical artifact folder, no artifact folder is recorded in PALM, and no paper documents or physical media exist. The TIFF images in the IFW record were created from the original documents that are stored in SCORE.

To access the documents in the SCORE database, refer to instructions developed by SIRA.

At the time of document entry (noted above):

- Examiners may access SCORE content via the eDAN interface.
- Other USPTO employees can bookmark the current SCORE URL (http://es/ScoreAccessWeb/).
- External customers may access SCORE content via the Public and Private PAIR interfaces.

Form Revision Date: February 8, 2006

UNITED STATES PATENT AND TRADEMARK OFFICE

UNITED STATES DEPARTMENT OF COMMERCE
United States Patent and Trademark Office
Address: COMMISSIONER FOR PATENTS
P.O. Box 1450
Alexandria, Virginia 22313-1450
www.uspto.gov

APPLICATION NUMBER	FILING or 371(c) DATE	GRP ART UNIT	FIL FEE REC'D	ATTY.DOCKET.NO	TOT CLAIMS	IND CLAIMS
12/541,764	08/14/2009	2821	0.00	08610010AA	21	5

CONFIRMATION NO. 4086

30743
WHITHAM, CURTIS & CHRISTOFFERSON & COOK, P.C.
11491 SUNSET HILLS ROAD
SUITE 340
RESTON, VA 20190

FILING RECEIPT

OC000000037710212

Date Mailed: 09/11/2009

Receipt is acknowledged of this non-provisional patent application. The application will be taken up for examination in due course. Applicant will be notified as to the results of the examination. Any correspondence concerning the application must include the following identification information: the U.S. APPLICATION NUMBER, FILING DATE, NAME OF APPLICANT, and TITLE OF INVENTION. Fees transmitted by check or draft are subject to collection. Please verify the accuracy of the data presented on this receipt. **If an error is noted on this Filing Receipt, please submit a written request for a Filing Receipt Correction. Please provide a copy of this Filing Receipt with the changes noted thereon. If you received a "Notice to File Missing Parts" for this application, please submit any corrections to this Filing Receipt with your reply to the Notice. When the USPTO processes the reply to the Notice, the USPTO will generate another Filing Receipt incorporating the requested corrections**

Applicant(s)
Theodore S. Rappaport, Austin, TX;

Power of Attorney: None

Domestic Priority data as claimed by applicant
This appln claims benefit of 61/088,829 08/14/2008

Foreign Applications

If Required, Foreign Filing License Granted: 09/04/2009

The country code and number of your priority application, to be used for filing abroad under the Paris Convention, is **US 12/541,764**

Projected Publication Date: To Be Determined - pending completion of Missing Parts

Non-Publication Request: No

Early Publication Request: No
**** SMALL ENTITY ****

Title

ACTIVE ANTENNAS FOR MULTIPLE BANDS IN WIRELESS PORTABLE DEVICES

Preliminary Class

343

PROTECTING YOUR INVENTION OUTSIDE THE UNITED STATES

Since the rights granted by a U.S. patent extend only throughout the territory of the United States and have no effect in a foreign country, an inventor who wishes patent protection in another country must apply for a patent in a specific country or in regional patent offices. Applicants may wish to consider the filing of an international application under the Patent Cooperation Treaty (PCT). An international (PCT) application generally has the same effect as a regular national patent application in each PCT-member country. The PCT process **simplifies** the filing of patent applications on the same invention in member countries, but **does not result** in a grant of "an international patent" and does not eliminate the need of applicants to file additional documents and fees in countries where patent protection is desired.

Almost every country has its own patent law, and a person desiring a patent in a particular country must make an application for patent in that country in accordance with its particular laws. Since the laws of many countries differ in various respects from the patent law of the United States, applicants are advised to seek guidance from specific foreign countries to ensure that patent rights are not lost prematurely.

Applicants also are advised that in the case of inventions made in the United States, the Director of the USPTO must issue a license before applicants can apply for a patent in a foreign country. The filing of a U.S. patent application serves as a request for a foreign filing license. The application's filing receipt contains further information and guidance as to the status of applicant's license for foreign filing.

Applicants may wish to consult the USPTO booklet, "General Information Concerning Patents" (specifically, the section entitled "Treaties and Foreign Patents") for more information on timeframes and deadlines for filing foreign patent applications. The guide is available either by contacting the USPTO Contact Center at 800-786-9199, or it can be viewed on the USPTO website at http://www.uspto.gov/web/offices/pac/doc/general/index.html.

For information on preventing theft of your intellectual property (patents, trademarks and copyrights), you may wish to consult the U.S. Government website, http://www.stopfakes.gov. Part of a Department of Commerce initiative, this website includes self-help "toolkits" giving innovators guidance on how to protect intellectual property in specific countries such as China, Korea and Mexico. For questions regarding patent enforcement issues, applicants may call the U.S. Government hotline at 1-866-999-HALT (1-866-999-4158).

LICENSE FOR FOREIGN FILING UNDER

Title 35, United States Code, Section 184

Title 37, Code of Federal Regulations, 5.11 & 5.15

GRANTED

The applicant has been granted a license under 35 U.S.C. 184, if the phrase "IF REQUIRED, FOREIGN FILING LICENSE GRANTED" followed by a date appears on this form. Such licenses are issued in all applications where the conditions for issuance of a license have been met, regardless of whether or not a license may be required as

set forth in 37 CFR 5.15. The scope and limitations of this license are set forth in 37 CFR 5.15(a) unless an earlier license has been issued under 37 CFR 5.15(b). The license is subject to revocation upon written notification. The date indicated is the effective date of the license, unless an earlier license of similar scope has been granted under 37 CFR 5.13 or 5.14.

This license is to be retained by the licensee and may be used at any time on or after the effective date thereof unless it is revoked. This license is automatically transferred to any related applications(s) filed under 37 CFR 1.53(d). This license is not retroactive.

The grant of a license does not in any way lessen the responsibility of a licensee for the security of the subject matter as imposed by any Government contract or the provisions of existing laws relating to espionage and the national security or the export of technical data. Licensees should apprise themselves of current regulations especially with respect to certain countries, of other agencies, particularly the Office of Defense Trade Controls, Department of State (with respect to Arms, Munitions and Implements of War (22 CFR 121-128)); the Bureau of Industry and Security, Department of Commerce (15 CFR parts 730-774); the Office of Foreign AssetsControl, Department of Treasury (31 CFR Parts 500+) and the Department of Energy.

NOT GRANTED

No license under 35 U.S.C. 184 has been granted at this time, if the phrase "IF REQUIRED, FOREIGN FILING LICENSE GRANTED" DOES NOT appear on this form. Applicant may still petition for a license under 37 CFR 5.12, if a license is desired before the expiration of 6 months from the filing date of the application. If 6 months has lapsed from the filing date of this application and the licensee has not received any indication of a secrecy order under 35 U.S.C. 181, the licensee may foreign file the application pursuant to 37 CFR 5.15(b).

UNITED STATES PATENT AND TRADEMARK OFFICE

UNITED STATES DEPARTMENT OF COMMERCE
United States Patent and Trademark Office
Address: COMMISSIONER FOR PATENTS
P.O. Box 1450
Alexandria, Virginia 22313-1450
www.uspto.gov

APPLICATION NUMBER	FILING OR 371(C) DATE	FIRST NAMED APPLICANT	ATTY. DOCKET NO./TITLE
12/541,764	08/14/2009	Theodore S. Rappaport	08610010AA

CONFIRMATION NO. 4086

FORMALITIES LETTER

30743
WHITHAM, CURTIS & CHRISTOFFERSON & COOK, P.C.
11491 SUNSET HILLS ROAD
SUITE 340
RESTON, VA 20190

OC000000037710213

Date Mailed: 09/11/2009

NOTICE TO FILE MISSING PARTS OF NONPROVISIONAL APPLICATION

FILED UNDER 37 CFR 1.53(b)

Filing Date Granted

Items Required To Avoid Abandonment:

An application number and filing date have been accorded to this application. The item(s) indicated below, however, are missing. Applicant is given **TWO MONTHS** from the date of this Notice within which to file all required items and pay any fees required below to avoid abandonment. Extensions of time may be obtained by filing a petition accompanied by the extension fee under the provisions of 37 CFR 1.136(a).

- The statutory basic filing fee is missing.
  *Applicant must submit $**82** to complete the basic filing fee for a small entity.*
- The oath or declaration is unsigned.

The application is informal since it does not comply with the regulations for the reason(s) indicated below.

The required item(s) identified below must be timely submitted to avoid abandonment:

- Replacement drawings in compliance with 37 CFR 1.84 and 37 CFR 1.121(d) are required. The drawings submitted are not acceptable because:
  - The drawings must be reasonably free from erasures and must be free from alterations, overwriting, interlineations, folds, and copy marks. See Figure(s) all.

Applicant is cautioned that correction of the above items may cause the specification and drawings page count to exceed 100 pages. If the specification and drawings exceed 100 pages, applicant will need to submit the required application size fee.

The applicant needs to satisfy supplemental fees problems indicated below.

The required item(s) identified below must be timely submitted to avoid abandonment:

- Additional claim fees of $**246** as a small entity, including any required multiple dependent claim fee, are required. Applicant must submit the additional claim fees or cancel the additional claims for which fees are due.
- To avoid abandonment, a surcharge (for late submission of filing fee, search fee, examination fee or oath or declaration) as set forth in 37 CFR 1.16(f) of $**65** for a small entity in compliance with 37 CFR 1.27, must be submitted with the missing items identified in this notice.

Samsung Ex. 1002, Page 75 of 109

SUMMARY OF FEES DUE:

Total additional fee(s) required for this application is $**773** for a small entity

- $**82** Statutory basic filing fee.
- $**65** Surcharge.
- The application search fee has not been paid. Applicant must submit $**270** to complete the search fee.
- The application examination fee has not been paid. Applicant must submit $**110** to complete the examination fee for a small entity in compliance with 37 CFR 1.27.
- Total additional claim fee(s) for this application is $**246**
  - $**220** for **2** independent claims over 3.
  - $**26** for **1** total claims over 20.

Replies should be mailed to:

Mail Stop Missing Parts
Commissioner for Patents
P.O. Box 1450
Alexandria VA 22313-1450

Registered users of EFS-Web may alternatively submit their reply to this notice via EFS-Web.
https://sportal.uspto.gov/authenticate/AuthenticateUserLocalEPF.html

For more information about EFS-Web please call the USPTO Electronic Business Center at **1-866-217-9197** or visit our website at http://www.uspto.gov/ebc.

If you are not using EFS-Web to submit your reply, you must include a copy of this notice.

/ebanaybanay/

Office of Data Management, Application Assistance Unit (571) 272-4000, or (571) 272-4200, or 1-888-786-0101

Express Mail Label No.

UTILITY PATENT APPLICATION TRANSMITTAL
(Small Entity)

(Only for new nonprovisional applications under 37 CFR 1.53(b))

Docket No.
08610010AA

Total Pages in this Submission

COMMISSIONER FOR PATENTS
P.O. Box 1450
Alexandria, VA 22313-1450

Transmitted herewith for filing under 35 U.S.C. 111(a) and 37 C.F.R. 1.53(b) is a new utility patent application for an invention entitled:

ACTIVE ANTENNAS FOR MULTIPLE BANDS IN WIRELESS PORTABLE DEVICES

and invented by:

Theodore S. Rappaport

If a CONTINUATION APPLICATION, *check appropriate box and supply the requisite information:*

☐ **Continuation** ☐ **Divisional** ☐ **Continuation-in-part (CIP)** of prior application No.: _____

Which is a:

☐ **Continuation** ☐ **Divisional** ☐ **Continuation-in-part (CIP)** of prior application No.: _____

Which is a:

☐ **Continuation** ☐ **Divisional** ☐ **Continuation-in-part (CIP)** of prior application No.: _____

Enclosed are:

Application Elements

1. ☒ Filing fee as calculated and transmitted as described below
2. ☒ Specification having 20 pages and including the following:
   - a. ☒ Descriptive Title of the Invention
   - b. ☒ Cross References to Related Applications *(if applicable)*
   - c. ☐ Statement Regarding Federally-sponsored Research/Development *(if applicable)*
   - d. ☐ Reference to Sequence Listing, a Table, or a Computer Program Listing Appendix
   - e. ☒ Background of the Invention
   - f. ☒ Brief Summary of the Invention
   - g. ☒ Brief Description of the Drawings *(if filed)*
   - h. ☒ Detailed Description
   - i. ☒ Claim(s) as Classified Below
   - j. ☒ Abstract of the Disclosure

Samsung Ex. 1002, Page 77 of 109

UTILITY PATENT APPLICATION TRANSMITTAL
(Small Entity)

(Only for new nonprovisional applications under 37 CFR 1.53(b))

Docket No.
08610010AA

Total Pages in this Submission

Application Elements (Continued)

3. ☒ Drawing(s) *(when necessary as prescribed by 35 USC 113)*
   - a. ☒ Formal Number of Sheets 3
   - b. ☐ Informal Number of Sheets
4. ☒ Oath or Declaration
   - a. ☐ Newly executed *(original or copy)* ☒ Unexecuted
   - b. ☐ Copy from a prior application (37 CFR 1.63(d)) *(for continuation/divisional application only)*
   - c. ☒ With Power of Attorney ☐ Without Power of Attorney
   - d. ☐ *DELETION OF INVENTOR(S)*
     Signed statement attached deleting inventor(s) named in the prior application, see 37 C.F.R. 1.63(d)(2) and 1.33(b).
5. ☐ Incorporation By Reference *(usable if Box 4b is checked)*
   The entire disclosure of the prior application, from which a copy of the oath or declaration is supplied under Box 4b, is considered as being part of the disclosure of the accompanying application and is hereby incorporated by reference therein.
6. ☐ CD ROM or CD-R in duplicate, large table or Computer Program (Appendix)
7. ☐ Application Data Sheet (See 37 CFR 1.76)
8. ☐ Nucleotide and/or Amino Acid Sequence Submission *(if applicable, all must be included)*
   - a. ☐ Computer Readable Form (CFR)
   - b. ☐ Specification Sequence Listing on:
     - i. ☐ CD-ROM or CD-R (2 copies); or
     - ii. ☐ Paper
   - c. ☐ Statement(s) Verifying Identical Paper and Computer Readable Copy

Accompanying Application Parts

9. ☐ Assignment Papers (cover sheet & document(s))
10. ☐ 37 CFR 3.73(B) Statement (when there is an assignee)
11. ☐ English Translation Document (if applicable)
12. ☐ Information Disclosure Statement/PTO-1449 ☐ Copies of IDS Citations
13. ☐ Preliminary Amendment
14. ☐ Return Receipt Postcard (MPEP 503) (Should be specifically itemized)
15. ☐ Certified Copy of Priority Document(s) (if foreign priority is claimed)
16. ☐ Certificate of Mailing

    ☐ First Class ☐ Express Mail *(Specify Label No.)*: _____

Samsung Ex. 1002, Page 78 of 109

UTILITY PATENT APPLICATION TRANSMITTAL (Small Entity) *(Only for new nonprovisional applications under 37 CFR 1.53(b))*	Docket No. 08610010AA
	Total Pages in this Submission

Accompanying Application Parts (Continued)

17. ☒ Applicant claims small entity status. See 37 CFR 1.27.

☐ (Optional) Small Entity Statement(s) - Specify Number of Statements Submitted: .....

18. ☐ Additional Enclosures *(please identify below)*:

Request That Application Not Be Published Pursuant To 35 U.S.C. 122(b)(2)

19. ☐ Pursuant to 35 U.S.C. 122(b)(2), Applicant hereby requests that this patent application not be published pursuant to 35 U.S.C. 122(b)(1). Applicant hereby certifies that the invention disclosed in this application has not and will not be the subject of an application filed in another country, or under a multilateral international agreement, that requires publication of applications 18 months after filing of the application.

Warning

An applicant who makes a request not to publish, but who subsequently files in a foreign country or under a multilateral international agreement specified in 35 U.S.C. 122(b)(2)(B)(i), must notify the Director of such filing not later than 45 days after the date of the filing of such foreign or international application. A failure of the applicant to provide such notice within the prescribed period shall result in the application being regarded as abandoned, unless it is shown to the satisfaction of the Director that the delay in submitting the notice was unintentional.

20. ☐ Other:

Samsung Ex. 1002, Page 79 of 109

UTILITY PATENT APPLICATION TRANSMITTAL
(Small Entity)

(Only for new nonprovisional applications under 37 CFR 1.53(b))

Docket No.
08610010AA

Total Pages in this Submission

Fee Calculation and Transmittal

CLAIMS AS FILED						
For	**#Filed**	**#Allowed**	**#Extra**		**Rate**	**Fee**
Total Claims	21	- 20 =	1	x	$26.00	$26.00
Indep. Claims	5	- 3 =	2	x	$110.00	$220.00
Multiple Dependent Claims (check if applicable) ☐						$0.00
Total # of Pages in Specification		**Total # of Drawing Sheets**				
Total # of Pages					**Application Size Fee**	$0.00
					Basic Fee	$165.00
					Search Fee	$270.00
					Examination Fee	$110.00
OTHER FEE *(specify purpose)*						$0.00
					TOTAL FILING FEE	$791.00

☐ A check in the amount of to cover the filing fee is enclosed.

☐ The Director is hereby authorized to charge and credit Deposit Account No. as described below.

- ☐ Charge the amount of as filing fee.
- ☐ Credit any overpayment.
- ☐ Charge any additional filing fees required under 37 C.F.R. 1.16 and 1.17.
- ☐ Charge the issue fee set in 37 C.F.R. 1.18 at the mailing of the Notice of Allowance, pursuant to 37 C.F.R. 1.311(b).

☐ Payment by credit card. Form PTO-2038 is attached.

WARNING: Information on this form may become public. Credit card information should not be included on this form. Provide credit card information and authorization on PTO-2038.

Dated: **August 14, 2009**

Signature

Michael E. Whitham
Reg. No. 32,635
Whitham, Curtis, Christofferson & Cook, PC
11491 Sunset Hills Road, Suite 340
Reston, Virginia 20190
703-787-9400

Customer Number: **30743**

cc:

Samsung Ex. 1002, Page 80 of 109

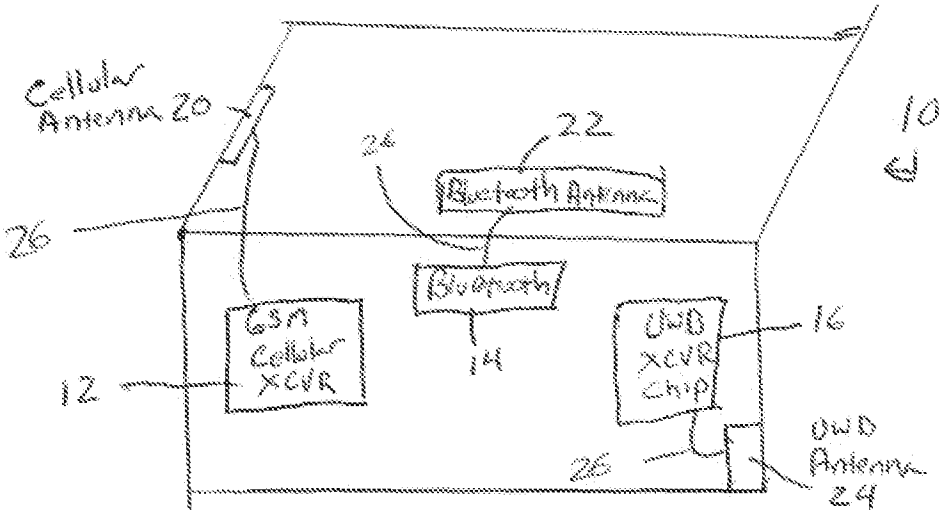

Figure 1

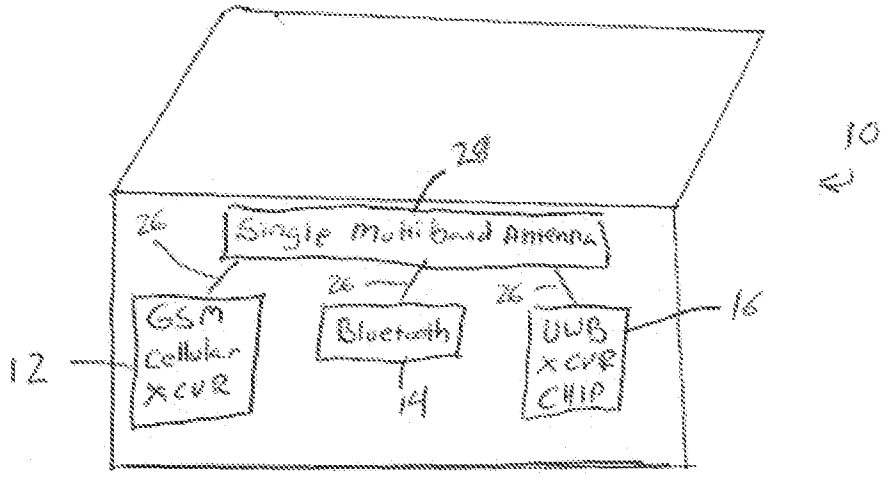

Figure 2

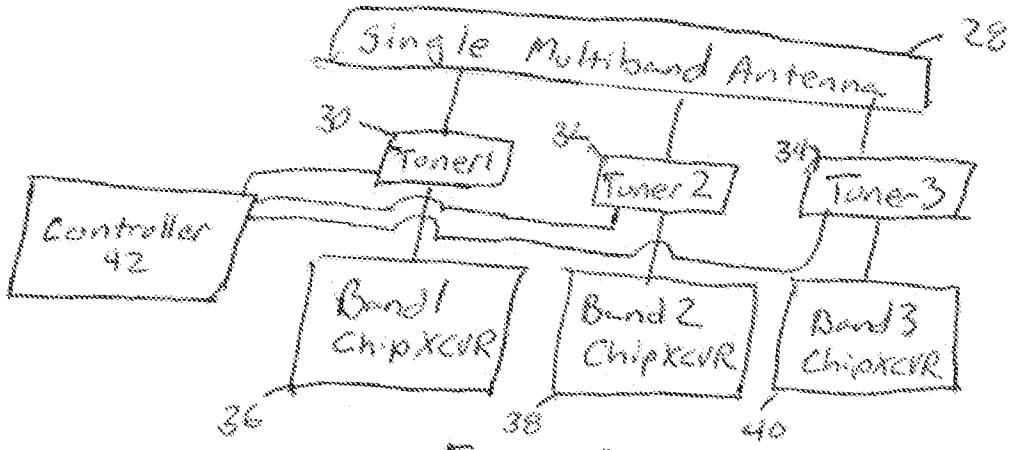

Figure3

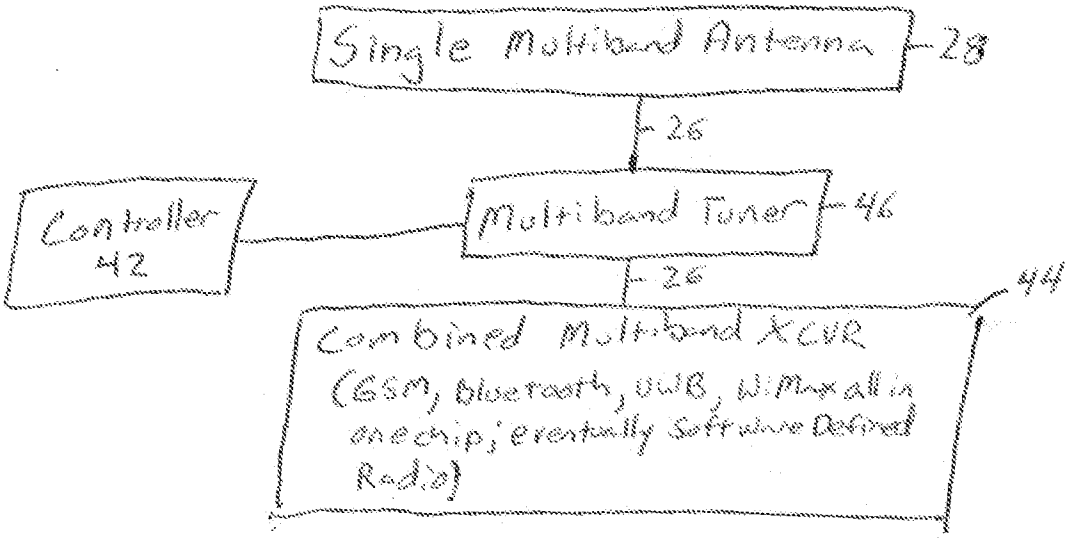

Figure 4

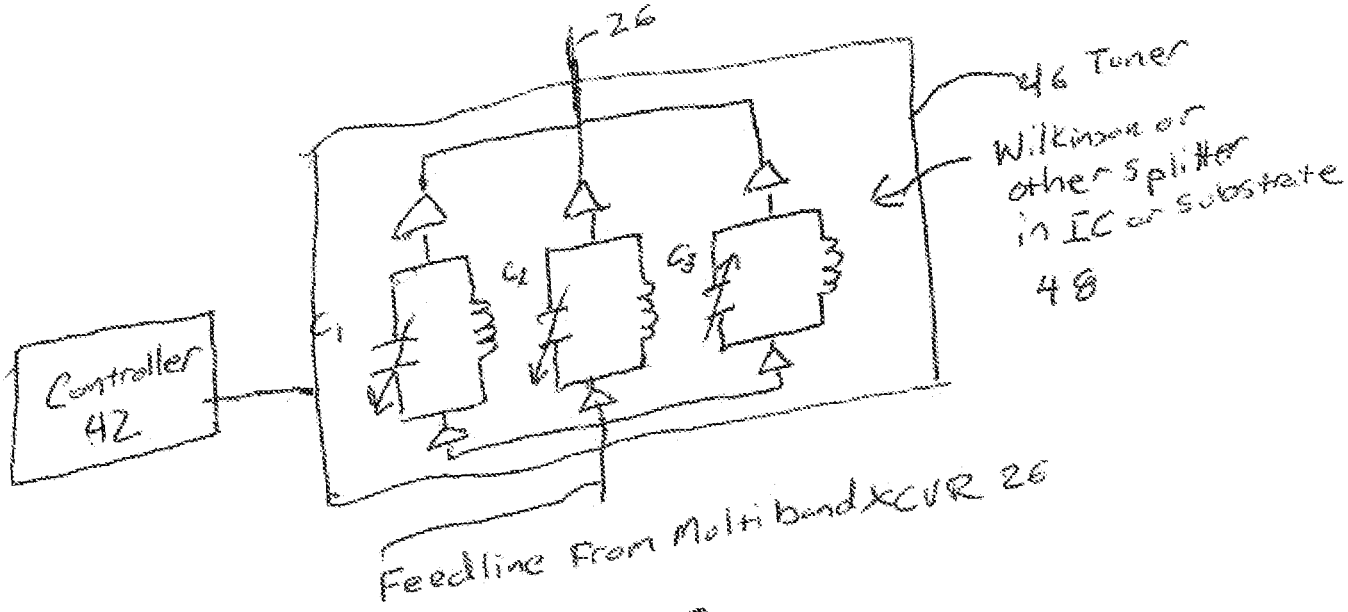

Figure 5

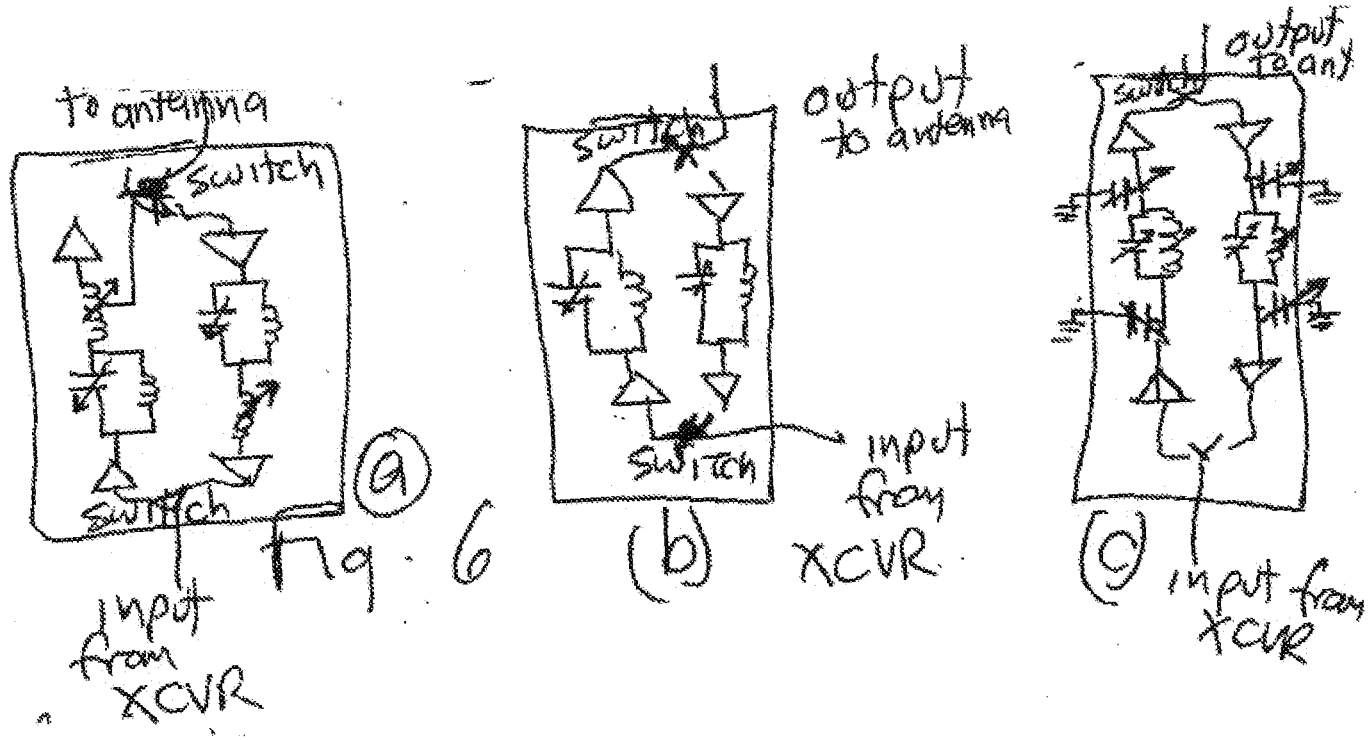

Fig. 6

Docket No.
05900006AA

Declaration and Power of Attorney For Patent Application

English Language Declaration

As a below named inventor, I hereby declare that:

My residence, post office address and citizenship are as stated below next to my name,

I believe I am the original, first and sole inventor (if only one name is listed below) or an original, first and joint inventor (if plural names are listed below) of the subject matter which is claimed and for which a patent is sought on the invention entitled

ACTIVE ANTENNAS FOR MULTIPLE BANDS IN WIRELESS PORTABLE DEVICES

the specification of which

(check one)

☒ is attached hereto.

☐ was filed on _____ as United States Application No. or PCT International Application Number _____

and was amended on _____

(if applicable)

I hereby state that I have reviewed and understand the contents of the above identified specification, including the claims, as amended by any amendment referred to above.

I acknowledge the duty to disclose information which is material to patentability as defined in 37 CFR 1.56, including for continuation-in-part applications, material information which became available between the filing date of the prior application and the national or PCT international filing date of the continuation-in-part application.

I hereby claim foreign priority benefits under 35 U.S.C. 119(a)-(d) or (f), or 365(b) of any foreign application(s) for patent, or plant breeder's rights certificate(s), or 365(a) of any PCT International application which designated at least one country other than the United States of America, listed below and have also identified below, by checking the box, any foreign application for patent, inventor's or plant breeder's rights certificate(s), or any PCT international application having a filing date before that of the application on which priority is claimed.

Prior Foreign Application(s)			Priority Claimed
(Number)	(Country)	(Day/Month/Year Filed)	☒
(Number)	(Country)	(Day/Month/Year Filed)	☒
(Number)	(Country)	(Day/Month/Year Filed)	☒

Samsung Ex. 1002, Page 84 of 109

I hereby claim the benefit under 35 U.S.C. Section 119(e) of any United States provisional application(s) listed below:

61/088,829	08/14/08
(Application Serial No.)	(Filing Date)
(Application Serial No.)	(Filing Date)
(Application Serial No.)	(Filing Date)

I hereby claim the benefit under 35 U. S. C. Section 120 of any United States application(s), or Section 365(c) of any PCT International application designating the United States, listed below and, insofar as the subject matter of each of the claims of this application is not disclosed in the prior United States or PCT International application in the manner provided by the first paragraph of 35 U.S.C. Section 112, I acknowledge the duty to disclose to the United States Patent and Trademark Office all information known to me to be material to patentability as defined in Title 37, C. F. R., Section 1.56 which became available between the filing date of the prior application and the national or PCT International filing date of this application:

(Application Serial No.)	(Filing Date)	(Status) (patented, pending, abandoned)
(Application Serial No.)	(Filing Date)	(Status) (patented, pending, abandoned)
(Application Serial No.)	(Filing Date)	(Status) (patented, pending, abandoned)
(Application Serial No.)	(Filing Date)	(Status) (patented, pending, abandoned)
(Application Serial No.)	(Filing Date)	(Status) (patented, pending, abandoned)
(Application Serial No.)	(Filing Date)	(Status) (patented, pending, abandoned)

I hereby declare that all statements made herein of my own knowledge are true and that all statements made on information and belief are believed to be true; and further that these statements were made with the knowledge that willful false statements and the like so made are punishable by fine or imprisonment, or both, under Section 1001 of Title 18 of the United States Code and that such willful false statements may jeopardize the validity of the application or any patent issued thereon.

POWER OF ATTORNEY: As a named inventor, I hereby appoint the following attorney(s) and/or agent(s) to prosecute this application and transact all business in the Patent and Trademark Office connected therewith. *(list name and registration number)*

Michael E. Whitham, Reg No. 32,635
Marshall M. Curtis, Reg No. 33,138
Clyde R.Christofferson, Reg No. 34,138
C. Lamont Whitham, Reg. No. 32,424

Send Correspondence to:

Please Associate this Application
With **CUSTOMER NO. 30743**

Direct Telephone Calls to: *(name and telephone number)*
Michael E. Whitham 703-787-9400

Full name of sole or first inventor **Theodore S. Rappaport**	
Sole or first inventor's signature	Date
Residence **Austin, Texas USA**	
Citizenship **United Statez**	
Post Office Address **615 Hearn St., Austin, Texas 78703**	

Full name of second inventor, if any	
Second inventor's signature	Date
Residence	
Citizenship	
Post Office Address	

Electronic Acknowledgement Receipt

EFS ID:	5894805
Application Number:	12541764
International Application Number:	
Confirmation Number:	4086
Title of Invention:	ACTIVE ANTENNAS FOR MULTIPLE BANDS IN WIRELESS PORTABLE DEVICES
First Named Inventor/Applicant Name:	Theodore S. Rappaport
Customer Number:	30743
Filer:	Michael E. Whitham/carrie atkins
Filer Authorized By:	Michael E. Whitham
Attorney Docket Number:	08610010AA
Receipt Date:	14-AUG-2009
Filing Date:	
Time Stamp:	17:49:28
Application Type:	Utility under 35 USC 111(a)

Payment information:

Submitted with Payment	no

File Listing:

Document Number	Document Description	File Name	File Size(Bytes)/ Message Digest	Multi Part /.zip	Pages (if appl.)
1		08610010aa_new_appln.PDF	4783277 9314037f2c1c80737f40291bed6187b8ea2f52b8	yes	30

	Multipart Description/PDF files in .zip description		
	Document Description	**Start**	**End**
	Transmittal of New Application	1	4
	Specification	5	19
	Claims	20	23
	Abstract	24	24
	Drawings-only black and white line drawings	25	27
	Oath or Declaration filed	28	30
Warnings:			
Information:			
	Total Files Size (in bytes):	4783277	

This Acknowledgement Receipt evidences receipt on the noted date by the USPTO of the indicated documents, characterized by the applicant, and including page counts, where applicable. It serves as evidence of receipt similar to a Post Card, as described in MPEP 503.

New Applications Under 35 U.S.C. 111
If a new application is being filed and the application includes the necessary components for a filing date (see 37 CFR 1.53(b)-(d) and MPEP 506), a Filing Receipt (37 CFR 1.54) will be issued in due course and the date shown on this Acknowledgement Receipt will establish the filing date of the application.

National Stage of an International Application under 35 U.S.C. 371
If a timely submission to enter the national stage of an international application is compliant with the conditions of 35 U.S.C. 371 and other applicable requirements a Form PCT/DO/EO/903 indicating acceptance of the application as a national stage submission under 35 U.S.C. 371 will be issued in addition to the Filing Receipt, in due course.

New International Application Filed with the USPTO as a Receiving Office
If a new international application is being filed and the international application includes the necessary components for an international filing date (see PCT Article 11 and MPEP 1810), a Notification of the International Application Number and of the International Filing Date (Form PCT/RO/105) will be issued in due course, subject to prescriptions concerning national security, and the date shown on this Acknowledgement Receipt will establish the international filing date of the application.

ACTIVE ANTENNAS FOR MULTIPLE BANDS IN WIRELESS PORTABLE DEVICES

CROSS-REFERENCE TO RELATED APPLICATIONS

This application claims priority to U.S. Provisional Application Serial No. 61/088,829, entitled "Single Active Antenna for Multiple Bands in Wireless Portable Devices", filed August 14, 2008, and the complete contents thereof is incorporated by reference

BACKGROUND OF THE INVENTION

Field of the Invention

The present invention relates to wireless portable devices and particularly to improvements in transmitting and receiving electromagnetic signals at multiple frequency bands.

Background of the Invention

Today's wireless devices, such as laptops and computers that connect wirelessly to the cellphone network or internet must use antennas to transmit and receive wireless energy to and from the device. Today's cellphones and laptops typically require multiple antennas, each antenna designed for resonance or desired performance at a particular frequency band (such as cellular band, say in the 850 – 950 MHz band, the Bluetooth/WiFi band, say in the 2400 – 2490 MHz band, and so on). Computer makers and cellphone makers have difficulty with the mechanical design of their equipment, and spend a great deal of engineering time, research, and cost in manufacture for the bill of materials for the feedlines and connections between transmitter circuits, transceiver circuits, or receiver circuits and the antennas that are mounted or housed in the wireless

device casing. In some cases, antennas must be oriented in the flip up top of a lap top, placed behind or in the display screen, and tiny coaxial cables run through the case hinges, to the motherboard mounted below the keyboard. Similar problems exist with cellphones, and all devices generally must meet or exceed certain federal or wireless carrier-imposed requirements for radiation efficiency for a wide range of device orientations. It is envisioned that as wireless proliferates, cellphones and laptops will require more and more separate radio frequency bands in order to offer connectivity and competitive services. It is not inconceivable to eventually have wireless portable devices requiring 10 or more separate frequency bands, where the term "band" here means a particular wireless standard or service that is distinct from another. For example, standards such as IEEE 802.11a, 802.11b, 802.11g, 802.15a, 802.15.3.c, Cellular telephone (European, Asian, or US spectrum), Bluetooth, WiMax, PCS, all represent different bands, as they generally have different RF frequency band allocations assigned to them. In the future, RFID tags, vehicles, wireless post it notes, equipment, shipping containers, and even clothing may also suffer the issue of having to provide multiple antennas for different RF bands.

Today, there are many passive antennas solutions that have been published in the literature, such as, for example, the broadband planar antenna developed by Prof. Chen at The University of Texas. Using Fractal programming (genetic algorithms), it is possible to do computer simulations that eventually create an antenna design that offers resonance for several different frequency bands. Such antennas generally are developed by using field solver programs, where the field solver is set to optimize an antenna structure for a particular antenna performance over a specified range of frequencies (for example, the field solver may be set to find an antenna structure that has a low return loss, S11, of less than -13dB over the range of frequencies of 2.4 – 2.9 GHz and 5.1 – 5.8 GHz, in order to accommodate Bluetooth and WiFi 802.11a, 802.11b, and 802.11g). However, planar antennas, when designed by an optimization program or set of algorithms, without the use of active antenna tuning, may result in a larger antenna than what is feasible for a small package (e.g. a small handset).

Recently, there have been some technical advances in active antenna tuning, some of which have been pioneered by Paratek Microwave in Nashua, NH. Using active

lumped elements, such as tunable capacitors, it is possible to allow for the active tuning of an antenna within a cellphone handset. Using electrically tunable capacitors, Paratek has pioneered a way to allow for active tuning of one or more cellphone antennas, as discussed in US patent 7,369,828.

In US patent 7,369,828 by Shamsaifar (owned by Paratek Microwave), the device can tune two different cellphone antennas for use on one of several bands of interest, where each distinct and separate antenna (one for high band and one for low band) has an active element that may be tuned. As described in U.S. Patent 7,369,829, a cellphone antenna is designed specifically for cellphone bands, since today's cellphones generally provide a small Bluetooth antenna, separate and apart from the cellular antenna. In U.S. Patent 7,369,829, there is described a method of transmitting and receiving RF signals from multiple frequency bands utilizing an electronically tunable multiple band antenna, comprising the steps of: providing a high band antenna with at least one voltage tunable varactor associated therewith, the high band antenna providing a first input to a controller; providing a low band antenna with at least one voltage tunable varactor associated therewith, the low band antenna providing a second input to the controller; and inputting control data to the controller and controlling a first bias voltage for biasing the at least one voltage tunable varactor associated with the high band antenna and a second bias voltage for biasing the at least one voltage tunable varactor associated with the low band antenna. By using a controller, the invention enables an antenna to be tuned.

The controller of the method in U.S. Patent 7,369,828 can use a DC voltage supply to provide the DC voltage needed to bias the voltage tunable varactors. The high band antenna of the method taught in U.S. Patent 7,369,828 can further comprise: a substrate; a patch element on the substrate; at least one voltage tunable varactor associated with the patch element; a DC bias point on the patch element; an RF input on the patch element; a temperature sensor; and a ground plane on one side of the substrate.

The low band antenna of the method taught in U.S. Patent 7,369,828 can further comprise: a substrate; a patch element on the substrate; at least one voltage tunable varactor associated with the patch element; a DC bias point on the patch element; an RF input on the patch element; a temperature sensor; and a ground plane on one side of the

substrate.

In a more specific embodiment of a preferred method of U.S. Patent 7,369,829, the multiple band antenna is a quad band antenna and covers the following frequency bands and standards which only involve cellular telephone (cellular and PCS): 824-894 MHz; 880-960 MHz; 1710-1880 MHz; 1850-1990 Hz; GSM850; EGSM; GSM1800; and PCS 1900.

Paratek uses BST as a tunable dielectric material that may be used in a tunable dielectric capacitor. ***Paratek Microwave,*** Inc. has developed and continues to develop tunable dielectric materials that may be utilized in embodiments of the antenna tuners and tunable filters, and the tuners are not necessary limited to using BST material. This family of tunable dielectric materials may be referred to as Parascan by the company.

The term "Parascan" as used herein is a trademarked term indicating a tunable dielectric material developed by Paratek Microwave, the assignee of US patents 7,397,329 and 7,369,828, and the idea of tunable dielectric materials have been described in several patents. Barium strontium titanate (BaTiO3-SrTiO3), also referred to as BSTO, is used for its high dielectric constant (200-6,000) and large change in dielectric constant with applied voltage (25-75 percent with a field of 2 Volts/micron).

Tunable dielectric materials including barium strontium titanate are disclosed in U.S. Pat. No. 5,312,790 to Sengupta, et al. entitled "Ceramic Ferroelectric Material"; U.S. Pat. No. 5,427,988 by Sengupta, et al. entitled "Ceramic Ferroelectric Composite Material-BSTO-MgO"; U.S. Pat. No. 5,486,491 to Sengupta, et al. entitled "Ceramic Ferroelectric Composite Material-BSTO-ZrO2"; U.S. Pat. No. 5,635,434 by Sengupta, et al. entitled "Ceramic Ferroelectric Composite Material-BSTO-Magnesium Based Compound"; U.S. Pat. No. 5,830,591 by Sengupta, et al. entitled "Multilayered Ferroelectric Composite Waveguides"; U.S. Pat. No. 5,846,893 by Sengupta, et al. entitled "Thin Film Ferroelectric Composites and Method of Making"; U.S. Pat. No. 5,766,697 by Sengupta, et al. entitled "Method of Making Thin Film Composites"; U.S. Pat. No. 5,693,429 by Sengupta, et al. entitled "Electronically Graded Multilayer Ferroelectric Composites"; U.S. Pat. No. 5,635,433 by Sengupta entitled "Ceramic Ferroelectric Composite Material BSTO-ZnO"; U.S. Pat. No. 6,074,971 by Chiu et al.

entitled "Ceramic Ferroelectric Composite Materials with Enhanced Electronic Properties BSTO Mg Based Compound-Rare Earth Oxide". These patents are incorporated herein by reference. The materials described in these patents, especially BSTO-MgO composites, show low dielectric loss and high tunability. Tunability is defined as the fractional change in the dielectric constant with applied voltage.

Using the idea of tunable capacitance, and following on the above listed prior art, Paratek Microwave has developed a technology called Adaptive Impedance Matching Models (AIMM) which it currently demonstrates on its website at worldwide web site paratek.com as able to adaptively tune antennas.

Agile Materials, a company founded in 1999 as a spinoff of University of California, Santa Barbara, has also developed tunable wireless components for multi-band systems. Agile has successfully commercialized its proprietary method to harness the unique properties of a thin-film ferroelectric capacitors, which may be tuned over at least an octave of frequency range. Agile employees produced patent 7,202,747, "Self Tuning Variable Impedence Circuit for Impedence Matching of Power amplifiers,", as well a 7,012,483, "Tunable Bridge Circuit", both of which use a BST tunable capacitive material to affect a resonance change in a tuneable circuit.. All of the aforementioned is known from the public prior art of record.

SUMMARY

The current invention uses one or more antennas, at least one of which can be used by multiple transmitters or receivers in different bands, thereby greatly simplifying the antenna structures in a portable wireless device, and greatly reducing the mechanical design complexity, the cost of bill of materials, and the variance in manufacturing of different devices of a particular model.

The current invention exploits the idea of active antenna tuning, but expands it greatly in a non-obvious way by applying the concepts to the situation of where multiple band transmitters, receivers, or transceivers must be used simultaneously in a wireless portable device. In cellphones today, since telephone call need only be made on one band at a time (either on High Band Cellular or Low Band Cellular, or 3G band, but not

more than one at a time), US Patent 7,369,829 and other prior art have not contemplated the present invention, which allows a single antenna to be used for simultaneous transmission (or reception) for multiple bands. The present invention greatly simplifies the mechanical design and layout of wireless portable devices by allowing multiple transmitter (or receiver) bands to simultaneously use one or more antennas for simultaneous multi-purpose use.

This invention allows an antenna, such as a patch or metal fixture or other type of conductive or non/semi-conductive elment or elements mounted on or within a mobile or portable device, to be simultaneously fed and used by multiple transmitters, receivers, or transceivers on different bands. It is understood that the terms portable and mobile may be used interchangeably. The invention has application with all wireless devices whether mobile, portable or fixed. This invention exploits active tuning and matching for each of the feedlines to antennas, or may use a single antenna feedline to match a single or multiple antennaa from multiple devices, using tunable technologies developed by Paratek Microwave, Agile, or others, as well as techniques described below, or by using signal processing in the RF or IF domains, as well.

DESCRIPTION OF THE DRAWINGS

Figure 1 shows today's typical cellphone or laptop design, where different transceivers are connected to different antennas.

Figure 2 shows an embodiment of the present invention, where multiple transmitters are fed to a single antenna (it is understood that transmitters could also be transceivers, or receivers).

Figure 3 shows a more detailed embodiment of the present invention, where multiple transmitters may be fed to a single antenna using multiple feedlines and active antenna tuners, controlled by a controller, operates on the RF of each signal. (it is understood that transmitters could also be transceivers, or receivers).

Figure 4 shows another embodiment of the present invention, where multiple transmitters may be fed to a single antenna using a single feedline and a single active antenna tuner which is controlled by a controller.

Figure 5 shows yet another alternate embodiment of the present invention, where a multiband tuner provides matching from a single multiband transmitter (or transceiver or receiver) feedline (e.g. a single RF source) to a single multi-use multi-band antenna

Figure 6 illustrates some examples of tuning circuits used within a tuner, with active elements.

DETAILED DESCRIPTION

Shown in Figure 1 is an example of how cellphones or laptops or other wireless devices 10 are designed today. In general, different band transceivers (e.g., GSM cellular transceiver 12, Bluetooth transceiver 14, and ultrawideband transceiver 16) are connected to different antennas (e.g., cellular antenna 20, Bluetooth antenna 22, and UWB antenna 24) that must be affixed to, located within the packaging of the device, or included in the printed circuit boards of the device, thereby taking up space, feedline resources (e.g., feedlines 26), increasing the bill of materials, and adding complexity.

Figure 2 illustrates the basic idea of the present invention which can be implemented in fixed or mobile wireless devices 10 such as computers, telephones, portable computing or communication devices, games, wireless post it notes, wireless memory media, personal data assistants and navigation assistants. One potential application of the invention is in the IEEE 802.11ad standard, where very high throughput wireless devices (e.g., 60 GHz carrier trnamissions) may use one or more transmitters, receivers or transceivers to simultaneously provide capabilities in the existing 802.11a and 802.11b bands of 2.4 GHz and 5.8 GHz, as well as the 60 GHz spectrum . Instead of requiring different antennas for the different RF bands, the present invention allows for the use of a single antenna 28 for multiple bands (or multiple antennas, at least one of which can be used for multiple bands). By providing the ability to use just a single antenna 28, the problem of mounting, locating, and feeding the antenna can be greatly reduced, so long as a desired antenna efficiency can be maintained for all bands of interest.

Figure 3 shows how the antenna efficiency can be maintained. By using individual RF tuners 30, 32, and 34, that may be based on Paratek's or Agile's

technology, or any other active tuning method, such as Microelectrical Mechanical Systems (MEMS), or variable mechanical resonator technologies, or other active or passive methods known now or in the future, it becomes possible to provide a good impedance match for each of the transceivers 36, 38 and 40 shown in Figure 3. The key to proper operation is to also, while providing good matching, provide sufficient RF isolation so that the transmitters in other bands do not overload the front end receiver of a band that is receiving. Fortunately, RF filtering and overload protection is improving in commercially available wireless transceivers in various popular bands, so that overload protection may be offered within the wireless transceiver chip itself through the integrated circuitry. Where more isolation is required, the tuner for a particular band is adjusted to offer very high impedance S22 characteristics at the other bands that differ from the dedicated band of the tuner, so that there is little, if any energy returned to the desired transceiver (or transmitter, or receiver) of the particular band of the tuner. In addition, low cost LC circuits may be etched into and/or added on the circuit board during manufacture or otherwise made a part of the tuner circuitry in order to create an RF Trap for the other bands, at much less cost and reduced engineering than having to use separate antennas for each band.

Furthermore, it is possible to use band transceivers that offer different antenna ports for the transmitter and the receiver within a particular band, whereby the present invention is simply extended to where there are two antennas used – one that is used solely for transmission by the multiple bands, and another multiband shared antenna for the receiver that is located a sufficient distance away within the casing, or which uses polarization diversity, or uses shielding or distributed antenna ideas within the case in order to reduce the RF overload from the transmitting antenna. The receiving antenna, for instance, might be mounted on the other side of the printed circuit board for the cellphone, or laptop, or RFID tag, or wireless post-it, or might be pitched at right angles in the casing, etc. It is also possible to use buffer amplifiers, tuned amplifiers, as well as tuned trap circuits for particular offending bands, that can act as filters to prevent RF from other multi-user band transmitters from leaking into the receiver portion of a particular band. Also, RF antenna switches, may be made inexpensively in an integrated circuit process in CMOS, GaAs, or other well known semiconductor technologies known

now or the future. These capabilities which may be incorporated in the tuner as described below. It should be clear in this disclosure that the term "antenna" is not meant to be limiting to any particular structure, but rather is meant to represent all of the possible ways that a wireless portable device may allow for radiation and reception of electromagnetic energy from particular frequency bands of interest.

Figure 3 also shows a tuner controller 42, preferably digital in nature and which may be part of a computer or microprocessor circuit that also controls one or more of the transceivers (or transmitters or receivers) shown in the figure. The controller 42 provides the proper voltages, or more preferably, the digital control values that are used by the tuner in order to adjust the active elements of the tuner (e.g. the tunable capacitors, inductors, amplifiers, and to toggle switches). The digital decoding circuitry in the tuner is not shown here, but is known to be implemented in a number of ways using standard serial or parallel digital busses that interconnect integrated circuits within cellphones and laptops. Furthermore, the controller receives feedback from the tuner, or from other circuitry (not shown) with respect to VSWR, power, and proper functionality so that the controller may properly adjust, alter, initiate, and end its use of control signals (either voltages or data values sent over a serial data line or a bus) to the tuner. In the case of the tuner receiving digital signals from the controller, it is understood that the tuner would have its own processing that would allow for the digital interpretation of control signals such as to properly determine the necessary analog voltages or other signal adjustments needed to perform impedance tuning through adjustment of the active tunable elements of the tuner, so that it would be possible to sequentially or simultaneously tune one or more of the tuners so that multiple bands may simultaneously transmit (or receive, or both) using the single antenna structure shown in the figure. The controller may be part of the overall portable device computing logic or controlling circuitry, or may be integrated within one or more of a particular band or multiband transceiver, transmitter, or receiver. The controller may be distributed within the portable device, and may even be responsive to over the air signaling that is received by one or more of the transceivers. The controller would have awareness of when particular bands were to be transmitting, receiving, or in the idle/off mode, so that it could properly control the active elements, and even provide power on/off/sleep instructions to the circuitry within the tuner. Note that nothing here is

meant to be limiting in how the controller might be used, as it is conceivable that it could be included in the circuitry of the tuner, or the tuner and controller ideas contemplated here all could be integrated within a single multiband transceiver chip, such as is shown in Figure 4.

Figure 4 shows an alternate embodiment, where the progress in IC design for wireless multiband, multi-mode circuits is contemplated. Indeed, today it is possible to purchase multi-band transceiver chips for popular wireless standards where different antenna ports are provided for various RF output bands. Figure 4 illustrates the use of a combined multiband transceiver 44 which may include, for example, GSM, Bluetooth, UWB, WiMAX all on one chip—eventually software designed radio be a part of the chip). The present idea, shown in Figure 4, using a single RF feedline to a single multiband active controller, would provide an advantage to the wireless industry through simplicity and reduced feedlines, reduced size and weight, and more flexibility in locating the antenna. The multiband tuner 46 would require greater complexity than as shown in Figure 3, as it would require the ability to simultaneously pass desired RF signals at proper low (generally 50 ohm or thereabouts) impedance for each of the bands that are being used, while providing very high impedance to other bands. The tuner is adjusted by the controller in order to indicate when a particular transmitter on a particular band is in the transmit mode or in the receive mode, or, alternatively, the tuner could simply offer matching capabilities to a transmitter to the antenna without consideration for the receiver (for the case where the receiver would be connected to a different antenna). The circuitry of the tuner is described in more detail below, and can exploit buffer amplifiers or tuned RF amplifiers at various RF frequencies to provide isolation, as well as antenna switching, all contained within the tuner, making it possible to create a low cost, high performance antenna tuner chip for the present application. An optional RF switch allows separate transmitter path and receiver path tuning for each of the bands at use. This concept may be included within a single band tuner element for the present invention.

Figure 5 illustrates a more detailed example of the active and passive circuitry of the present invention. To provide a single feedline to a single antenna, the tuner 46 requires controller circuitry that provides instructions as to how the particular active

devices may be adjusted. In this case, the term active indicates that RF tuning is possible, such as in the case of tunable capacitors or tunable inductors. Figure 5 shows an example, not in any way meant to be limiting to the type of impedance matching circuits 48 contemplated here, where the capacitors of each of three parallel band tuners are able to be tuned. Tuning methods for capacitors are well known, such as taught in the prior art patents by Paratek, and by researchers throughout the world. Similarly, it is possible to tune inductances, as well. Furthermore, shown in Figure 5, it is noted that RF amplifiers, that may be used to either offer matching impedance at the input (say 50 ohms) and particular desired impedance at the output feedline to the antenna, is shown. It should be clear that RF amplifiers, as shown in Figure 5 and 6, may either be strict buffer amplifiers with a very high output impedance, or alternatively, may be active devices that have a controlled impedance that is adjusted in tandem with the tuned circuit elements shown in the figures. Figure 5 represents an example of how multiband transmitted signals may be applied to a single multiband tuner. The input signals are split and routed to each of the respective tuner circuits, and may use a Wilkinson or simple ohmic splitter, which may implemented either on a printed circuit board substrate or within an integrated circuit. It is clear to one skilled in the art that tuner circuits and feedlines may be implemented in a myriad of ways depending on the particular physical structure of the circuitry. For example, coplanar waveguides or microstrip lines may be used in integrated circuits or circuit boards, and splitters, combiners, couplers, mixers, and switches may be fabricated to realize the invention using well understood techniques such as taught in D. Pozar's books Microwave Engineering, copyright 2004, and Microwave and RF Design of Wireless Systems, copyright 2000 which are hereby incorporated by reference, and as presented at various IEEE conferences on antennas, microwave theories, and circuits. While techniques for building both active and passive circuits are taught at various conferences, the use of such technology for the present invention has not been heretofore contemplated. It is well understood that a wide range of active and passive components, either lumped or distributed, may be combined with various transmission line and active and passive signal coupling techniques to implement the invention.

Figure 6a, b, and c illustrate some of the possible configurations of tuner elements for use in a multiband transceiver. It should be understood that these are representative,

and other combinations of lumped or distributed circuits are possible, where the proper choice would depend on the type and structure of single antenna to be used, the electrical specifications and impedance matching/antenna port/isolation capabilities of the transmitter, receiver, or transceiver chips being used in the portable device, as well as cost, bill of materials, and the type of mounting to be used for the tuner circuitry. That is, an integrated circuit tuner might be more likely to pick adjustable capacitors over adjustable inductors in some instances.

Note in Figure 6a, b and c that there are optional RF switches, that may be implemented in integrated circuit form within the tuner circuitry, that can be controlled by the controller to position properly for either transmit or receive operation. The transmitter configuration would exploit the left side of each of the depicted tuners, with a path providing matching to the single antenna structure, where the right side of each depicted tuner would be used for matching provided on the receive path. The switch would be controlled by the controller, or by some other means, such as from a master controller of the wireless device, the transceiver chip, or some other logic that instructs the particular transmitter in the particular band to transmit. Alternatively, the switches could be controlled by RF sensing, whereby the presence of sufficient level of RF from the transmitter (transceiver) chip causes the switches at the top and the bottom of the depictions to throw properly.

The active (tuned) elements shown in Figure 6a, b, and c, suggest that one or more tuned elements may be used in a tuner as disclosed here. For example, one method would only use tunable capacitors, which are available from Paratek Microwave. Other embodiments would use both tunable capacitors and tunable inductors, and still others may use a combination of tunable and fixed elements in order to provide antenna tuning of a particular band to a single antenna while providing sufficient RF isolation/rejection of unwanted bands.

For simplicity, the controller signal in the circuitry shown in Figure 6a, b, and c is omitted, but it should be clear that such signaling capability exists. Other features have also been omitted, such as temperature sensors to determine proper electrical characteristics and calibration of the tuned elements, feedback circuitry (to sense proper

VSWR, impedence, or acceptable power transfer, sufficient isolation), but these concepts are well understood by those skilled in the art.

It should also be clear that optimization algorithms that determine the values of multiband tuners so as to properly determine each of the active element positions could be performed by the controller as depicted in this invention disclosure. The optimization could use pre-set or memorized settings from recent or long term histories of proper tuning values, or could determine, on start up of the wireless device, appropriate values for the settings of each tuner elements. Such computation techniques, to determine a matrix of various values in a multidimensional problem, are well known and are varied. The use of memory to remember preset values for various use cases, and to store new or recent or past settings of tuner elements, in order to allow the invention to be used in a power efficient and reliable manner is contemplated here, although memory is not shown in the drawings. These techniques are well understood in the art.

In addition to the active tuned elements shown in Figure 6a, b, and c, it is possible to implement the invention using other frequency selective approaches, such as reasonably high-q passive circuits (with or without amplification), or using metamaterials or transmission line implementations which may be embedded within one or more semiconductor layers or substrates, or implemented in lumped element form, or through active and/or passive circuitry to provide the ability to provide either receiver or transmitter antenna tuning on multiple bands, as described above. Metamaterials are one way to create frequency selective surfaces and can provide good isloation,as descirbed in the paper coauthored by L. Ragan, A. Hassibi, T. S. Rappaport, and C. L. Christianson, entitled "Novel On-Chip Antenna Structures and Frequency Selective Surface (FSS) Approaches for Millimeter Wave Devices," IEEE 66th Vehicular Technology Conference (VTC), Baltimore, MD, Oct. 1 -3, 2007, pp. 2051-2055. and as described in US patent publication 20080238801 by Lawrence Ragan, both of which are fully incorporated here by reference. Such frequency selective structures and implementations, depending upon the particular omplementation, may require amplifiers or may be of sufficiently low loss to obviate the need for amplifiers directly at the antenna tuner junction. The controller would cause various switches, devices, or series or parallel (or both) combinations of connections, or would otherwise support voltages or currents to be established in order to

implement or select the desired tunability for these various possible implementations, it being understood that the controller could be designed to work in concert with various semiconductor properties, or with embedded, distributed or lumped circuitry within the RF stage or antenna interconnect stage, in order to affect the ability to use a single antenna on multiple bands.

As wireless devices begin to evolve to millimeter wave (mmWave) carrier frequencies at 60 GHz, and even to frequencies in the 77 to 500 GHz range, and even to Terahertz frequencies, the need to integrate the tuning and interconnection of a single antenna to RF circuitry will become even greater. System on a chip (Soc) implementations of the invention described here will be highly desirable so that a single integrated circuit, with an embedded antenna on the integrated circuit (chip) or package or on the case or circuit board of a consumer device (such as a PC, cellphone, television, vehicle, etc.) may be used for several different frequency bands, or for different portions of a massively wideband spectrum allocation. For example, 60 GHz devices may well work from 58 to 65 GHz, and it will be desirable to implement the current invention across different portions of that band (e.g. the same antenna may need to be tuned for the 58 - 60 GHz portion of the band for one particular application or instance, and the 62-64 GHz portion of the band for a different application or instance, or may also be used to tune to the 77 GHz band or 5.1 - 5.8 GHz band for operations, as well.). Ultrawideband repeaters, such as described in US patent application 10/919,515 to Rappaport, which is fully incorporated here by reference, could make use of this. It is understood that the controller may selectively switch, exit, or cause voltages or currents or switches to be activated in any particular implementation, and that the single antenna may itself be designed to have certain desirable properties or preferential frequency responses at certain different bands, but which are further improved and made to more efficiently transfer power (e.g. reduce the Voltage Standing Wave Ratio, increase efficiency, tune for improved SNR, decrease power or current drain, or improve some other power transfer metric, all of which are examples of matching the antenna to the other circuitry including without limitation the transmitters, receivers, and transceivers) between the antenna and the transmitter and/or receiver through the disclosed invention.

It should be evident that the invention contemplated here, while described as a single antenna, may itself be implemented with other antennas or antenna elements or sub elements to form an antenna array, including for use in a MiMO system or beam switchable array, and that the disclosed invention with single antenna which may have one or more elements or antennas and which may be implemented in a lumped or distributed or passive or active or hybrid manner, and may be used in conjunction with other antennas in various switching, phasing, or active or passive combining techniques to form a larger or distributed antenna structure that also works over multiple frequencies. The invention extends to components such as the tuner and/or controller for implement the invention. For example, tuners or sets of tuners which are connectable or coupled to multiple transmitters, receivers, or transceivers for allowing the simultaneous transmission or reception at multiple frequency bands or the ability to use a single physical structure (e.g., an antenna) for transmission and reception of many different bands, or controllers or other circuitry for accomplishing the same form a part of this invention.

CLAIMS

I claim:

1. A wireless device, comprising:

one or more antennas; and

a plurality of transmitters, receivers or transceivers that operate in one or more frequency bands,

wherein at least one antenna of said one or more antennas is used by said plurality of transmitters, receivers or transceivers in a plurality of different bands.

2. The wireless device of claim 1 wherein said at least one antenna is an actively tuned antenna.

3. The wireless device of claim 1 wherein said at least one antenna is tuned by one or more passive elements which are selected or interconnected using electronic control.

4. The wireless device of claim 3 wherein said passive elements are comprised of either or both lumped or distributed elements.

5. The wireless device of claim 1 wherein said at least one antenna is used for transmitting, receiving, or transmitting and receiving simultaneously in said plurality of different bands.

6. The wireless device of claim 1 further comprising

one or more tuners associated with one or more transmitters, receivers or transceivers of said plurality of transmitters, receivers or transceivers; and

a controller for controlling tuning of the tuner for said at least one antenna to operate in said plurality of different bands.

7. The wireless device of claim 1 wherein said mobile device is selected from the group consisting of computers, telephones, portable computing or communication devices, games, wireless post it notes, wireless memory media, RFID tags, vehicles, clothing, personal data assistants and navigation assistants.

8. A wireless device, comprising:

one or more antennas; and

at least one multiband transmitter, receiver or transceiver;

a tuner associated with said at least one multiband transmitter, receiver, or transceiver; and

a controller for controlling tuning of the tuner to a plurality of different bands

wherein at least one antenna of said one or more antennas is used by said at least one multiband transmitter, receiver or transceiver in a plurality of different bands.

9. The wireless device of claim 8 said at least one antenna is used for transmitting, receiving, or transmitting and receiving simultaneously in said plurality of different bands.

10. The wireless device of claim 8 wherein said mobile device is selected from the group consisting of computers, telephones, portable computing or communication devices, games, wireless post it notes, wireless memory media, RFID tags, vehicles, clothing, personal data assistants and navigation assistants.

11. The wireless device of claim 8 wherein said at least one antenna is an actively tuned antenna.

12. The wireless device of claim 8 wherein said at least one antenna is tuned by one or more passive elements which are selected or interconnected using electronic control.

13. The wireless device of claim 12 wherein said passive elements are comprised of either or both lumped or distributed elements.

14. A wireless device, comprising:

at least one multiband antenna;

at least one multiband transmitter, receiver or transceiver; and

a tuner associated with said at least one multiband transmitter, receiver, or transceiver, said tuner matching said at least one multiband antenna to said at least one multiband transmitter, receiver or transceiver in a plurality of different bands.

15. The mobile device of claim 14 wherein said at least one antenna is used for transmitting, receiving, or transmitting and receiving simultaneously in said plurality of different bands.

16. The wireless device of claim 14 wherein said mobile device is selected from the group consisting of computers, telephones, portable computing or communication devices, games, wireless post it notes, wireless memory media, RFID tags, vehicles, clothing, personal data assistants and navigation assistants.

17. A wireless portable device, comprising:

one or more antennas radiating or receiving electromagnetic energy at particular frequency bands, at least one of said one or more antennas radiating or receiving electromagnetic energy at a plurality of particular frequency bands;

one or more components selected from the group consisting of receivers, transmitters and transceivers, said one or more components connected to said at least one of said one or more antennas, whereby

at least one of said one or more components transmits or receives electromagnetic energy at two or more of said plurality of particular frequency bands, or

two or more components transmit or receive electromagnetic energy at two or more of said plurality of particular frequency bands.

18. The wireless portable device of claim 17 wherein said wireless portable device is selected from the group consisting of computers, telephones, personal data assistants, and navigation assistants.

19. The wireless portable device of claim 17 further comprising one or more tuners which match electromagnetic energy at a particular frequency band to only one of said one or more components.

20. The wireless portable device of claim 17 further comprising isolation means for isolating said one or more components from more than one particular frequency band of said plurality of frequency bands.

21. A wireless device component, comprising a tuner or a set of tuners or controller or other circuitry configurable to be coupled to at least one antenna and a plurality of transmitters, receivers, or transceivers that operate at one or more frequency bands, wherein said at least one antenna is used by said plurality of transmitters, receivers or transceivers in a plurality of different bands.

ABSTRACT OF THE DISCLOSURE

Wireless devices, and particularly mobile devices such as cellphones, PDAs, computers, navigation devices, etc., as well as other devices which transmit or receive data or other signals at multiple frequency bands utilize at least one antenna to transmit and receive and a plurality of different bands (e.g., GSM cellular communication band; Bluetooth short range communication band; ultrawideband (UWB) communications, etc.). These wireless devices can simultaneously transmit or receive at a plurality of different bands, or simultaneously transmit and receive at different bands. The wireless devices have the ability to use a single physical structure (e.g., an antenna) for transmission and reception of many different bands. The antenna can be either actively tuned or passively tuned using one or more elements.

Filing Date: 08/14/09

Approved for use through 7/31/2006. OMB 0651-0032
U.S. Patent and Trademark Office; U.S. DEPARTMENT OF COMMERCE

Under the Paperwork Reduction Act of 1995, no persons are required to respond to a collection of information unless it displays a valid OMB control number.

PATENT APPLICATION FEE DETERMINATION RECORD

Substitute for Form PTO-875

Application or Docket Number: 12/541,764

APPLICATION AS FILED – PART I

FOR	(Column 1) NUMBER FILED	(Column 2) NUMBER EXTRA	SMALL ENTITY RATE ($)	SMALL ENTITY FEE ($)	OR	OTHER THAN SMALL ENTITY RATE ($)	OTHER THAN SMALL ENTITY FEE ($)
BASIC FEE (37 CFR 1.16(a), (b), or (c))	N/A	N/A	N/A	82		N/A	
SEARCH FEE (37 CFR 1.16(k), (i), or (m))	N/A	N/A	N/A	270		N/A	
EXAMINATION FEE (37 CFR 1.16(o), (p), or (q))	N/A	N/A	N/A	110		N/A	
TOTAL CLAIMS (37 CFR 1.16(i))	21 minus 20 =	1	x$26	26	OR	x$52	
INDEPENDENT CLAIMS (37 CFR 1.16(h))	5 minus 3 =	* 2	x$110	220		x$220	
APPLICATION SIZE FEE (37 CFR 1.16(s))	If the specification and drawings exceed 100 sheets of paper, the application size fee due is $270 ($135 for small entity) for each additional 50 sheets or fraction thereof. See 35 U.S.C. 41(a)(1)(G) and 37 CFR						
MULTIPLE DEPENDENT CLAIM PRESENT (37 CFR 1.16(j))			195			390	
* If the difference in column 1 is less than zero, enter "0" in column 2.			TOTAL	708		TOTAL	

APPLICATION AS AMENDED – PART II

		(Column 1) CLAIMS REMAINING AFTER AMENDMENT		(Column 2) HIGHEST NUMBER PREVIOUSLY PAID FOR	(Column 3) PRESENT EXTRA	SMALL ENTITY RATE ($)	SMALL ENTITY ADDI-TIONAL FEE ($)	OR	OTHER THAN SMALL ENTITY RATE ($)	OTHER THAN SMALL ENTITY ADDI-TIONAL FEE ($)
AMENDMENT A	Total (37 CFR 1.16(i))	*	Minus	**	=	x =		OR	x =	
	Independent (37 CFR 1.16(h))	*	Minus	***	=	x =		OR	x =	
	Application Size Fee (37 CFR 1.16(s))									
	FIRST PRESENTATION OF MULTIPLE DEPENDENT CLAIM (37 CFR 1.16(j))					N/A		OR	N/A	
						TOTAL ADD'T FEE		OR	TOTAL ADD'T FEE	

		(Column 1) CLAIMS REMAINING AFTER AMENDMENT		(Column 2) HIGHEST NUMBER PREVIOUSLY PAID FOR	(Column 3) PRESENT EXTRA	RATE ($)	ADDI-TIONAL FEE ($)	OR	RATE ($)	ADDI-TIONAL FEE ($)
AMENDMENT B	Total (37 CFR 1.16(i))	*	Minus	**	=	x =		OR	x =	
	Independent (37 CFR 1.16(h))	*	Minus	***	=	x =		OR	x =	
	Application Size Fee (37 CFR 1.16(s))									
	FIRST PRESENTATION OF MULTIPLE DEPENDENT CLAIM (37 CFR 1.16(j))					N/A		OR	N/A	
						TOTAL ADD'T FEE		OR	TOTAL ADD'T FEE	

* If the entry in column 1 is less than the entry in column 2, write "0" in column 3.
** If the "Highest Number Previously Paid For" IN THIS SPACE is less than 20, enter "20".
*** If the "Highest Number Previously Paid For" IN THIS SPACE is less than 3, enter "3".
The "Highest Number Previously Paid For" (Total or Independent) is the highest number found in the appropriate box in column 1.

This collection of information is required by 37 CFR 1.16. The information is required to obtain or retain a benefit by the public which is to file (and by the USPTO to process) an application. Confidentiality is governed by 35 U.S.C. 122 and 37 CFR 1.14. This collection is estimated to take 12 minutes to complete, including gathering, preparing, and submitting the completed application form to the USPTO. Time will vary depending upon the individual case. Any comments on the amount of time you require to complete this form and/or suggestions for reducing this burden, should be sent to the Chief Information Officer, U.S. Paten and Trademark Office, U.S. Department of Commerce, P.O. Box 1450, Alexandria, VA 22313-1450. DO NOT SEND FEES OR COMPLETED FORMS TO THIS ADDRESS. **SEND TO: Commissioner for Patents, P.O. Box 1450, Alexandria, VA 22313-1450.**

If you need assistance in completing the form, call 1-800-PTO-9199 and select option 2.