US007786819B2

(12) **United States Patent**
Ella et al.

(10) **Patent No.: US 7,786,819 B2**
(45) **Date of Patent: Aug. 31, 2010**

(54) **APPARATUS COMPRISING AN ANTENNA ELEMENT, WHICH EFFICIENTLY PERFORMS AT BOTH A FIRST RESONANT FREQUENCY BAND AND A SECOND RESONANT FREQUENCY BAND, METHOD AND COMPUTER PROGRAM THEREFORE**

(75) Inventors: **Juha S. Ella**, Halikko (FI); **Janne P. Kylakoski**, Paimio (FI)

(73) Assignee: **Nokia Corporation**, Espoo (FI)

(*) Notice: Subject to any disclaimer, the term of this patent is extended or adjusted under 35 U.S.C. 154(b) by 94 days.

(21) Appl. No.: **11/897,614**

(22) Filed: **Aug. 31, 2007**

(65) **Prior Publication Data**

US 2009/0058550 A1 Mar. 5, 2009

(51) **Int. Cl.**
H03H 7/38 (2006.01)

(52) **U.S. Cl.** **333/17.3**; 333/32; 455/123; 455/248.1

(58) **Field of Classification Search** 333/17.3, 333/32; 455/123, 125, 248.1; 343/860, 861, 343/745

See application file for complete search history.

(56) **References Cited**

U.S. PATENT DOCUMENTS

5,589,844 A * 12/1996 Belcher et al. 343/860
5,778,308 A 7/1998 Sroka et al. 455/115
6,946,847 B2 * 9/2005 Nishimori et al. 324/600
7,199,678 B2 * 4/2007 Matsuno 333/17.3
7,671,693 B2 * 3/2010 Brobston et al. 333/17.3
2004/0263411 A1 12/2004 Fabrega-Sanchez et al. . 343/861
2006/0151591 A1 7/2006 Matsuno ..... 235/91 G
2007/0069957 A1 3/2007 Ranta 343/700
2007/0194859 A1 8/2007 Brobston et al. 333/17.3
2007/0197180 A1 * 8/2007 McKinzie et al. 455/248.1

FOREIGN PATENT DOCUMENTS

WO WO 2007/036774 A1 4/2007

* cited by examiner

Primary Examiner—Robert Pascal
Assistant Examiner—Kimberly E Glenn
(74) *Attorney, Agent, or Firm*—Harrington & Smith

(57) **ABSTRACT**

An apparatus including a matching circuit; a first variable reactance component, having a first range of reactance values, and connected to the matching circuit and connectable to an antenna element operable in a first frequency band and a second frequency band; a second variable reactance component, having a second range of reactance values, and connected to the matching circuit; a detector for detecting a parameter, indicative of the impedance of the apparatus, over at least a part of the first range and second range of reactance values; and a controller configured to determine, using information provided by the detector, optimum ratios of second reactance values to first reactance values, at a frequency in the first frequency band, and configured to select a first optimum ratio when the second frequency band is greater than the first frequency band and configured to select a second different optimum ratio when the second frequency band is less than the first frequency band.

21 Claims, 6 Drawing Sheets

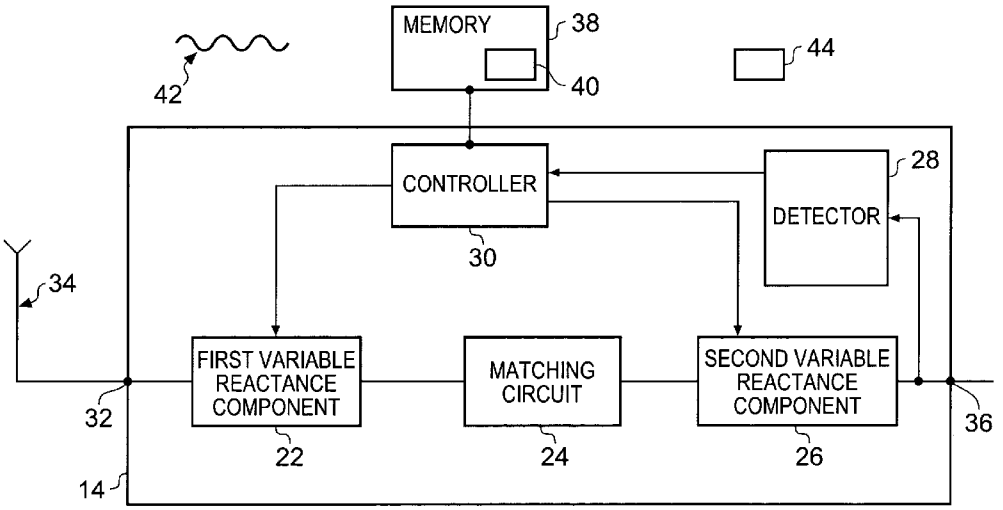

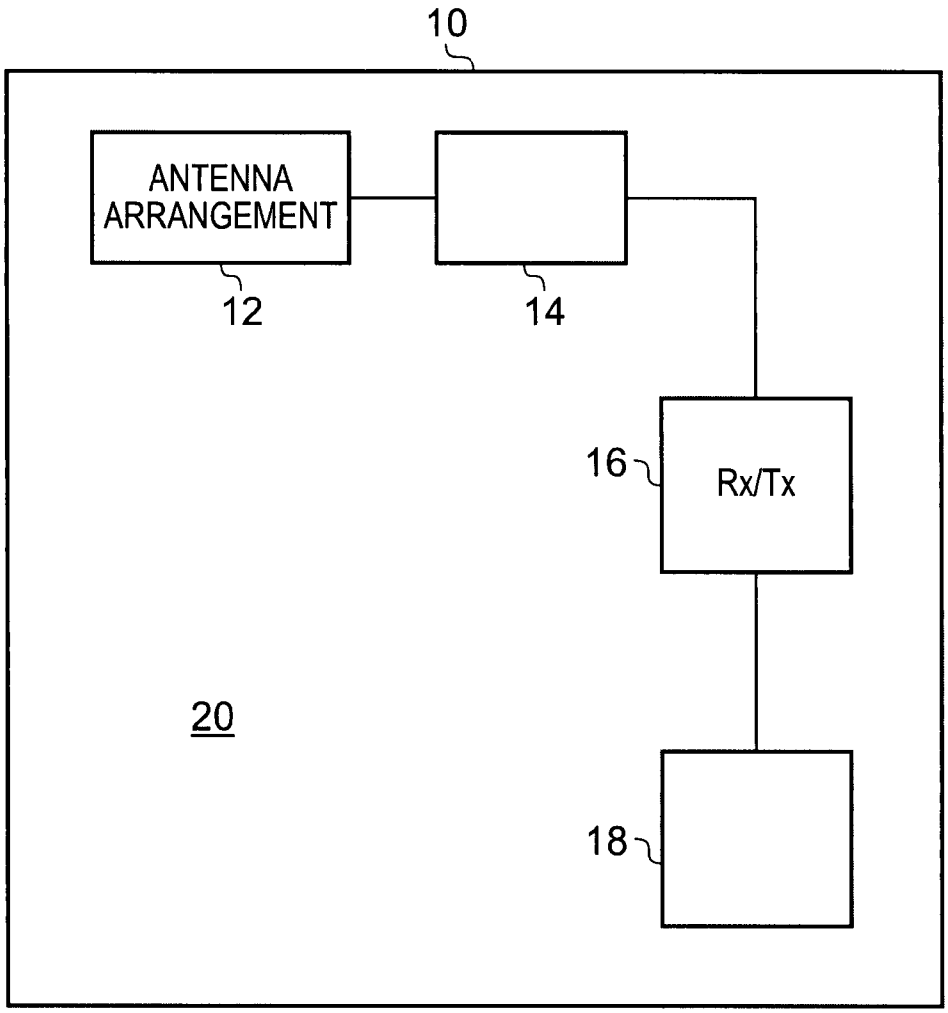

Fig. 1

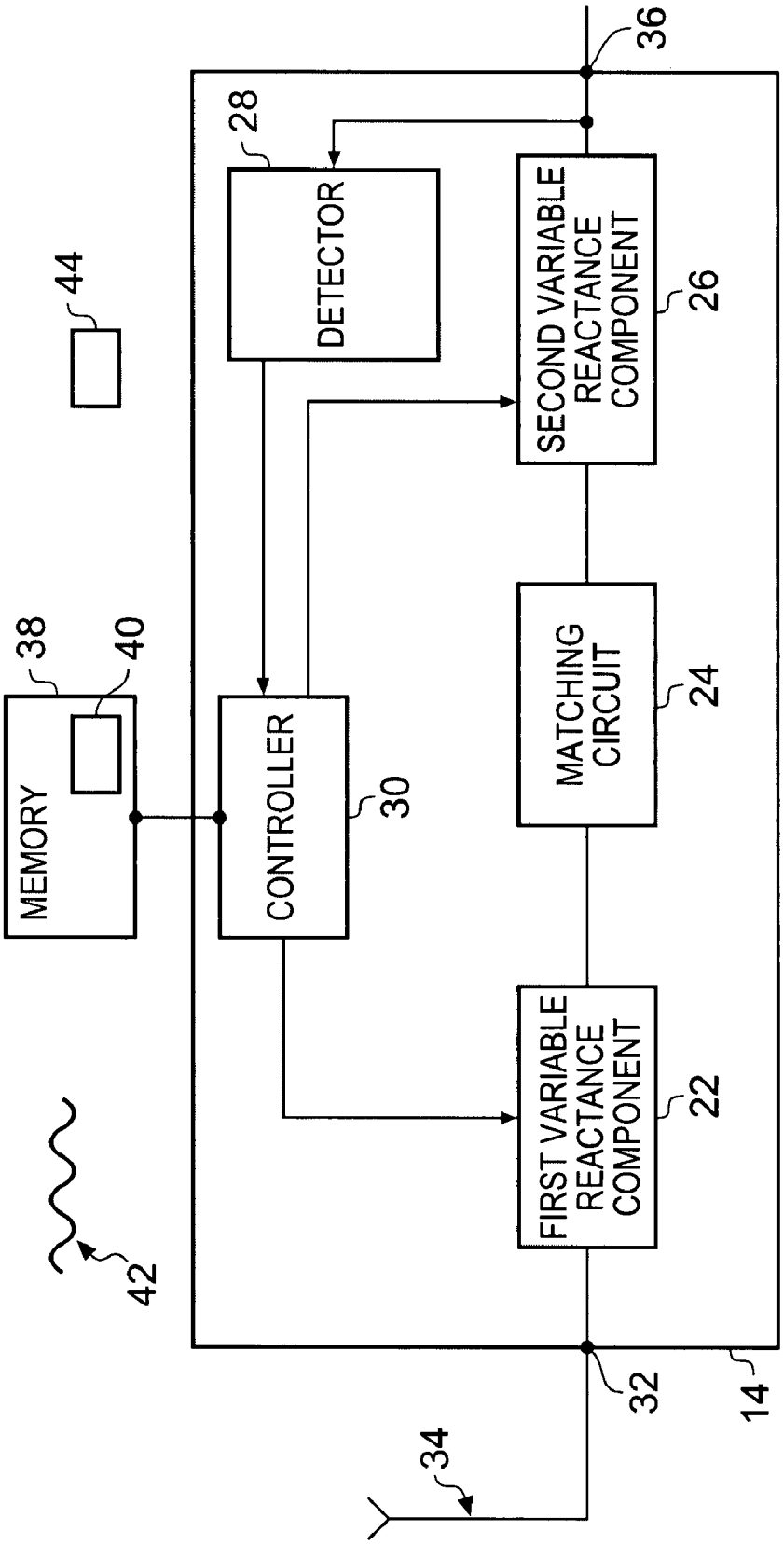
36
28
DETECTOR
SECOND VARIABLE REACTANCE COMPONENT
26
44
38
40
MEMORY
CONTROLLER
30
MATCHING CIRCUIT
24
FIRST VARIABLE REACTANCE COMPONENT
22
42
32
14
34

Fig. 2

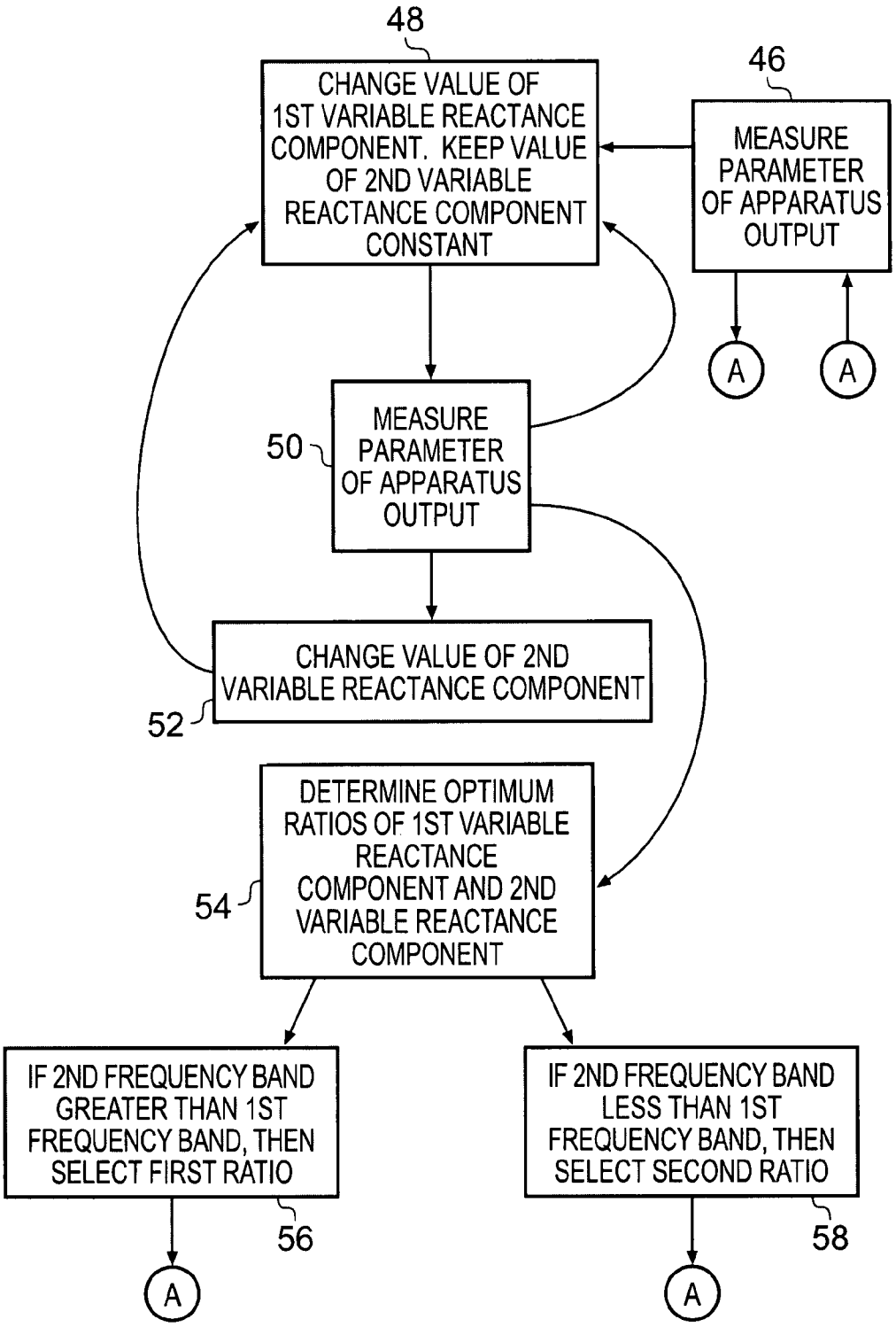
48
CHANGE VALUE OF 1ST VARIABLE REACTANCE COMPONENT. KEEP VALUE OF 2ND VARIABLE REACTANCE COMPONENT CONSTANT
46
MEASURE PARAMETER OF APPARATUS OUTPUT
A
A
50
MEASURE PARAMETER OF APPARATUS OUTPUT
CHANGE VALUE OF 2ND VARIABLE REACTANCE COMPONENT
52
DETERMINE OPTIMUM RATIOS OF 1ST VARIABLE REACTANCE COMPONENT AND 2ND VARIABLE REACTANCE COMPONENT
54
IF 2ND FREQUENCY BAND GREATER THAN 1ST FREQUENCY BAND, THEN SELECT FIRST RATIO
56
IF 2ND FREQUENCY BAND LESS THAN 1ST FREQUENCY BAND, THEN SELECT SECOND RATIO
58
A
A

Fig. 3

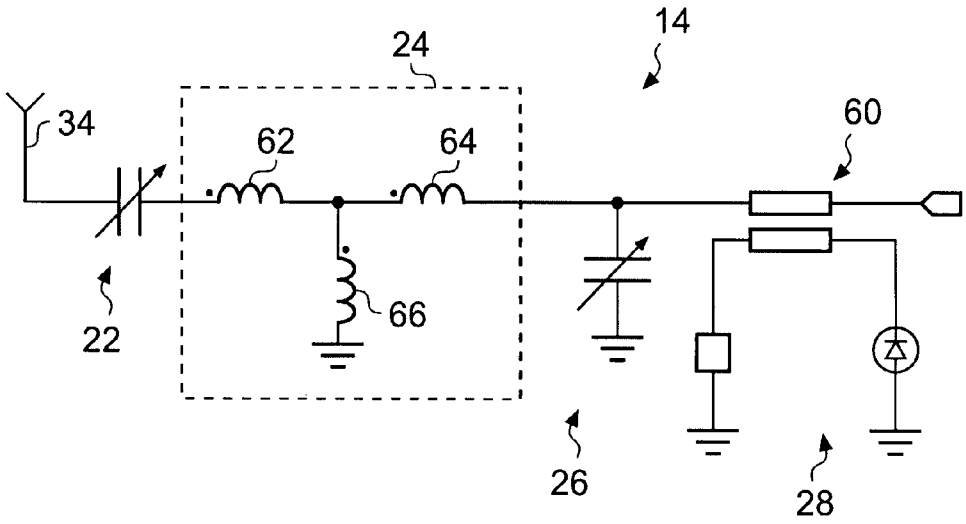

Fig. 4

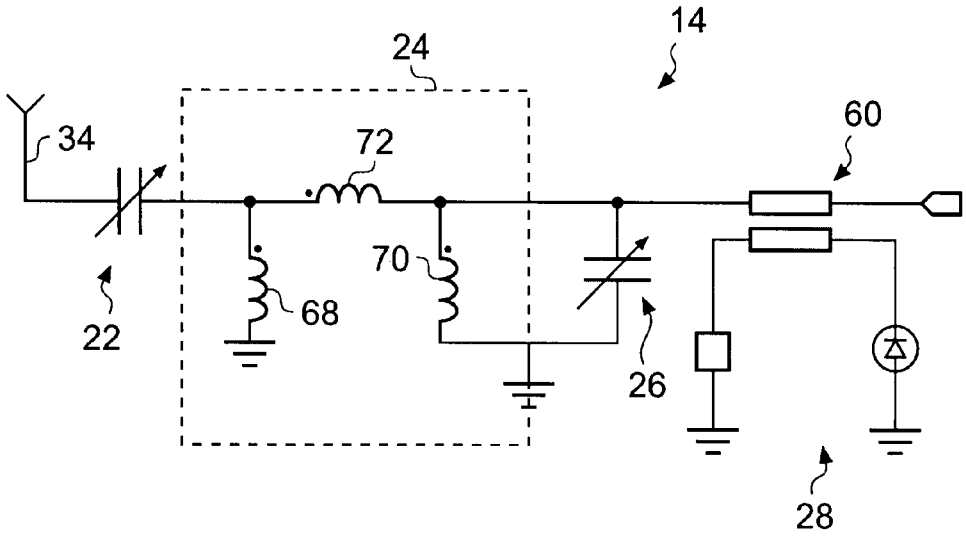

Fig. 5

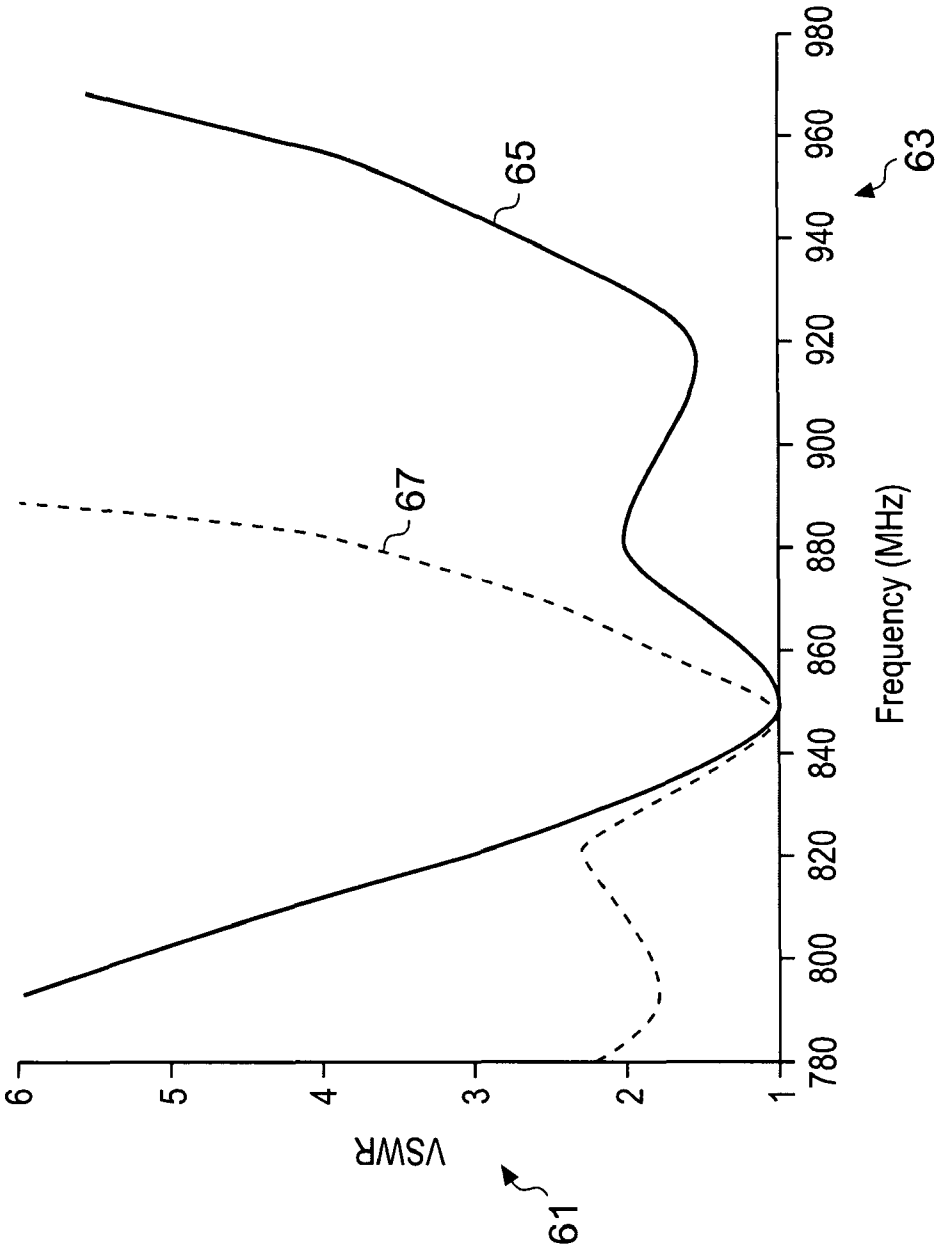
VSWR
6
5
4
3
2
1
61
780
800
820
840
860
880
900
920
940
960
980
Frequency (MHz)
63
65
67

Fig. 6

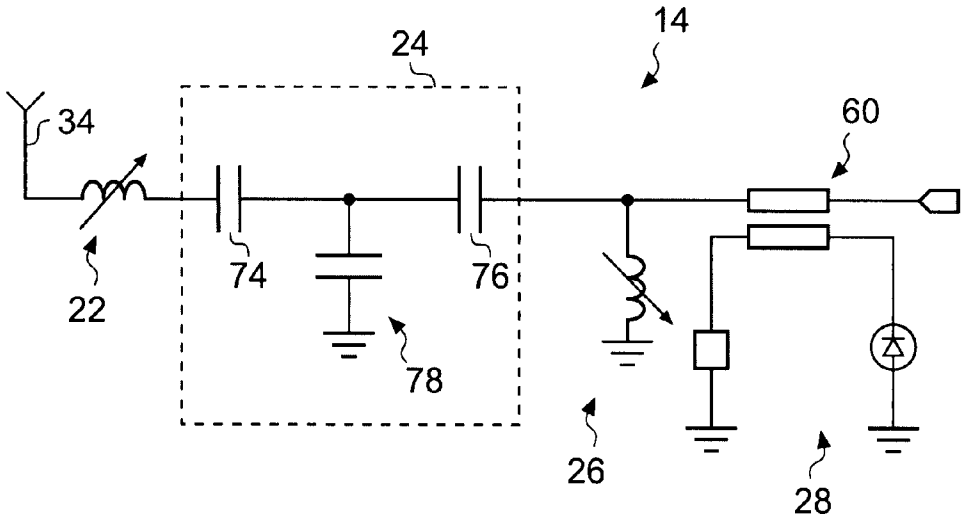

Fig. 7

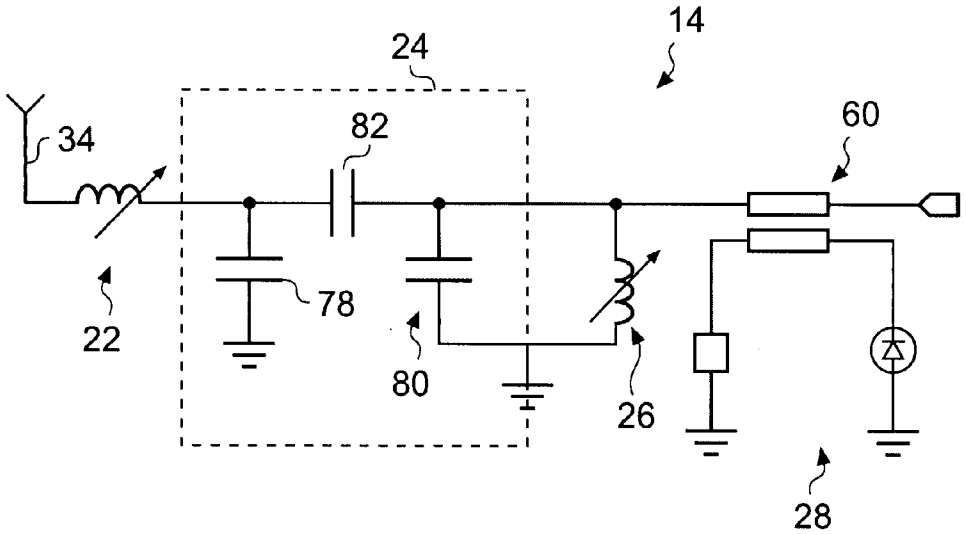

Fig. 8

APPARATUS COMPRISING AN ANTENNA ELEMENT, WHICH EFFICIENTLY PERFORMS AT BOTH A FIRST RESONANT FREQUENCY BAND AND A SECOND RESONANT FREQUENCY BAND, METHOD AND COMPUTER PROGRAM THEREFORE

FIELD OF THE INVENTION

Embodiments of the present invention relate to an apparatus, a method and a computer program. In particular, they relate to an apparatus, method and computer program in a portable radio telephone.

BACKGROUND TO THE INVENTION

Devices such as mobile cellular telephones usually have at least one antenna element by which they can communicate with other devices. If the context of the device changes, the impedance of the antenna element at a desired frequency band may also change. For example, if a user handles the device, the antenna element may electromagnetically couple with the user and the impedance of the antenna element at the desired frequency band may change as a consequence. Consequently, such a device may not be able to communicate efficiently (and may not be able to communicate at all) when the device changes context.

Furthermore, if the antenna element is operable in a first resonant frequency band and a second resonant frequency band, it may be difficult to compensate for the change in impedance of the antenna element so that the antenna element performs efficiently at both the first resonant frequency band and the second resonant frequency band.

Therefore, it would be desirable to provide an alternative device.

BRIEF DESCRIPTION OF THE INVENTION

According to various embodiments of the invention there is provided an apparatus comprising: a matching circuit; a first variable reactance component, having a first range of reactance values, and connected to the matching circuit and connectable to an antenna element operable in a first frequency band and a second frequency band; a second variable reactance component, having a second range of reactance values, and connected to the matching circuit; a detector for detecting a parameter, indicative of the impedance of the apparatus, over at least a part of the first range and second range of reactance values; and a controller configured to determine, using information provided by the detector, optimum ratios of second reactance values to first reactance values, at a frequency in the first frequency band, and configured to select a first optimum ratio when the second frequency band is greater than the first frequency band and configured to select a second different optimum ratio when the second frequency band is less than the first frequency band.

The apparatus may be for wireless communication.

The controller may be configured to determine if the second frequency band is higher or lower than the first frequency band. The detector may be configured to detect the parameter over at least a part of the first range and second range of reactance values at the frequency in the first frequency band.

The controller may be configured to change the reactance value of the first variable reactance component while keeping the reactance value of the second variable reactance component constant. The detector may be arranged to detect the parameter after each change in reactance value of the first variable reactance component. When the first variable reactance component has changed reactance value a predetermined number of times, the controller may be configured to change the reactance value of the second variable reactance component. The detector may be arranged to detect the parameter after the change in reactance value of the second variable reactance component.

The parameter of the apparatus may be the voltage standing wave ratio (VSWR) of the apparatus.

The detector may include a coupler and may be connected to the second variable reactance component.

The first variable reactance component may be a series capacitor. The second variable reactance component may be a shunt capacitor. The controller may be configured to determine two optimum ratios of second reactance values to first reactance values. The controller may be configured to select the numerically higher optimum ratio when the second frequency band is greater than the first frequency band. The controller may be configured to select the numerically lower optimum ratio when the second frequency band is less than the first frequency band.

According to various embodiments of the invention, there is provided a method comprising: detecting a parameter, indicative of the impedance of an apparatus, over at least a part of a first range of reactance values of a first variable reactance component, connected to a matching circuit and connectable to an antenna element operable in a first frequency band and a second frequency band, and over at least a part of a second range of reactance values of a second variable reactance component, connected to the matching circuit; determining, using information provided by the detection, optimum ratios of second reactance values to first reactance values, at a frequency in the first frequency band; selecting a first optimum ratio when the second frequency band is greater than the first frequency band; and selecting a second different optimum ratio when the second frequency band is less than the first frequency band.

The method may comprise determining if the second frequency band is higher or lower than the first frequency band. The detection may be performed at the frequency in the first frequency band.

The method may comprise changing the reactance value of the first variable reactance component while keeping the reactance value of the second variable reactance component constant. The method may comprise detecting the parameter after each change in reactance value of the first variable reactance component. The method may further comprise changing the reactance value of the second variable reactance component when the first variable reactance component has changed reactance value a predetermined number of times. The method may further comprise detecting the parameter after the change in reactance value of the second variable reactance component.

The parameter of the apparatus may be the voltage standing wave ratio (VSWR) of the apparatus.

The first variable reactance component may be a series capacitor. The second variable reactance component may be a shunt capacitor.

The determination may determine two optimum ratios. The method may comprise selecting the numerically higher optimum ratio when the second frequency band is greater than the first frequency band. The method may comprise selecting the numerically lower optimum ratio when the second frequency band is less than the first frequency band.

According to various embodiments of the invention, there is provided a computer program comprising program instructions for controlling a first variable reactance component and

a second variable reactance component and comprising means for detecting a parameter, indicative of the impedance of an apparatus, over at least a part of a first range of reactance values of the first variable reactance component, connected to a matching circuit and connectable to an antenna element operable in a first frequency band and a second frequency band, and over at least a part of a second range of reactance values of the second variable reactance component, connected to the matching circuit; means for determining, using information provided by the detection, optimum ratios of second reactance values to first reactance values, at a frequency in the first frequency band; means for selecting a first optimum ratio when the second frequency band is greater than the first frequency band; and means for selecting a second different optimum ratio when the second frequency band is less than the first frequency band.

According to various embodiments of the invention, there is provided a physical entity embodying the computer program as described in the preceding paragraphs.

According to various embodiments of the invention, there is provided an electromagnetic carrier signal carrying the computer program as described in the preceding paragraphs.

According to various embodiments of the invention, there is provided a computer program comprising program instructions for causing a computer to perform the method as described in the preceding paragraphs.

According to various embodiments of the invention, there is provided a device comprising the apparatus as described in the preceding paragraphs. The device may be for wireless communication.

According to various embodiments of the invention, there is provided a module comprising the apparatus as described in the preceding paragraphs. The module may be for wireless communication.

BRIEF DESCRIPTION OF THE DRAWINGS

For a better understanding of the present invention reference will now be made by way of example only to the accompanying drawings in which:

FIG. **1** illustrates a schematic diagram of a device according to one embodiment of the invention;

FIG. **2** illustrates a schematic diagram of an apparatus according to one embodiment of the invention;

FIG. **3** illustrates a flow diagram of how reactance values of a first variable reactance component and a second variable reactance component are selected according to one embodiment of the invention;

FIG. **4** illustrates a schematic diagram of an apparatus according to another embodiment of the invention;

FIG. **5** illustrates a schematic diagram of an apparatus according to a further embodiment of the invention;

FIG. **6** illustrates a graph of voltage standing wave ratio (VSWR) versus frequency for the antenna element and apparatus illustrated in FIG. **4**;

FIG. **7** illustrates a schematic diagram of an apparatus according to another embodiment of the invention; and

FIG. **8** illustrates a schematic diagram of an apparatus according to a further embodiment of the invention.

DETAILED DESCRIPTION OF EMBODIMENTS OF THE INVENTION

FIGS. **2**, **4**, **5**, **6** and **7** illustrate an apparatus **14** comprising: a matching circuit **24**; a first variable reactance component **22**, having a first range of reactance values, and connected to the matching circuit **24** and connectable to an antenna element **34** operable in a first frequency band and a second frequency band; a second variable reactance component **26**, having a second range of reactance values, and connected to the matching circuit **24**; a detector **28** for detecting a parameter, indicative of the impedance of the apparatus, over at least a part of the first range and second range of reactance values; and a controller **30** configured to determine, using information provided by the detector **28**, optimum ratios of second reactance values to first reactance values, at a frequency in the first frequency band, and configured to select a first optimum ratio when the second frequency band is greater than the first frequency band and configured to select a second different optimum ratio when the second frequency band is less than the first frequency band.

FIG. **1** illustrates a device **10** such as a portable radio device (for example, a mobile cellular telephone or a personal digital assistant), a cellular base station, other radio communication device or module for such devices.

The device **10** comprises an antenna arrangement **12**, an apparatus **14**, a transceiver **16** and functional circuitry **18**. The antenna arrangement **12** includes at least one antenna element which is operable in two different resonant frequency bands. The apparatus **14** is connected to the antenna arrangement **12** and is also connected to the transceiver **16**. The apparatus **14** is configured to adaptively tune the one or more antenna elements in the antenna arrangement **12**. The functional circuitry **18** is connected to the transceiver **16** and is operable to provide signals to, and receive signals from the transceiver **16**.

In the embodiment where the device **10** is a mobile cellular telephone, the functional circuitry **18** may include a processor, a memory and input/output devices such as a microphone, a loudspeaker and a display. The electronic components that provide the apparatus **14**, the transceiver **16** and the functional circuitry **18** are interconnected via a printed wiring board (PWB) **20**. In various embodiments the PWB **20** may be used as a ground plane for the antenna arrangement **12**. In other embodiments, the antenna arrangement **12** may not have a ground plane.

FIG. **2** illustrates a schematic diagram of an apparatus **14** according to one embodiment of the invention. In more detail, the apparatus **14** includes a first variable reactance component **22**, a matching circuit **24**, a second variable reactance component **26**, a detector **28** and a controller **30**.

The first variable reactance component **22** is connected to the matching circuit **24** and to a first interface **32**. The first interface **32** is connectable to an antenna element **34** operable in a first resonant frequency band and a second, different resonant frequency band. The first variable reactance component **22** has a range of reactance values and may be a variable capacitor or a variable inductor.

The second variable reactance component **26** is connected to the matching circuit **24**, to the detector **28** and to a second interface **36**. The second interface **36** is connectable to the transceiver **16**. The second variable reactance component **26** has a range of reactance values and may be a variable capacitor or a variable inductor.

The matching circuit **24** is designed so that when the antenna element **34** is connected to the apparatus **14**, the antenna element **34** is operable in two different resonant frequency bands. The antenna element **34** is a planar inverted L antenna (PILA). In other embodiments, the antenna element **34** may be any other suitable antenna element which has an impedance (when not connected to any device or apparatus) of more than or less than 50 Ohms at the desired resonant frequency bands (i.e. the antenna element is naturally non-resonating at the desired resonant frequency bands because

its impedance at the desired resonant frequency bands is substantially greater than or less than 50 Ohms).

The antenna arrangement **12** may include additional antenna elements and may include any combination of planar inverted F antennas (PIFA's), inverted F antennas (IFA's), whip antennas, loop antennas, helix antennas, monopole antennas, slot antennas, notch antennas and dielectric resonator antennas (DRA's).

The antenna arrangement **12** may be arranged to operate in a plurality of different operational radio frequency bands and via a plurality of different protocols. In various embodiments, the antenna arrangement **12** includes a plurality of antenna elements which may operate according to different protocols (multiradio device) or the same protocol (diversity/MIMO). For example, the different frequency bands and protocols may include (but are not limited to) DVB-H 470 to 750 MHz, US-GSM 850 (824-894 MHz); EGSM 900 (880-960 MHz); GPS 1572.42 MHz, PCN/DCS1800 (1710-1880 MHz); US-WCDMA1900 (1850-1990) band; WCDMA2100 band (Tx: 1920-1980 Rx: 2110-2180); PCS1900 (1850-1990 MHz); 2.5 GHz WLAN/BT, 5 GHz WLAN, DRM (0.15-30.0 MHz), FM (76-108 MHz), AM (0.535-1.705 MHz), DVB-H [US] (1670-1675 MHz), WiMax (2300-2400 MHz, 2305-2360 MHz, 2496-2690 MHz, 3300-3400 MHz, 3400-3800 MHz, 5150-5875 MHz), RFID (LF [125-134 kHz], HF [13.56 MHz]) UHF [433 MHz, 865-956 MHz or 2.45 GHz), and UWB 3.0 to 10.6 GHz. The antenna element **34** may be operable in any of the above mentioned frequencies.

The detector **28** is connected to the second variable reactance component **26** to detect a parameter indicative of the impedance of the apparatus **14**. The detector **28** is also connected to the controller **30** to provide the detection information to the controller **30**.

The controller **30** may be a microprocessor or any other suitable circuitry. For example, the controller **30** may alternatively be a hardwired logic circuit. The controller **30** is connected to, and operable to control the first variable reactance component **22** and the second variable reactance component **26**. The controller **30** is also connected to a memory **38**. It should be appreciated that the controller **30** and the memory **38** may be part of the functional circuitry **18** or may be circuitry dedicated solely to the apparatus **14**.

The memory **38** stores computer program instructions **40**, which when loaded into the controller **30**, enable the controller **30** to control the operation of the apparatus **14** as described below. The computer program instructions **40** provide the logic and routines that enables the apparatus **14** to perform the method illustrated in FIG. **3**.

The computer program instructions **40** may arrive at the device **10** via an electromagnetic carrier signal **42** or be copied from a physical entity **44** such as a computer program product, a memory device or a record medium such as a CD-ROM or DVD.

The apparatus **14** is configured to adaptively tune the antenna element **34** so that it efficiently resonates in two predetermined resonant frequency bands. The process carried out by the apparatus **14** will be described in the following paragraphs with reference to FIGS. **2** and **3**. The blocks illustrated in FIG. **3** may represent steps in a method and/or sections of code in the computer program **40**. The illustration of a particular order to the blocks does not necessarily imply that there is a required or preferred order for the blocks and the order and arrangement of the blocks may be varied.

Initially at step **46**, the detector **28** detects a parameter of the apparatus **14** (indicative of the impedance of the apparatus **14**) at a frequency in the first frequency band of the antenna element **34**. If the detected parameter does not fulfill predetermined criteria, the process moves to step **48**. If the detected parameter does fulfill the predetermined criteria, the process loops back to step **46**. In other embodiments, the process may always move to step **48** from step **46** and there may be no determination of whether the detected parameter fulfils predetermined criteria.

In various embodiments, the parameter is the voltage standing wave ratio (VSWR) of the apparatus **14** as measured at the second interface **36**. In one embodiment, if the detected VSWR exceeds a threshold value, the process moves to step **48** and if the detected VSWR is less than the threshold value, the process loops back to step **46**.

In various embodiments, the first frequency band of the antenna element **34** is used by the device **10** for transmission and the second frequency band of the antenna element **34** is used for reception. For example, in WCDMA2100 the transmission band is 1920-1980 MHz and the reception band is 2110-2180 MHz. In this embodiment, the VSWR of the apparatus **14** is measured while transmitting at a frequency in the first frequency band.

At step **48**, the controller **30** controls the first variable reactance component **22** to change reactance value and controls the second variable reactance component **26** to maintain a constant reactance value. The process then moves to step **50** and the parameter of the apparatus **14** is measured and stored in the memory **38**. The process then loops back to step **48** and the above steps are repeated until the parameter of the apparatus **14** has been measured (and stored) at each reactance value in the first reactance range (or a desired portion of the first reactance range) at a constant reactance value of the second variable reactance component **26**.

Subsequently at step **52**, the controller **30** controls the second variable reactance component **26** to change reactance value within the second range of reactance values and the parameter of the apparatus **14** is measured and stored. The process then moves to step **48** and the process in the preceding paragraph is repeated for the new reactance value of the second variable reactance component. Once the parameter has been measured at the reactance values of the first variable reactance component **22** at the new reactance value of the second variable reactance component **26**, the controller **30** controls the second variable reactance component **26** to change reactance value again and the process of changing the reactance value of the first variable reactance component **22** and measuring the parameter of the apparatus **14** is repeated.

Consequently, the controller **30** controls the first and second variable reactance components **22** and **26** so that the parameter can be measured across the whole, or a desired part, of the first and second reactance ranges. The above method produces a list of reactance values for the first and second variable reactance components **22**, **26** and their corresponding measured parameter value. At step **54**, the controller **30** analyses the measured parameter values and determines the pairs of optimum reactance values. Since the measured parameter is indicative of the impedance of the apparatus **14**, the controller **30** selects the parameter values (and hence pairs of reactance values) which correspond to a desired impedance for the apparatus **14** (for example, 50 Ohms). The determination at step **54** produces two pairs of reactance values. The controller **30** then processes the pairs of reactance values into ratios of the second variable reactance component value to the first variable reactance component value (i.e. Component **26**: Component **22**).

At step **56**, the controller **30** determines if the second frequency band is greater than the first frequency band. If this is true, the controller **30** selects a first ratio and controls the

first and second variable reactance components **22**, **26** to have the reactance values measured for that ratio.

At step **58**, the controller **30** determines if the second frequency band is less than the first frequency band. If this is true, the controller **30** selects a second ratio (different to the first ratio) and controls the first and second variable reactance components to have the reactance values measured for that ratio.

The selection of an optimum ratio of reactance values is dependent upon (at least partially) the actual circuitry used in the apparatus **14**. This will be explained in more detail in the following paragraphs with respect to FIGS. **4** to **7**.

It should be appreciated that the determination of whether the second frequency band is greater than or less than the first frequency band may have alternatively been determined prior to the initialization of the method at step **46** (for example) or during another step of the method.

After steps **56** and **58**, the process moves back to step **46** and is repeated.

Embodiments of the present invention provide an advantage in that they provide adaptive tuning of an antenna element. The apparatus **14** is configured to detect changes in impedance of an antenna element and then reactively compensate for the changes in impedance. This may result in the device operating more efficiently (since the electrical energy supplied to the antenna element will be maximized) and effectively (the signal strength of the antenna element may be improved).

Furthermore, embodiments of the present invention provide an advantage in that they are able to compensate for changes in the impedance of a dual band antenna element and optimize the antenna in both resonant frequency bands. This is achieved by measuring a parameter (indicative of the impedance of the antenna element) at only a single frequency and then selecting a pair of reactance values which are optimum for both resonant frequency bands.

FIG. **4** illustrates a schematic diagram of one embodiment of an apparatus according to the present invention. In this embodiment, the first variable reactance component is a variable series capacitor **22** and the second variable reactance component is a variable shunt capacitor **26**. The detector **28** includes a coupler **60** and is configured to detect the VSWR of the apparatus **14**. The matching circuit **24** is a T type matching circuit and includes a series inductor **62** connected to the variable serial capacitor **22**, a series inductor **64** connected to the variable shunt capacitor **26** and a shunt inductor **66** connected to the series inductor **62** and to the series inductor **64**.

FIG. **5** illustrates a schematic diagram of another embodiment of an apparatus according to the present invention. This embodiment is similar to the embodiment illustrated in FIG. **4** and where the features are similar, the same reference numerals are used. In this embodiment, the matching circuit **24** is a Pi type matching circuit and includes a shunt inductor **68** connected to the variable series capacitor **22**, a shunt inductor **70** connected, in parallel, with the variable shunt capacitor **26** and a series inductor **72** connected to the shunt inductor **68** and to the shunt inductor **70**.

At steps **56** and **58** in the embodiments illustrated in FIGS. **4** and **5**, if the second frequency band is greater than the first frequency band, it is desirable to use a capacitor ratio (variable shunt capacitor **26**: variable series capacitor **22**) which provides a higher operational frequency band (so that the desired second frequency band is encompassed within that frequency band). Consequently, the controller **30** selects the numerically higher ratio because the higher ratio has the effect of electrically shortening the antenna element (when compared to the numerically lower ratio) and thereby increases the frequencies of the operational frequency band.

If the second frequency band is less than the first frequency band, it is desirable to use a capacitor ratio (variable shunt capacitor **26**: variable series capacitor **22**) which provides a lower operational frequency band (so that the desired second frequency band is encompassed within that frequency band). Consequently, the controller **30** selects the numerically lower ratio because the lower ratio has the effect of electrically lengthening the antenna element (when compared to the numerically higher ratio) and thereby decreases the frequencies of the operational frequency band.

FIG. **6** illustrates a graph of voltage standing wave ratio (VSWR) versus frequency for the embodiment illustrated in FIG. **4**. The graph includes a vertical Y axis **61** for the voltage standing wave ratio and an X axis **63**, orthogonal to the Y axis **61**, for the frequency of the antenna element **34**.

The VSWR for a plurality of frequencies is plotted for the two optimum ratios of shunt capacitor **26** value to series capacitor **22** value. In this embodiment, the VSWR was measured at the transmission frequency of approximately 850 MHz. The series inductor **62** has an inductance of 8 nH, the series inductor **64** has an inductance of 0.6 nH and the shunt inductor **66** has an inductance of 0.4 nH.

For the first optimum ratio, the series capacitor **22** has a capacitance of 24 pF and the shunt capacitor has a capacitance of 32.5 pF. Consequently, the first optimum ratio has a value of 1.35 and its plot of VSWR versus frequency is represented by the solid line **65**. The solid line **65** has a first minima at approximately 850 MHz and a second minima at approximately 915 MHz.

For the second optimum ratio, the series capacitor **22** has a capacitance of 100 pF and the shunt capacitor **26** has a capacitance of 38.5 pF. Consequently, the second optimum ratio has a value of 0.39 and its plot of VSWR versus frequency is represented by the dotted line **67**. The dotted line **67** has a first minima at approximately 790 MHz and a second minima at approximately 850 MHz.

In this embodiment, if the desired second frequency band is greater than the first frequency band (850 MHz in this example) the controller **30** selects the first optimum ratio (the numerically highest ratio) because it has a minima at a frequency (915 MHz in this example) greater than the first frequency band and thereby covers the desired second frequency band. If the desired second frequency band is less than the first frequency band the controller **30** selects the second optimum ratio (the numerically lowest ratio) because it has a minima at a frequency (790 MHz in this example) which is less than the first frequency band and thereby covers the desired second frequency band.

FIG. **7** illustrates a schematic diagram of a further embodiment of an apparatus according to the present invention. In this embodiment, the first variable reactance component is a variable series inductor **22** and the second variable reactance component is a variable shunt inductor **26**. The detector **28** includes a coupler **60** and is configured to detect the VSWR of the apparatus **14**. The matching circuit **24** is a T type matching circuit and includes a series capacitor **74** connected to the variable series inductor **22**, a series capacitor **76** connected to the variable shunt inductor **26** and a shunt capacitor **78** connected to the variable series inductor **22** and to the series capacitor **76**.

FIG. **8** illustrates a schematic diagram of another embodiment of an apparatus according to the present invention. This embodiment is similar to the embodiment illustrated in FIG. **6** and where the features are similar, the same reference numerals are used. In this embodiment, the matching circuit

24 is a Pi type matching circuit and includes a shunt capacitor 78 connected to the variable series inductor 22, a shunt capacitor 80 connected, in parallel, with the variable shunt inductor 26 and a series capacitor 82 connected to the shunt capacitor 78 and to the shunt capacitor 80.

At steps 56 and 58 in the embodiments illustrated in FIGS. 7 and 8, if the second frequency band is greater than the first frequency band, it is desirable to use an inductor ratio (variable shunt inductor 26: variable series inductor 22) which provides a higher operational frequency band (so that the desired second frequency band is encompassed within that frequency band). Consequently, the controller 30 selects the numerically lower ratio because the lower ratio has the effect of electrically shortening the antenna element (when compared to the numerically higher ratio) and thereby increases the frequencies of the operational frequency band.

If the second frequency band is less than the first frequency band, it is desirable to use an inductor ratio (variable shunt inductor 26: variable series inductor 22) which provides a lower operational frequency band (so that the desired second frequency band is encompassed within that frequency band). Consequently, the controller 30 selects the numerically higher ratio because the higher ratio has the effect of electrically lengthening the antenna element (when compared to the numerically lower ratio) and thereby decreases the frequencies of the operational frequency band.

Although embodiments of the present invention have been described in the preceding paragraphs with reference to various examples, it should be appreciated that modifications to the examples given can be made without departing from the scope of the invention as claimed.

Features described in the preceding description may be used in combinations other than the combinations explicitly described.

Whilst endeavoring in the foregoing specification to draw attention to those features of the invention believed to be of particular importance it should be understood that the Applicant claims protection in respect of any patentable feature or combination of features hereinbefore referred to and/or shown in the drawings whether or not particular emphasis has been placed thereon.

We claim:

1. An apparatus comprising:

a matching circuit;

a first variable reactance component, having a first range of reactance values, and connected to the matching circuit and connectable to an antenna element operable in a first frequency band and a second frequency band;

a second variable reactance component, having a second range of reactance values, and connected to the matching circuit;

a detector for detecting a parameter, indicative of an impedance of the apparatus, over at least a part of the first range and second range of reactance values; and

a controller configured to determine, using information provided by the detector, optimum ratios of the second reactance values to the first reactance values, at a frequency in the first frequency band, and configured to select a first optimum ratio when the second frequency band is greater than the first frequency band and configured to select a second different optimum ratio when the second frequency band is less than the first frequency band.

2. An apparatus as claimed in claim 1, wherein the controller is configured to determine if the second frequency band is higher or lower than the first frequency band.

3. An apparatus as claimed in claim 1, wherein the detector is configured to detect the parameter over at least a part of the first range and second range of reactance values at the frequency in the first frequency band.

4. An apparatus as claimed in claim 1, wherein the controller is configured to change the reactance value of the first variable reactance component while keeping the reactance value of the second variable reactance component constant, and the detector is arranged to detect the parameter after each change in reactance value of the first variable reactance component.

5. An apparatus as claimed in claim 4, wherein when the first variable reactance component has changed reactance value a predetermined number of times, the controller is configured to change the reactance value of the second variable reactance component and the detector is arranged to detect the parameter after the change in reactance value of the second variable reactance component.

6. An apparatus as claimed in claim 1, wherein the parameter of the apparatus is a voltage standing wave ratio (VSWR) of the apparatus.

7. An apparatus as claimed in claim 1, wherein the detector includes a coupler and is connected to the second variable reactance component.

8. An apparatus as claimed in claim 1, wherein the first variable reactance component is a series capacitor and the second variable reactance component is a shunt capacitor.

9. An apparatus as claimed in claim 8, wherein the controller is configured to determine two optimum ratios, the first optimum ratio and the second different optimum ratio, and is configured to select a numerically higher optimum ratio when the second frequency band is greater than the first frequency band, and is configured to select the a numerically lower optimum ratio when the second frequency band is less than the first frequency band.

10. A device comprising the apparatus as claimed in claim 1.

11. A module comprising the apparatus as claimed in claim 1.

12. A method comprising:

detecting a parameter, indicative of an impedance of an apparatus, over at least a part of a first range of reactance values of a first variable reactance component, connected to a matching circuit and connectable to an antenna element operable in a first frequency band and a second frequency band, and over at least a part of a second range of reactance values of a second variable reactance component, connected to the matching circuit;

determining, using information provided by the detection, optimum ratios of the second reactance values to the first reactance values, at a frequency in the first frequency band;

selecting a first optimum ratio when the second frequency band is greater than the first frequency band; and

selecting a second different optimum ratio when the second frequency band is less than the first frequency band.

13. A method as claimed in claim 12, comprising determining if the second frequency band is higher or lower than the first frequency band.

14. A method as claimed in claim 1, wherein the detection is performed at the frequency in the first frequency band.

15. A method as claimed in claim 12, comprising changing the reactance value of the first variable reactance component while keeping the reactance value of the second variable reactance component constant, and detecting the parameter after each change in reactance value of the first variable reactance component.

16. A method as claimed in claim **15**, further comprising changing the reactance value of the second variable reactance component when the first variable reactance component has changed reactance value a predetermined number of times and detecting the parameter after the change in reactance value of the second variable reactance component.

17. A method as claimed in claim **12**, wherein the parameter of the apparatus is a voltage standing wave ratio (VSWR) of the apparatus.

18. A method as claimed in claim **12**, wherein the first variable reactance component is a series capacitor and the second variable reactance component is a shunt capacitor.

19. A method as claimed in claim **18**, wherein the determination determines two optimum ratios, the first optimum ratio and the second different optimum ratio, and the method comprises selecting a numerically higher optimum ratio when the second frequency band is greater than the first frequency band, and selecting a numerically lower optimum ratio when the second frequency band is less than the first frequency band.

20. A computer program embodied on a computer readable medium, the computer program comprising program instructions for use with a controller of an apparatus, the program code configured to cause the controller to perform:

receiving a detected parameter from a detector in the apparatus, the apparatus comprising the controller, the detector, a first variable reactance component connected to a matching circuit and connectable to an antenna element operable in a first frequency band and a second frequency band, and comprising a second variable reactance component connected to the matching circuit, the parameter indicative of an impedance of the apparatus, over at least a part of a first range of reactance values of the first variable reactance component, and over at least a part of a second range of reactance values of the second variable reactance component, connected to the matching circuit;

determining, using information provided by the detection, optimum ratios of the second reactance values to the first reactance values, at a frequency in the first frequency band;

selecting a first optimum ratio when the second frequency band is greater than the first frequency band;

selecting a second different optimum ratio when the second frequency band is less than the first frequency band; and

controlling the first variable reactance component and the second variable reactance component using the selected first or second optimum ratio.

21. A mobile telephone physical entity embodying the computer program as claimed in claim **20**.

* * * * *