US 20140341578A1

(19) United States

(12) Patent Application Publication

Ho et al.

(10) Pub. No.: US 2014/0341578 A1

(43) Pub. Date: Nov. 20, 2014

(54) **ALIGNING AND DIRECTLY OPTICALLY COUPLING PHOTODETECTORS TO OPTICAL DEMULTIPLEXER OUTPUTS IN A MULTICHANNEL RECEIVER OPTICAL SUBASSEMBLY**

(71) Applicant: **Applied Optoelectronics, Inc.**, Sugar Land, TX (US)

(72) Inventors: **I-Lung Ho**, Sugar Land, TX (US); **Luohan Peng**, Cypress, TX (US); **Joyce Li**, Houston, TX (US)

(73) Assignee: **Applied Optoelectronics, Inc.**, Sugar Land, TX (US)

(21) Appl. No.: **14/088,883**

(22) Filed: **Nov. 25, 2013**

Related U.S. Application Data

(63) Continuation-in-part of application No. 13/893,802, filed on May 14, 2013.

Publication Classification

(51) **Int. Cl.**

H04J 14/02 (2006.01)

H04B 10/60 (2006.01)

(52) **U.S. Cl.**

CPC ***H04J 14/0239*** (2013.01); ***H04B 10/60*** (2013.01)

USPC **398/68**

(57) **ABSTRACT**

A multi-channel receiver optical subassembly (ROSA) such as an arrayed waveguide grating (AWG), with outputs directly optically coupled to respective photodetectors such as photodiodes. In one embodiment, an AWG may be configured such that optical components of the AWG do not interfere with direct optical coupling, and the wire bonding points on the photodiodes may also be configured such that wire bonding does not interfere with direct optical coupling. The photodetectors may also be mounted on a photodetector mounting bar with a pitch sufficiently spaced to allow connection to floating grounds. A passive alignment technique may be used to determine the mounting locations on the photodetector mounting bar such that the photodetectors are aligned with the optical outputs.

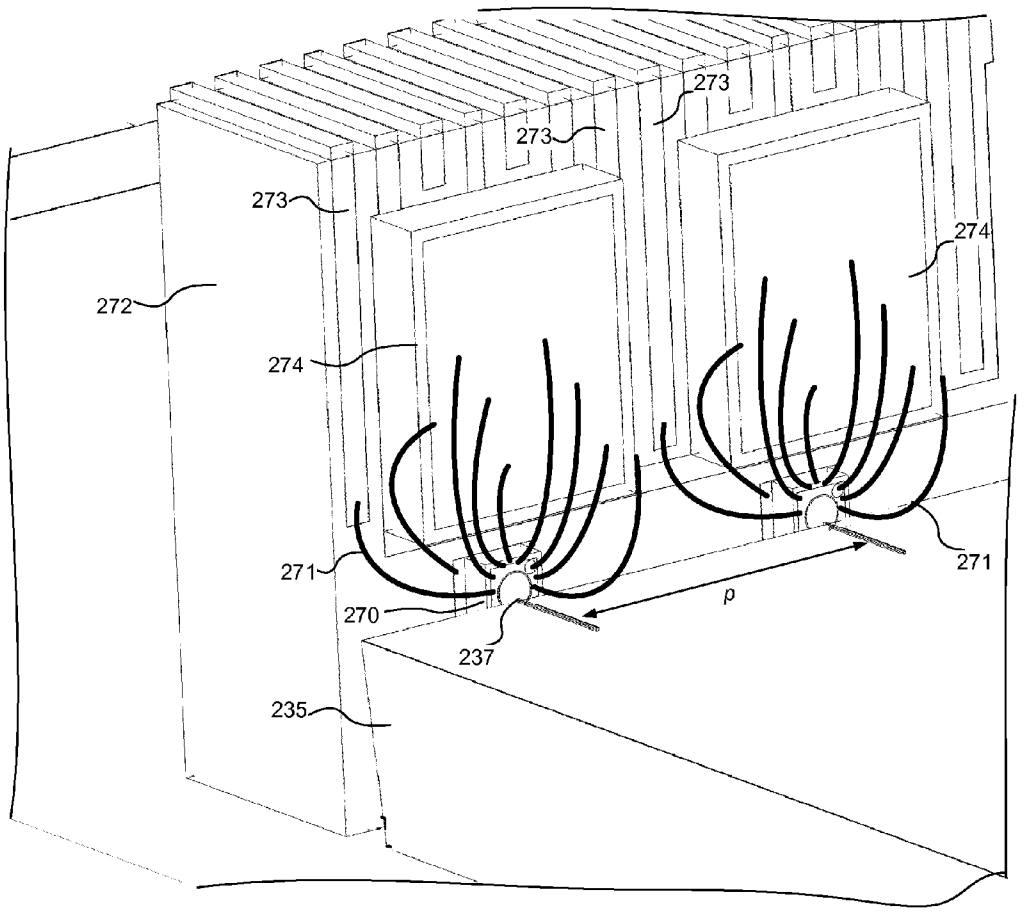

ACCELIGHT-1006
Accelight Techs., Inc. v. Applied Optoelectronics, Inc.
IPR2025-01566

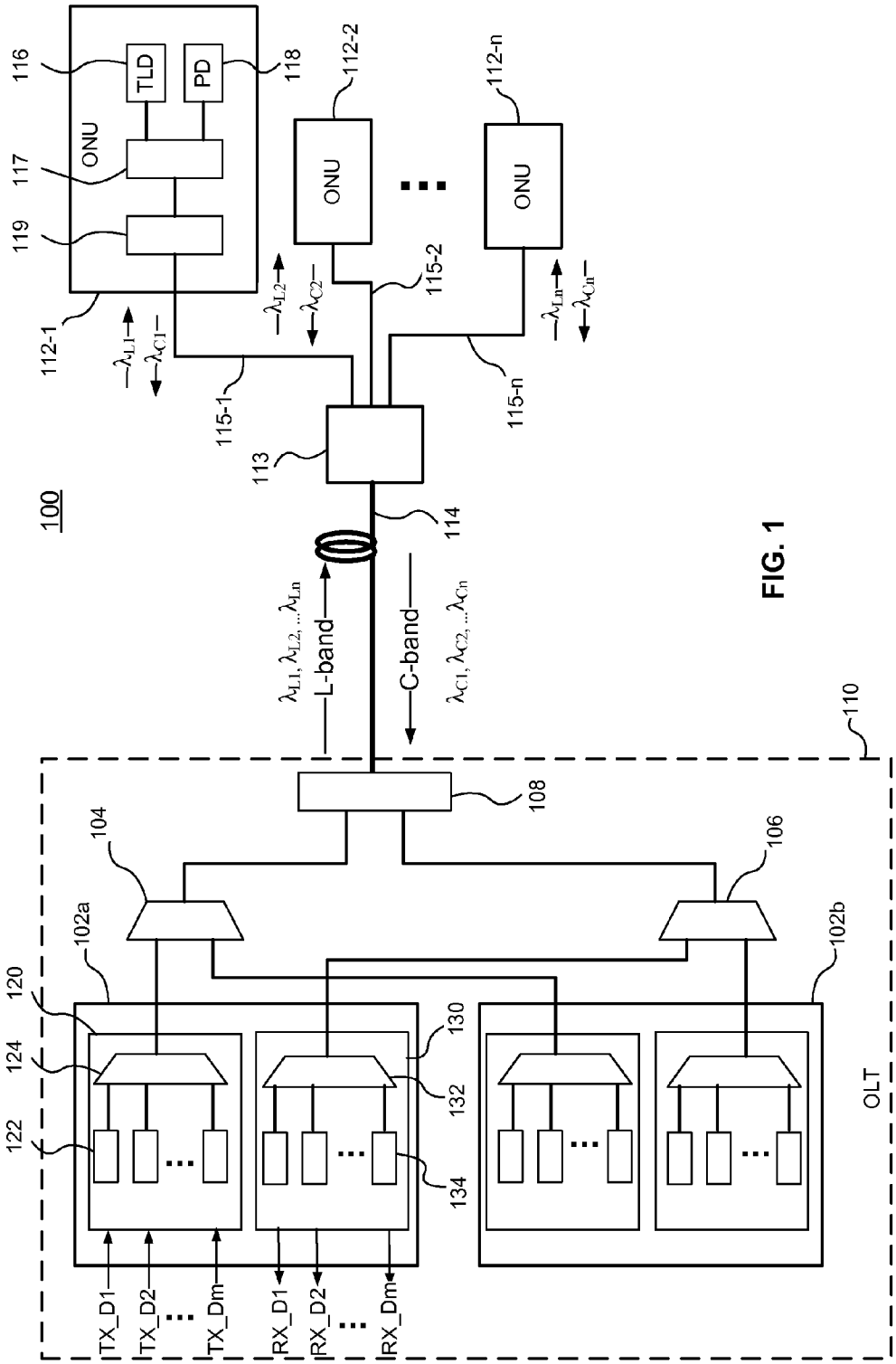
100
ONU
TLD
PD
116
117
118
119
112-1
112-2
112-n
115-1
115-2
115-n
113
114
L-band
C-band
108
110
104
106
102a
102b
120
122
124
130
132
134
OLT
TX_D1
TX_D2
TX_Dm
RX_D1
RX_D2
RX_Dm

FIG. 1

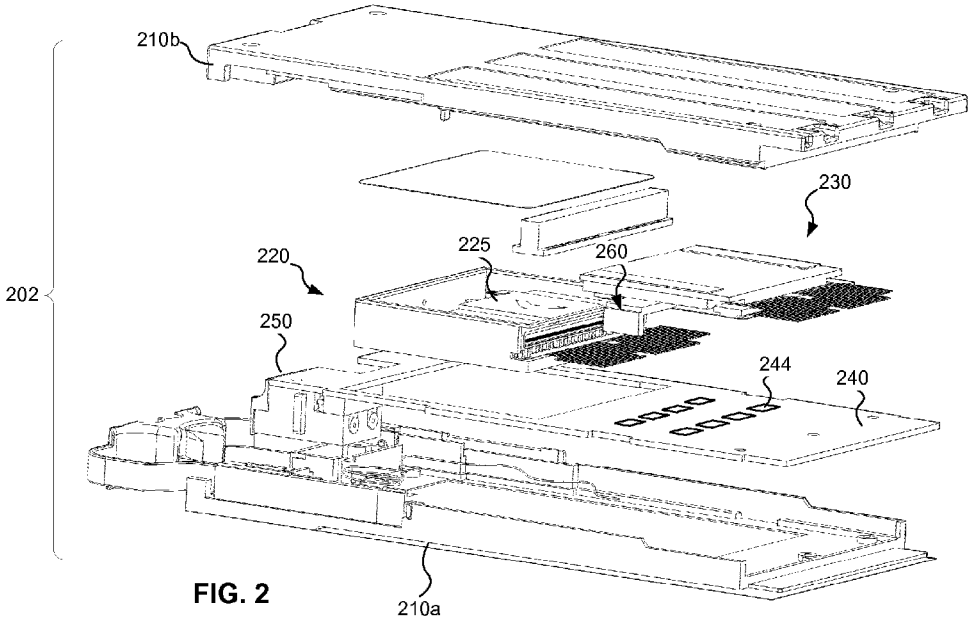
210b
230
225
260
220
202
250
244
240
210a

FIG. 2

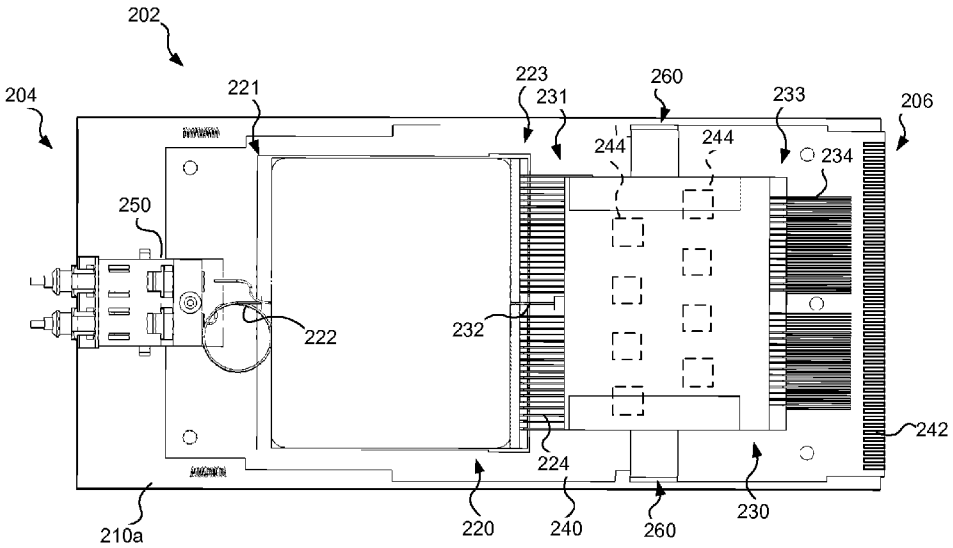
202
204
221
223
231
260
233
206
244
244
234
250
222
232
242
224
210a
220
240
260
230

FIG. 3

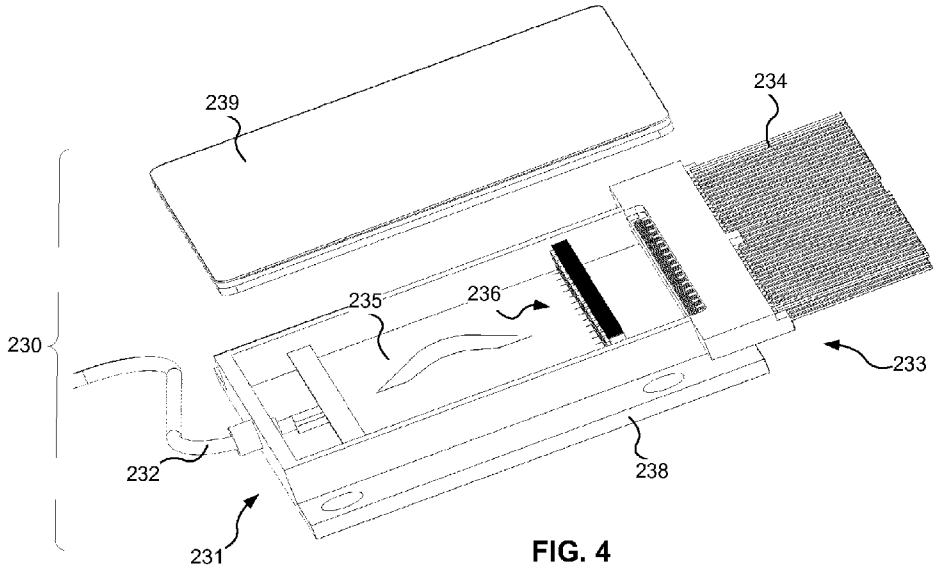
239
234
230
235
236
233
232
238
231

FIG. 4

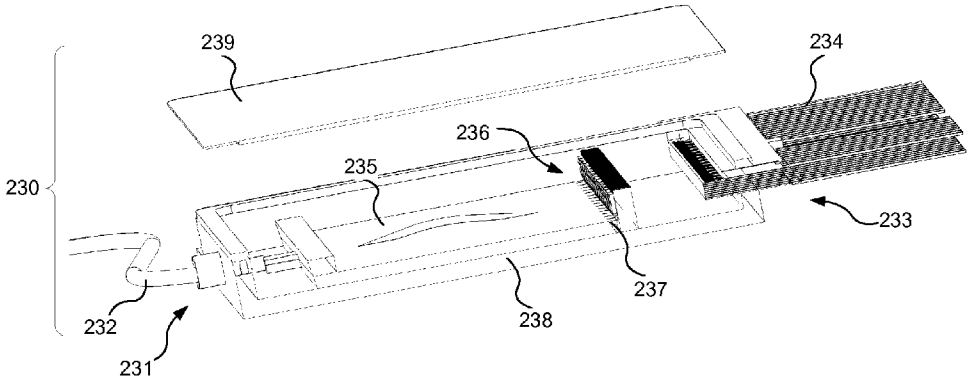
239
234
236
230
235
233
237
232
238
231

FIG. 5

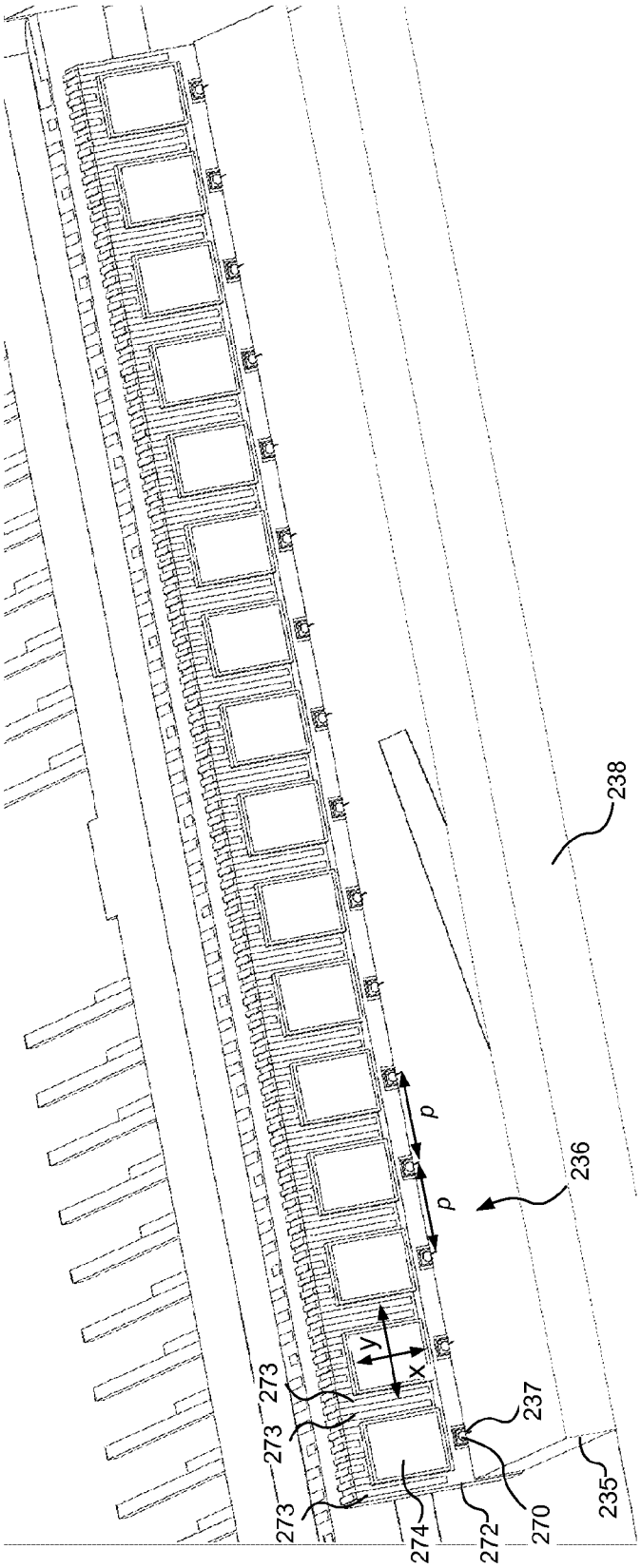

FIG. 6

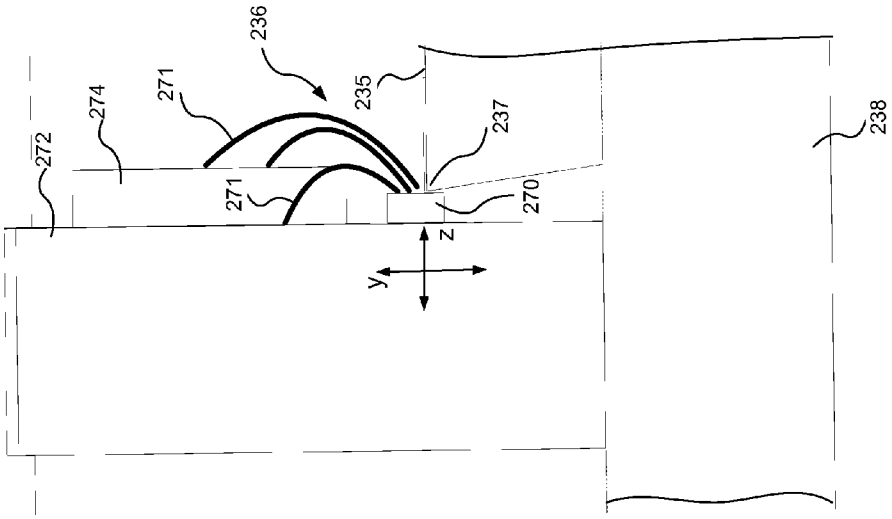
236
271
274
272
271
235
237
270
z
y
238

FIG. 8

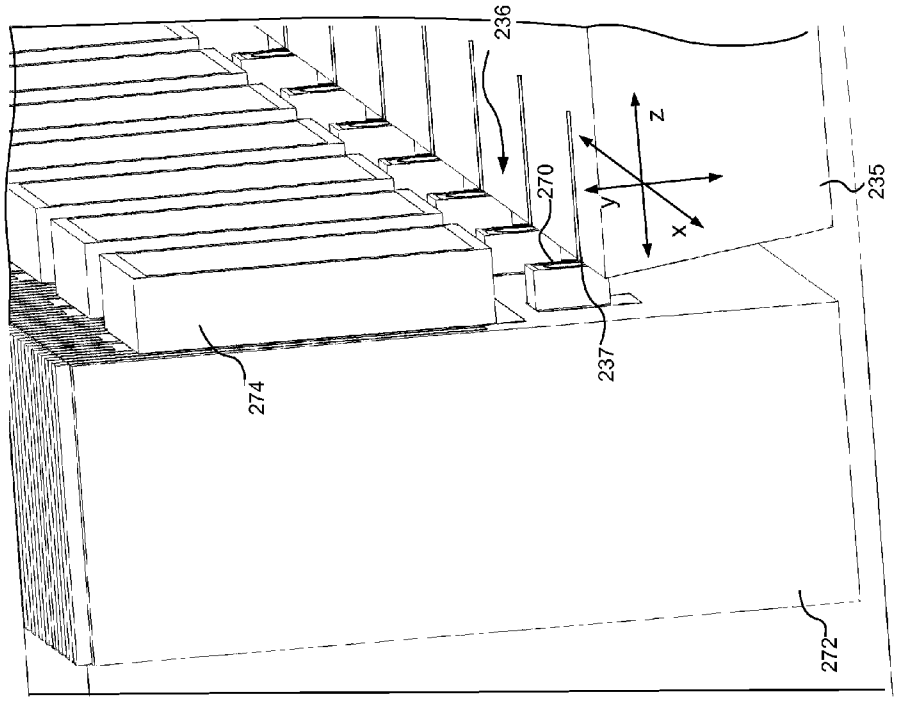
236
270
z
y
x
235
237
274
272

FIG. 7

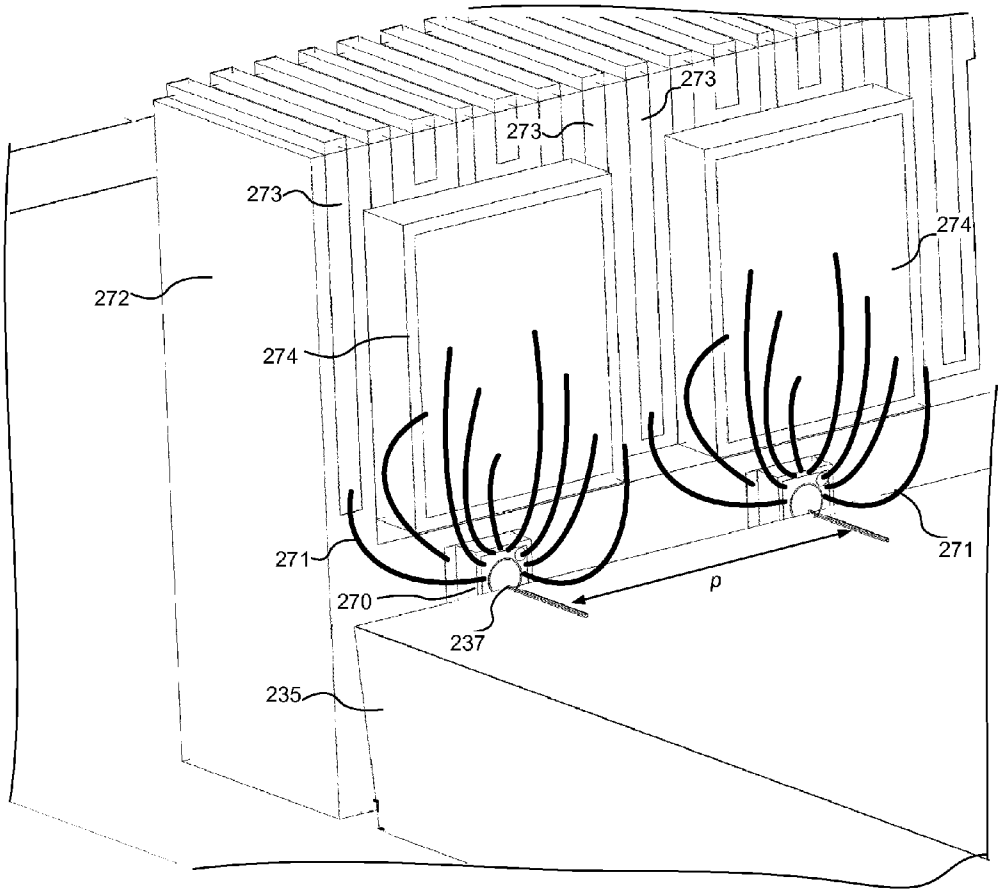

FIG. 9

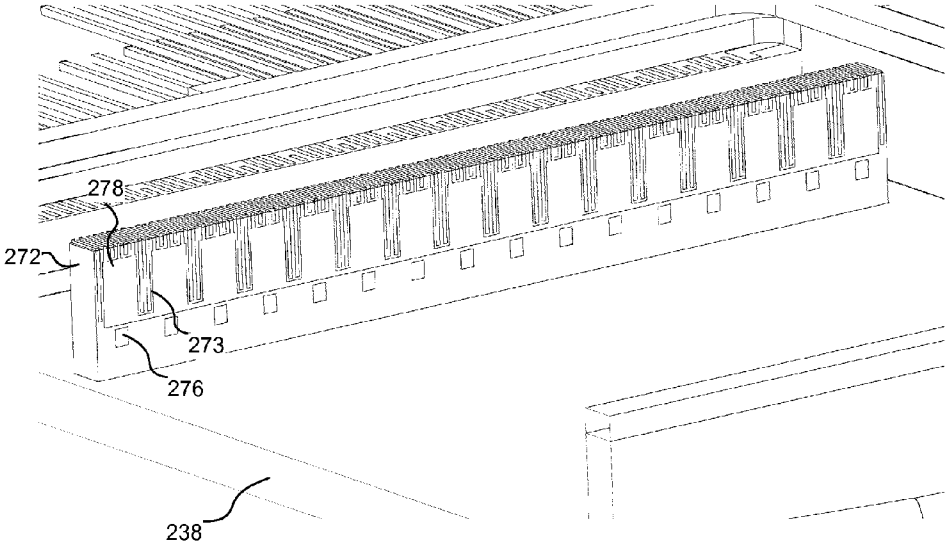

FIG. 10A

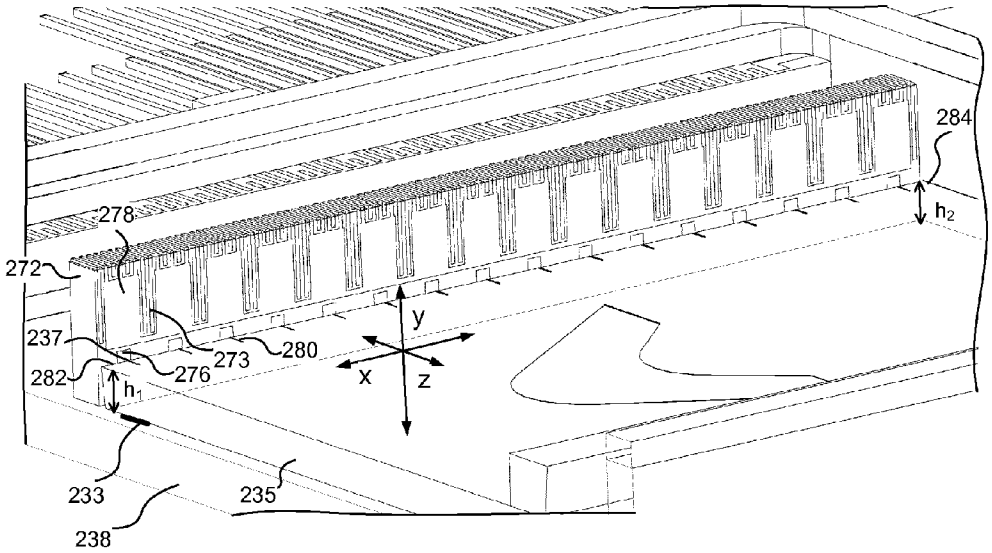

FIG. 10B

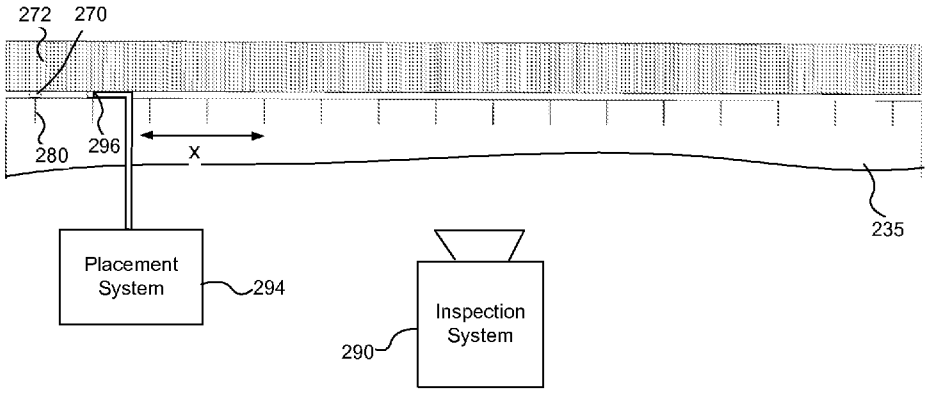

FIG. 10C

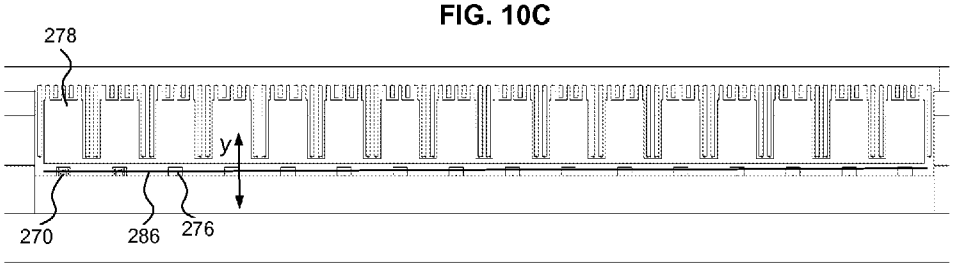

FIG. 10D

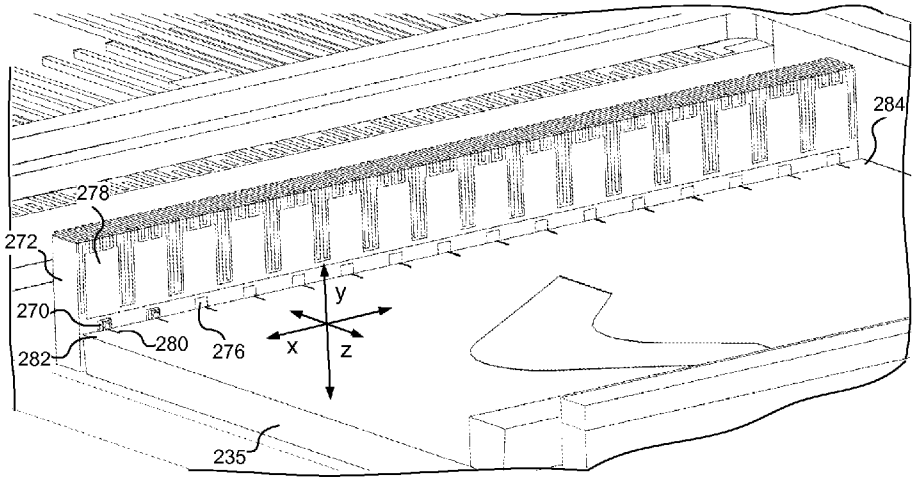

FIG. 10E

ALIGNING AND DIRECTLY OPTICALLY COUPLING PHOTODETECTORS TO OPTICAL DEMULTIPLEXER OUTPUTS IN A MULTICHANNEL RECEIVER OPTICAL SUBASSEMBLY

CROSS-REFERENCE TO RELATED APPLICATIONS

[0001] The present application is a continuation-in-part of U.S. patent application Ser. No. 13/893,802 filed May 14, 2013, which is fully incorporated herein by reference.

TECHNICAL FIELD

[0002] The present disclosure relates to optical transceivers and more particularly, to aligning and directly optically coupling photodetectors to optical demultiplexer outputs in a multi-channel receiver optical subassembly (ROSA).

BACKGROUND INFORMATION

[0003] Optical communications networks, at one time, were generally "point to point" type networks including a transmitter and a receiver connected by an optical fiber. Such networks are relatively easy to construct but deploy many fibers to connect multiple users. As the number of subscribers connected to the network increases and the fiber count increases rapidly, deploying and managing many fibers becomes complex and expensive.

[0004] A passive optical network (PON) addresses this problem by using a single "trunk" fiber from a transmitting end of the network, such as an optical line terminal (OLT), to a remote branching point, which may be up to 20 km or more. One challenge in developing such a PON is utilizing the capacity in the trunk fiber efficiently in order to transmit the maximum possible amount of information on the trunk fiber. Fiber optic communications networks may increase the amount of information carried on a single optical fiber by multiplexing different optical signals on different wavelengths using wavelength division multiplexing (WDM). In a WDM-PON, for example, the single trunk fiber carries optical signals at multiple channel wavelengths to and from the optical branching point and the branching point provides a simple routing function by directing signals of different wavelengths to and from individual subscribers. In this case, each subscriber may be assigned one or more of the channel wavelengths on which to send and/or receive data.

[0005] To transmit and receive optical signals over multiple channel wavelengths, the OLT in a WDM-PON may include a multi-channel transmitter optical subassembly (TOSA), a multi-channel receiver optical subassembly (ROSA), and associated circuitry. One challenge with such OLT transceiver modules is accommodating the multi-channel TOSA, ROSA and circuitry in the relatively small space available in an OLT module. Designing a subassembly, such as the ROSA, with a smaller size presents potential problems with optical coupling between optical components in the subassembly. Limitations on the power budget of multiple channel optical transceivers present an additional challenge because higher receiver sensitivity may be required but difficult to achieve given the limited space for optical and opto-electronic components.

[0006] In the ROSA, multiple photodiodes are optically coupled to multiple outputs from an optical demultiplexer, such as an arrayed waveguide grating (AWG), for receiving multiple optical signals over multiple channels. To provide the coupling efficiency needed for a desired receiver sensitivity, these optical couplings are often made using a fiber array and/or lenses. The limited space within a smaller sized ROSA housing, however, may not be sufficient to accommodate fiber arrays and lenses used for such optical couplings. Aligning the photodiodes with the optical demultiplexer outputs may also be difficult without using expensive active alignment techniques and equipment.

BRIEF DESCRIPTION OF THE DRAWINGS

[0007] These and other features and advantages will be better understood by reading the following detailed description, taken together with the drawings wherein:

[0008] FIG. **1** is a functional block diagram of a wavelength division multiplexed (WDM) passive optical network (PON) including at least one compact multi-channel optical transceiver, consistent with embodiments of the present disclosure.

[0009] FIG. **2** is an exploded view of a compact multi-channel optical transceiver including a multi-channel TOSA, ROSA and circuit board, consistent with an embodiment of the present disclosure.

[0010] FIG. **3** is a top view inside the compact multi-channel optical transceiver shown in FIG. **2**.

[0011] FIG. **4** is an exploded perspective view of a multi-channel ROSA for use in a compact multi-channel optical transceiver, consistent with an embodiment of the present disclosure.

[0012] FIG. **5** is a cross-sectional view of the multi-channel ROSA shown in FIG. **4**.

[0013] FIG. **6** is a cross-sectional front perspective view of the array of photodetectors directly optically coupled to the respective optical outputs of the optical demultiplexer in the ROSA shown in FIG. **4**.

[0014] FIG. **7** is an enlarged, side perspective view of the array of photodetectors directly optically coupled to the respective optical outputs of the optical demultiplexer in the ROSA shown in FIG. **4**.

[0015] FIG. **8** is an enlarged side view of a photodetector directly optically coupled to an optical output of an optical demultiplexer and wire bonded to an associated transimpedance amplifier (TIA).

[0016] FIG. **9** is an enlarged perspective view of photodetectors directly optically coupled to optical outputs of an optical demultiplexer and wire bonded to associated TIAs.

[0017] FIGS. **10A-10E** illustrate a method of passively aligning and directly optically coupling an array of photodetectors with respective optical outputs of an optical demultiplexer.

DETAILED DESCRIPTION

[0018] A multi-channel receiver optical subassembly (ROSA), consistent with embodiments described herein, includes an optical demultiplexer, such as an arrayed waveguide grating (AWG), with outputs directly optically coupled to respective photodetectors such as photodiodes. In one embodiment, an AWG may be configured such that optical components of the AWG do not interfere with direct optical coupling, and the wire bond points on the photodiodes may also be configured such that wire bonding does not interfere with direct optical coupling. The photodiodes may also be mounted on a photodetector mounting bar with a pitch

sufficiently spaced to allow connection to floating grounds. A passive alignment technique may be used to determine the mounting locations on the photodetector mounting bar such that the photodetectors are aligned with the optical outputs. A compact multi-channel optical transceiver may include the multi-channel ROSA, and the optical transceiver may be used in a wavelength division multiplexed (WDM) optical system, for example, in an optical line terminal (OLT) in a WDM passive optical network (PON).

[0019] As used herein, "channel wavelengths" refer to the wavelengths associated with optical channels and may include a specified wavelength band around a center wavelength. In one example, the channel wavelengths may be defined by an International Telecommunication (ITU) standard such as the ITU-T dense wavelength division multiplexing (DWDM) grid. The term "coupled" as used herein refers to any connection, coupling, link or the like and "optically coupled" refers to coupling such that light from one element is imparted to another element. The term "directly optically coupled" refers to an optical coupling without any intermediate optical components such as lenses or fiber arrays.

[0020] Referring to FIG. **1**, a WDM-PON **100** including one or more multi-channel optical transceivers **102***a*, **102***b*, consistent with embodiments of the present disclosure, is shown and described. The WDM-PON **100** provides a point-to-multipoint optical network architecture using a WDM system. According to one embodiment of the WDM-PON **100**, at least one optical line terminal (OLT) **110** may be coupled to a plurality of optical networking terminals (ONTs) or optical networking units (ONUs) **112-1** to **112-***n* via optical fibers, waveguides, and/or paths **114**, **115-1** to **115-***n*. Although the OLT **110** includes two multi-channel optical transceivers **102***a*, **102***b* in the illustrated embodiment, the OLT **110** may include one or more multi-channel optical transceivers.

[0021] The OLT **110** may be located at a central office of the WDM-PON **100**, and the ONUs **112-1** to **112-***n* may be located in homes, businesses or other types of subscriber location or premises. A branching point **113** (e.g., a remote node) couples a trunk optical path **114** to the separate optical paths **115-1** to **115-***n* to the ONUs **112-1** to **112-***n* at the respective subscriber locations. The branching point **113** may include one or more passive coupling devices such as a splitter or optical multiplexer/demultiplexer. In one example, the ONUs **112-1** to **112-***n* may be located about 20 km or less from the OLT **110**.

[0022] The WDM-PON **100** may also include additional nodes or network devices, such as Ethernet PON (EPON) or Gigabit PON (GPON) nodes or devices, coupled between the branching point **113** and ONUs **112-1** to **112-***n* at different locations or premises. One application of the WDM-PON **100** is to provide fiber-to-the-home (FTTH) or fiber-to-the-premises (FTTP) capable of delivering voice, data, and/or video services across a common platform. In this application, the central office may be coupled to one or more sources or networks providing the voice, data and/or video.

[0023] In the WDM-PON **100**, different ONUs **112-1** to **112-***n* may be assigned different channel wavelengths for transmitting and receiving optical signals. In one embodiment, the WDM-PON **100** may use different wavelength bands for transmission of downstream and upstream optical signals relative to the OLT **110** to avoid interference between the received signal and back reflected transmission signal on the same fiber. For example, the L-band (e.g., about 1565 to 1625 nm) may be used for downstream transmissions from the OLT **110** and the C-band (e.g., about 1530 to 1565 nm) may be used for upstream transmissions to the OLT **110**. The upstream and/or downstream channel wavelengths may generally correspond to the ITU grid. In one example, the upstream wavelengths may be aligned with the 100 GHz ITU grid and the downstream wavelengths may be slightly offset from the 100 GHz ITU grid.

[0024] The ONUs **112-1** to **112-***n* may thus be assigned different channel wavelengths within the L-band and within the C-band. Transceivers or receivers located within the ONUs **112-1** to **112-***n* may be configured to receive an optical signal on at least one channel wavelength in the L-band (e.g., $\lambda_{L1}, \lambda_{L2}, \ldots \lambda_{Ln}$). Transceivers or transmitters located within the ONUs **112-1** to **112-***n* may be configured to transmit an optical signal on at least one channel wavelength in the C-band (e.g., $\lambda_{C1}, \lambda_{C2}, \ldots \lambda_{Cn}$). Other wavelengths and wavelength bands are also within the scope of the system and method described herein.

[0025] The branching point **113** may demultiplex a downstream WDM optical signal (e.g., $\lambda_{L1}, \lambda_{L2}, \ldots \lambda_{Ln}$) from the OLT **110** for transmission of the separate channel wavelengths to the respective ONUs **112-1** to **112-***n*. Alternatively, the branching point **113** may provide the downstream WDM optical signal to each of the ONUs **112-1** to **112-***n* and each of the ONUs **112-1** to **112-***n* separates and processes the assigned optical channel wavelength. The individual optical signals may be encrypted to prevent eavesdropping on optical channels not assigned to a particular ONU. The branching point **113** also combines or multiplexes the upstream optical signals from the respective ONUs **112-1** to **112-***n* for transmission as an upstream WDM optical signal (e.g., $\lambda_{C1}, \lambda_{C2}, \ldots \lambda_{Cn}$) over the trunk optical path **114** to the OLT **110**.

[0026] One embodiment of the ONU **112-1** includes a laser **116**, such as a laser diode, for transmitting an optical signal at the assigned upstream channel wavelength (λ_{C1}) and a photodetector **118**, such as a photodiode, for receiving an optical signal at the assigned downstream channel wavelength (λ_{L1}). The laser **116** may include a tunable laser configured to be tuned to the assigned channel wavelength. This embodiment of the ONU **112-1** may also include a diplexer **117** coupled to the laser **116** and the photodetector **118** and a C+L band filter **119** coupled to the diplexer **117**, which allow the L-band channel wavelength (λ_{L1}) to be received by the ONU **112-1** and the C-band channel wavelength (λ_{C1}) to be transmitted by the ONU **112-1**.

[0027] The OLT **110** may be configured to generate multiple optical signals at different channel wavelengths (e.g., $\lambda_{L1}, \lambda_{L2}, \ldots \lambda_{Ln}$) and to combine the optical signals into the downstream WDM optical signal carried on the trunk optical fiber or path **114**. Each of the OLT multi-channel optical transceivers **102***a*, **102***b* may include a multi-channel transmitter optical subassembly (TOSA) **120** for generating and combining the optical signals at the multiple channel wavelengths. The OLT **110** may also be configured to separate optical signals at different channel wavelengths (e.g., $\lambda_{C1}, \lambda_{C2}, \ldots \lambda_{Cn}$) from an upstream WDM optical signal carried on the trunk path **114** and to receive the separated optical signals. Each of the OLT multi-channel optical transceivers **102***a*, **102***b* may thus include a multi-channel receiver optical subassembly (ROSA) **130** for separating and receiving the optical signals at multiple channel wavelengths. As will be described in greater detail below, the multi-channel TOSA **120** and ROSA **130** are configured and arranged to fit within

a relatively small transceiver housing and to facilitate heat transfer within the transceiver housing.

[0028] One embodiment of the multi-channel TOSA **120** includes an array of lasers **122**, such as laser diodes, which may be modulated by respective RF data signals (TX_D**1** to TX_Dm) to generate the respective optical signals. The lasers **122** may be modulated using various modulation techniques including external modulation and direct modulation. An optical multiplexer **124**, such as an arrayed waveguide grating (AWG), combines the optical signals at the different respective downstream channel wavelengths (e.g., λ_{L1}, λ_{L2}, . . . λ_{Lm}). The TOSA **120** may also include a temperature control system for controlling temperature of the lasers **122** and the multiplexer **124** to maintain a desired wavelength precision or accuracy.

[0029] In some embodiments, the lasers **122** may be tunable lasers that generate the optical signals at the respective channel wavelengths. In other embodiments, the lasers **122** may generate optical signals over a band of channel wavelengths and filtering and/or multiplexing techniques may be used to produce the assigned channel wavelengths. Examples of optical transmitters including a laser array and AWG are disclosed in greater detail in U.S. patent application Ser. No. 13/543,310 (U.S. patent application Pub. Ser. No. _____), U.S. patent application Ser. No. 13/357,130 (U.S. patent application Pub. Ser. No. _____), and U.S. patent application Ser. No. 13/595,505 (U.S. patent application Pub. Ser. No. _____), all of which are fully incorporated herein by reference. In the illustrated embodiment, the OLT **110** further includes a multiplexer **104** for multiplexing the multiplexed optical signal from the multi-channel TOSA **120** in the multi-channel transceiver **102***a* with a multiplexed optical signal from a multi-channel TOSA in the other multi-channel transceiver **102***b* to produce the downstream aggregate WDM optical signal.

[0030] One embodiment of the multi-channel ROSA **130** includes a demultiplexer **132** for separating the respective upstream channel wavelengths (e.g., λ_{C1}, λ_{C2}, . . . λ_{Cn}). An array of photodetectors **134**, such as photodiodes, detects the optical signals at the respective separated upstream channel wavelengths and provides the received data signals (RX_D**1** to RX_Dm). As described in greater detail below, the outputs of the demultiplexer **132** may be aligned with and directly optically coupled to the photodetectors **134** to provide a relatively high coupling efficiency. In the illustrated embodiment, the OLT **110** further includes a demultiplexer **106** for demultiplexing the upstream WDM optical signal into first and second WDM optical signals provided to the respective multi-channel ROSA in each of the transceivers **102***a*, **102***b*. The OLT **110** also includes a diplexer **108** between the trunk path **114** and the multiplexer **104** and the demultiplexer **106** such that the trunk path **114** carries both the upstream and the downstream channel wavelengths. The transceivers **102***a*, **102***b* may also include other components, such as laser drivers, transimpedance amplifiers (TIAs), and control interfaces, used for transmitting and receiving optical signals.

[0031] In one example, each of the multi-channel optical transceivers **102***a*, **102***b* may be configured to transmit and receive 16 channels such that the WDM-PON **100** supports 32 downstream L-band channel wavelengths and 32 upstream C-band channel wavelengths. In one example, the downstream L-band link between the OLT transceivers **102***a*, **102***b* and the ONUs **112-1** to **112-***n* may support a power budget of at least about 26 dB and the upstream C-band link between the ONUs **112-1** to **112-***n* and the OLT transceivers **102***a*, **102***b* may support a power budget of at least about 23 dB. One example of the WDM-PON **100** may operate at 1.25 Gbaud using 8B/10B encoded on-off keying as the modulation scheme. Other data rates and modulation schemes may also be used.

[0032] As mentioned above, the upstream and downstream channel wavelengths may span a range of channel wavelengths on the 100 GHz ITU grid. Each of the transceivers **102***a*, **102***b*, for example, may cover 16 channel wavelengths in the L-band for the TOSA and 16 channel wavelengths in the C-band for the ROSA such that the transceivers **102***a*, **102***b* together cover 32 channels. Thus, the multiplexer **104** may combine 16 channels from one transceiver **102***a* with 16 channels from the other transceiver **102***b*, and the demultiplexer **106** may separate a 32 channel WDM optical signal into two 16 channel WDM optical signals. To facilitate use of the multiplexer **104** and the demultiplexer **106**, the range of channel wavelengths may skip channels (e.g., 2 channels) in the middle of the range. According to one example of a multi-channel optical transceiver used in the WDM-PON **100**, the desired wavelength precision or accuracy is ±0.05 nm, the desired operating temperature is between −5 and 70° C., and the desired power dissipation is about 16.0 W.

[0033] Referring to FIGS. **2** and **3**, one embodiment of a compact multi-channel optical transceiver module **202** is shown and described in greater detail. As discussed above, multiple multi-channel transceiver modules may be used in an OLT of a WDM-PON to cover a desired channel range. The transceiver module **202** may thus be designed to have a relatively small form factor with minimal space. The compact optical transceiver module **202** generally provides an optical input and output at an optical connection end **204** and electrical input and output at an electrical connection end **206**. The transceiver module **202** includes a transceiver housing **210***a*, **210***b* enclosing a multi-channel TOSA **220**, a multi-channel ROSA **230**, a circuit board **240**, and a dual fiber adapter **250** directly linked to the TOSA **220** and the ROSA **230** for providing the optical input and output. The transceiver housing **210***a*, **210***b* may have a width of less than about 55 mm, a length of less than about 130 mm, and a height of less than about 10 mm. More specifically, one example of a transceiver housing **210** may have a width of 54.6 mm, a length of 110 mm, and a height of about 9.8 mm.

[0034] In the example embodiment, the TOSA **220** is located in the transceiver housing **210***a*, **210***b* proximate the optical connection end **204** and the ROSA **230** is located in the transceiver housing **210***a*, **210***b* proximate the electrical connection end **206**. The circuit board **240** is located proximate the transceiver housing bottom portion **210***a* and extends to the electrical connection end **206**. The ROSA **230** is located between the circuit board **240** and the transceiver housing top portion **210***b*. As will be described in greater detail below, the ROSA **230** may be spaced from the circuit board **240** to provide space for circuit board components and may be inverted and positioned proximate the transceiver housing top portion **210***b* to facilitate heat transfer from the ROSA **230** to the housing top portion **210***b*.

[0035] The TOSA **220** and the ROSA **230** each have an optical connection end **221**, **231** directed toward the transceiver optical connection end **204** and an electrical connection end **223**, **233** directed toward the transceiver electrical connection end **206**. The optical connection ends **221**, **231** of the TOSA **220** and the ROSA **230** are optically coupled to the

dual fiber adapter **250** with respective optical fibers **222**, **232**, respectively, to provide a direct link between the adapter **250** and both the TOSA **220** and the ROSA **230**. The electrical connection ends **223**, **233** of the TOSA **220** and the ROSA **230** are electrically connected to the circuit board **240** using TOSA pins **224** and ROSA pins **234**, respectively, soldered to conductive pads on the circuit board **240**. The circuit board **240** includes input/output conductive pads **242** proximate the transceiver electrical connection end **206**. Input conductive pads **242** may be provided on one side of the circuit board **240** for providing RF input to the TOSA **220** and output conductive pads **242** may be provided on the other side of the circuit board **240** for providing output from the ROSA **230**.

[0036] The dual fiber adapter **250** is also configured to receive pluggable optical connectors, such as LC connectors (not shown), to connect the TOSA **220** and ROSA **230**, respectively, to fiber optic cables (not shown). When the pluggable optical connectors are plugged into the dual fiber adapter **250**, the adapter **250** establishes an optical coupling between the TOSA **220** and the ROSA **230** and the respective optical fibers in the fiber-optic cables, which carry the optical signals to and from the transceiver.

[0037] The multi-channel TOSA **220** includes an array of lasers (not shown in FIGS. **2** and **3**) coupled to a multiplexer **225** such as an AWG. A temperature control system may be used to control the temperature of the individual lasers to provide a desired wavelength with a desired wavelength precision or accuracy. In one example, the temperature of each laser is maintained within ±0.5° C. in the operating range between −5 and 70° C. to maintain a wavelength precision or accuracy of about ±0.05 nm. The temperature control system may include a thermoelectric cooler (TEC), and the multiplexer **225** and/or the lasers may be mounted on the TEC in a bottom region of the TOSA **220**. Examples of the TOSA are described in greater detail in U.S. patent application Ser. No. 13/708,064 (U.S. patent application Pub. Ser. No. _____) and U.S. patent application Ser. No. 13/708,569 (U.S. patent application Pub. Ser. No. _____), which are fully incorporated herein by reference.

[0038] Although the illustrated embodiment shows the TOSA **220** with the bottom region facing the transceiver housing bottom portion **210***a*, the TOSA **220** may also be inverted and the bottom of the TOSA **220** may be thermally coupled to (e.g., touching) the transceiver housing top portion **210***b*. The transceiver module **202** may be mounted in a cage assembly with the transceiver housing top portion **210***b* being located proximate a heat sink at the top of the cage. Because the TOSA **220** generates most of the heat from the bottom portion (e.g., from the TEC), the upside down or inverted configuration may provide better thermal dissipation and improve the overall working temperature range of the transceiver module **202**.

[0039] The multi-channel ROSA **230** includes a demultiplexer, such as an AWG, coupled to an array of photodetectors, such as photodiodes, as will be described in greater detail below. The printed circuit board **240** may include circuitry and electronic components such as laser diode drivers, transimpedance amplifiers (TIAs), control interfaces, and temperature control circuitry. In the example embodiment, the circuit board **240** includes integrated circuit (IC) components **244** electrically connected to the TOSA **220** and the ROSA **230**, for example, using conductive traces on or in the circuit board **240**. The IC components **244** are mounted on at least one side of the circuit board **240** between the circuit board **240** and the ROSA **230** and may also be mounted on the opposite side of the circuit board **240**. The IC components **244** may be arranged on the circuit board **240** in one or more rows of IC components **244**.

[0040] In one embodiment, the IC components are combination IC components including a laser diode driver and a photodiode limiting amplifier. Each laser diode driver is electrically connected to a respective laser diode on the TOSA **220** and each photodiode limiting amplifier is electrically connected to a respective photodiode on the ROSA **230**. In the example embodiment of a sixteen (16) channel transceiver, for example, the circuit board **240** may include 16 combination IC components **244**. The 16 combination IC components may be arranged in two rows of four IC components **244** on each side of the circuit board **240**.

[0041] In the example embodiment, ROSA supports **260** hold and support the ROSA **230** on each side of the ROSA **230**. The ROSA supports **260** are mounted to the transceiver housing bottom portion **210***a* such that the ROSA **230** is spaced from the circuit board **240**. The illustrated embodiment of the ROSA supports **260** have an L-shaped portion such that the ROSA supports **260** extend from sides of the transceiver housing bottom portion **210***a* and support the ROSA **230** without interfering with the circuit board **240** or any components thereon.

[0042] Referring to FIGS. **4** and **5**, an embodiment of the multi-channel ROSA **230** is described in greater detail. The ROSA **230** includes a demultiplexer **235**, such as an AWG, mounted on a ROSA base portion **238**. Optical outputs **237** of the demultiplexer **235** are optically coupled to an array of photodetectors **236**, such as photodiodes. An input of the demultiplexer **235** is optically coupled to the input optical fiber **232** at the optical connection end **231** and the output of the photodetectors **236** are electrically connected to the ROSA pins **234** at the electrical connection end **233**. A ROSA cover **239** covers the ROSA base portion **238** and encloses the demultiplexer **235** and array of photodetectors **236**.

[0043] As shown in FIGS. **4** and **5**, optical outputs **237** of the demultiplexer **235** are directly optically coupled to the respective photodetectors **236** without any intermediate optical components such as lenses or fibers. Where the demultiplexer **235** is an AWG, for example, the light exits the waveguides of the AWG and enters the photodetectors **236** without passing through any medium other than air. As such, the AWG may be designed and configured without components (e.g., a glass rail) used to couple the AWG to a fiber array, which allows the direct optical coupling. The waveguides in the AWG may be modified to account for any optical changes resulting from the removal of any such components, such as changes in the index of refraction or other changes in the light path.

[0044] Referring to FIGS. **6-9**, direct optical coupling of the array of photodetectors **236** to the respective optical outputs **237** of the optical demultiplexer **235** is shown and described in greater detail. In the illustrated embodiment, the array of photodetectors **236** include PIN type photodiodes **270** mounted on a photodetector mounting bar **272** together with associated transimpedance amplifiers (TIAs) **274**. The photodiodes **270** are aligned with and spaced from the optical outputs **237** of the demultiplexer **235** with a spacing that is close enough to achieve a coupling efficiency of 95% or greater with an alignment tolerance (i.e., in the X, Y axes) high enough to allow passive alignment (e.g., an alignment tolerance of at least about 20 microns). In one example, the

photodiodes **270** may be spaced from the optical outputs **237** (i.e., in the Z axis) in a range of 10-40 microns, which allows a coupling efficiency greater than 95% and an alignment tolerance of about 20 microns. In the illustrated embodiment of a 16 channel ROSA, for example, 16 photodiodes **270** are aligned with 16 optical outputs **237** and electrically connected to 16 associated TIAs **274**, respectively.

[0045] As shown in FIGS. **8** and **9**, each of the photodiodes **270** is electrically connected to each of the TIAs **274** using wire bonding. Wires **271** extend from wire bonding points on the photodiodes **270** to wire bonding points on the associated TIAs **274**. Wires **271** also extend between the photodiodes **270** and/or TIAs **274** and conductive paths or pads on the mounting bar **272**, for example, to ground paths **273**. Although one embodiment includes nine (9) wires **271** between each photodiode/TIA pair, as shown in FIG. **9**, other numbers of wires may also be used. The photodiodes **270** are designed and configured with wire bonding points arranged in a pattern (e.g., using a cross over design) such that the wires **271** do not interfere with the optical demultiplexer **235**, thereby allowing the direct optical coupling with sufficient proximity to achieve the desired coupling efficiency (e.g., 95% or greater) and with a tolerance alignment high enough to allow passive alignment (e.g., at least 20 microns). In other words, the wire bonding points are arranged on the region of each of the photodiodes **270** that does not oppose the demultiplexer **235** when directly optically coupled. Where the optical multiplexer **235** is about 0.7 mm thick, for example, the wire bond points may be located on a region of the mounted photodiode **270** that extends above 0.8 mm measured from the ROSA housing bottom portion **238**. Designing and configuring an AWG without a glass rail for connecting to a fiber array, as discussed above, also prevents interference with the wire bonding and allows the close proximity of the photodiodes **270** to the respective optical outputs **237**.

[0046] The photodiodes **270** may also be spaced sufficiently on the mounting bar **272** (i.e., in the X axis) to allow each of the photodiodes **270** to be connected to a floating ground. Connecting the photodiodes **270** to a floating ground instead of a common ground may prevent loss of receiver sensitivity. The floating grounds may include the ground paths **273** on the mounting bar **272** between the TIAs **274**. Thus, the TIAs **274** are spaced on the mounting bar **272** sufficiently to allow space for the ground paths **273** between the TIAs **274**, and the photodiodes **270** associated with each of the TIAs **274** are mounted with a pitch p corresponding to the pitch p of the TIAs **274**. In one example, where the TIAs **274** are each about 1 mm wide, the TIAs **274** and the photodiodes **270** have a pitch p on the mounting bar **272** greater than 1 mm and more specifically about 1.375 mm. In one embodiment, the optical demultiplexer **235** may be an AWG designed with the optical outputs **237** having a pitch p matching that of the photodiodes **270** when mounted on the mounting bar **272**.

[0047] Referring to FIGS. **10**A-**10**E, a passive alignment method is described in greater detail. Passive alignment generally refers to alignment without actively directing light into a photodiode and monitoring the photodiode output. This passive alignment method may be used to align each of the photodiodes **270** (e.g., in the X and Y axis) with each of the respective optical outputs **237** of the optical demultiplexer **235** to provide the desired coupling efficiency. Although a passive alignment method is described herein, active alignment methods may also be used to provide alignment of the photodetectors in the ROSA described above.

[0048] The photodetector mounting bar **272** is mounted to the ROSA bottom portion **238** without the photodiodes and TIAs, as shown in FIG. **10**A. The mounting bar **272** may be mounted using an adhesive, such as epoxy, or other suitable techniques. The mounting bar **272** includes photodiode conductive pads **276** and TIA conductive pads **278** with a pitch p corresponding to the desired pitch of the mounted photodiodes and TIAs. The ground paths **273** are located on the mounting bar **272** between the TIA conductive pads **278**.

[0049] The optical demultiplexer **235** (e.g., the AWG) is also mounted to the ROSA bottom portion **238**, as shown in FIG. **10**B. Although the illustrated embodiment shows the mounting bar **272** being mounted before the optical demultiplexer **235**, the demultiplexer **235** may also be mounted before the mounting bar **272**. In either case, the mounting bar **272** (i.e., without the photodiodes and TIAs) and the demultiplexer **235** are mounted with a spacing (e.g., along the Z axis) that is sufficient to accommodate the photodiodes with the desired close proximity spacing (e.g., 10-40 microns) for direct optical coupling with the desired coupling efficiency. The demultiplexer **235** includes alignment markings **280** that mark the locations of the optical outputs **237** of the optical demultiplexer **235** along the X axis. The mounting bar **272** and the optical demultiplexer **235** are mounted to the ROSA housing base portion **238** such that the alignment markings **280** align with respective photodiode conductive pads **276** on the mounting bar **272**.

[0050] The optical demultiplexer **235** is mounted to the ROSA housing base portion **235** using an adhesive **233**, such as an epoxy. Because the adhesive **233** may have different thicknesses at different sides **282**, **284** of the optical demultiplexer **235**, the position of the optical outputs **237** in the Y axis may vary relative to the ROSA housing base portion **238**. To account for this variation, distances h_1, h_2 are measured at each side **282**, **284** of the optical demultiplexer **235** from the ROSA housing base portion **238** to a location on the optical demultiplexer **235** (e.g., the top of an AWG chip). These distances may then be used to provide passive alignment of the photodiodes **270** with the optical outputs **237** in the Y axis as disclosed in greater detail below.

[0051] After the mounting bar **272** and the optical demultiplexer **235** have been mounted to the ROSA housing base portion **238**, each of the photodiodes **270** may be positioned between the mounting bar **272** and the optical demultiplexer **235** and aligned in the X and Y axes at each of the respective locations as shown in FIGS. **10**C-**10**E. Each aligned photodiode **270** may be mounted to the photodiode conductive pad **276**, for example, using a conductive epoxy applied to the conductive pad **276** and/or to the photodiode **270** prior to positioning and aligning the photodiode **270**. Conductive epoxy, such as silver epoxy, allows cathodes of the photodiodes to be electrically connected to the respective photodiode conductive pads **276**.

[0052] To provide the passive alignment in the illustrated embodiment, an inspection system **290** is positioned for imaging the photodetector mounting bar **272**. The inspection system **290** may include a microscope and inspection projector such as the type known for use in inspecting small areas for opto-electronic assembly. The inspection system **290** generates an alignment line **286** based on the measured distances h_1, h_2 at the respective sides **282**, **284** of the optical demultiplexer **235** and projects or displays the alignment line **286** on

the mounting bar **272** for use in aligning the photodiodes in the Y axis (see FIG. **10**D). The alignment line **286** corresponds to the variation in position of the optical outputs **237** in the Y axis relative to the ROSA housing base portion **238**.

[0053] The alignment line **286** may be formed between two points determined from the measured distances h_1, h_2. For an AWG having a thickness of 0.7 mm, for example, if the measured distances h_1, h_2 are 0.78 mm and 0.795 mm, respectively, the alignment line **286** will have a variance of 15 microns between the ends (e.g., at the positions of the photodiode **1** and photodiode **16**). Because the optical outputs **237** are aligned linearly from the first side **282** to the second side **284** of the demultiplexer **235**, the alignment line **286** generated from the distances h_1, h_2 measured at each of the sides **282**, **284** may be used to align all of the photodiodes **270** in the Y axis without having to measure the distances at each of the locations of the optical outputs **237**.

[0054] While viewing the mounting bar **272** with the inspection system **290**, the individual photodiodes **270** may be positioned, aligned and mounted. Each of the photodiodes **270** may be aligned in the X axis using the alignment markings **280** and may be aligned in the Y axis using the alignment line **286**. According to one method, the photodiodes **270** may be manually positioned (e.g., using tweezers). According to another method, a placement system **294** may be used to automatically position each photodiode **270** to the aligned location. The placement system **294** may include automated machines known for use in holding and positioning small optical or opto-electronic components. One example of a placement system **294** includes a vacuum tip **296** capable of holding the photodiode **270**.

[0055] After all of the photodiodes **270** have been aligned and mounted, the TIAs (not shown in FIGS. **10**A-**10**E) may be mounted to the TIA conductive pads **278**, for example, using a silver epoxy or other conductive epoxy. The photodiodes, TIAs and conductive paths may then be wire bonded to provide the electrical connections.

[0056] Accordingly, the multi-channel optical transceiver module, consistent with embodiments described herein, provides a direct optical coupling between an array of photodetectors and a plurality of optical outputs of an optical demultiplexer in a relatively small space and with a relatively high coupling efficiency. A passive alignment method may also be used to align the photodetectors with the optical outputs of the optical demultiplexer with the relatively high coupling efficiency.

[0057] Consistent with an embodiment, a multi-channel receiver optical subassembly (ROSA) includes a ROSA housing and an optical demultiplexer located in the ROSA housing. The optical demultiplexer includes multiple optical outputs corresponding to multiple channels and is configured to receive a wavelength division multiplexed (WDM) optical signal on multiple channel wavelengths and to demultiplex the WDM optical signal to produce demultiplexed optical signals on the multiple channel wavelengths, respectively. The multi-channel ROSA also includes an array of photodetectors located in the ROSA housing and aligned with and directly optically coupled to the multiple optical outputs, respectively, of the optical demultiplexer.

[0058] Consistent with another embodiment, a multi-channel optical transceiver module includes a transceiver housing having a transceiver optical connection end and a transceiver electrical connection end. The transceiver optical connection end of the transceiver housing is configured to provide an optical connection and the transceiver electrical connection end of the transceiver housing being configured to provide an electrical connection. The multi-channel optical transceiver module also includes a circuit board located in the transceiver housing proximate the transceiver housing bottom portion. The circuit board includes RF inputs located proximate the transceiver electrical connection end of the transceiver housing. The multi-channel optical transceiver module further includes a multi-channel transmitter optical subassembly (TOSA) located in the transceiver housing and electrically connected to the circuit board. The TOSA is configured to transmit a wavelength division multiplexed (WDM) optical signal on multiple channel wavelengths. The multi-channel optical transceiver module also includes a multi-channel receiver optical subassembly (ROSA) located in the transceiver housing and electrically connected to the circuit board. The ROSA is configured to receive a wavelength division multiplexed (WDM) optical signal on multiple channel wavelengths. The ROSA includes an optical demultiplexer including multiple optical outputs corresponding to multiple channels. The optical demultiplexer is configured to receive a wavelength division multiplexed (WDM) optical signal on multiple channel wavelengths and to demultiplex the WDM optical signal to produce demultiplexed optical signals on the multiple channel wavelengths, respectively. The ROSA also includes an array of photodetectors aligned with and directly optically coupled to the multiple optical outputs, respectively, of the optical demultiplexer.

[0059] Consistent with a further embodiment, a method is provided for aligning photodetectors to optical outputs of an optical demultiplexer in a multi-channel receiver optical subassembly (ROSA). The method includes: mounting an optical demultiplexer on a ROSA housing base portion, wherein the optical demultiplexer includes alignment markings indicating locations of optical outputs of the optical demultiplexer along a first axis, wherein the optical demultiplexer is spaced from a photodetector mounting bar; measuring at least first and second distances from the ROSA housing base portion to the optical demultiplexer at respective first and second sides of the optical demultiplexer; displaying an alignment line on the photodetector mounting bar for indicating a photodetector position along a second axis, the alignment line extending between first and second points on the photodetector mounting bar corresponding to the first and second distances measured at the first and second sides of the optical demultiplexer; and mounting photodetectors on the photodector mounting bar, wherein each of the photodectors is aligned along the first axis with the one of the alignment markings and aligned along the second axis with the alignment line such that the photodectors are passively aligned with respective ones of the optical outputs of the optical demultiplexer.

[0060] While the principles of the invention have been described herein, it is to be understood by those skilled in the art that this description is made only by way of example and not as a limitation as to the scope of the invention. Other embodiments are contemplated within the scope of the present invention in addition to the exemplary embodiments shown and described herein. Modifications and substitutions by one of ordinary skill in the art are considered to be within the scope of the present invention, which is not to be limited except by the following claims.

What is claimed is:

1. A multi-channel receiver optical subassembly (ROSA) comprising:

a ROSA housing;

an optical demultiplexer located in the ROSA housing, the optical demultiplexer including multiple optical outputs corresponding to multiple channels, the optical demultiplexer being configured to receive a wavelength division multiplexed (WDM) optical signal on multiple channel wavelengths and to demultiplex the WDM optical signal to produce demultiplexed optical signals on the multiple channel wavelengths, respectively; and

an array of photodetectors located in the ROSA housing, the array of photodetectors aligned with and directly optically coupled to the multiple optical outputs, respectively, of the optical demultiplexer.

2. The multi-channel ROSA of claim **1** wherein the optical demultiplexer includes an arrayed waveguide grating (AWG).

3. The multi-channel ROSA of claim **1** wherein the array of photodetectors are mounted on a photodetector mounting bar.

4. The multi-channel ROSA of claim **3** wherein the array of photodetectors includes a plurality of PIN photodiodes and a plurality of transimpedance amplifiers (TIAs) mounted on the photodetector mounting bar, the PIN photodiodes being electrically connected to respective ones of the TIAs.

5. The multi-channel ROSA of claim **4** wherein the PIN photodiodes are wire bonded to the respective ones of the TIAs, and wherein wire bonding points on the PIN photodiodes are arranged to avoid interfering with the AWG.

6. The multi-channel ROSA of claim **1** wherein the optical outputs are spaced from the photodetectors by a distance of 10-40 microns.

7. The multi-channel ROSA of claim **1** wherein the array of photodetectors has a pitch of at least 1 mm.

8. The multi-channel ROSA of claim **1** wherein each of the photodetectors are electrically connected to a floating ground.

9. The multi-channel ROSA of claim **1** wherein the optical demultiplexer includes sixteen (16) optical outputs corresponding to sixteen (16) channels.

10. The multi-channel ROSA of claim **1** wherein the photodetectors are directly optically coupled with the optical outputs with a coupling efficiency of 95% or higher.

11. The multi-channel ROSA of claim **10** wherein the photodetectors are spaced sufficiently close to the optical outputs to provide an alignment tolerance of at least 20 microns.

12. The multi-channel ROSA of claim **1** wherein the optical demultiplexer includes an arrayed waveguide grating (AWG), wherein the array of photodetectors includes a plurality of PIN photodiodes and a plurality of transimpedance amplifiers (TIAs) mounted on a photodetector mounting bar, the PIN photodiodes being electrically connected to respective ones of the TIAs, wherein the optical outputs of the AWG are spaced from the PIN photodiodes by a distance of 10-40 microns, and wherein the array of photodetectors has a pitch of at least 1 mm.

13. A multi-channel optical transceiver module comprising:

a transceiver housing having a transceiver optical connection end and a transceiver electrical connection end, the transceiver optical connection end of the transceiver housing being configured to provide an optical connection and the transceiver electrical connection end of the transceiver housing being configured to provide an electrical connection;

a circuit board located in the transceiver housing proximate the transceiver housing bottom portion, wherein the circuit board includes RF inputs located proximate the transceiver electrical connection end of the transceiver housing;

a multi-channel transmitter optical subassembly (TOSA) located in the transceiver housing and electrically connected to the circuit board, the TOSA being configured to transmit a wavelength division multiplexed (WDM) optical signal on multiple channel wavelengths; and

a multi-channel receiver optical subassembly (ROSA) located in the transceiver housing and electrically connected to the circuit board, the ROSA being configured to receive a wavelength division multiplexed (WDM) optical signal on multiple channel wavelengths, wherein the ROSA comprises:

an optical demultiplexer including multiple optical outputs corresponding to multiple channels, the optical demultiplexer being configured to receive a wavelength division multiplexed (WDM) optical signal on multiple channel wavelengths and to demultiplex the WDM optical signal to produce demultiplexed optical signals on the multiple channel wavelengths, respectively; and

an array of photodetectors aligned with and directly optically coupled to the multiple optical outputs, respectively, of the optical demultiplexer.

14. The multi-channel optical transceiver module of claim **13** wherein the optical demultiplexer includes an arrayed waveguide grating (AWG).

15. The multi-channel optical transceiver module of claim **13** wherein the array of photodetectors are mounted on a photodetector mounting bar.

16. The multi-channel optical transceiver module of claim **15** wherein the array of photodetectors includes a plurality of PIN photodiodes and a plurality of transimpedance amplifiers (TIAs) mounted on the photodetector mounting bar, the PIN photodiodes being electrically connected to respective ones of the TIAs.

17. The multi-channel optical transceiver module of claim **16** wherein the PIN photodiodes are wire bonded to the respective ones of the TIAs, and wherein wire bonding points on the PIN photodiodes are arranged to avoid interfering with the AWG.

18. The multi-channel optical transceiver module of claim **13** wherein the optical outputs are spaced from the photodetectors by a distance of 10-40 microns.

19. The multi-channel optical transceiver module of claim **13** wherein the photodetectors are directly optically coupled with the optical outputs with a coupling efficiency of 95% or higher, and wherein the photodetectors are spaced sufficiently close to the optical outputs to provide an alignment tolerance of at least 20 microns.

20. A method of aligning photodetectors to optical outputs of an optical demultiplexer in a multi-channel receiver optical subassembly (ROSA), the method comprising:

mounting an optical demultiplexer on a ROSA housing base portion, wherein the optical demultiplexer includes alignment markings indicating locations of optical outputs of the optical demultiplexer along a first axis, wherein the optical demultiplexer is spaced from a photodetector mounting bar;

measuring at least first and second distances from the ROSA housing base portion to the optical demultiplexer at respective first and second sides of the optical demultiplexer;

displaying an alignment line on the photodetector mounting bar for indicating a photodetector position along a second axis, the alignment line extending between first and second points on the photodetector mounting bar corresponding to the first and second distances measured at the first and second sides of the optical demultiplexer; and

mounting photodetectors on the photodector mounting bar, wherein each of the photodectors is aligned along the first axis with the one of the alignment markings and aligned along the second axis with the alignment line such that the photodectors are passively aligned with respective ones of the optical outputs of the optical demultiplexer.

21. The method of claim **20** wherein the photodetectors are spaced from the optical outputs by a distance of 10-40 microns.

22. The method of claim **20** wherein the optical outputs of the optical demultiplexer have a pitch of at least 1 mm.

23. The method of claim **20** further comprising manually positioning the photodetectors to aligned the photodetectors along the first axis and the second axis.

24. The method of claim **20** further comprising automatically positioning the photodetectors to aligned the photodetectors along the first axis and the second axis.

25. The method of claim **20** further comprising mounting the photodetector mounting bar to the ROSA housing base portion, wherein the mounting bar and the optical demultiplexer are spaced sufficiently to accommodate the photodetectors.

26. The method of claim **20** wherein the optical demultiplexer is mounted to the ROSA housing base portion using epoxy.

27. The method of claim **20** wherein the photodetectors are PIN type photodiodes, further comprising:

mounting transimpedance amplifiers (TIAs) on the mounting bar adjacent to the photodiodes, respectively; and

wire bonding the photodiodes to the TIAs, respectively.

* * * * *