UNITED STATES PATENT AND TRADEMARK OFFICE

BEFORE THE PATENT TRIAL AND APPEAL BOARD

ACCELIGHT TECHNOLOGIES, INC.,
Petitioner,

v.

APPLIED OPTOELECTRONICS, INC,
Patent Owner.

IPR2025-01566
U.S. Patent No. 10,042,116

DECLARATION OF MICHAEL LEBBY, PH.D. IN SUPPORT OF *INTER PARTES* REVIEW OF U.S. PATENT NO. 10,042,116

TABLE OF CONTENTS

I. INTRODUCTION 1

II. QUALIFICATION AND EXPERIENCE 2

A. My Qualifications 2

B. My Education 2

C. My Professional Experience 3

D. My Relevant Experience in the Field of Art 3

III. LEGAL STANDARDS 12

A. Claim Construction 12

B. Anticipation 12

C. Obviousness 13

IV. DEFINITION OF A PERSON OF ORDINARY SKILL IN THE ART 15

V. RELEVANT TECHNICAL BACKGROUND AND OVERVIEW OF THE ’116 PATENT 16

VI. CLAIM CONSTRUCTION 20

A. “Substrate” 21

VII. OVERVIEW OF THE PRIOR ART 23

A. Lee (Ex. 1004) 23

B. Kim (Ex. 1005) 25

C. Ho (Ex. 1006) 29

D. Bernasconi (Ex. 1007) 32

E. Soldano (Ex. 1008) 34

F. Yoshikawa (Ex. 1009) 37

VIII. LEE-BASED GROUNDS 40

A. [Ground 1] Claims 1-4, 10, and 11 are Rendered Obvious by Lee in View of Kim 40

1. Independent claim 1 40

2. Claim 2 ("The AWG chip of claim 1, wherein the exposed output interface region is configured to pass the reflected light received via the plurality of output waveguides out of the AWG chip along a second light path that is substantially orthogonal to the first light path.") 55

3. Claim 3 ("The AWG chip of claim 1, wherein the AWG chip defines a plurality of sidewalls extending longitudinally from the first end to the second end, and wherein the tapered region of the second end defines an angled surface that extends from a first sidewall of the plurality of sidewalls to a second sidewall of the plurality of sidewalls.") 57

4. Claim 4 ("The AWG chip of claim 3, wherein the angled surface has an interior angle of about 41 to 45 degrees relative to the exposed output interface region.") 59

5. Claim 10 ("The AWG chip of claim 1, wherein the AWG chip is configured as a 1×N demultiplexer device whereby a single optical input signal is de-multiplexed into N different channel wavelengths.") 60

6. Claim 11 ("The AWG chip of claim 1, wherein the AWG chip is implemented in an AWG device package.") 61

B. [Ground 2] Claims 12, 13, 15, and 16 are Rendered Obvious by Ho in View of Lee and Kim and Further in View of Yoshikawa 62

1. Independent Claim 12 62

2. Claim 13 ("The optical transceiver module of claim 12, wherein the output interface region of the AWG chip is an exposed region adjacent an air gap, and wherein the air gap separates the output interface region of the AWG chip and the array of detector devices.") 76

3. Claim 15 ("The optical transceiver module of claim 12, wherein the AWG chip defines a plurality of sidewalls extending longitudinally from the first end to the second end, and wherein the tapered region of the second end defines an angled surface that extends from a first sidewall of the plurality of sidewalls to a second sidewall of the plurality of sidewalls.") 77

4. Claim 16 ("The optical transceiver module of claim 15, wherein the angled surface has an interior angle of about 41 to 45 degrees relative to the output interface region.") 78

IX. BERNASCONI-BASED GROUNDS.....79

A. [Ground 3] Claims 1-4, 10, and 11 are Rendered Obvious by Bernasconi in View of Soldano.....79

1. Independent Claim 1 79

2. Claim 2 ("The AWG chip of claim 1, wherein the exposed output interface region is configured to pass the reflected light received via the plurality of output waveguides out of the AWG chip along a second light path that is substantially orthogonal to the first light path.").....91

3. Claim 3 ("The AWG chip of claim 1, wherein the AWG chip defines a plurality of sidewalls extending longitudinally from the first end to the second end, and wherein the tapered region of the second end defines an angled surface that extends from a first sidewall of the plurality of sidewalls to a second sidewall of the plurality of sidewalls.") 92

4. Claim 4 ("The AWG chip of claim 3, wherein the angled surface has an interior angle of about 41 to 45 degrees relative to the exposed output interface region.")....93

5. Claim 10 ("The AWG chip of claim 1, wherein the AWG chip is configured as a 1×N demultiplexer device whereby a single optical input signal is de-multiplexed into N different channel wavelengths.")....96

6. Claim 11 ("The AWG chip of claim 1, wherein the AWG chip is implemented in an AWG device package.")....97

B. [Ground 4] The Group 2 Challenged Claims Are Rendered Obvious by Ho in View of Bernasconi and Soldano and Further in View of Yoshikawa....98

1. Independent Claim 12....98

2. Claim 13 ("The optical transceiver module of claim 12, wherein the output interface region of the AWG chip is an exposed region adjacent an air gap, and wherein the air gap separates the output interface region of the AWG chip and the array of detector devices.")....111

3. Claim 15 ("The optical transceiver module of claim 12, wherein the AWG chip defines a plurality of sidewalls extending longitudinally from the first end to the second end, and wherein the tapered region of the second end defines an angled surface that extends from a first sidewall of the plurality of sidewalls to a second sidewall of the plurality of sidewalls.")....112

4. Claim 16 ("The optical transceiver module of claim 15, wherein the angled surface has an interior angle of about 41 to 45 degrees relative to the output interface region.")....113

X. CONCLUSION....114

I, Michael Lebby, declare as follows:

I. INTRODUCTION

1. I have been retained as a technical expert in the field of optoelectronics by Perkins Coie LLP ("Perkins Coie") on behalf of Accelight Technologies, Inc. ("ATI"). This Declaration is in support of *inter partes* review of claims 1-4, 10-13, 15, and 16 ("the Challenged Claims") of U.S. Patent No. 10,042,116 ("the '116 patent").

2. I am being compensated for my work on this matter at my standard rate of $550.00 per hour. My compensation in no way depends on the outcome of this proceeding, the content of my testimony, or any issues involved in or related to this proceeding. In preparing this Declaration, I reviewed and considered the '116 patent, the prosecution history of the '116 patent, and the prior art references that I discuss in this Declaration. In addition to these materials, I may consider additional documents and information in forming any supplemental opinions. To the extent I am provided additional documents or information, including any expert declarations filed by Patent Owner in this proceeding, I may offer further opinions.

3. Based on my experience, knowledge of the art at the relevant time, analysis of the prior art references, and the understanding a person of ordinary skill in the art would have of the claim terms in light of the specification, it is my opinion that the

Challenged Claims of the ’116 patent are obvious based on the prior art references discussed below. This Declaration is based on information currently available to me. I reserve the right to supplement the opinions set forth in this Declaration in light of additional discovery or opinions offered by any expert on behalf of Patent Owner in this matter.

II. QUALIFICATION AND EXPERIENCE

A. My Qualifications

4. Stated briefly, I am an engineer with a Ph.D. in Electrical and Electronic Engineering and have worked extensively with electrical and electronic circuits, connectors, electronic and optoelectronic systems, as well as integrated circuit semiconductors for electronic and fiber optic solutions. Overall, I have approximately 40 years of experience working in industry to develop new electronic and optoelectronic based products that I have taken from research to manufacturing.

5. Exhibit A to this Declaration is my current curriculum vitae (“CV”), which provides details on my education, experience, publications, and other qualifications.

B. My Education

6. I received a Bachelor of Engineering degree in Electrical and Electronic Engineering in 1984 from the University of Bradford, UK. I also received a Ph.D. in Electrical and Electronic Engineering in 1987 from the University of Bradford, UK.

And I received a Doctor of Engineering degree in Electrical and Electronic Engineering in 2004 from the University of Bradford, UK.

C. My Professional Experience

7. I am currently Chief Executive Officer (CEO) and Chief Technology Officer (CTO) of GenusTechnik Inc., which is my consulting company, through which I engage in expert witness work.

8. I recently retired as Chairman and CEO of Lightwave Logic Inc. (NASDAQ: LWLG), where I served as a Director of the Board of Directors since 2015.

9. I am a named inventor on over 225 issued U.S. utility patents. My work has led to inventorship in subjects such as semiconductors, electronics, optics, connectors, high frequency electronic products, and optoelectronics. I am the author of more than 60 publications.

10. I am a Fellow grade of three professional organizations: IEEE (Institute of Electrical and Electronic Engineers), NAI (National Academy of Inventors), and Optica (Optical Society of America).

11. Exhibit A includes a summary of my employment history.

D. My Relevant Experience in the Field of Art

12. As described above, and further detailed in my CV (Exhibit A), over the course of my 40-year career in electronics and optoelectronics, I have worked in nearly every aspect of the electronic and optoelectronics business, ranging from

wafers to components, modules, connectors, and cable technology. At the wafer level, I have experience in epitaxial wafer growth (compound semiconductors), electrical and optoelectronic device and circuit design, using modeling and simulation, electrical and optoelectronic device and component fabrication, testing and qualification, the implementation of devices into packages, connectors, and panels, both hermetic and non-hermetic, as well as analysis of package/panel materials such as plastics (including plastic housings such as resin-packaged lead frame housings), optical plastics, metallic-based packages, semiconductor-based packages, and ceramic-based packages for the telecommunications and data-communications industries. I have also designed device packages (through-pin, surface mount, flip-chip, and various combinations thereof) for printed circuit board mounting as well as electrical and optical connectors for various industrial and environmental applications. Many of the designed packages and connectors were implemented into telecommunications and data-communications applications both as manufactured products as well as testing, characterization, and analysis of qualified product for volume scaling. The modules/panels have been designed to work at RF frequencies that include copper wire, twisted wire pair and fiber-optics. I have also worked in industrial research-and-development laboratories to take new high-performance RF-based electrical, electronic, optoelectronic- and photonic-

based technologies from the research proof-of-concept phase through prototyping and qualified manufacturing for volume release. This has included both transfer as well as injection molding techniques for packaging and cabling connector designs.

13. I have been both an entrepreneur (*e.g.*, Ignis Optics Inc, One Chip Photonics, Lightwave Logic Inc.), as well as an intrapreneur (*e.g.*, Motorola, Intel, TE Connectivity (previously Tyco Electronics), AT&T Bell Labs), creating innovative new cabling, connector, modules for telecommunications and data-communications programs, both at venture backed start-ups as well as corporate funded divisions. I have built these entities to develop electronic, optoelectronics, and photonics technology from the laboratory and fabrication clean room to production factories.

14. My career started in the late 1970s at the Ministry of Defense in UK, where I worked at their R&D facility in Malvern (RSRE – Royal Signals and Radar Establishment). I worked on electronic and optoelectronic semiconductor device design, as well as basic and high frequency telecommunications and data-communications electronics for modules, cable, connector, and circuit implementation. My research work on electronics then took me to AT&T Bell Laboratories in 1985, where I pursued research in novel electronic and optoelectronic semiconductor material systems that included FETs, bipolar transistors, optical waveguides, optics, LEDs, laser diodes, and photodetectors. This

research work became in part the subject of my Ph.D. thesis, which was granted in 1987.

15. I moved to Motorola in 1989 to further develop my electronic, optoelectronic, and semiconductor engineering skills, and I became a telecommunications and data-communications Research and Development Manager in Motorola, until I left the company in 1998. During my time at Motorola, I worked on many photonic, electronic, and optical technology projects that included electronic circuits (both analog and digital), electronic cable connectors, twisted wire pairs, electrical and optical interconnects, displays, LEDs, OLEDs, as well as the packaging and reliability of mobile product prototypes. At that time, I was particularly interested in miniaturization of electronics and optoelectronics, and worked on novel designs that included high frequency, high data rate electronics, cables, connectors, and optoelectronics, as well as advanced prototypes of futuristic communications hardware.[1]

---

[1] Communication hardware refers to physical devices and systems used for transmitting data or information between two or more points typically via copper

16. During my time at Motorola as a Research and Development Manager, I designed optical and electrical packages/panels for displays and devices, which included standard TO-cans, over-molded plastic DIL solutions, jacks, plugs, optical waveguides, and ceramic-based and semiconductor-based technologies for the telecommunications and data-communications industries.

17. The research work at Motorola also included work on displays and in particular, miniature displays and optics for pagers, clam-shell phones, and head-mounted displays that included mounting onto eyeglasses (similar in concept to Google Glass™) as well as techniques for electrical and optical connections in these applications.

---

cable, fiber optics cable, optical wireless and RF wireless. Popular examples include modems, routers, switches, modules or transceivers, wireless access points, and various wireless technologies like electrical cables, fiber optic cables, Wi-Fi and Bluetooth. These devices enable data transmission and reception, facilitating communication across networks.

18. I also initiated Motorola's work in optical interconnect (Optobus™) technology, which incorporated both transfer and injection molded optical parts that included the design of multi-channel electrical and optical connector technology as well as multi-channel waveguides. This project involved research and development of a multi-channel electronic IC (integrated circuit) chip for parallel optical interconnect.

19. I was one of Motorola's most prolific inventors, having over 150 issued utility patents as an inventor or a co-inventor by the late 1990s. Many of the photonics, telecommunications, data-communications, electronics, cables, connectors, and optical prototypes with which I was involved were subject to reliability and stress testing that included humidity, temperature, optical, mechanical, and electrical evaluations. These consumer products for datacenter applications were driven by standard electronic ICs and electronic signaling, and I had a role in the design and simulation of these circuits.

20. Between 1998 and 1999, I worked as the Director of Technology/BD (Fiber Optics) for Tyco Electronics (previously AMP). I joined Tyco Electronics as a business development director and director of advanced technology for the telecommunications and data-communications industries that included switches, routers, and datacenters. I was responsible for developing technology related to

cables, connectors, and modules through external interactions that included mergers, acquisitions, strategic alliances, and technical strategic planning as well as leading new technology projects. The projects included popular cable connector jacks and plugs that incorporated high frequency and crosstalk mitigation designs such as twisted wire pairs. Much of that work involved the application of telecommunication and datacenter-based electronic and optoelectronic transceiver modules, electrical and optical connectors, plugs, jacks, and cables for customer qualification specifications.

21. In 1999, I left Tyco and started my employment at Intel. At Intel, I was involved heavily in photonic technology, especially technology that supported silicon photonic device platforms for datacenter applications. As a culmination of this work, I was one of the founders of Intel's silicon photonics division in 2000 and worked to set up a fabrication facility in South San Jose. The work involved integrating silicon FET electronics with optoelectronics that included arrayed waveguide gratings on the same silicon semiconductor wafer. I was also part of Intel Capital's optical investment team, and participated in over 30 investments in photonics, optics, and optoelectronics. Our team's focus included optical devices, packaging, and modules, and the technologies investigated included lasers, LEDs, optics, and optical displays.

22. At the end of 2000, I left Intel and raised venture capital funding for a company called Ignis Optics Inc. The main goal of the company was to design and manufacture, in high volume, very high-performance fiber optic transceiver modules, connectors, and associated optics with data rates up to OC-192, or approximately 10 Gbps for datacenter applications that utilized routers, switches, etc. The fiber optic transceiver modules have the capability of transmitting and receiving optical signals that are controlled using programmable electronics and packaged optoelectronics chips, such as laser diodes, optical lenses, and photodetectors.

23. In 2005, I took up employment for a trade association, based in Washington, D.C., called Optoelectronics Industry Development Association (OIDA). As head of this trade association, which included as members both electronics, photonics, and optics manufacturers as well as vendors for telecommunication, data-communication, datacenter cables, fiber optics, display, cameras, sensing, defense, aerospace, LED lighting, etc., I was responsible, in part, for industry-based technology roadmaps. I implemented common industry roadmap methodologies with common features such as "Red Brick Walls" and transferred them into technology roadmaps for the industry in which telecommunication cables, fiber-optic cables, optics, fiber, cameras, optical sensors, displays, and their associated

packaging/connectors, were featured. (OIDA roadmaps featured purple brick walls to show differentiation from the semiconductor industry.)

24. In 2010, I became the General Manager and CTO of Translucent, Inc., a high-tech start-up company which developed and manufactured silicon and rare earth oxide based epitaxial semiconductor wafers. I patented a number of electronic FET device designs using rare earth oxides while I was employed at Translucent.

25. Throughout my career, I have also had an active role in a number of technical professional organizations, including, among others, IEEE Components, Packaging, and Manufacturing Technology (CPMT), IEEE Electronic Components and Technology Conferences (ECTC), IEEE TC-10 (Technical Committee on Optoelectronics), and IEEE Optoelectronics Industry Development Association (OIDA). Through these organizations, I have consistently been a part of committees, events, and workshops relating to semiconductor, optoelectronics, electronics, and packaging technology.

26. I also serve as a Technical Expert/Consultant for the European Commission. In my work at the European Commission, I review and advise on general electronics, telecommunications, data-communications, datacenters, cable interconnects, connectors, semiconductors, photonics, optoelectronics, imaging, sensing, display

(LCD, LED, OLED etc.), and related ICT (Information and Communications Technology) technology.

27. My CV provides further information about my experience and qualifications and includes a listing of my patents. My CV also includes the publications I have authored and the matters on which I have served as an expert witness in the last 4-10 years.

III. LEGAL STANDARDS

A. Claim Construction

28. I have been informed by counsel and I understand that the first step in determining the patentability of a patent claim is for the claim terms to be properly construed. I understand that claim terms are construed in light of the claim language, the patent specification, and the prosecution history of the patent. I also understand that extrinsic sources, for example, dictionaries, treatises, textbooks, etc. may shed light into the meaning of claim terms. I further understand that a claim term is given its plain and ordinary meaning as understood by those skilled in the art if that claim term does not need construction.

B. Anticipation

29. I am not an attorney and have not been asked to offer my opinion on the law. However, as an expert offering an opinion on whether the Challenged Claims of the

’116 patent are unpatentable, I have been told that I am obliged to follow existing law.

30. I have been told the following legal principles apply to an analysis of patentability pursuant to 35 U.S.C. § 102, a provision in the patent law regarding anticipation. I have been told that, in an *inter partes* review proceeding, patent claims may be deemed unpatentable if it is shown by preponderance of the evidence that the claims were anticipated by prior art patents or printed publications.

31. I have been told that for a claim to be anticipated under § 102, every limitation of the claimed invention must be disclosed by a single prior art reference, viewed from the perspective of a person of ordinary skill in the art.

C. Obviousness

32. I have been told that under 35 U.S.C. § 103, “[a] patent for a claimed invention may not be obtained, notwithstanding that the claimed invention is not identically disclosed as set forth in section 102 , if the differences between the claimed invention and the prior art are such that the claimed invention as a whole would have been obvious before the effective filing date of the claimed invention to a person having ordinary skill in the art to which the claimed invention pertains.”

33. When considering the issues of obviousness, I have been told that I am to do the following:

a. Determine the scope and content of the prior art;

b. Ascertain the differences between the prior art and the claims at issue;

c. Resolve the level of ordinary skill in the pertinent art; and

d. Consider evidence of secondary indicia of non-obviousness (if available).

34. I have been told that the relevant time for considering whether a claim would have been obvious to a person of ordinary skill in the art is the time of alleged invention, which I have assumed is shortly before the effective filing date of the application leading to the ’116 patent.

35. I have been told that any assertion of secondary indicia of non-obviousness must be accompanied by a nexus between the merits of the invention and the evidence offered.

36. I have been told that a reference may be combined with other references to disclose each element of the invention under § 103. I have been told that a reference may also be combined with the knowledge of a person of ordinary skill in the art and that this knowledge may be used to combine multiple references. I have also been told that a person of ordinary skill in the art is presumed to know the relevant prior art. I have been told that the obviousness analysis may account for the inferences and creative steps that a person of ordinary skill in the art would employ.

37. I have been told that whether a prior art reference renders a patent claim unpatentable as obvious is determined from the perspective of a person of ordinary skill in the art. I have been told that there is no requirement that the prior art contain an express teaching or suggestion to combine known elements to achieve the claimed invention, but that a motivation or rationale for combining prior art elements in a way that realizes the claimed invention is required to show obviousness, and that it seeks to counter impermissible hindsight analysis.

38. I have been told that when a work is available in one field, design alternatives and other market forces can prompt variations of it, either in the same field or in another. I have been told that if a person of ordinary skill in the art can implement a predictable variation and would see the benefit of doing so, that variation is likely to be obvious. I have been told that, when there is a design need or market pressure and there are a finite number of predictable solutions, a person of ordinary skill in the art has good reason to pursue those known options that realizes the claimed invention. In addition, I have been informed and I understand that there must be a reasonable expectation of success—not absolute predictability of success—in combining prior art teachings to arrive at the claimed invention.

IV. DEFINITION OF A PERSON OF ORDINARY SKILL IN THE ART

39. At the effective filing date of the ’116 patent, a person of ordinary skill in the art (“POSITA”) would have had (1) a bachelor’s degree in electrical or electronics

engineering or an equivalent degree, and (2) 2-4 years of work experience in optoelectronics, optical networking, optical communications, or a closely related field.

40. Based on my background and experience described in Section II, above, I qualify as a POSITA in the technology field related to the ’116 patent.

V. RELEVANT TECHNICAL BACKGROUND AND OVERVIEW OF THE ’116 PATENT

41. The ’116 patent discloses a technique for direct optical coupling of a plurality of photodetectors to the outputs of an optical demultiplexer (e.g., an AWG demultiplexer) to reduce fiber use and insertion loss. Ex. 1001, Title, Abstract, 1:9-12. The ’116 patent also discloses an optical transceiver module that utilizes the disclosed direct optical coupling technique. *Id.*

42. The operation of an optical transceiver module includes transmitting a multiplexed optical signal (e.g., a wavelength division multiplexed (WDM) signal) through an optical fiber to a multi-channel receiver optical sub-assembly (ROSA), where the input signal is demultiplexed into separate channel wavelengths by an AWG (arrayed waveguide grating) demultiplexer for detection, amplification, and conversion to electrical signals. *Id.*, 1:26-29, 2:15-27, 11:47-12:3. Detectors, such as photodiodes, are provided to receive the demultiplexed outputs of the AWG, with a single detector receiving a single channel wavelength, and providing the same to

associated circuitry for amplification and conversion. *Id.*, 4:26-34. The disclosed optical transceiver further includes a multi-channel transmitter optical sub-assembly (TOSA) having at least one laser package for transmitting optical signals at different channel wavelengths. *Id.*, 11:47-12:3.

43. Specifically, the ’116 patent claims to have invented an optical transceiver 400 having a transceiver housing 302, a multi-channel TOSA 310, and a multi-channel ROSA 312. *Id.*, 7:3-7, Fig. 4 (shown below). ROSA 312 further includes an AWG device 402 for demultiplexing multi-channel optical signals and direct optical coupling of the demultiplexed optical signals to an array of photodetectors and associated TIAs (transimpedance amplifiers) 403 to reduce insertion loss associated with using fibers or waveguides. *See, e.g., id.*, Title, Abstract, 1:9-12, 3:1-22, 7:40-51, Fig. 4.

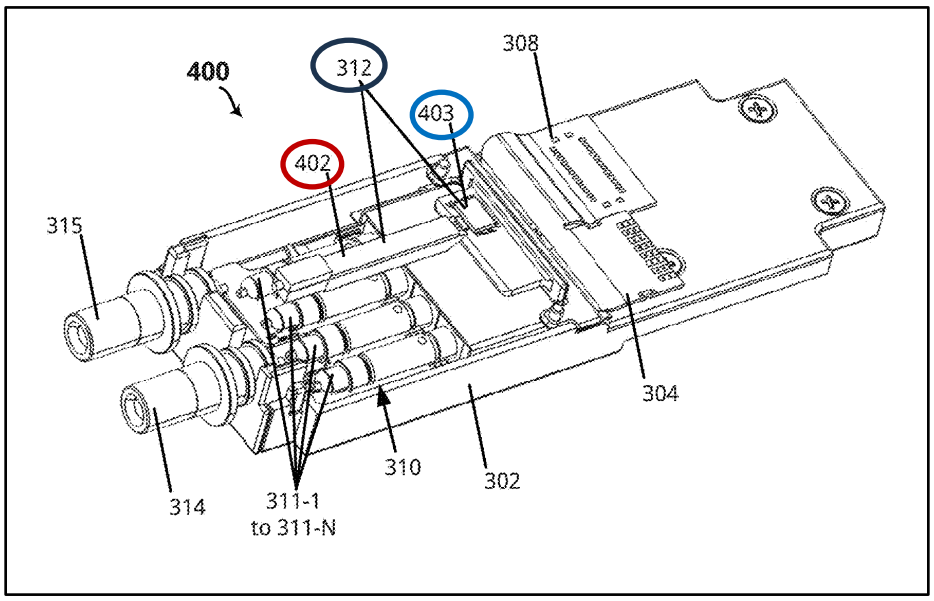

Ex. 1001, Fig. 4 (showing transceiver 400 having TOSA 310 and ROSA 312, and **ROSA 312** further including an **AWG device 402** for demultiplexing multi-channel optical signals and direct coupling the demultiplexed signals to an array of photodetectors and **TIAs 403**)

44. The AWG device 402 includes an AWG chip 503 having a first end 505 coupled to an input coupling region 504, and a second end 506 adjacent to a direct coupling interface region 517. *Id.*, 7:60-66. In some embodiments, the end of input coupling region 504 includes a mounting surface 510 having an angle of about 8 degrees to reduce back reflection when launching light into AWG chip 503. *Id.*, 8:20-30, Fig. 5A. In other embodiments, the first end 505 of the AWG chip may include a mounting surface with an angle of about 8 degrees to facilitate proper alignment between an input fiber 508 and an input area of the AWG chip. *Id.*

45. AWG chip 503 comprises a planar lightwave circuit (PLC) formed on a substrate 502, e.g., a silicon or a silicon-based substrate, and the PLC is configured to demultiplex a multi-channel input signal into a plurality of channel wavelengths and to launch the channel wavelengths into a plurality of output waveguides 511. *Id.*, Abstract, 8:31-43, 8:53-57. Output waveguides 511 transmit the plurality of channel wavelengths along a first light path 806 that extends longitudinally towards the second end (direct coupling end) 506 of AWG chip 503. *Id.*, 10:11-14. Second

end 506 has an inclined/angled surface 520 with an angle 514 of about 40 to 45 degrees relative to light path 806. *Id.*, 10:17-24. According to the '116 patent, angle 514 allows "a substantial amount of light, e.g., at least 80 percent," to reflect towards detectors 804 along a second light path 530 that is "generally orthogonal" to first light path 806 and to pass through direct coupling interface region 517. *Id.*, 10:30-37, Fig. 8. A portion of substrate 502 (on which the PLC is mounted) is removed to expose direct coupling interface region 517, so that optical signals traveling along light path 530 do not pass through the substrate. *Id.*, 9:46-50, Figs. 5A and 8. Light traveling along second light path 530 is received by detectors 804 of a photodetector array 801. *Id.*, 11:1-4. Each detector 804 is aligned beneath the direct coupling interface region 517, and specifically beneath a respective output waveguide 511, to directly couple each demultiplexed output of AWG chip 503 with a detector 804, without requiring an additional waveguide or fiber device therebetween. *Id.*, 11:10-27, Fig. 9. The detectors 804 are electrically connected with associated circuitry, e.g., TIAs, via wire bonding 901 or other suitable electrical interconnection. *Id.*

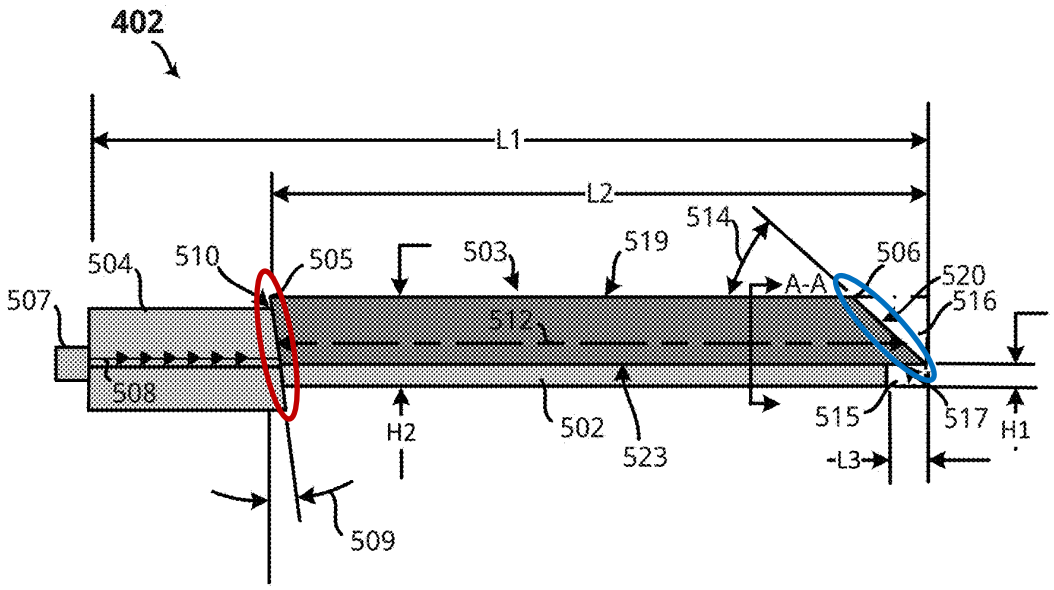

FIG. 5A

Ex. 1001, Fig. 5A (showing AWG chip 502 having an angled **surface 505** at a first (input) end and an **angled surface 520** at a second (output) end)

46. But as I have discussed in detail below, optical transceivers with TOSAs and ROSAs, AWG demultiplexers, and direct coupling of demultiplexed outputs to a photodetector array using an angled surface, were each well known before the filing of the ’116 patent.

VI. CLAIM CONSTRUCTION

47. Based on my review of the ’116 patent and the Challenged Claims, I believe only the claim term “substrate” recited in claim 1 would benefit from claim

construction. I have applied the plain and ordinary meaning of all other claim terms and limitations in the Challenged Claims.

A. "Substrate"

48. The term "substrate" in claim 1 should be construed to mean "a supporting base that is part of the AWG chip and on which the planar lightwave circuit (PLC) is mounted." Claim 1 explicitly recites that the AWG chip comprises, i.e., includes or contains, a "substrate" and a PLC is "disposed on the substrate." Ex. 1001, 12:23-31. The claim language thus fully supports construing "substrate" to mean a supporting base that is included within the AWG chip, and is not external to it, and on which the PLC is mounted.

49. The specification of the '116 patent also fully supports this construction. For example, the specification discloses that AWG chip 503 "include[es] the substrate 502," and thus specifies that the substrate is part of the AWG chip. Ex. 1001, 9:55-57 ("The AWG chip 503 can include a length L2 of about 10 mm, and a height H2 of about 1.30 mm including the substrate 502, and about 1 mm without."); *see also id.*, 9:46-49 ("Formation of the AWG chip 503 can include removing a portion of the substrate [502] generally indicated at 515 to expose the output interface region 517"), 12:4-11 (discussing removing a portion of the substrate to form the AWG chip), Fig. 5A.

50. The specification also discloses that the substrate is a supporting base of the AWG chip on which the PLC is mounted. For example, the specification discloses that "AWG chip 503 can comprise, for example, a planar lightwave circuit (PLC) such as a silica-based planar lightwave PLC device. … Processes for AWG chips can include, for example, forming a circuit pattern using photolithography, etching and deposition and/or epitaxial growth **on a substrate, e.g., a silicon or silicon-based substrate**." *Id*., 8:31-38 (emphasis added); *see also id*., 12:4-11 ("a method of forming an arrayed waveguide grating (AWG)" comprises "depositing sequential layers of cladding and core material **onto a substrate to form a planar lightwave circuit (PLC), removing a portion of the substrate to expose an output interface region of the PLC,** and removing a portion of the PLC to provide a tapered region proximal to the output interface region of the PLC.") (emphasis added).

51. Thus, claim 1 and the '116 patent specification expressly disclose that the AWG chip comprises a PLC and a "substrate"; that the "substrate" is etched to expose an output interface region; and that the "substrate" is not a component separate from (or external to) the AWG chip. Indeed, a POSITA in the field of optoelectronics would clearly understand, based on their relevant knowledge and experience in the field, that the "substrate" is a base of the AWG chip on which the PLC is formed or mounted. The term "substrate" in claim 1 should be construed

accordingly to mean "a supporting base that is part of the AWG chip and on which the planar lightwave circuit (PLC) is mounted."

VII. OVERVIEW OF THE PRIOR ART

A. Lee (Ex. 1004)

52. U.S. Patent Publication No. 2014/0183344 to Lee et al. (hereinafter "Lee") was published on July 3, 2014, and is therefore prior art to the '301 patent.

53. Lee discloses a hybrid optical coupling module, i.e., using two different materials/platforms, and comprises an optical unit for transmitting light and an electrical unit for converting an optical signal into an electrical signal. Ex. 1004, Abstract, ¶[0003]. More specifically, Lee discloses an optical module comprising 1) an optical unit 300 that includes an optical transmission means in the form of a planar lightwave circuit (PLC) 110 and array lens 200, and 2) an electrical unit 400 that includes a photodiode (PD) 430, transimpedance amplifier (TIA) 440, and substrate 420. *Id.*, ¶¶[0033], [0036], [0038], [0043]-[0045], Figs. 2, 8, 10 (depicted below).

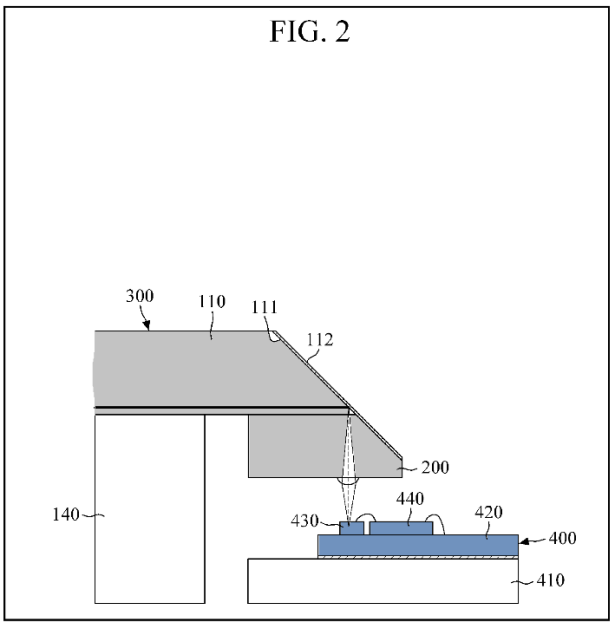

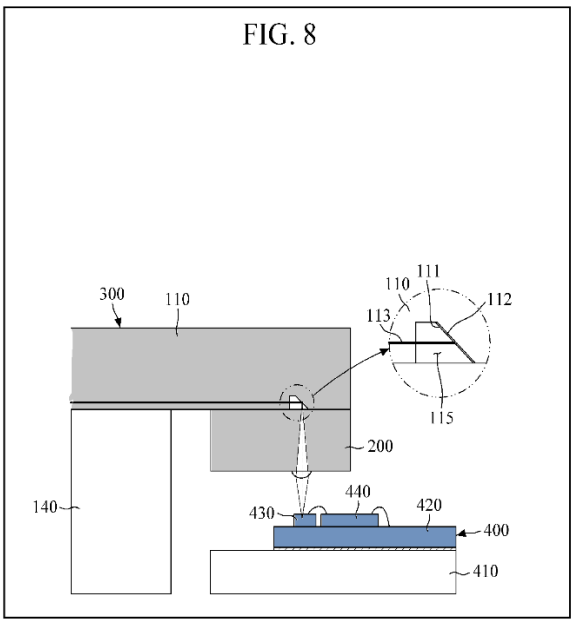

Ex. 1004, Figs. 2 and 8 (showing direct optical coupling between **optical unit 300** and **electrical unit 400**)

54. Lee discloses that one application of the optical coupling module is an optical transceiver, wherein the PLC is used as a demultiplexer comprising an arrayed waveguide grating (AWG). *Id.*, ¶¶[0008]-[0009]. Lee further discloses that the optical coupling between optical unit 300 and electrical unit 400 is achieved by having an inclined surface 111 formed at an angle of 45 degrees on one side of PLC 110 and by providing a reflection layer 112 on inclined surface 111, for vertically reflecting an optical signal from optical unit 300 to photodiode 430 of electrical unit 400. *Id.*, ¶¶[0049]-[0054], [0073]-[0074], Figs. 2 and 8 (depicted above). Lee additionally discloses that in another embodiment, as shown in Figure 8, instead of polishing the entire second end of PLC 110 and array lens 200 at the angle of 45

degrees, a concave space 115 may be formed in a part of PLC 110 where light exits and a 45-degree inclined surface may be formed at the end of the concave space 115. See *id*., Fig. 8, ¶[0053].

B. Kim (Ex. 1005)

55. U.S. Patent Publication No. 2014/0169389 to Kim et al. (hereinafter "Kim") was published on June 19, 2014, and is therefore prior art to the '301 patent.

56. Kim discloses an optical receiver module 100 comprising, among other things, an **optical connector 110**, a **demultiplexer 120** having an integrated optical device 130, a **photodetector array 140**, a **pre-amplifier 150**, supporting part 170, and **supporting part 180**, as shown in Figure 1 (below). Ex. 1005, ¶[0022], Fig. 1; *see also id.*, Abstract, ¶¶[0009], [0025] (discussing that optical device 130 and demultiplexer 120 may have a "united structure").

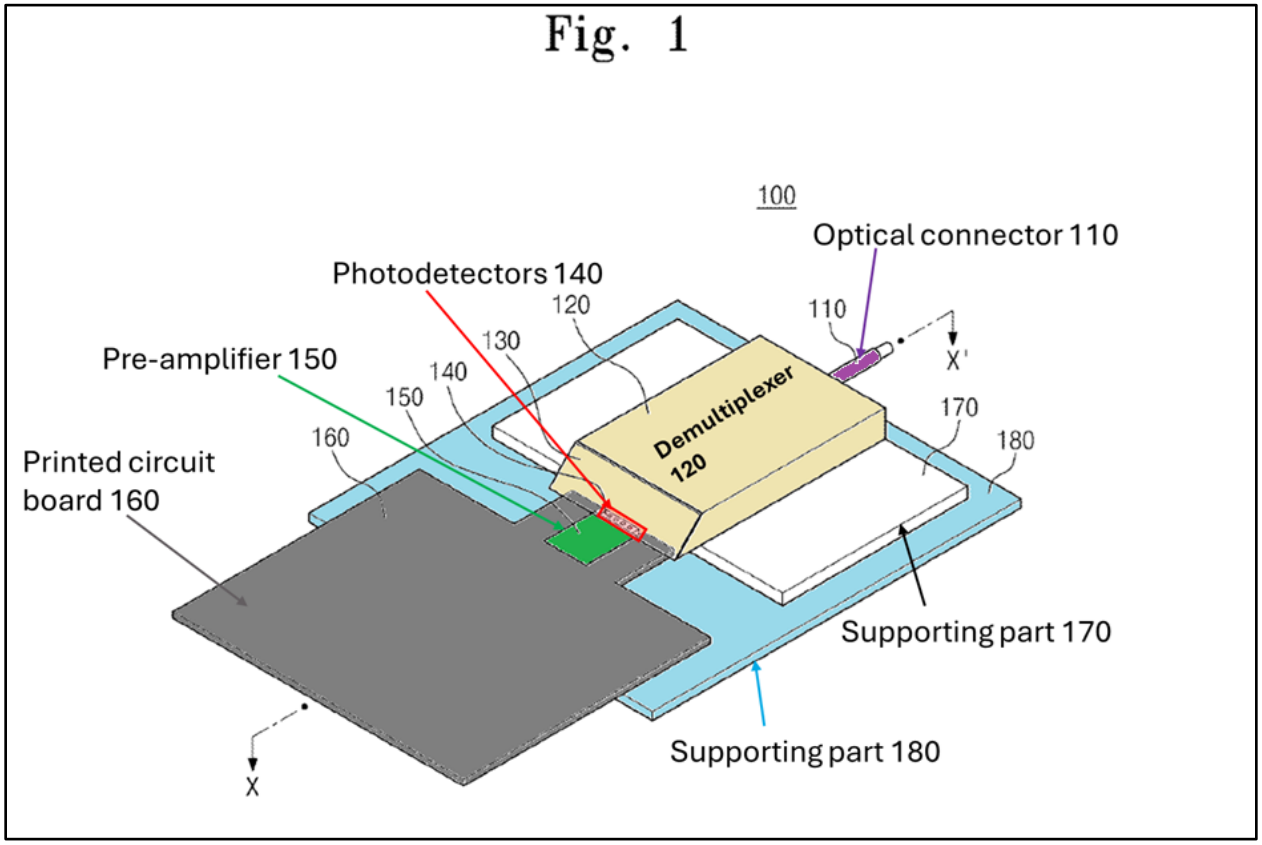

Ex. 1005, Fig. 1 (annotations added)

57. Optical receiver module 100 "uses a wavelength division multiplexing (WDM) technique which employs multiple light wavelengths to transmit signals of various channels through a single optical fiber." *Id.*, ¶[0022]. Optical connector 110 receives a multi-channel optical signal through a single optical fiber and transmits the input signal to a demultiplexer 120. *Id.*, ¶[0023]. Demultiplexer 120, which may have an AWG structure, divides the multi-channel input optical signal into separate optical signals corresponding to each channel, and transmits the divided signal to optical device 130. *Id.*, ¶¶[0024], [0040]. As shown in Figure 1, above, optical device

130 and demultiplexer 120 may be combined with each other to constitute a unitary structure. *Id*., ¶¶[0025], [0042]. Optical device 130 includes a single mirror 131 and N lenses 132 (where N represents that number of input channels). *Id*., ¶¶[0032], [0033]. An end portion of optical device 130 may be cut at an angle of 45 degrees and the cut surface may then be polished. *Id*., ¶[0034]. A silica-based material may be coated on the outer side of the cut surface to form mirror 131. *Id*. "The mirror 131 reflects the optical signal transmitted in a horizontal direction through the demultiplexer 120, and the reflected optical signal is transmitted in a vertical direction to the lenses 132." *Id*., ¶¶[0034], [0041], Fig. 4. Each optical signal (corresponding to a channel wavelength) passes through one of the lenses 132 of optical device 130 and is optically coupled with a corresponding photodetector 140, which converts the received optical signal into an electrical signal and transmits the electrical signal to a pre-amplifier 150, which then transmits the amplified signal to a printed circuit board 160 for external transmission. *Id*., ¶¶[0029], [0030], [0041], [0042], Figs. 2 and 3 (reproduced below).

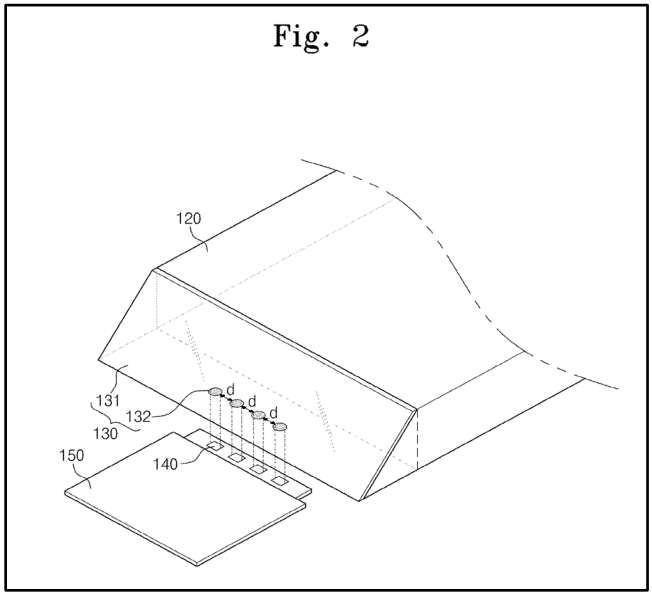

Ex. 1005, Fig. 2.

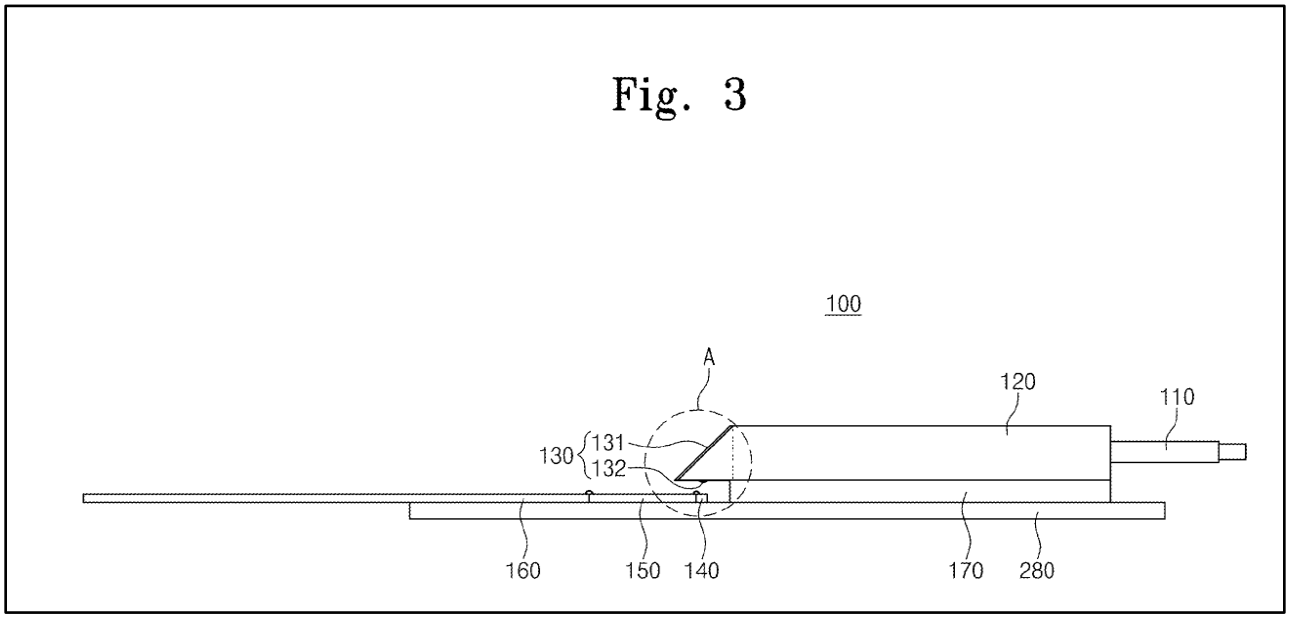

Id., Fig. 3.

C. Ho (Ex. 1006)

58. U.S. Patent Publication No. 2014/0341578 to Ho et al. ("Ho") was published November 20, 2014, and is therefore prior art to the '301 patent.

59. Ho discloses an optical transceiver module for use in a wavelength division multiplexed (WDM) optical system, for example, in an optical line terminal (OLT) in a WDM passive optical network (PON). Ex. 1006, ¶[0018]. Specifically, Ho discloses a WDM-PON 100, which includes at least one OLT 110 coupled to a plurality of optical networking terminals (ONTs) or optical networking units (ONUs) 112-1 to 112-*n* via optical fibers, waveguides, and/or paths 114 and 115-1 to 115-*n*, as shown in Figure 1 (reproduced below). *Id.*, ¶[0020]. The OLT 110 may be located at a central office of the WDM-PON 100, and the ONUs 112-1 to 112-*n* may be located in homes, businesses or other types of subscriber location or premises. *Id.*, ¶[0021]. The WDM-PON 100 may use different wavelength bands for transmission of downstream and upstream optical signals relative to the OLT 110 to avoid interference between the received signal and the back reflected transmission signal on the same fiber. *Id.*, ¶[0023]. The ONUs 112-1 to 112-n may thus be configured to receive an optical signal on an assigned downstream channel wavelength (λ_L) within the L -band, and they may be configured to transmit at an assigned upstream channel wavelength (λ_C) in the C-band. *Id.*, ¶¶[0023], [0024].

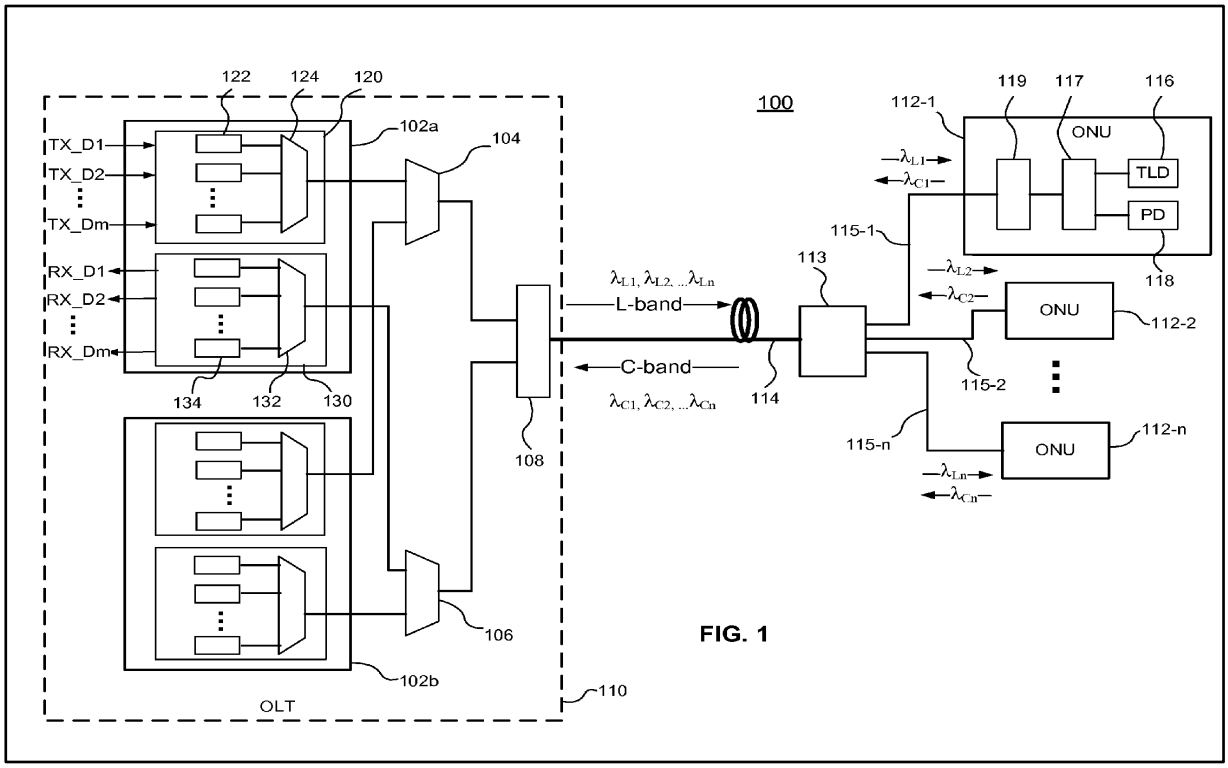

FIG. 1

Ex. 1006, Fig. 1.

60. The OLT 110 may be configured to generate multiple optical signals at different channel wavelengths (λ_{L1}, λ_{L2}, . . . λ_{Ln}) and to combine the optical signals into the downstream WDM signal. *Id*., ¶[0027]. Similarly, the OLT 110 may be configured to receive and separate optical signals at different channel wavelengths (λ_{C1}, λ_{C2}, . . . λ_{Cn}) from an upstream WDM signal. *Id*. The OLT 110 may thus include multi-channel optical transceivers 102a, 102b, and each transceiver may include a multi-channel TOSA 120 for generating and combining the optical signals at the multiple channel wavelengths, and a multi-channel ROSA 130 for receiving and separating the optical signals at the multiple channel wavelengths. *Id.*

61. Ho further discloses an exemplary optical transceiver module 202, as shown in Figure 3 (reproduced below), for use in OLT 110. *See also id.*, Fig. 2, ¶[0033]. Optical transceiver module 202 includes a transceiver housing 210a, 210b containing a multi-channel TOSA 220, a multi-channel ROSA 230, and a dual fiber type direct link adapter 250 directly linked to the TOSA 220 and the ROSA 230 for providing the optical input and output. *Id.*, ¶[0033]. TOSA 220 includes an array of lasers that are coupled to a multiplexer (such as an AWG) 225. *Id.*, ¶[0037]. Each laser generates light at a different channel wavelength and the AWG multiplexer combines the different channel wavelengths into a single WDM optical signal. *Id.*, ¶¶[0028], [0029], [0037], [0058].

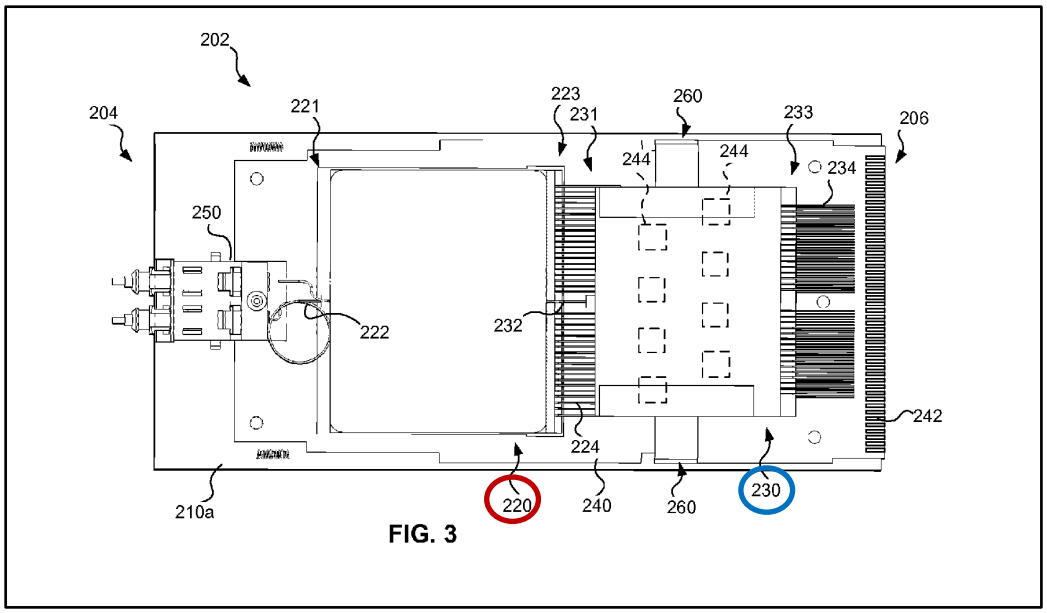

FIG. 3

Ex. 1006, Fig. 3 (showing an optical transceiver 202 having a housing portion 210a and including a **TOSA 220** and a **ROSA 230**)

62. Likewise, ROSA 230 of optical transceiver module 202 includes an AWG demultiplexer 235. *Id.*, ¶[0042]. The ROSA is configured to receive a WDM optical signal on multiple channel wavelengths and to demultiplex (divide) the WDM signal into individual channel wavelengths. *Id.*, ¶[0057]. Optical outputs 237 of the demultiplexer 235 are "directly optically coupled" to an array of photodetector 236, having photodiodes 270, without any intermediate fibers. *Id.*, ¶¶[0042], [0043]. The outputs of photodetectors 236 are electrically connected to the ROSA pins 234 at the electrical connection end 233 via TIAs (transimpedance amplifiers) 274. *Id.*, ¶¶[0042]-[0045], Fig. 3.

D. Bernasconi (Ex. 1007)

63. The article "Design and Challenges in a 100 Gb/s Hybrid-Integrated Photonic Circuit" authored by Bernasconi et al. (hereinafter "Bernasconi"), was presented in the European Conference and Exhibition on Optical Communication as paper Tu.4.E.3, and was published in the OSA Technical Digest (online) (Optica Publishing Group) in 2012, and is therefore prior art to the '116 patent.

64. Bernasconi discloses a hybrid-integrated photonic circuit having "10-channel parallel transmitter and receiver optical subassemblies (TOSA & ROSA) with an integrated capacity of 107 Gbps." Ex. 1007, pg. 1 col. 1. The TOSA and ROSA include "arrays of DFB lasers and avalanche photodiodes (APD) combined with silica arrayed waveguide gratings as multi-demultiplexers." *Id.*

65. The ROSA of Bernasconi's hybrid-integrated photonic circuit comprises "[f]ree-space collimating optics" to "feed the incoming stream into a silica AWG demultiplexer that separates the 100-GHz spaced channels." *Id.*, pg. 2 col. 1. The AWG includes a PLC circuit for demultiplexing and an angled facet on one end to redirect the demultiplexed light onto an array of APDs. *Id.*; *see also id.* Fig. 2 (shown below). "By careful control of the design of the optical path from the AWG facet to the APDs," the circuit "achieve[s] high coupling without having to add any intermediate lenses." *Id.*, pg. 2, col. 1. Bernasconi's circuit design thus "allows for the use of low-loss, low-crosstalk, PLC-based demultiplexers combined with high-sensitivity III-IV—based APDs." *Id.*

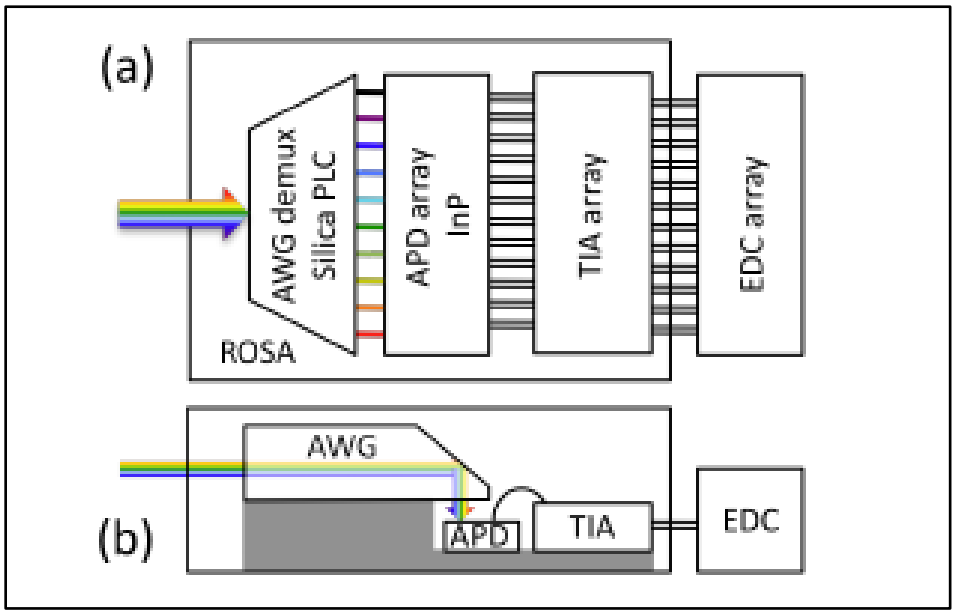

Ex. 1007, Fig. 2 (showing ROSA schematic, top view (a) and side view (b))

E. Soldano (Ex. 1008)

66. U.S. Patent No. 9,768,901 to Soldano et al. (hereinafter "Soldano") was filed February 12, 2015, and is thus prior art to the '116 patent.

67. Soldano discloses a method of coupling light in and out of silicon photonics chips by using AWG-based multiplexers and demultiplexers in glass PLCs to either divide multi-wavelength light into individual channels, or combine them into a multiplexed signal, before entering or exiting the silicon. Ex. 1008, 2:64-3:5, 3:17-25. Specifically, Soldano discloses a photonics integrated circuit chip having a silicon photonics substrate 301 and a PLC 302, which includes a demultiplexer comprising an AWG structure 404 to demultiplex an optical signal carrying many modulated channel wavelengths into N individual channels. Ex. 1008, 7:24-8:28, Figs. 3-5.

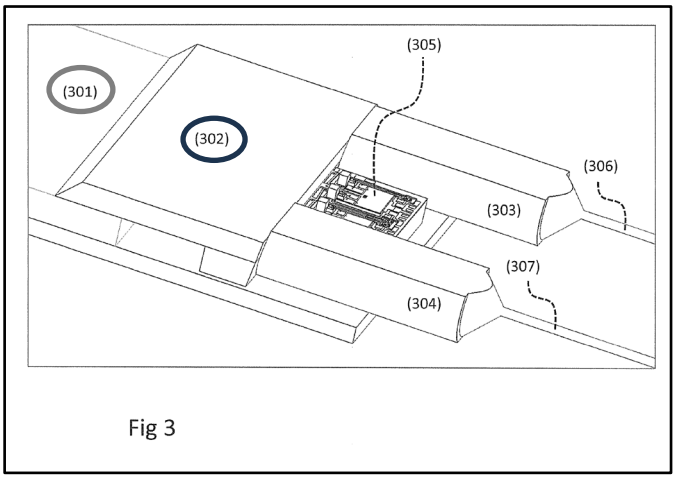

Ex. 1008, Fig. 3 (showing Soldano's photonic integrated circuit chip having a **substrate 301** and a **PLC 302**)

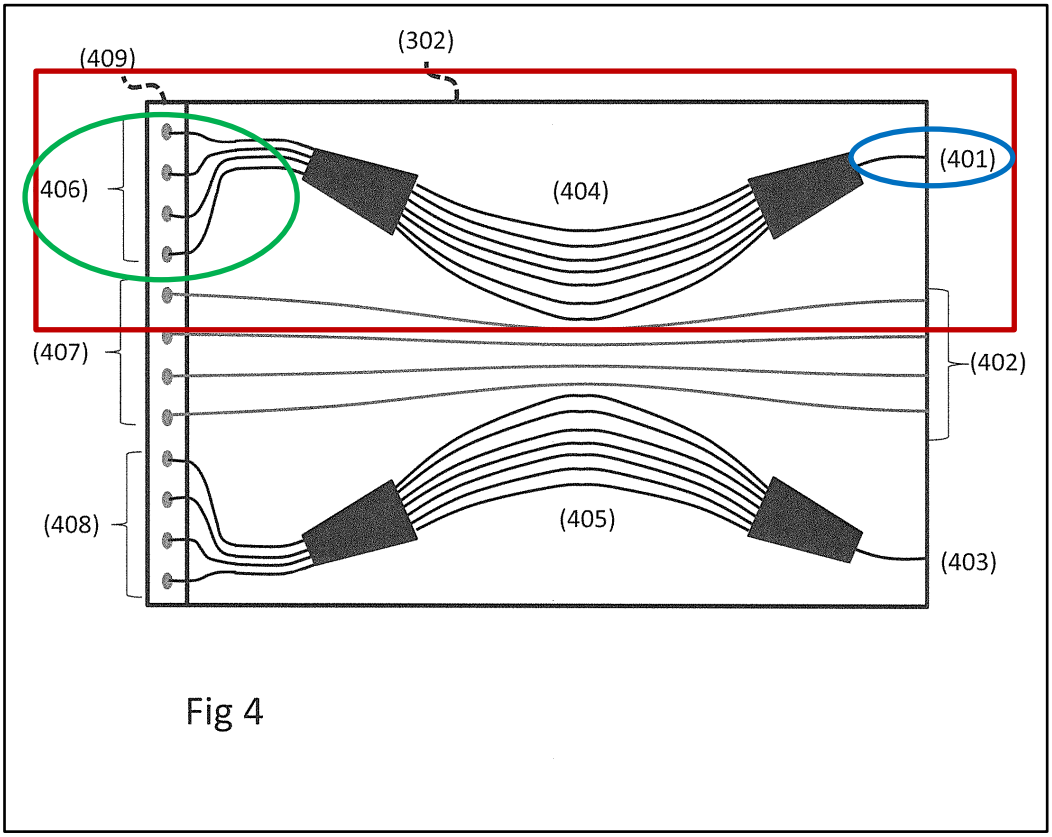

Ex. 1008, Fig. 4 (showing PLC 302 includes a **demultiplexer AWG 404**, which is connected to **an input waveguide 401** on one end and **four output waveguides 406** at the other end)

68. Soldano further discloses that PLC 302 includes an inclined region defined by an angle polish 409. *Id.*, Fig. 5 (showing an end of PLC 302 having an angle polish 409), 8:8-20, 9:15-37. Demultiplexed light is reflected down by angle polish 409 into a grating coupler 505, which is a periodic grating etched onto the surface of waveguide 506. *Id.*, Fig. 5, 9:28-37, 9:58-10:9. Soldano further teaches that instead of using a grating coupler 505, demultiplexed light may be received by a

photodetector array provided on substrate 301 to convert the light into electrical signals. *Id.*, 10:10-19 ("Depending on the silicon technology, the light in the glass PLC 302 could be deflected down by the side polish 409 and instead of hitting a grating coupler 505 and entering a waveguide 506, could instead hit a photodetector that would be placed in lieu of the grating coupler 505. The photodetector would then be electrically connected to the transimpedance amplifier. This may be simpler than the light first going via a grating coupler to a waveguide and then to a photodetector."), Fig. 5.

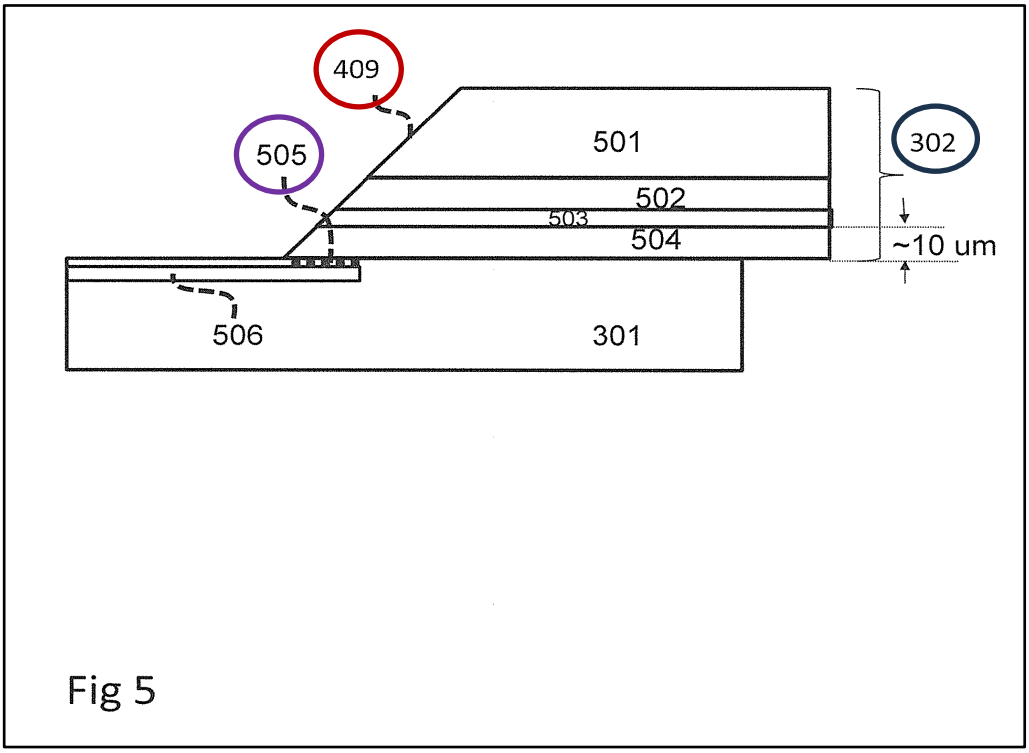

Ex. 1008, Fig. 5 (showing **PLC 302** having an **angled end 409** to reflect demultiplexed light onto a **grating coupler 505** or photodetector array 601)

F. Yoshikawa (Ex. 1009)

69. U.S. Patent Publication No. 2005/0286839 to Yoshikawa (hereinafter "Yoshikawa") was published on December 29, 2005, and is thus prior art to the '116 patent.

70. Yoshikawa discloses an optical transceiver 1 that comprises a TOSA 21 and a ROSA 22, each of which is configured to have a package 21a/22a, a sleeve assembly 21b/22b, and alignment member 21c/22c. Ex. 1009, ¶¶[0036], [0040], Figs. 2A, 2B; *see also id.*, ¶[0039] (noting that the same description applies to TOSA 21 and ROSA 22). "Within the package 21a, a semi-conductor laser diode for the TOSA 21, while a photodiode for the ROSA 22, are installed." *Id.*, ¶[0041]. As shown in Figure 2B, below, "[t]he sleeve assembly 21b is mounted on the top of the package 21a through the alignment member 21c. The sleeve assembly 21b includes, from the side of the alignment member 21c, a bush 33, a stub 34, a sleeve 32 and a sleeve cover 31." *Id.*, ¶[0042].

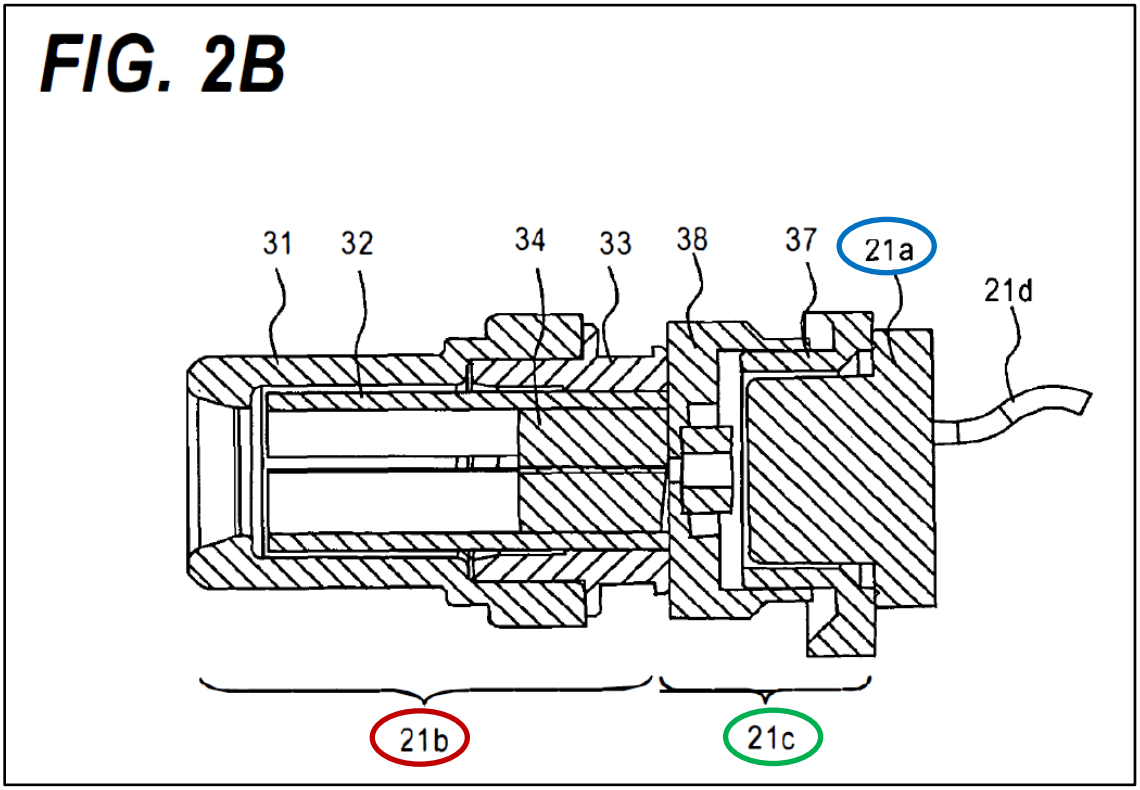

Ex. 1009, Fig. 2B (showing components of a TOSA 21, specifically **package 21a**, **sleeve assembly 21b**, and **alignment member 21c** between the package and the sleeve assembly)

71. Yoshikawa discloses, in relevant part, that "one end surface 34a of the stub 34 [of sleeve assembly 21b], i.e., the surface [that] optically couples with the alignment member 21[c] is processed to incline by 5 to 7 degrees to a plane perpendicular to an optical axis X of the sleeve assembly 21b. This arrangement suppresses light emitted from the laser diode in the package 21a from being reflected by this end surface 34a to the direction parallel to the optical axis X. Accordingly, the reflected light is prohibited from entering the laser diode and causing the optical noise

source." Ex. 1009, ¶[0043]; *see also id.*, Fig. 3 (depicted below). A POSITA would have understood that in the case of ROSA 22, the angled junction between stub surface 34a and alignment member 22a would prevent back reflection of the optical signal received by the optical components of package 22a via sleeve assembly 22b. While Yoshikawa does not expressly disclose single mode optics or single mode fibers, as is understood with Lee, Kim, Bernasconi, and Soldano, a POSITA would have understood that the angled junction taught by Yoshikawa would have been equally applicable to single mode and multimode optics/fibers because Yoshikawa teaches that its connector can be used with GBIC transceivers and SC connectors which can be either single mode or multimode. And a POSITA would have been motivated to use the angled junction taught by Yoshikawa to minimize back reflection of optical signals.

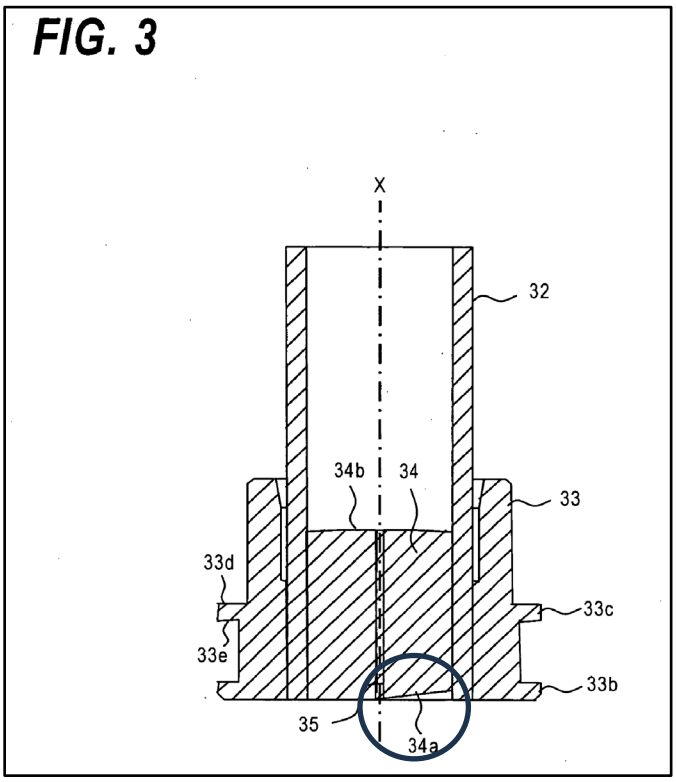

Ex. 1009, Fig. 3 (showing **surface 34a**, which optically couples with alignment member 21c/22c, is at an angle of 5 to 7 degrees to a plane perpendicular to an optical axis X of the sleeve assembly 21b/22b)

VIII. LEE-BASED GROUNDS

A. [Ground 1] Claims 1-4, 10, and 11 are Rendered Obvious by Lee in View of Kim

1. Independent claim 1

72. Lee in view of Kim discloses each and every limitation of claim 1.

a. 1[preamble] ("An arrayed waveguide grating (AWG) chip comprising:")

73. Lee discloses an optical unit 300 that is mounted on a sub-mount 140 and includes a planar lightwave circuit (PLC) 110. Ex. 1004, ¶¶[0033], [0035], [0036], [0038], [0043]-[0046]. Lee further discloses that one application of the PLC is a demultiplexer comprising an arrayed waveguide grating (AWG). *Id.*, ¶[0009]. While Lee does not explicitly disclose the AWG structure and functionality within the PLC, and instead focuses on the direct optical coupling between optical unit 300 and the photodiodes 430 on electrical unit 400, Kim discloses such an AWG demultiplexer chip.

74. Specifically, Kim discloses "an optical receiver module 100 [which] includes an optical connector 110, a demultiplexer 120, an optical device 130, a photodetector 140, a pre-amplifier 150, a printed circuit board 160, a first supporting part 170, and a second supporting part 180." Ex. 1005, ¶[0022]. Kim further discloses that demultiplexer 120 may be an AWG demultiplexer. *Id.*, ¶¶[0022]-[0024].

75. Indeed, both Lee and Kim describe modules for optical communication, and both are single mode solutions, i.e., using single mode fibers/waveguides. AWGs are also single mode optics chips. As such, a POSITA would have readily known to consider the teachings of Lee and Kim together given their design compatibility and similar teachings. Lee's optical unit 300 and sub-mount 140, wherein PLC 110 is

modified in view of Kim to have AWG structure and functionality, together form an "AWG chip."

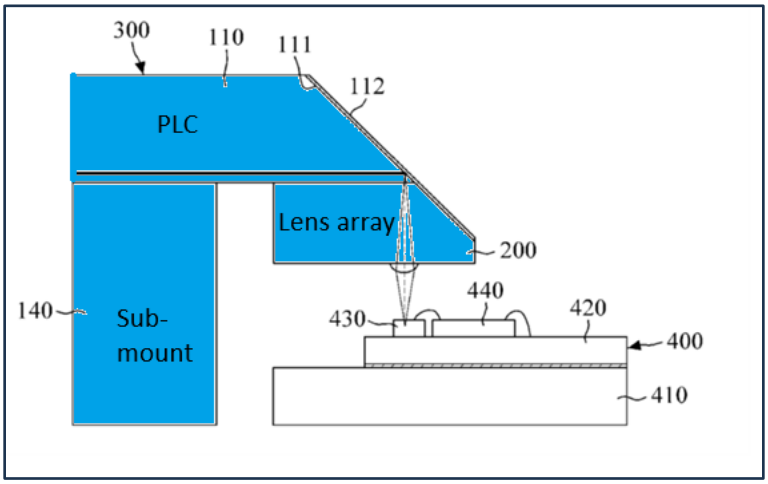

Ex. 1004, Fig. 2 (showing **AWG chip** comprising PLC 110, sub-mount 140, and lens array 200)

b. Claim term 1[a] ("a first end for coupling to an optical coupling receptacle to receive an optical signal comprising a plurality of channel wavelengths")

76. Although Lee does not expressly disclose how the AWG chip receives an optical signal, a POSITA would have understood that optical unit 300 of Lee's AWG chip necessarily has a first end that couples with an optical connector to receive an input signal.

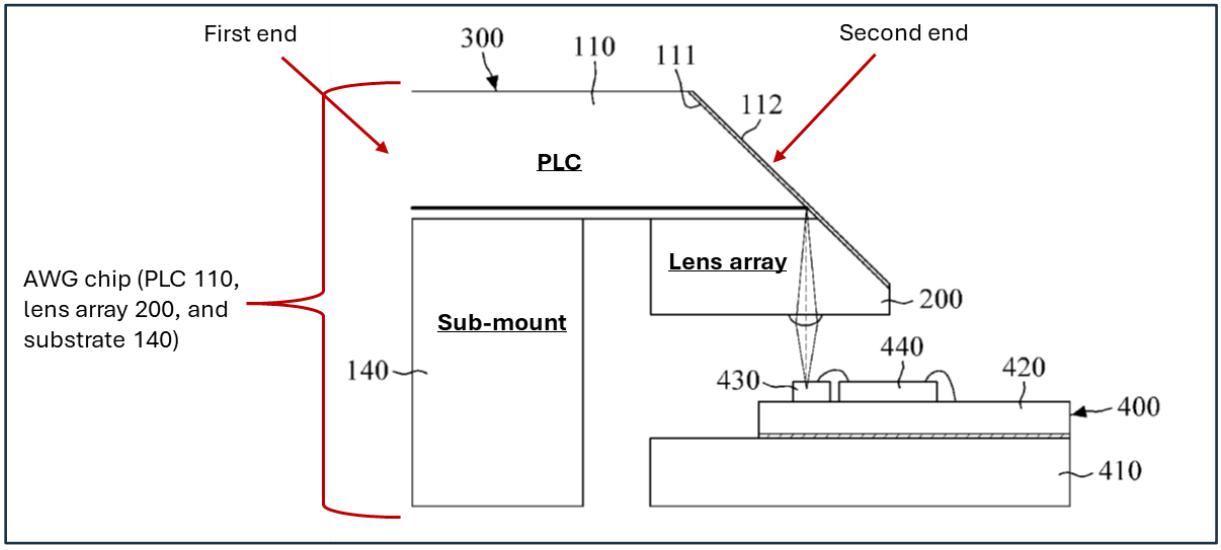

Ex. 1004, Fig. 2 (annotated to show a first end of the AWG chip that would necessarily couple with an optical connector to receive an optical signal)

77. Kim explicitly discloses an AWG chip having an optical connector 110, which "receives an optical signal inputted through a single optical fiber and then transmits the optical signal to the demultiplexer 120." Ex. 1005, ¶[0023]. Optical connector 110 of Kim has a "pigtail-shape or a receptacle-shape." *Id.*, ¶[0023], Fig. 3 (reproduced below). Kim additionally discloses that "the optical signal may be 4-channel input optical signals which have four wavelengths different from each other, respectively. The 4-channel input optical signals may be multiplexed optical signals. The 4-channel input optical signals are transmitted to the optical connector 110 through the single optical fiber." *Id.* Thus, Kim discloses an AWG demultiplexer 120 having a first end for coupling to an optical connector 110, which may be

implemented as an optical coupling receptacle, to receive an optical signal comprising a plurality of channel wavelengths. *Id.*

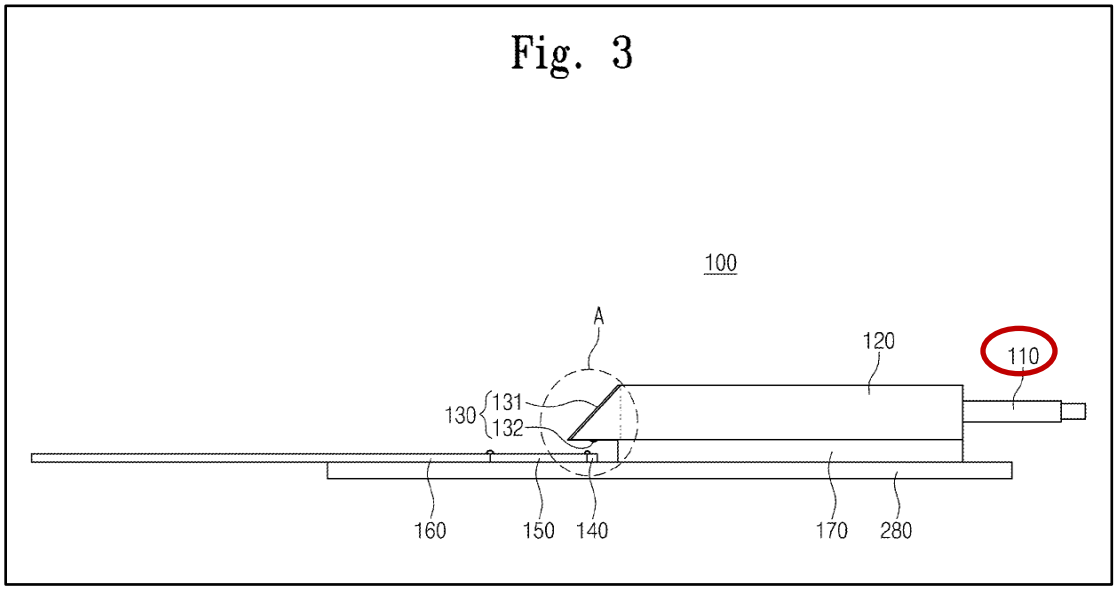

Ex. 1005, Fig. 3 (showing **optical connector 110** coupling with a first (input) end of Kim's AWG demultiplexer 120)

78. It would have been obvious to a POSITA that when the AWG chip of Lee is modified in view of Kim to have AWG demultiplexing functionality, the first end of Lee's AWG chip would have been modified (in view of Kim) to couple to an optical coupling receptacle, such as Kim's optical connector 110, to receive an optical signal comprising a plurality of channel wavelengths. Indeed, optical connectors were readily available and routinely used at the time the '116 patent application was filed, and were well understood to provide coupling between optical fibers and optical units, such as optical unit 300 of Lee. Therefore, the use of an optical connector with

Lee's AWG chip would have been routine and obvious, and not a matter of innovation.

79. More specifically, a POSITA would have considered Lee and Kim together when designing or developing an optical module, such as the one disclosed in the '116 patent, because they are both in the same field of art and each describes modules for optical communication. While Lee does not explicitly disclose a connector for providing input signals to optical unit 300, a POSITA would have readily understood that an input connector is essential for inputting incoming signals into the optical unit, and would have been motivated to use Kim's input optical connector 110 with the optical unit 300 of Lee to provide input signals to Lee's optical unit. Furthermore, a POSITA would have readily recognized the design compatibility between Lee's and Kim's optical modules and would thus have been motivated to, and reasonably expected success in, using Kim's connector 110 with Lee's optical unit 300. This is because the optical communication techniques of Lee and Kim are similar—they both use single mode optics and single mode fibers—and therefore a POSITA would have been able to combine them with little experimentation and testing. Combining Kim's AWG (along with optical connector 110) with the optical unit of Lee would have required nothing more than the application of ordinary skill and basic knowledge of optical components. Indeed, combining Lee with Kim's optical

connector 110, and modifying Lee's PLC 110 in view Kim's AWG demultiplexer 120, would have been a combination of known prior art elements according to their established functions, and the combination would have yielded the predictable result of an AWG chip with efficient and effective demultiplexing of optical signals and direct coupling of the demultiplexed outputs with photodetectors.

c. Claim term 1[b] ("a substrate")

80. The AWG chip of Lee includes a substrate, specifically, a sub-mount 140 on which optical unit 300 is mounted. Ex. 1004, Fig. 2, ¶[0042]. A POSITA would have understood that the sub-mount provides support and structure to optical unit 300, and is included within, i.e., it is a part of, Lee's AWG chip. As discussed above, Kim's AWG demultiplexer 120 is also mounted on a supporting part 170, i.e., a substrate, and AWG demultiplexer 120 and supporting part 170 together form Kim's AWG chip. Ex. 1005, ¶[0031], Fig. 1.

d. Claim term 1[c] ("a planar lightwave circuit (PLC) disposed on the substrate, the PLC coupled to the first end and configured to de-multiplex each channel wavelength of the plurality of channel wavelengths")

81. Lee discloses an optical unit 300 which includes a planar lightwave circuit (PLC) 110, which may be applied as an AWG demultiplexer. Ex. 1004, ¶¶[0009], [0033], [0036], [0038], [0043]-[0046]. PLC 110 is disposed on a substrate (sub-mount 140). *Id*., Fig. 2. It would have been obvious to a POSITA that PLC 110 of

Lee's AWG chip would have been coupled to the first end of the AWG chip to receive the input optical signal provided via an optical coupling receptacle, as taught by Kim (discussed above). A POSITA would have been motivated to directly couple the PLC to the first end to receive the input signals without any intermediate fiber or other components to reduce signal insertion loss and other disruptions. Indeed, the first (input) end of Kim's AWG demultiplexer 120 is coupled directly to optical connector 110, without any intermediate element. Accordingly, in the AWG chip of Lee in view of Kim, PLC 110 would be coupled to the first end of the chip.

82. Kim further discloses that "demultiplexer 120 is connected to one end of the optical connector 110 [at the first end] to receive the 4-channel input optical signals. The demultiplexer 120 divides the 4-channel optical signal into optical signals corresponding to channels, respectively. The demultiplexer 120 may have an array waveguide grating (AWG) structure. The demultiplexer 120 transmits the divided optical signal corresponding to each of the channels to a mirror of the optical device 130." Ex. 1005, ¶[0024].

83. Based on the teachings of Kim, a POSITA would have found it obvious to implement an AWG-based demultiplexer on PLC 110 of Lee to de-multiplex each channel wavelength of the plurality of channel wavelengths. Ex. 1004, ¶[0009]; Ex. 1005, ¶[0024].

84. More specifically, although Lee discloses that its optical unit may be used as an AWG demultiplexer, Lee does not provide additional details of the AWG structure or the demultiplexer functionality. *See* Ex. 1004, ¶[0009]. But multiplexing/demultiplexing using AWGs in WDM systems have been well known and routinely used in the industry for the past 20-30 years. Kim, however, provides explicit details about AWG demultiplexer 120. *See* Ex. 1005, ¶¶[0022]-[0025]. And a POSITA at the time the '116 patent was filed would also have known that AWGs are commonly used for optical demultiplexing in WDM systems to retrieve individual channels of different wavelengths at the receiving end of an optical communication network. AWG demultiplexers are preferred because of the minimal insertion loss and reduced cross-talk of AWG structures. Therefore, when implementing an optical transceiver module in a standard WDM system, such as the one disclosed in Lee (*see* Ex. 1004, ¶¶[0007]-[0009]), a POSITA would have found it obvious to use an AWG demultiplexer, and would have been motivated to apply the elementary AWG demultiplexer disclosed in Kim because of its simplicity and ease of implementation. A POSITA would also have reasonably expected success in combining Kim's AWG demultiplexer with the optical module of Lee for the same reasons.

e. Claim term 1[d] ("a plurality of output waveguides coupled to the PLC, each of the output waveguides

configured to receive light corresponding to an associated de-multiplexed channel wavelength launched from the PLC and provide the light along a first light path that extends towards a second end of the AWG chip")

85. Lee discloses that output light is "transmitted through a core 113 of the PLC 110[.]" Ex. 1004, ¶0045], Fig. 6. A POSITA would have known that a core of a PLC is necessarily an optical waveguide—a thin strip of material with a higher refractive index than the surrounding cladding material—to guide light through the PLC. *See, e.g.,* Ex. 1008, 9:56-58 ("The PLC waveguides have two outer cladding regions 502 and 504, and a higher index core region 503."). Indeed, a PLC is fundamentally a device that integrates optical waveguides, i.e., cores, onto a flat substrate, such as silica glass, to guide, demultiplex, or multiplex optical signals. Therefore, it would have been obvious to a POSITA that in Lee in view of Kim, the demultiplexed light from PLC 110 would have been passed along separate optical waveguides paths (i.e., cores 113) corresponding to each channel wavelength, because that is how AWG-based demultiplexing is commonly implemented to avoid cross-talk between the channels. *See also* Ex. 1004, Fig. 6 (showing each core 113 aligned with an individual lens of lens array 200 and extending along a first light path towards the second (inclined) end of the AWG chip). Moreover, other prior art references explicitly disclose such output waveguides. For example, Soldano explicitly discloses a PLC 302 having an AWG demultiplexer 404, which is

connected to four output waveguides 406 coupled with the PLC, with each output waveguide 406 receiving light corresponding to a demultiplexed channel wavelength launched from the AWG 404. Ex. 1008, Fig. 4 (annotated below), 8:61-9:12; 8:1-8. It would have been obvious to a POSITA that the PLC-based AWG demultiplexer of Lee in view of Kim would have output waveguides in cores 113 to pass the demultiplexed light horizontally along separate waveguides towards a second end of the AWG chip to mitigate signal losses and cross-talk amongst the demultiplexed channels.

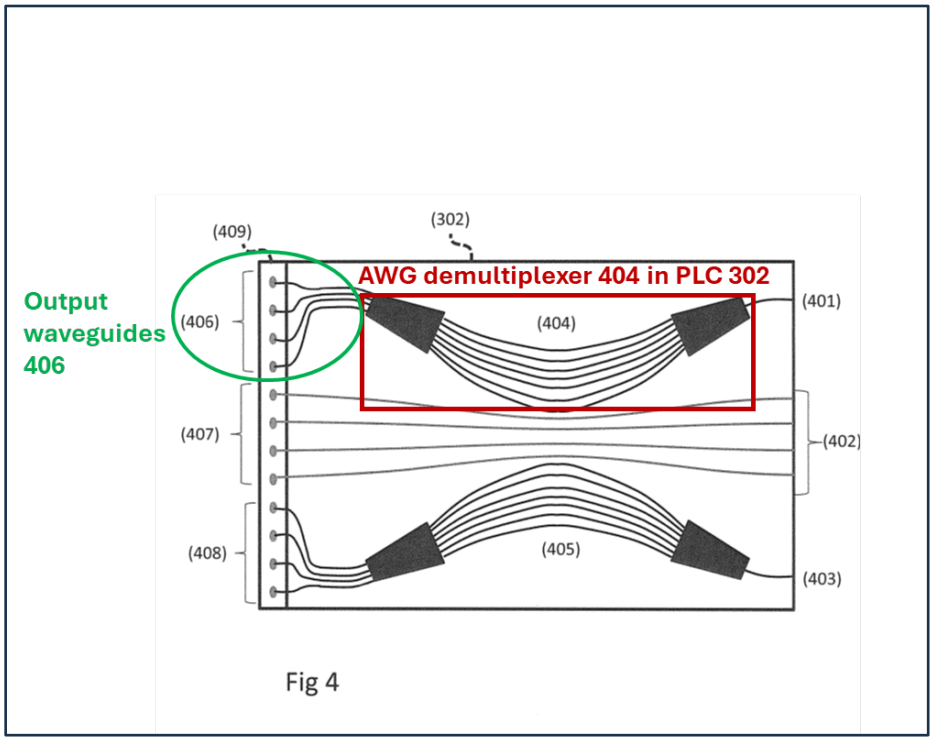

Ex. 1008, Fig. 4 (annotations added)

86. Lee additionally teaches that output light is provided along cores 113 (first light paths) that extend towards a second end of the AWG chip having an inclined surface 111. Ex. 1004, Fig. 6 (annotated below). Soldano additionally discloses that the demultiplexed light from the demultiplexer AWG 404 is provided along a first light path that extends towards a second end of the AWG chip having an angle polish 409. Ex. 1008, Fig. 3, Fig. 4 (showing output waveguides 406 extending towards a second end of PLC chip 302 having an angle polish 409), 8:1-8 ("In some embodiments the PLC provides glass waveguides, which may be formed on silicon or quartz wafers, with the AWG formed on a surface of the waveguiding structure using for example lithographic techniques. The four channels are then in four separate waveguides, each waveguide carrying one wavelength of light. **The waveguides terminate, in the embodiment of FIG. 3, at the other end of the PLC. In some embodiments the other end of the PLC includes a structure for directing, or deflecting, this light down into the silicon photonics chip 301**.") (emphasis added).

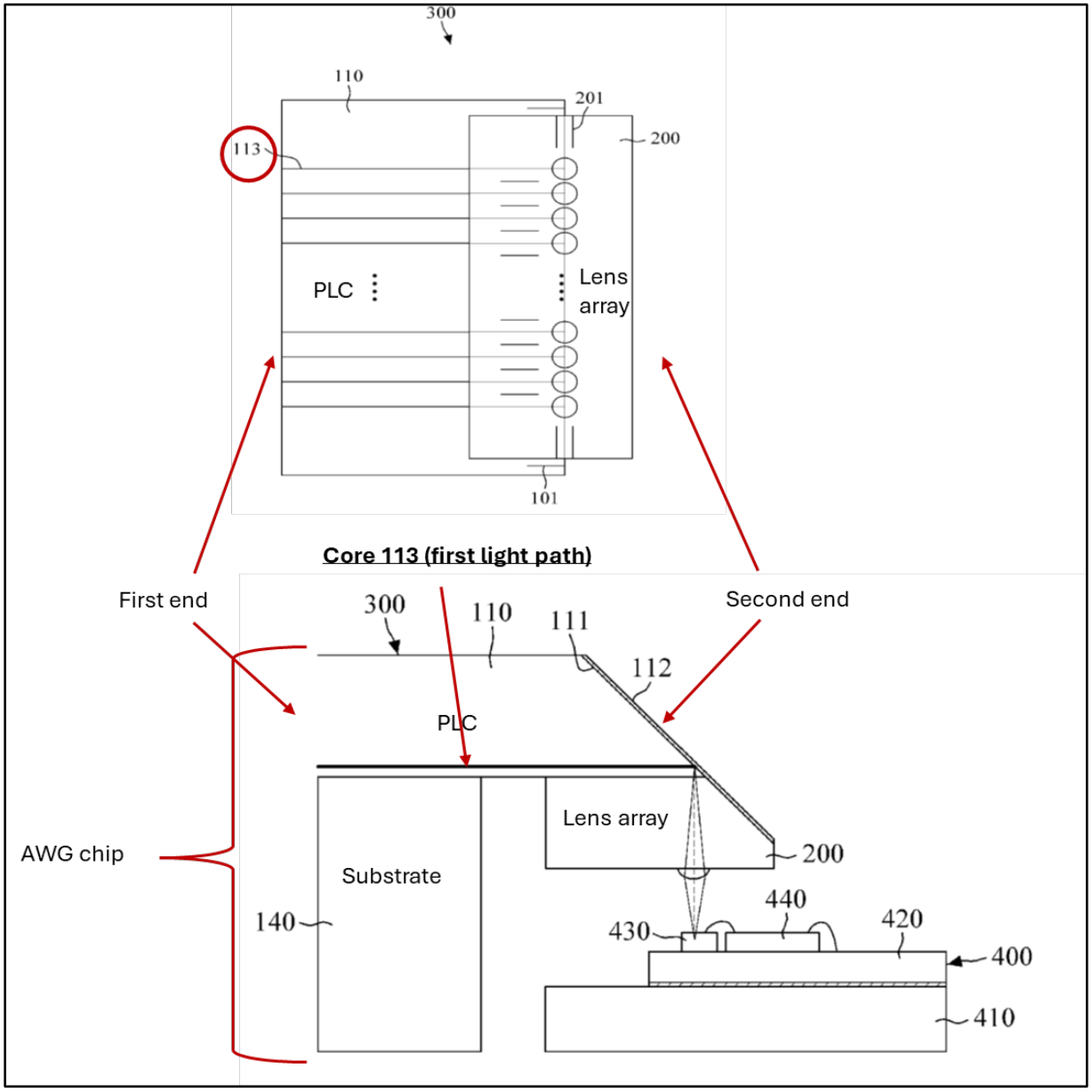

Ex. 1004, Figs. 2 and 6 (showing output light is provided along cores 113 (first light paths) that extend towards a second end of the AWG chip having an inclined surface 111) (annotation added)

87. Furthermore, Kim teaches that "demultiplexer 120 divides the 4-channel optical signal into optical signals corresponding to channels, respectively. The

demultiplexer 120 may have an array waveguide grating (AWG) structure. The demultiplexer 120 transmits the divided optical signal corresponding to each of the channels to a mirror of the optical device 130." Ex. 1005, ¶[0024]. It would have been obvious to a POSITA based on the teachings of Kim that each of Lee's output waveguide receives light corresponding to a de-multiplexed channel wavelength launched from Lee's PLC 110.

88. Thus, Lee in view of Kim discloses a PLC-based AWG demultiplexer that transmits the demultiplexed channels wavelengths through a plurality of output waveguides along a first light path that extends towards a second end of the AWG chip that has an angled/tapered finish. Ex. 1004, Fig. 2.

f. Claim term 1[e] ("a tapered region disposed at the second end of the AWG chip configured to receive light via the plurality of output waveguides and reflect the same towards an exposed output interface region of the AWG chip, wherein the exposed output interface region emits the received light from the AWG chip on the same side as the substrate without passing the received light through the substrate.")

89. Lee discloses that optical signal is provided to a second end of the AWG chip, which has a tapered region defined by an inclined surface 111 and a reflection layer 112 formed on the inclined surface. Ex. 1004, Fig. 2 (annotated below), ¶¶[0050], [0051]. As discussed above with regard to claim element 1[d], inclined surface 111 receives light via output waveguides (cores 113). Inclined surface 111 and the

reflection layer 112 reflect the received light through an exposed output interface region of the AWG chip, wherein the exposed output interface region emits the light on the same side as the substrate 140 without passing the light through the substrate. *Id.*, Fig. 2.

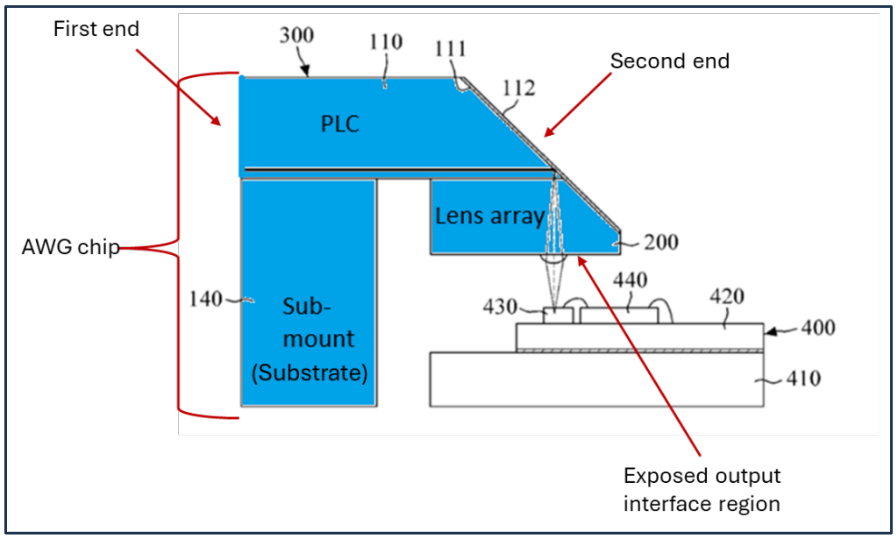

Ex. 1004, Fig. 2 (showing that the **AWG chip** reflects the demultiplexed light through an exposed output interface region without passing the light through the substrate) (annotations added)

90. Kim further teaches an "optical device 130 [which] includes a single mirror 131 and four lenses 132 for the 4-channel input optical signals. Four photodetectors 140 are provided for receiving optical signals through the four lenses 132, respectively. The photodetector 140 is spaced apart from the lens 132 by a predetermined distance. … The mirror 131 reflects the optical signal transmitted in

a horizontal direction through the demultiplexer 120, and the reflected optical signal is transmitted in a vertical direction to the lens 132. An end portion of the optical device 130 may be cut at an angle of 45 degrees and then the cut surface of the optical device 130 may be polished. Subsequently, a silica-based material may be coated on one side of the optical device 130 to form the mirror 131." Ex. 1005, ¶¶[0033]-[0034], Fig. 3. Thus, Kim additionally teaches that demultiplexed light is provided to the second end of the AWG demultiplexer 120 having a tapered region defined by an inclined surface and a mirror 131 formed on the inclined surface. *Id*. Mirror 131 reflects the demultiplexed light through an exposed output interface region of the AWG chip, wherein the exposed output interface region emits the received light on the same side as the substrate 170 without passing the received light through the substrate. *Id.*

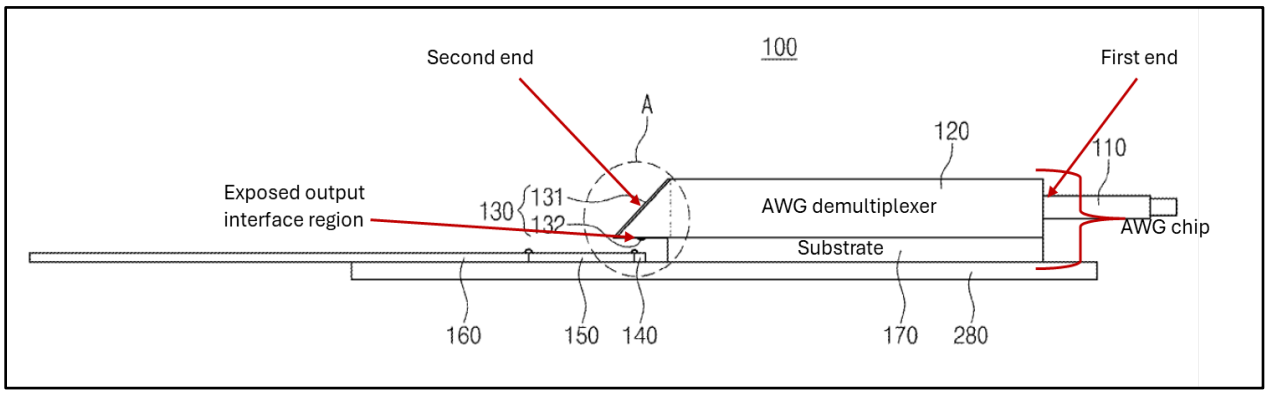

Ex. 1005, Fig. 3 (annotations added)

2. Claim 2 ("The AWG chip of claim 1, wherein the exposed output interface region is configured to pass the reflected

light received via the plurality of output waveguides out of the AWG chip along a second light path that is substantially orthogonal to the first light path.")

91. In Lee's AWG chip modified in view of Kim, the exposed output interface region is configured to reflect light received via the plurality of output waveguides (core 113) of the AWG chip along a second light path that is substantially orthogonal to the first light path, as shown in Figure 2 (annotated below).

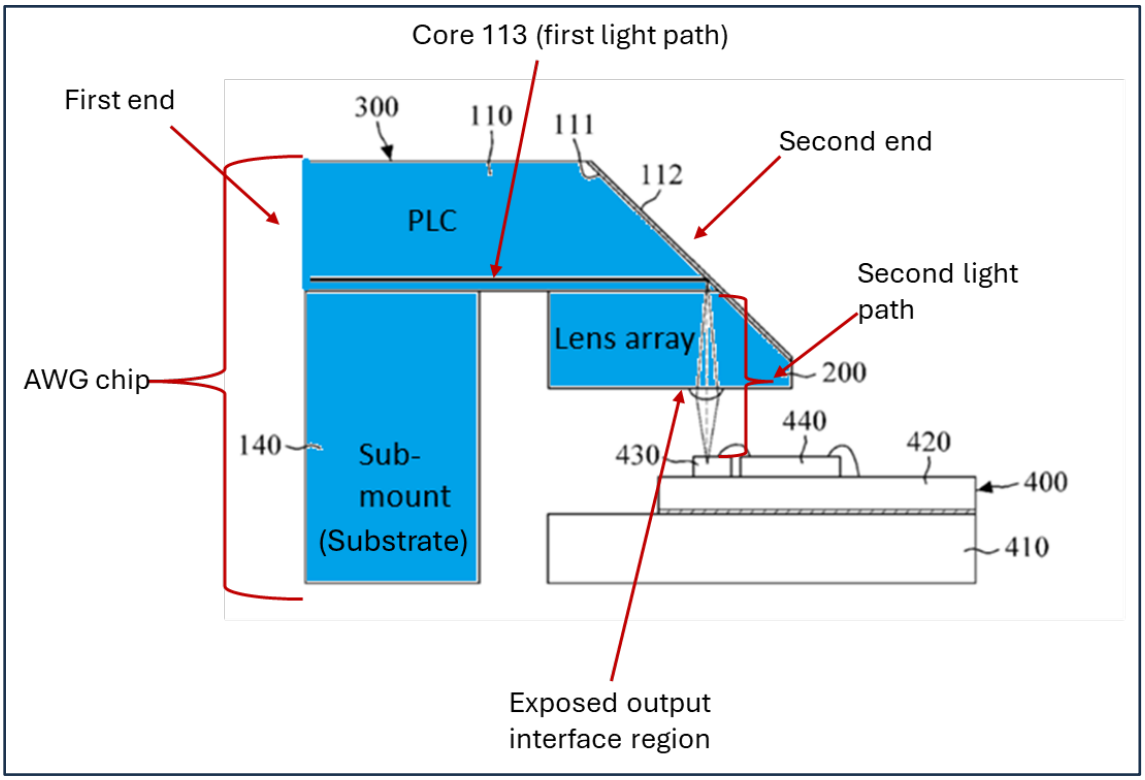

Ex. 1004, Fig. 2 (showing that the **AWG chip** reflects the demultiplexed light along a second light path that is substantially orthogonal to the first light path) (annotations added)

92. Specifically, as shown above in Lee's Figure 2, the light received horizontally through output waveguides (cores 113) is reflected out of PLC 110 and array lens 200 by inclined surface 111 along a second light path that is substantially orthogonal to the first light path defined by the output waveguides.

3. Claim 3 ("The AWG chip of claim 1, wherein the AWG chip defines a plurality of sidewalls extending longitudinally from the first end to the second end, and wherein the tapered region of the second end defines an angled surface that extends from a first sidewall of the plurality of sidewalls to a second sidewall of the plurality of sidewalls.")

93. As shown below in Figures 2 and 6 of Lee, annotated below, PLC 110 of Lee's AWG chip includes a plurality of longitudinal sidewalls that extend between the first end and the second end, wherein the tapered region defines an angled surface extending from the first sidewall to the second sidewall.

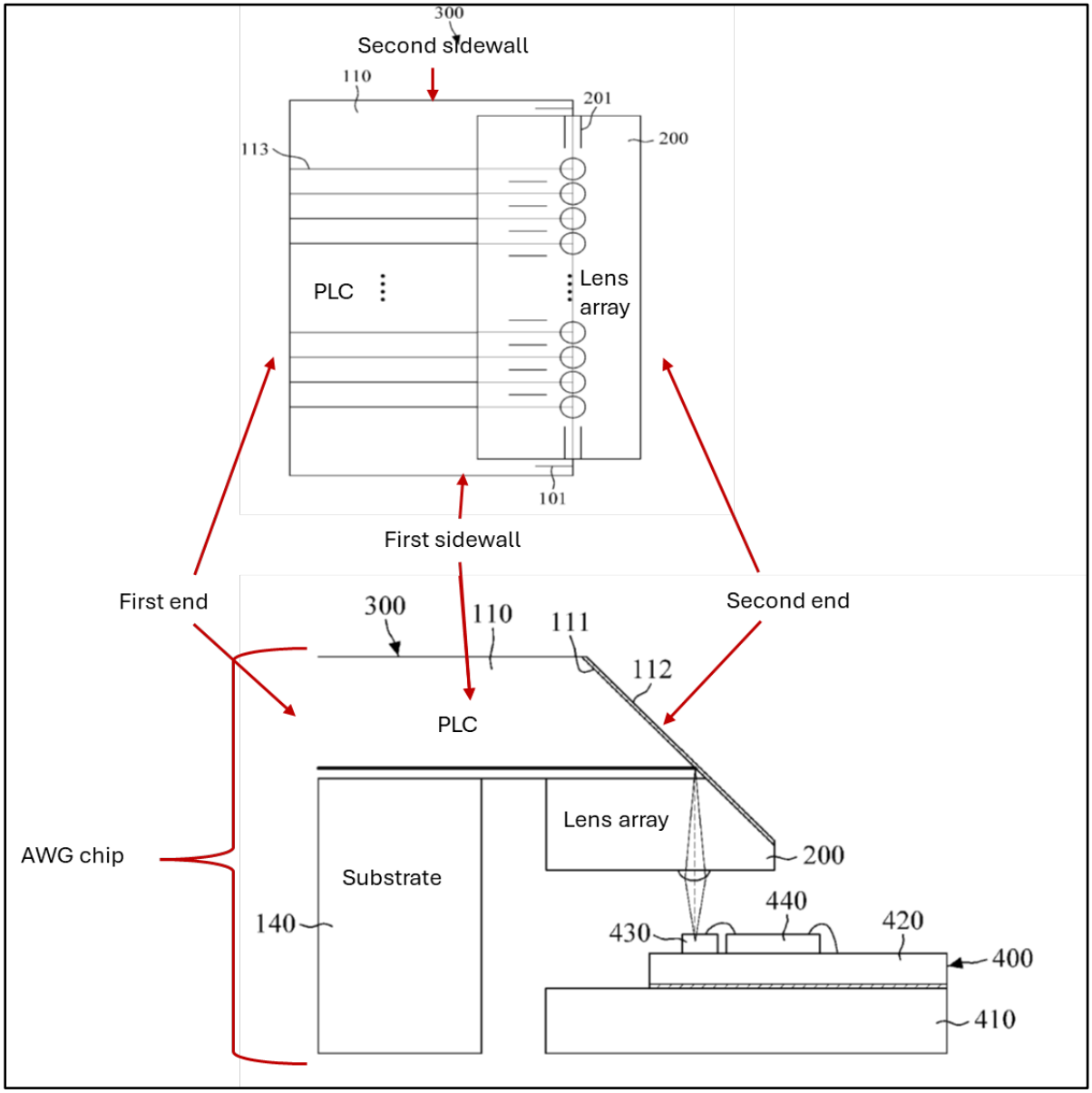

Ex. 1004, Fig. 6 (above) and Fig. 2 (below) (annotations added)

94. Figure 3 of Kim (annotated below) additionally shows that demultiplexer 120 includes a plurality of longitudinal sidewalls that extend between the first end (receiving optical connector 110) and the second end (having optical device 130), wherein the tapered region defines an angled surface extending from the first

sidewall to the second sidewall. *See also* Ex. 1005, Fig. 1 (showing a sidewall extending from the first end to the second end AWG demultiplexer 120; a POSITA would have understood that a similar sidewall necessarily exists on the other side of AWG demultiplexer 120 and the angled surface extends between the two sidewalls).

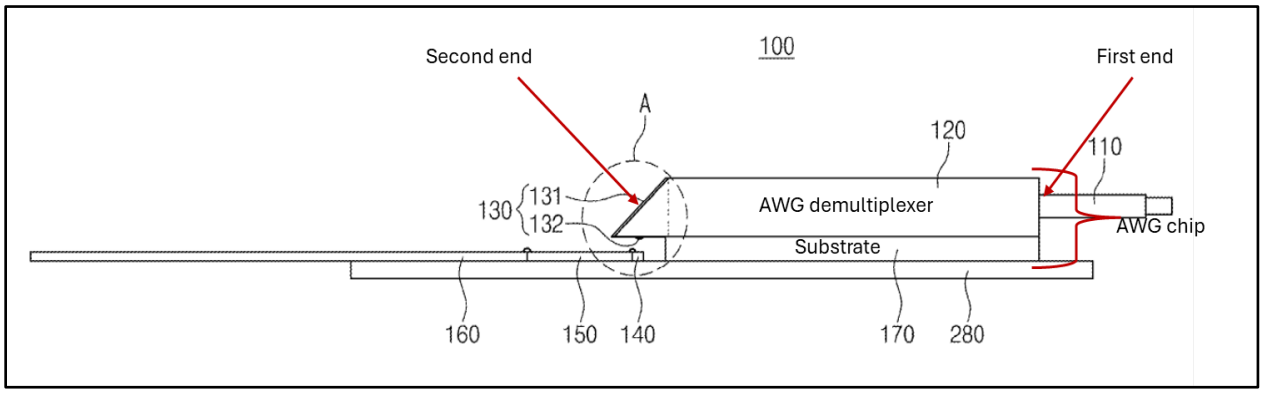

Ex. 1005, Fig. 3 (annotations added)

4. Claim 4 ("The AWG chip of claim 3, wherein the angled surface has an interior angle of about 41 to 45 degrees relative to the exposed output interface region.")

95. Both Lee and Kim disclose that the angled surface has an interior angle of about 45 degrees relative to the exposed output interface. Specifically, Lee discloses that "[t]he angle of the inclined surface 111 [i.e., the angled surface] is most desirably 45 degrees, but not limited to 45 degrees because it is difficult to accurately polish the inclined surface 111 in the actual implementation." Ex. 1004, ¶[0051]. Lee's disclosure that an interior angle of the angled/tapered surface "is most desirably 45 degrees, but not limited to 45 degrees," which falls within the recited

range of about 41 to 45 degrees, meets the recited limitation of claim 4. Moreover, a POSITA would have understood that practical fabrication tolerances (± 2–3°) were industry standard for planar lightwave circuit end-face polishing.

96. Kim also discloses an AWG demultiplexer chip having an inclined end surface of 45 degrees to effectively couple the demultiplexed light reflected by the inclined surface with corresponding photodetectors. Ex. 1005, ¶[0034]. Specifically, Kim discloses an AWG demultiplexer 120 having a tapered region defined by an inclined surface of optical device 130 (which forms an "united structure" with the AWG). *Id*., ¶¶[0025], [0033]-[0034], Fig. 3. The mirror 131 reflects the light through an exposed output interface region of the demultiplexer onto a photodetector array 140. *Id*, ¶¶[0033]-[0034]. "An end portion of the optical device 130 may be cut at an angle of 45 degrees and then the cut surface of the optical device 130 may be polished." *Id.* Thus, Kim's disclosure that "[a]n end portion of the optical device 130 [i.e., angled surface] may be cut at an angle of 45 degrees," which falls within the recited range of about 41 to 45 degrees, also meets the recited limitation of claim 4.

5. Claim 10 ("The AWG chip of claim 1, wherein the AWG chip is configured as a 1×N demultiplexer device whereby a single optical input signal is de-multiplexed into N different channel wavelengths.")

97. Although Lee does not explicitly disclose that the AWG chip is configured as a 1 x N demultiplexer device, Kim explicitly discloses optical connector 110

"receives an optical signal inputted through a single optical fiber and then transmits the optical signal to the demultiplexer 120," where "the optical signal may be 4-channel input optical signals which have four wavelengths different from each other, respectively. The 4-channel input optical signals may be multiplexed optical signals." Ex. 1005, ¶[0023]. Kim further discloses that "demultiplexer 120 is connected to one end of the optical connector 110 to receive the 4-channel input optical signals. **The demultiplexer 120 divides the 4-channel optical signal into optical signals corresponding to channels, respectively**. The demultiplexer 120 may have an array waveguide grating (AWG) structure. The demultiplexer 120 transmits the divided optical signal corresponding to each of the channels to a mirror of the optical device 130." *Id.*, ¶[0024] (emphasis added). It would have been obvious to a POSITA that the AWG chip of Lee in view Kim is a 1×N demultiplexer device, wherein a single optical input signal is de-multiplexed into N different channel wavelengths.

6. Claim 11 ("The AWG chip of claim 1, wherein the AWG chip is implemented in an AWG device package.")

98. The AWG chip of Lee in view of Kim is implemented in a hybrid optical coupling module, which serves as an AWG device package. Specifically, Lee discloses that the AWG chip is implemented in a "a hybrid optical coupling module," which includes "an optical unit configured to include an optical transmission means

that transmits an optical signal, and an array lens that is bonded at a point where the optical signal of the optical transmission means is output and focuses the output optical signal; and an electrical unit configured to receive the optical signal focused through the array lens and convert the received optical signal into an electrical signal, wherein an alignment mark is formed on the optical transmission means and the array lens so that the array lens is bonded at the point where the optical signal of the optical transmission means is output." Ex. 1004, ¶[0016]. That is, Lee's optical unit 300 (PLC 110 and lens array 200), electrical unit 400 (substrate 420, photo diodes 430, TIAs 440), and sub-mounts 140 and 410 together form Lee's "AWG device package." *See id.*, Fig. 2.

99. Similarly, Kim also discloses that its AWG demultiplexer 120 is implemented in an optical receiver module 100, i.e., an AWG device package, which includes "an optical connector 110, a demultiplexer 120, an optical device 130, a photodetector 140, a pre-amplifier 150, a printed circuit board 160, a first supporting part 170, and a second supporting part 180." Ex. 1005, ¶[0022].

B. [Ground 2] Claims 12, 13, 15, and 16 are Rendered Obvious by Ho in View of Lee and Kim and Further in View of Yoshikawa

1. Independent Claim 12

100. Ho in view of Lee and Kim and further in view of Yoshikawa renders claim 12 obvious.

a. 12[preamble] ("An optical transceiver module comprising:")

101. Ho discloses a multi-channel optical transceiver module 202 comprising a multi-channel TOSA 220, a multi-channel ROSA 230, and a dual fiber type direct link adapter 250 directly linked to the multi-channel TOSA and the multi-channel ROSA for providing optical inputs and outputs. Ex. 1006, ¶[0033] ("The compact optical transceiver module 202 generally provides an optical input and output at one end 204 and electrical input and output at another end 206. The transceiver module 202 includes a transceiver housing 210*a,* 210*b* enclosing a multi-channel TOSA 220, a multi-channel ROSA 230, and a dual fiber type direct link adapter 250 directly linked to the TOSA 220 and the ROSA 230 for providing the optical input and output.").

b. 12[a] ("a transceiver housing")

102. Ho's optical transceiver module 202 includes a transceiver housing 210*a,* 210*b*. Ex. 1006, ¶[0033], Figs. 2 and 3.

c. 12[b] ("a multi-channel receiver optical sub-assembly (ROSA) located in the transceiver housing and including an arrayed waveguide grating (AWG) chip, the AWG chip comprising:")

103. Ho discloses a multi-channel receiver optical sub-assembly (ROSA) 230 located in the transceiver housing 210*a,* 210*b*. Ex. 1006, ¶[0033]. Ho further discloses that ROSA 230 includes an AWG-type demultiplexer. *Id.*, ¶¶[0042],

[0043]. Indeed, a POSITA would have known that it is common to have an AWG demultiplexer in a ROSA to separate a received signal into individual channel wavelengths for optical-to-electrical conversion and amplification.

104. Although Ho does not provide explicit details of the AWG within the ROSA, Lee and Kim in combination disclose the details of an AWG demultiplexer chip, as discussed above in Section VIII.A. Therefore, a POSITA would have considered the teachings of Ho, Lee, and Kim together when designing or developing an optical transceiver module, such as the one disclosed in the ’116 patent. That is, when designing or developing a transceiver module having a ROSA, a POSITA would have been motivated to consider the teachings of Lee and Kim with Ho to build an efficient and effective transceiver module having a ROSA with an AWG demultiplexer.

105. Specifically, Lee discloses an optical unit 300 that is mounted on a sub-mount 140 and includes a planar lightwave circuit (PLC) 110. Ex. 1004, ¶¶[0033], [0035], [0036], [0038], [0043]-[0046]. Lee further discloses that one application of the PLC is a demultiplexer comprising an arrayed waveguide grating (AWG). *Id.*, ¶[0009]. While Lee does not explicitly disclose the AWG structure and functionality within the PLC, and instead focuses on the direct optical coupling between optical unit 300

and the photodiodes 430 on electrical unit 400, Kim discloses such an AWG demultiplexer chip.

106. Kim discloses "an optical receiver module 100 [which] includes an optical connector 110, a demultiplexer 120, an optical device 130, a photodetector 140, a pre-amplifier 150, a printed circuit board 160, a first supporting part 170, and a second supporting part 180." Ex. 1005, ¶[0022]. Kim further discloses that demultiplexer 120 may be an AWG demultiplexer. *Id.*, ¶¶[0022]-[0024]. As discussed above in Section VIII.A.1, a POSITA would have been motivated to consider the teachings of Lee and Kim together when developing an AWG chip with direct optical coupling between the AWG and respective photodiodes, and would have reasonably expected success in doing so. Lee's optical unit 300 and sub-mount 140, wherein PLC 110 is modified in view of Kim to have AWG demultiplexer structure and functionality, together form an "AWG chip."

107. Additionally, POSITA would have reasonably expected success in using the AWG chip discussed in Lee (modified in view of Kim) with the ROSA in Ho, and would have been motivated to do so, because of the simple and efficient method of direct coupling the demultiplexed light with respective photodetectors without using optical fibers or waveguides. A POSITA would have recognized that the direct coupling technique disclosed in Lee and Kim provides more efficient, reliable, and

effective coupling between the AWG and the photodetectors and minimizes manufacturing issues and concerns associated with the passive alignment requirements outlined in Ho. *See* Ex. 1006, ¶¶[0047]-[0055] (describing passive alignment between photodiodes 270 and respective demultiplexer outputs 237). At a minimum, the direct coupling technique described in Lee and Kim is a good alternative to the optical coupling mechanism described Ho, and a POSITA would have been motivated to try the mechanism of Lee and Kim to achieve desired coupling efficiency. Furthermore, a POSITA would have readily recognized the design compatibility between the optical module of Lee (modified in view of Kim) and the transceiver of Ho, and would thus have been motivated to and reasonably expected success in using them together. This is because the optical communication techniques of Lee and Ho are similar—they both use single mode optics and single mode fibers—and therefore a POSITA would have been able to combine them with little experimentation and testing. Combining Ho's transceiver module with the AWG chip of Lee and Kim would have required nothing more than the application of ordinary skill and basic knowledge of optical components. Indeed, combining Ho with Lee and Kim would have been a combination of known prior art elements according to their established functions, and the combination would have yielded the

predictable result of a transceiver with an AWG chip that provides direct optical coupling of the demultiplexed outputs with corresponding photodetectors.

d. 12[c] ("a first end for coupling to an optical coupling receptacle to receive an optical signal comprising a plurality of channel wavelengths, wherein the first end for coupling to the optical coupling receptacle includes an angled surface to reduce back reflections of an optical signal launched into the AWG chip")

108. Although Lee does not expressly disclose how the AWG chip receives an optical signal, a POSITA would have understood that Lee's AWG chip necessarily has a first end that couples with an optical connector to receive an input signal. Kim explicitly discloses an AWG chip having an optical connector 110, which "receives an optical signal inputted through a single optical fiber and then transmits the optical signal to the demultiplexer 120." Ex. 1005, ¶[0023]. Optical connector 110 of Kim has a "pigtail-shape or a receptacle-shape." *Id*., ¶[0023], Fig. 3 (reproduced below). Kim additionally discloses that "the optical signal may be 4-channel input optical signals which have four wavelengths different from each other, respectively. The 4-channel input optical signals may be multiplexed optical signals. The 4-channel input optical signals are transmitted to the optical connector 110 through the single optical fiber." *Id*. Thus, Kim discloses an AWG demultiplexer 120 having a first end for coupling to an optical connector 110, which may be implemented as an optical coupling receptacle, to receive an optical signal comprising a plurality of channel

wavelengths. *Id*. It would have been obvious to a POSITA that when the AWG chip of Lee is modified in view of Kim to have AWG demultiplexing functionality, the first end of Lee's AWG chip would have been modified (in view of Kim) to couple to an optical coupling receptacle, such as Kim's optical connector 110, to receive an optical signal comprising a plurality of channel wavelengths. Indeed, optical connectors were readily available and routinely used at the time the '116 patent application was filed, and were well understood to provide coupling between optical fibers and optical units, such as optical unit 300 of Lee. Therefore, the use of an optical connector with Lee's AWG chip would have been routine and obvious, and not a matter of innovation.

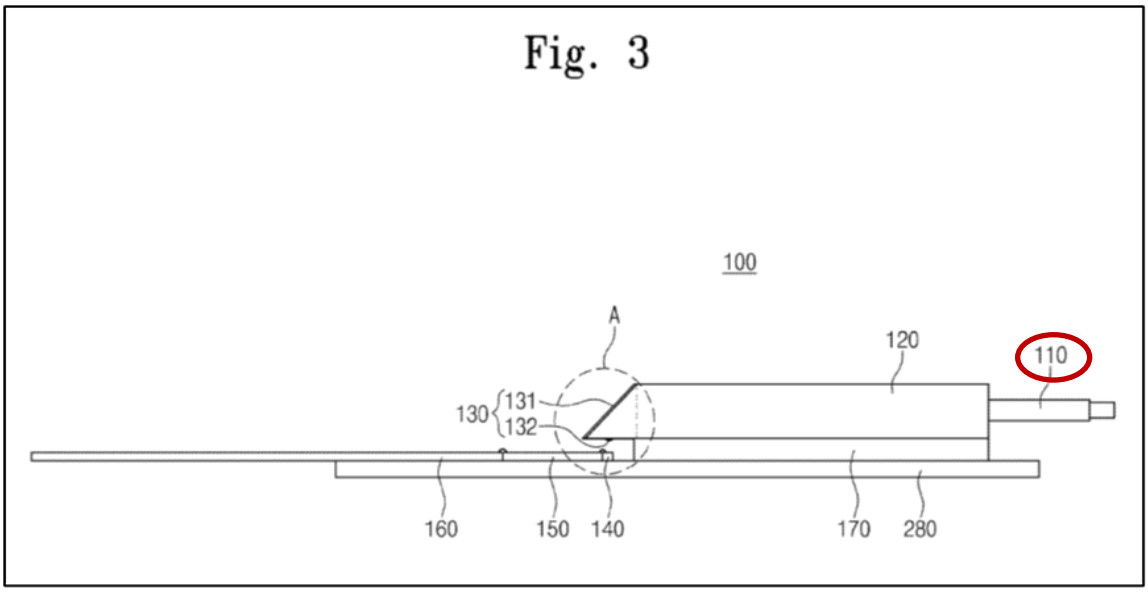

Ex. 1005, Fig. 3 (showing **optical connector 110** coupling with a first (input) end of Kim's AWG demultiplexer 120)

109. Although neither Lee nor Kim discloses that the first end of the AWG chip that couples to the optical coupling receptacle includes an angled surface, such angled junctions for reducing back reflection of incoming light was well known at the time the ’116 patent application was filed. Yoshikawa (Ex. 1009), for example, discloses an optical connector receptacle (formed by sleeve assembly 21b/22b) of a TOSA 21 or ROSA 22, wherein one end 34a of stub (ferrule) 34 that interfaces with the optical elements of the TOSA/ROSA is “processed to incline by 5 to 7 degrees to a plane perpendicular to an optical axis X of the sleeve assembly 21b [or 22b].” Ex. 1009, ¶¶[0039], [0043]. This arrangement suppresses light from being reflected by the end surface 34a in the direction parallel to the optical axis X. *Id.* A POSITA would have recognized that the same principle applies at the input of an AWG chip of a ROSA, where back-reflections tend to degrade receiver sensitivity. By 2010, angled physical contact (APC) connectors polished at ~8° ± 1° were universal in telecom optics to suppress back reflections below −60 dB. Incorporating Yoshikawa’s angled input facet into Ho’s ROSA would therefore have been a straightforward, predictable adaptation entirely consistent with industry standards, rendering claim element 12[c] obvious.

110. More specifically, it would have been obvious to a POSITA to provide an angled junction between the first end of the AWG chip of Lee and the optical

coupling receptacle of Kim—by having an inclined surface at either the first end of Lee's AWG chip and/or the junction end of Kim's optical coupling receptacle 110—to prevent back reflection of the input optical signal comprising a plurality of channel wavelengths. Indeed, angled junctions between optical components to reduce back reflections of the received optical signals were routinely used in optoelectronic components. *See e.g.,* US 5,351,327 to Lurie et al. (Ex. 1011), 1:35-41 ("The prior art further recognizes that signal transmission across a connector may be improved by imparting an angled finish to the end face of the fibers. This construction results in reduced internal reflections of the signals at the end face.") (citing other prior art references). Accordingly, a POSITA would have been motivated to provide an angled surface at the first end of the AWG chip of Lee to reduce back reflection of the optical signal received via Kim's optical coupling receptacle 110. A POSITA would also have reasonably expected success in providing an angled surface at the first end of the AWG chip of Lee because, as discussed above, such angled junctions were routinely used in optoelectronics and it would have only required the exercise of ordinary skill and knowledge of those skilled in the art.

e. 12[d] ("a planar lightwave circuit (PLC) coupled to the first end configured to de-multiplex each channel wavelength of the plurality of channel wavelengths")

111. As discussed above in 1[c] (Section VIII.A.1.d), the AWG chip of Lee in view of Kim includes a PLC that is coupled to the first end of the AWG chip and is

configured to demultiplex each channel wavelength of the plurality of channel wavelengths. In short, when implementing an optical transceiver module in a standard WDM system, such as one disclosed in Lee (*see* Ex. 1004, ¶¶[0007]-[0009]), a POSITA would have found it obvious to use a PLC-based AWG demultiplexer, and would have been motivated to apply the elementary AWG demultiplexer disclosed in Kim because of its simplicity and ease of implementation. *See* Section VIII.A.1.d, above.

f. 12[e] ("a plurality of output waveguides coupled to the PLC, each of the output waveguides configured to receive light corresponding to an associated de-multiplexed channel wavelength launched from the PLC and provide the light along a first light path that extends towards a second end of the AWG chip")

112. Claim element 12[e] is identical to claim element 1[d]. As discussed above in 1[d] (Section VIII.A.1.e), Lee in view of Kim discloses the limitation of 12[e]. In short, Lee in view of Kim discloses a PLC-based AWG demultiplexer that transmits the demultiplexed channels wavelengths through a plurality of output waveguides (cores 113) along a first light path that extends towards a second end of the AWG chip that has an angled finish. *See* Section VIII.A.1.e, above. Soldano additionally supports the teachings of Lee by disclosing a PLC 302 having an AWG demultiplexer 404, which is connected to four output waveguides 406 coupled with the PLC, with each output waveguide 406 receiving light corresponding to a

demultiplexed channel wavelength launched from the AWG 404. Ex. 1008, Fig. 4 (annotated below), 8:61-9:12; 8:1-8. It would have been obvious to a POSITA that the PLC-based AWG demultiplexer of Lee in view of Kim would have output waveguides in cores 113 to pass the demultiplexed light along separate waveguides towards a second end of the AWG chip to mitigate signal losses and cross-talk amongst the demultiplexed channels.

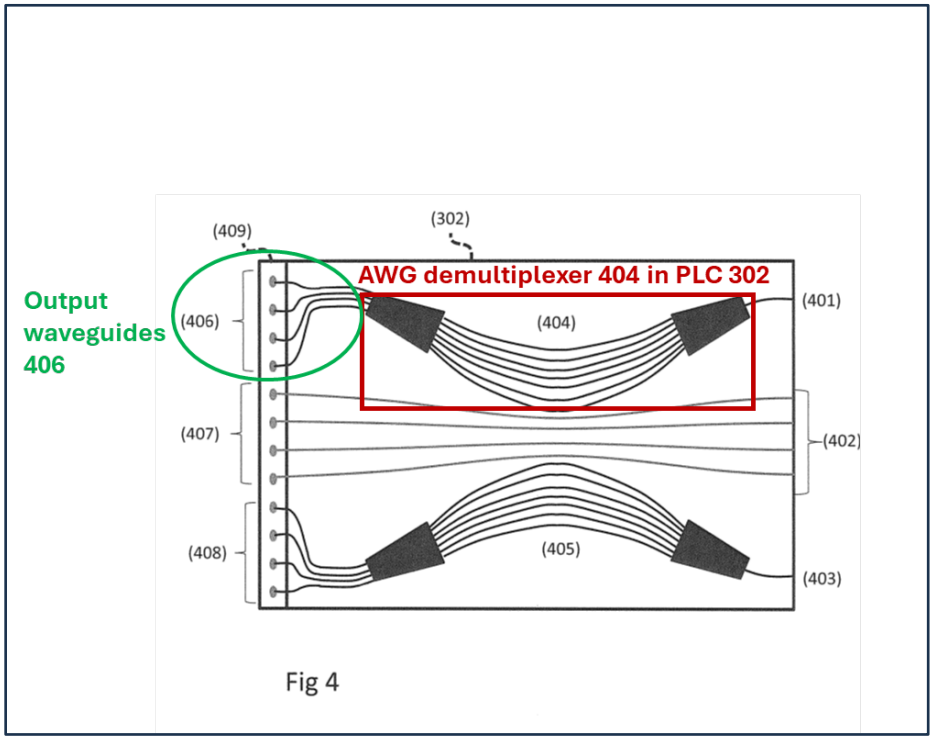

Ex. 1008, Fig. 4 (annotations added)

g. 12[f] ("a tapered region disposed at the second end of the AWG chip configured to receive light via the plurality of output waveguides and reflect the same

towards an output interface region of the AWG chip")

113. As discussed in Section VIII.A.1.f, above, Lee discloses that optical signal is provided to a second end of the AWG chip, which has a tapered region defined by an inclined surface 111 and a reflection layer 112 formed on the inclined surface. Ex. 1004, Fig. 2 (annotated below), ¶¶[0050], [0051]. As discussed above with regard to claim elements 1[d] and 12[e], inclined surface 111 receives light via output waveguides (cores 113). Inclined surface 111 and the reflection layer 112 reflect the received light through an output interface region of the AWG chip. *Id.*, Fig. 2.

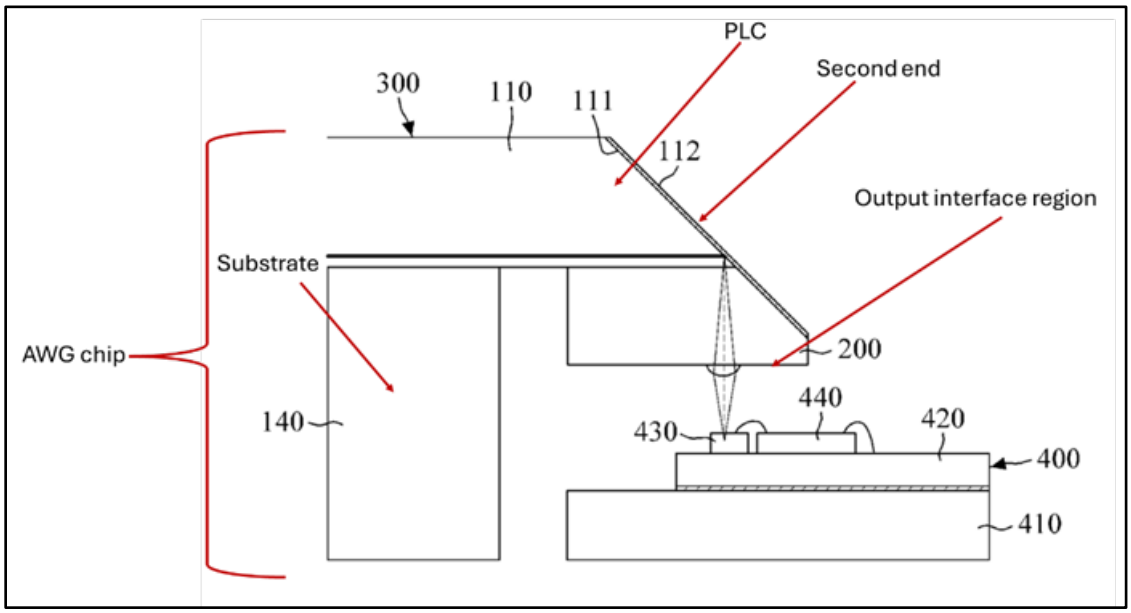

Ex. 1004, Fig. 2 (annotations added).

114. Kim additionally teaches that demultiplexed light is provided to the second end of the AWG demultiplexer 120 having a tapered region defined by an inclined surface and a mirror 131 formed on the inclined surface. Ex. 1005, ¶¶[0033]-[0034], Fig. 3. Mirror 131 reflects the demultiplexed light through an output interface region of the AWG chip. *Id.*; *see also* Section VIII.A.1.f, above.

h. 12[g] ("an array of photodetector devices disposed adjacent to the output interface region of the AWG chip")

115. Lee in view of Kim discloses an array of photodetector devices disposed adjacent to the output interface region of the AWG chip. Specifically, Lee discloses an array of photodiodes (PD) 430, which are a type of photodetector, adjacent to the output interface region of the AWG chip to convert the optical signals to electrical signals. Ex. 1004, Figs. 2, 8.

116. Kim also discloses an array of photodetectors 140 adjacent to the output interface region of the AWG demultiplexer 120. Ex. 1005, Figs. 2 and 3. Each photodetector 140 "receives the optical signal of each channel from the optical device 130. The photodetector 140 converts the received optical signal of each channel into an electrical signal. The photodetector 140 may be a surface-illuminated type photodetector or a waveguide type photodetector. Additionally, 4 photodetectors 140 are provided for the 4-channel input optical signals. The 4 photodetectors 140 may be fabricated in an array form." *Id.*, ¶[0028].

i. 12[h] ("a multi-channel transmitter optical assembly (TOSA) including at least one laser package located in the transceiver housing for transmitting optical signals at different channel wavelengths.")

117. Ho's optical transceiver module 202 includes a multi-channel TOSA 220 within the transceiver housing 210*a*, 210*b*. Ex. 1006, ¶[0033]. TOSA 220 includes an array of lasers coupled to an AWG multiplexer 225. *Id.*, ¶[0037]. The array of lasers generate and transmit optical signals at different channel wavelengths. *Id.*, ¶[0028] ("One embodiment of the multi-channel TOSA 120 includes an array of lasers 122, such as laser diodes, which may be modulated by respective RF data signals (TX_D1 to TX_Dm) to generate the respective optical signals. The lasers 122 may be modulated using various modulation techniques including external modulation and direct modulation."), ¶[0029]. Ho also incorporates by reference U.S. Application No. 13/708,569 (U.S. Patent Pub. No. 2014/0161457) (hereinafter Ex. 1010), which describes a similar TOSA 220 in more detail. *Id.*, ¶[0037]. As discussed in Ex. 1010 at ¶¶[0034]-[0035], TOSA 220 includes an array of lasers 226-1 to 226-n coupled to AWG 225, and "[e]ach laser 226-1 may be provided as a laser package including, but not limited to, a laser diode chip mounted on a laser mounting structure. The laser package may also include optical components, such as a lens for optically coupling the laser light into a respective one of the optical fibers, and/or optoelectronic components, such as a monitor photodiode." It would have been

obvious to a POSITA that the lasers of TOSA 220 in Ho generate and transmit optical signals at different channel wavelengths. *See, e.g.,* Ex. 1006, ¶[0058] ("The TOSA is configured to transmit a wavelength division multiplexed (WDM) optical signal on multiple channel wavelengths."). Indeed, it is common knowledge to those skilled in the art that TOSAs include lasers modulated to transmit optical signals at different channel wavelengths.

2. Claim 13 ("The optical transceiver module of claim 12, wherein the output interface region of the AWG chip is an exposed region adjacent an air gap, and wherein the air gap separates the output interface region of the AWG chip and the array of detector devices.")

118. Lee discloses that the output interface region of the AWG chip is an exposed region adjacent an air gap that separates the output interface region and the array of PDs 430 (photodetectors). Ex. 1004, Fig. 2 (annotated below).

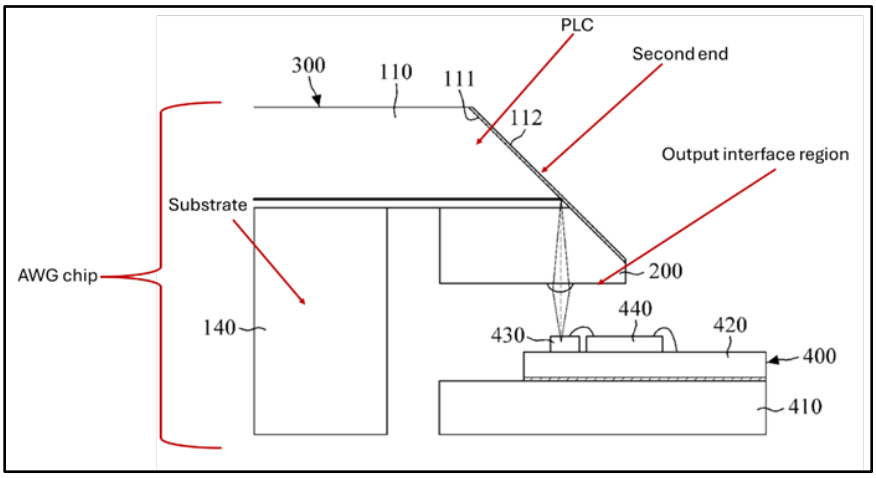

Ex. 1004, Fig. 2 (showing an air gap separating the output interface region and photodetectors 430) (annotations added)

119. Kim also discloses that the output interface region of AWG demultiplexer 120 is an exposed region adjacent an air gap that separates the output interface region and the array of photodetectors 140. Ex. 1005, Fig. 3.

3. Claim 15 ("The optical transceiver module of claim 12, wherein the AWG chip defines a plurality of sidewalls extending longitudinally from the first end to the second end, and wherein the tapered region of the second end defines an angled surface that extends from a first sidewall of the plurality of sidewalls to a second sidewall of the plurality of sidewalls.")

120. Claim 15 is identical to claim 3. As discussed above with regard to claim 3 (Section VIII.A.3), Lee and Kim disclose the limitation of claim 15. Specifically, Lee discloses an AWG chip that includes a plurality of longitudinal sidewalls extending between the first end and the second end, and wherein the tapered region of the second end defines an angled surface extending from the first sidewall to the second sidewall. *See* Section VIII.A.3, above. Figures 1 and 3 of Kim additionally shows that demultiplexer 120 includes a plurality of longitudinal sidewalls that extend between the first end (receiving optical connector 110) and the second end (having optical device 130), wherein the tapered region defines an angled surface extending from the first sidewall to the second sidewall. *See id.*

4. Claim 16 ("The optical transceiver module of claim 15, wherein the angled surface has an interior angle of about 41 to 45 degrees relative to the output interface region.")

121. Claim 16 is identical to claim 4 (except claim 4 requires the output interface region to be exposed). As discussed above with regard to claim 4 (Section VIII.A.4), Lee discloses that "[t]he angle of the inclined surface 111 [i.e., the angled surface] is most desirably 45 degrees, but not limited to 45 degrees because it is difficult to accurately polish the inclined surface 111 in the actual implementation." Ex. 1004, ¶[0051]. Lee's disclosure that an interior angle of the angled/tapered surface "is most desirably 45 degrees, but not limited to 45 degrees," which falls within the recited range of about 41 to 45 degrees, meets the recited limitation of claim 4.

122. Kim also discloses an AWG demultiplexer chip having an inclined end surface of 45 degrees to effectively couple the demultiplexed light reflected by the inclined surface with corresponding photodetectors. Ex. 1005, ¶[0034]. Moreover, a POSITA would have known to design an AWG chip with a tapered surface having an interior angle in the range of about 41-45 degrees, based on the teachings of Lee and Kim and through routine experimentation and design considerations, to optimize the direct coupling of demultiplexed light with respective photodetectors. In other words, designing Lee's AWG chip to have a angled surface with an interior angle of about 41-45 degrees would have been obvious to a POSITA. *See* Section VIII.A.4, above.

IX. BERNASCONI-BASED GROUNDS

A. [Ground 3] Claims 1-4, 10, and 11 are Rendered Obvious by Bernasconi in View of Soldano

1. Independent Claim 1

123. Bernasconi in view of Soldano renders claim 1 obvious.

a. 1[preamble] ("An arrayed waveguide grating (AWG) chip comprising:")

124. Bernasconi discloses an arrayed waveguide grating (AWG) chip. Specifically, Bernasconi discloses a "10-channel parallel transmitter and receiver optical sub-assemblies (TOSA & ROSA) with an aggregated capacity of 107 Gbps. [The TOSA and ROSA] consist of arrays of DFB lasers and avalanche photodiodes (APD) combined with silica arrayed waveguide gratings as multi-demultiplexers." Ex. 1007, pg. 1 col. 1; *see also id.*, pg. 2 col. 1 (discussing that the ROSA comprises "[f]ree-space collimating optics" that "feed the incoming stream into a silica AWG demultiplexer that separates the 100-GHz spaced channels.").

125. Bernasconi further discloses that "[t]he APDs [avalance photodiodes], the linear TIAs [transimpedance amplifiers] and all the passive electronic components are assembled on the base ceramic substrate." Bernasconi, pg. 2 col. 1, Fig. 2(b) (showing that the AWG demultiplexer, APD, and TIA are mounted on a ceramic base).

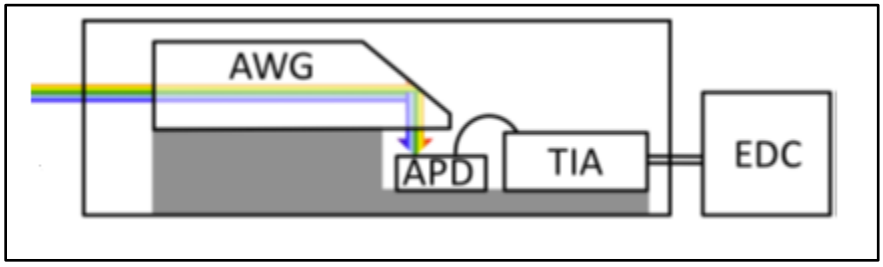

Ex. 1007, Fig. 2(b) (showing sideview of ROSA schematic)

126. The AWG demultiplexer and the ceramic base on which the AWG, APD array and TIA array are mounted together form an "AWG chip," wherein the ceramic base provides support, structure, and thermal management to the AWG demultiplexer.

127. Soldano also discloses a photonic integrated circuit chip having a silicon photonics substrate 301 and a planar lightwave circuit (PLC) 302, which includes a demultiplexer comprising an arrayed waveguide grating (AWG) structure. Ex. 1008, 7:24-8:28, Figs. 3-5. The photonic integrated chip comprising substrate 301 and PLC 302 is an "AWG chip" because it includes AWG functionality and structure.

128. Indeed, Bernasconi and Soldano are both single mode solutions, i.e., using single mode fibers/waveguides. AWGs are also single mode optics chips. As such, a POSITA would have readily known to consider the teachings of Bernasconi and Soldano together given their design compatibility and similar teachings.

b. Claim term 1[a] ("a first end for coupling to an optical coupling receptacle to receive an optical signal comprising a plurality of channel wavelengths")

129. Bernasconi's AWG chip has a first end that receives an incoming optical signal through "[f]ree-space collimating optics" and feeds it into the AWG demultiplexer. Bernasconi, pg. 2 col. 1, Fig. 2. Bernasconi also discloses that the incoming optical signal has 10-channels that are spaced apart by 100-GHz. *Id.*, pg. 1 col. 1, pg. 2 col. 2, Fig. 2(a) (showing that the ROSA demultiplexes the multi-wavelength input optical signal into 10 separate output channels). A POSITA would have understood that in place of free-space collimating optics, the multi-wavelength optical signal may be inputted through an optical connector that couples with the first end of the AWG chip, as taught by Soldano, to provide a more reliable and secure physical link and to minimize signal losses caused by, for example, misalignment of the free-space optics.

130. Indeed, Bernasconi and Soldano are in the same field of optoelectronics, specifically photonic integrated circuits having AWG multiplexers and demultiplexers. Ex. 1007, pg. 1 col. 1; Ex. 1008, Ex. 2:64-3:5, 3:17-25. Therefore, a POSITA would have considered the teachings of Bernasconi and Soldano together when designing or developing an AWG chip, such as the one disclosed in the '116 patent, to directly optically couple an AWG demultiplexer chip with a photodetector array for optical-to-electrical conversion. Accordingly, a POSITA would have been

motivated to use an optical connector having a receptacle as taught by Soldano, instead of using free-space collimating optics as taught by Bernasconi, to reduce or mitigate signal losses caused by misalignment, vibrations, and pointing inaccuracies of free-space optical connections when transmitting the multi-wavelength input signal to the AWG chip.

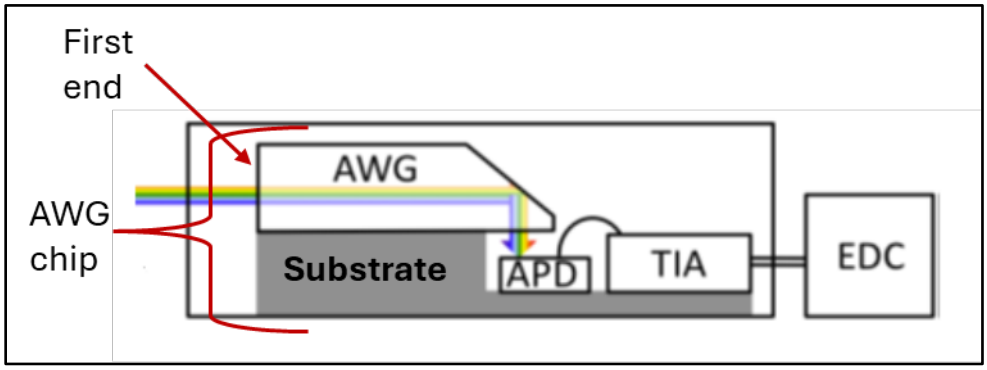

Ex. 1007, Fig. 2(b) (annotations added)

131. For example, the AWG chip of Soldano has a first end that couples to an optical coupling receptacle 303 that receives an optical signal comprising a plurality of channel wavelengths through a fiber 306. Ex. 1008, 7:29-32 ("In various embodiments, on the receive side, multiwavelength light, with many modulated channels, enters from a single fiber and is demultiplexed by a planar lightwave circuit (PLC)."), 7:62-65 ("In the embodiment of FIG. 3, multi-wavelength light, for example carrying four modulated wavelengths from a distant source, enters through fiber 306. This fiber is glued into a capillary 303 that is aligned to the PLC 302."), Fig. 3 (shown below).

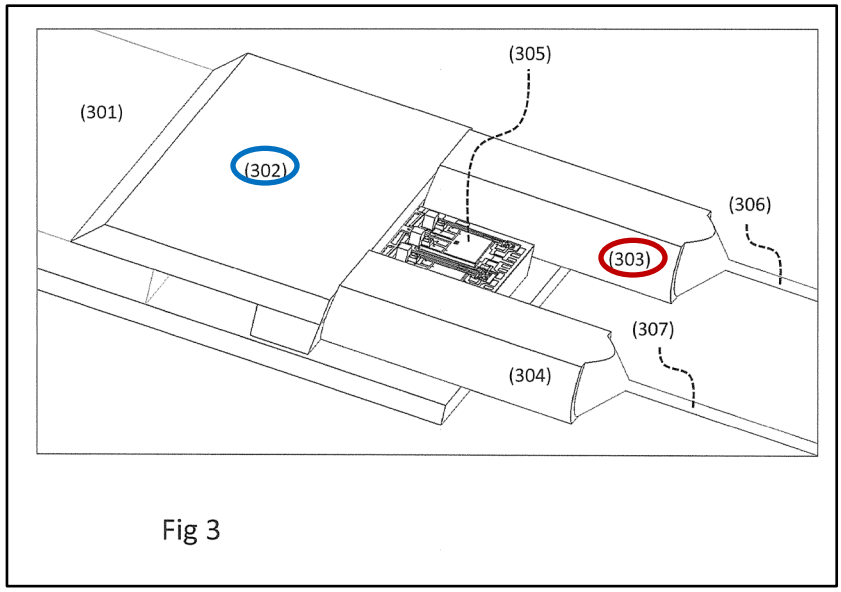

Ex. 1008, Fig. 3 (showing that a first end of **PLC 302** is coupled to an **optical coupling receptacle 303** to receive multiwavelength optical signal through fiber 306)

132. It would have been obvious to a POSITA to modify the first end of the AWG chip of Bernasconi to couple to an optical coupling receptacle, such as the optical coupling receptacle 303 of Soldano, to receive a multi-wavelength input optical signal from a fiber with minimal losses.

c. Claim term 1[b] ("a substrate")

133. The AWG chip of Bernasconi includes a substrate, specifically, a ceramic base on which the AWG, APDs and TIAs are mounted. Ex. 1007, Fig. 2(b), pg. 2 col. 1.

134. As discussed above, the AWG chip of Soldano also includes a substrate, specifically, a silicon photonics chip 301. Ex. 1008, 7:29-32, 8:8-10, Figs. 3 and 5.

d. Claim term 1[c] ("a planar lightwave circuit (PLC) disposed on the substrate, the PLC coupled to the first end and configured to de-multiplex each channel wavelength of the plurality of channel wavelengths")

135. The AWG chip of Bernasconi includes a planar lightwave circuit (PLC) disposed on the substrate (ceramic base), and wherein the PLC is coupled to the first end of the AWG chip and configured to demultiplex each channel wavelength of the plurality of channel wavelengths.

136. Specifically, Bernasconi discloses that its AWG demultiplexer is a PLC, which is mounted on the ceramic substrate, and is coupled to the first end of the AWG chip. Ex. 1007, pg. 2 col. 1 ("hybrid integration allows for the use of low-loss, low-crosstalk, PLC-based demultiplexers combined with high-sensitivity III-V–based APDs."); *see also id.*, pg. 2 col. 1 ("Free-space collimating optics (not shown) feed the incoming stream into a silica AWG demultiplexer that separates the 100-GHz spaced channels."), Fig. 2(a) (noting that the AWG demultiplexer is a "Silica PLC"). Bernasconi further discloses that the PLC-based AWG demultiplexer is configured to demultiplex the incoming optical signal carrying 10 modulated channel wavelengths into individual channels. Bernasconi, pg. 2 col. 2, Fig. 2(a)

(showing that the AWG demultiplexes the multi-wavelength input signal into 10 separate output channels).

137. Soldano also discloses a PLC 302 disposed on substrate 301. Ex. 1008, Fig. 3, 8:8-10. The PLC is coupled to the optical coupling receptacle 303 at the first end, as shown in Figure 3. The PLC is configured to demultiplex the multiwavelength light carrying many modulated channel wavelengths into individual channels. *Id.*, 7:62-8:1 ("In the embodiment of FIG. 3, multi-wavelength light, for example carrying four modulated wavelengths from a distant source, enters through fiber 306. This fiber is glued into a capillary 303 that is aligned to the PLC 302. This light is then demultiplexed into four individual channels in the PLC 302, for example using a conventional wavelength sensitive structure such as an AWG.").

e. Claim term 1[d] ("a plurality of output waveguides coupled to the PLC, each of the output waveguides configured to receive light corresponding to an associated de-multiplexed channel wavelength launched from the PLC and provide the light along a first light path that extends towards a second end of the AWG chip")

138. As discussed above, Bernasconi discloses a PLC-based demultiplexer that transmits the demultiplexed channels along a first light path that extends towards a second end of the AWG chip that has an angled/tapered finish. Ex. 1007, Fig. 2(b).

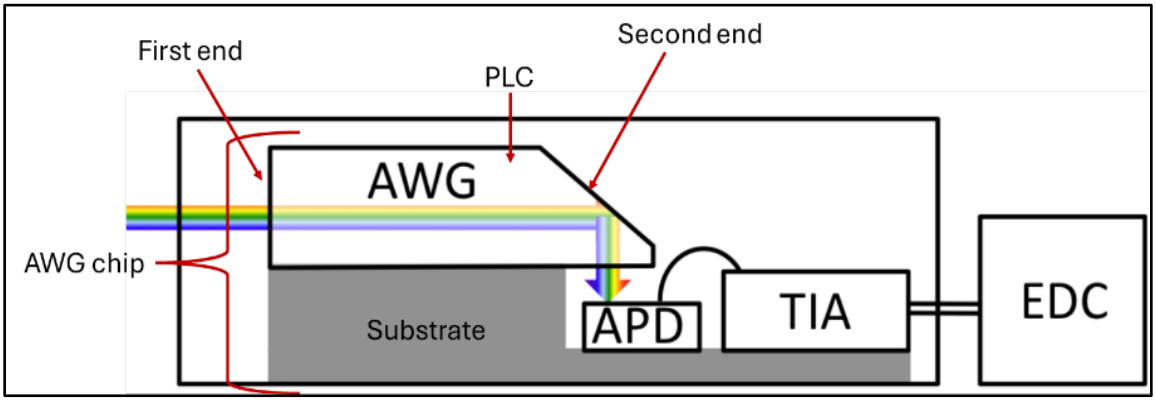

Ex. 1007, Fig. 2(b) (annotations added)

139. Although Bernasconi does not explicitly disclose a plurality of output waveguides coupled to the PLC to receive demultiplexed light launched from the PLC, a POSITA would have understood that the demultiplexed light from the AWG would have been passed along output waveguides corresponding to each channel wavelength, because that is how AWG-based demultiplexing is commonly implemented to avoid cross-talk between the channels. Moreover, other prior art references explicitly disclose such output waveguides. For example, Soldano explicitly discloses that PLC 302 has a demultiplexer AWG 404, which is connected to four output waveguides 406 coupled with the PLC, with each output waveguide 406 receiving light corresponding to a demultiplexed channel wavelength launched from the AWG 404. Ex. 1008, Fig. 4 (annotated below), 8:61-9:12; 8:1-8.

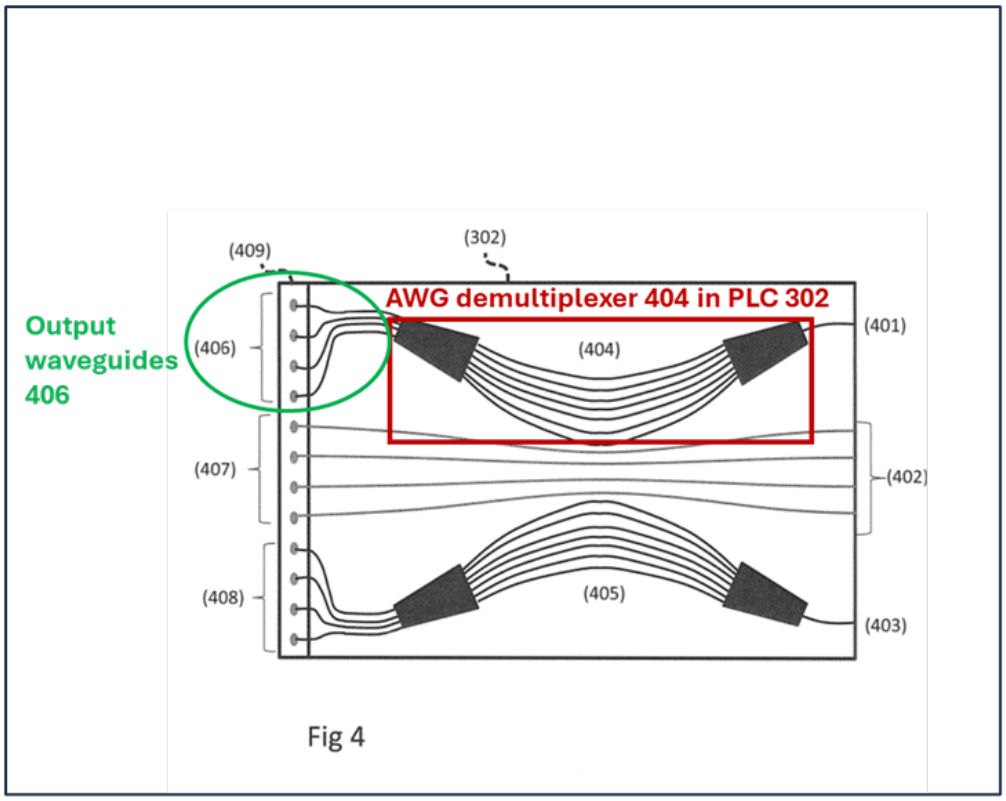

Ex. 1008, Fig. 4 (annotations added)

140. Soldano additionally discloses that the demultiplexed light from the demultiplexer AWG 404 is provided along a first light path that extends towards a second end of the AWG chip having an angle polish 409. *Id.*, Fig. 3, Fig. 4 (showing input waveguide 401 at a first end of PLC 302 and output waveguides 406 extending towards a second end of PLC chip 302 having an angle polish 409), 8:1-8 ("In some embodiments the PLC provides glass waveguides, which may be formed on silicon or quartz wafers, with the AWG formed on a surface of the waveguiding structure using for example lithographic techniques. The four channels are then in four separate waveguides, each waveguide carrying one wavelength of light. **The**

waveguides terminate, in the embodiment of FIG. 3, at the other end of the PLC. In some embodiments the other end of the PLC includes a structure for directing, or deflecting, this light down into the silicon photonics chip 301.") (emphasis added).

141. It would have been obvious to a POSITA to implement output waveguides in the PLC-based AWG demultiplexer of Bernasconi in view of Soldano to pass the demultiplexed light along separate waveguides towards a second end of the AWG chip to mitigate signal losses and cross-talk amongst the demultiplexed channels.

142. A POSITA would also have reasonably expected success in combining Bernasconi with the teachings of Soldano and it would have required nothing more than the application of ordinary skill and basic knowledge of optical components. Indeed, combining Bernasconi with an input coupling receptacle (claim term 1[a]) and output waveguides (claim term 1[d]), which are both disclosed in Soldano, would have been a combination of known prior art elements according to their established functions, and the combination would have yielded the predictable result of an AWG chip with efficient and effective direct coupling of the demultiplexer output with photodetectors.

f. Claim term 1[e] ("a tapered region disposed at the second end of the AWG chip configured to receive light via the plurality of output waveguides and reflect the same towards an exposed output interface

region of the AWG chip, wherein the exposed output interface region emits the received light from the AWG chip on the same side as the substrate without passing the received light through the substrate.")

143. The AWG chip of Bernasconi includes a tapered region disposed at the second end of the AWG chip, as shown in Bernasconi's Figure 2(b), below. The second end of the AWG chip is configured to receive light via a plurality of output waveguides in view of Soldano, as discussed with reference to claim term 1(d), above. The light received by the second end is reflected towards an exposed output interface region of the AWG chip, and wherein the exposed output interface region emits the received light from the AWG chip on the same side as the substrate without passing the received light through the substrate. Ex. 1007, Fig. 2(b) (showing that demultiplexed light from the AWG is reflected down by the turning mirror at the second end into an array of APDs through an exposed output interface region of the AWG chip, and wherein the output interface region emits the received light to the APD on the same side as the ceramic substrate without passing the light through the substrate); *see also id.*, pg. 2 col. 1 ("An external turning mirror redirects the light onto an array of APDs. By careful control of the design of the optical path from the AWG facet to the APDs, we achieve high coupling without having to add any intermediate lenses.").

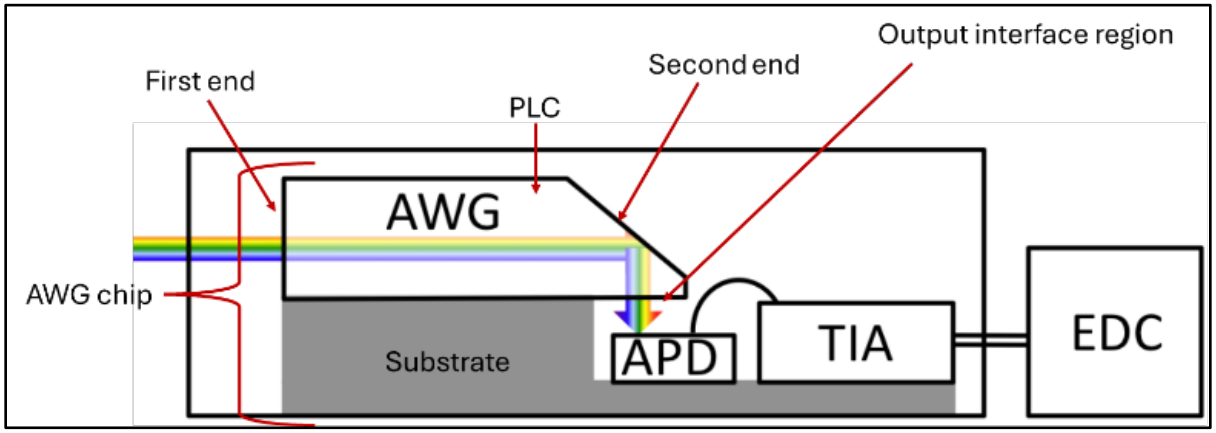

Ex. 1007, Fig. 2(b) (annotations added)

144. Soldano additionally discloses that demultiplexed light from PLC 302 is provided along output waveguides 406 to a second end of the AWG chip having a tapered region defined by an angle polish 409. Ex. 1008, Fig. 3, Fig. 4 (showing input waveguide 401 at a first end of PLC 302 and demultiplexer output waveguides 406 extending towards a second end of PLC 302 chip having an angle polish 409), 8:1-8, 9:15-37. Soldano further teaches that light from output waveguides 406 is reflected down by angle polish 409 through an output interface region of PLC 302 onto a grating coupler 505, which is a periodic grating etched onto the surface of waveguide 506 provided in substrate 301. *Id.*, Fig. 5, 9:28-37, 9:58-10:9.

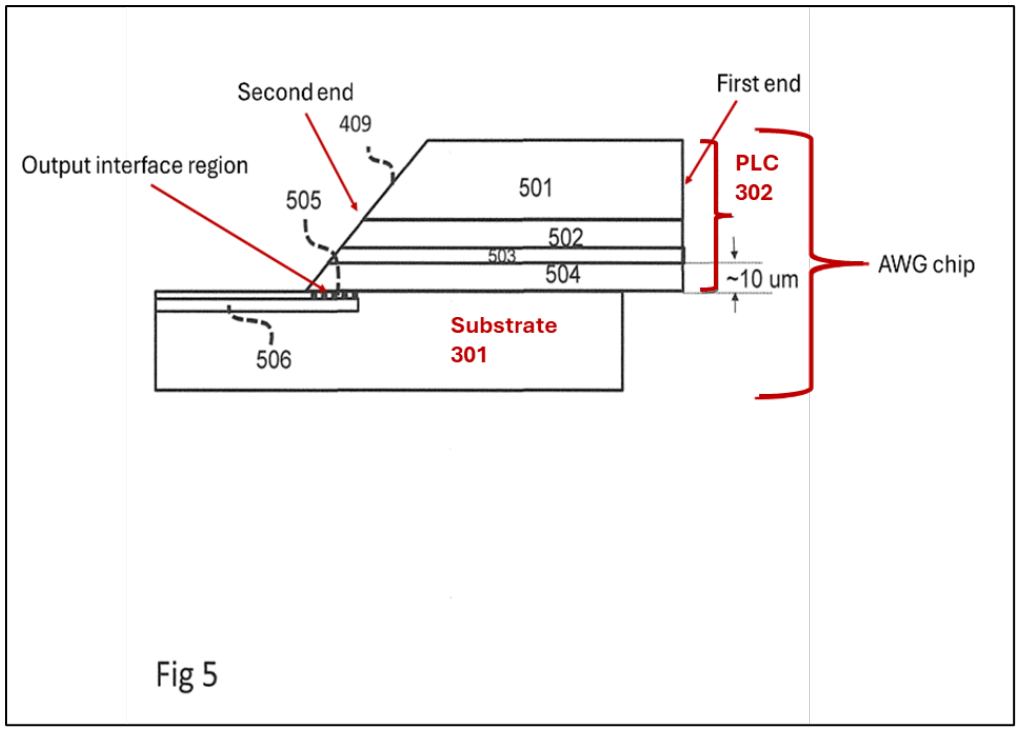

Ex. 1008, Fig. 5 (annotations added)

2. Claim 2 ("The AWG chip of claim 1, wherein the exposed output interface region is configured to pass the reflected light received via the plurality of output waveguides out of the AWG chip along a second light path that is substantially orthogonal to the first light path.")

145. In Bernasconi's AWG chip, modified in view of Soldano to include output waveguides to pass demultiplexed light along a first light path to an angled second end, the exposed output interface region is configured to pass light reflected by the second end along a second light path that is substantially orthogonal to the first light path. Ex. 1007, Fig. 2(b) (annotated below). Specifically, Bernasconi discloses that light from the AWG demultiplexer is reflected down by the turning mirror provided at the second end into an array of APDs through an exposed output interface region

of the AWG chip along a second light path that is substantially orthogonal to the first light path. *Id.*; *see also id.*, pg. 2 col. 1 ("An external turning mirror redirects the light onto an array of APDs. By careful control of the design of the optical path from the AWG facet to the APDs, we achieve high coupling without having to add any intermediate lenses.").

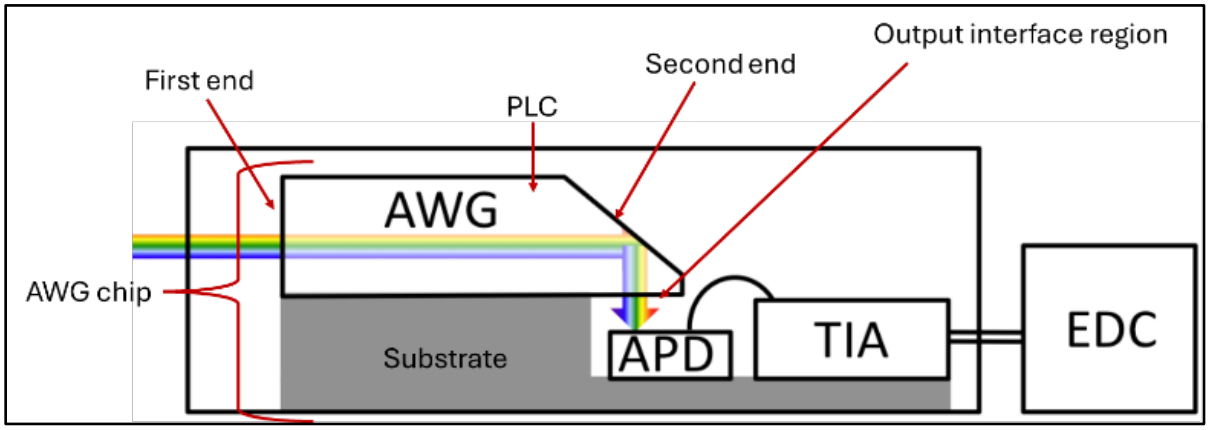

Ex. 1007, Fig. 2(b) (annotations added)

3. Claim 3 ("The AWG chip of claim 1, wherein the AWG chip defines a plurality of sidewalls extending longitudinally from the first end to the second end, and wherein the tapered region of the second end defines an angled surface that extends from a first sidewall of the plurality of sidewalls to a second sidewall of the plurality of sidewalls.")

146. As shown in Figures 2(a) and 2(b), annotated below, the AWG chip of Bernasconi includes at least two longitudinal sidewalls that extend between the first end and the second end of the AWG chip, and wherein the tapered region of the second end defines an angled surface extending from the first sidewall to the second sidewall.

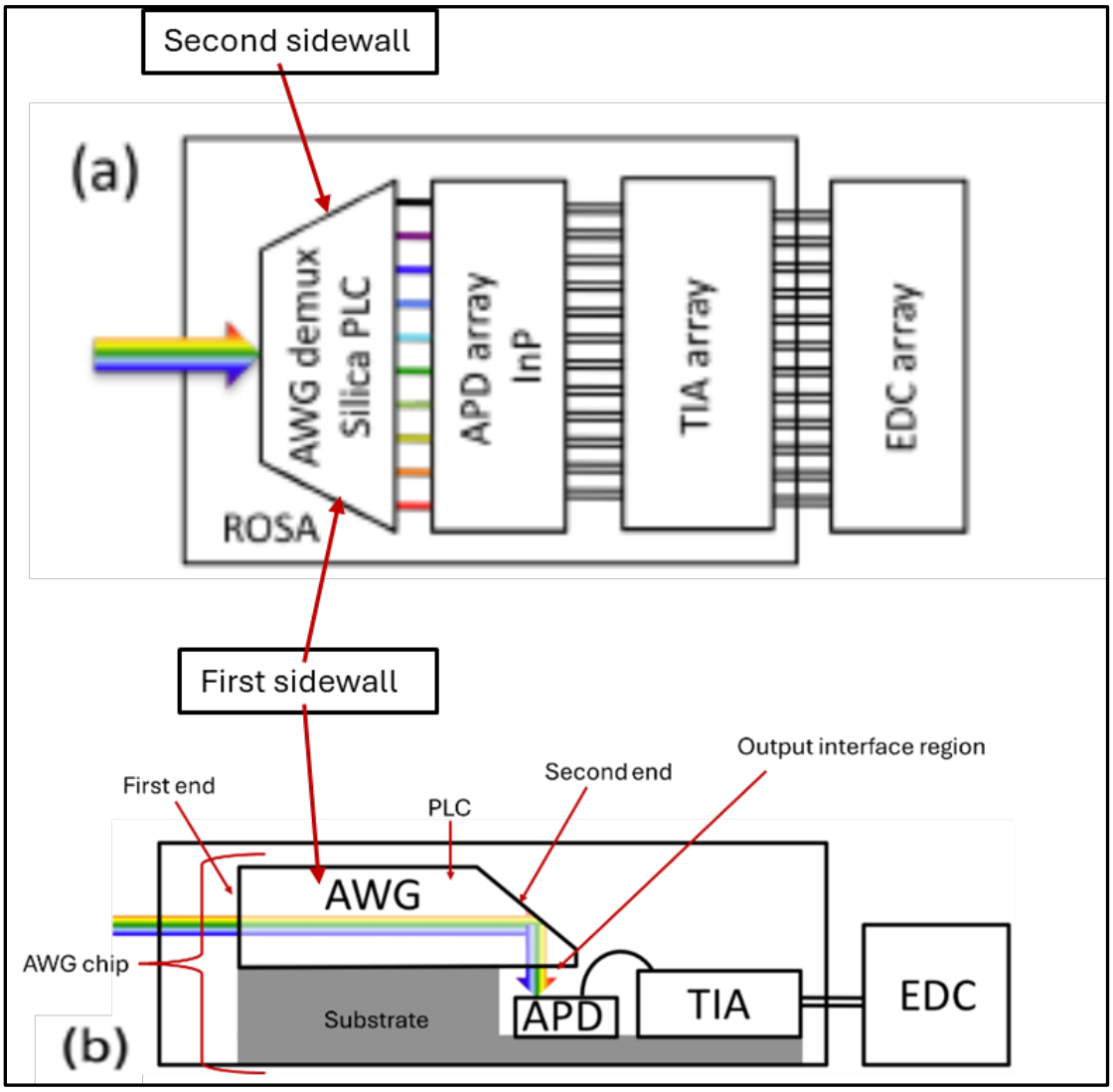

Ex. 1007, Figs. 2(a) and 2(b) (annotated below)

4. Claim 4 ("The AWG chip of claim 3, wherein the angled surface has an interior angle of about 41 to 45 degrees relative to the exposed output interface region.")

147. Although Bernasconi does not explicitly disclose the interior angle of the tapered second end of the AWG chip, a POSITA would have understood from Figure 2(b) of Bernasconi that the tapered/angled surface at the second end has an interior

angle of about 45 degrees relative to the exposed output interface region of the AWG chip to reflect light orthogonally onto the APDs, as shown in Figure 2(b). Indeed, another prior art reference, Kim (Ex. 1005), explicitly discloses an AWG demultiplexer chip having an inclined end surface of 45 degrees to effectively couple the demultiplexed light reflected by the inclined surface with corresponding photodetectors. Ex. 1005, ¶[0034]. Specifically, as discussed in detail above in Section VII.B, Kim discloses an AWG demultiplexer 120 having a tapered region defined by an inclined surface with a mirror 131 provided on the inclined surface. *Id*, ¶¶[0033]-[0034], Fig. 3. The mirror 131 reflects the light through an exposed output interface region of the demultiplexer onto a photodetector array 140. *Id.*, ¶¶[0033]-[0034] ("[O]ptical device 130 includes a single mirror 131 and four lenses 132 for the 4-channel input optical signals. Four photodetectors 140 are provided for receiving optical signals through the four lenses 132, respectively. … The mirror 131 reflects the optical signal transmitted in a horizontal direction through the demultiplexer 120, and the reflected optical signal is transmitted in a vertical direction to the lens 132. An end portion of the optical device 130 may be cut at an angle of 45 degrees and then the cut surface of the optical device 130 may be polished. Subsequently, a silica-based material may be coated on one side of the optical device 130 to form the mirror 131.") (emphasis added). Thus, Kim's

disclosure that "[a]n end portion of the optical device 130 [i.e., angled surface] may be cut at an angle of 45 degrees," which falls within the recited range of about 41 to 45 degrees, meets the recited limitation of claim 4. Moreover, a POSITA would have understood that practical fabrication tolerances (± 2–3°) were industry standard for planar lightwave circuit end-face polishing.

148. Moreover, a POSITA would have known that the angle of the tapered second end being in the range of about 41 to 45 degrees relative to the exposed output interface region is an obvious design choice and would have been obvious-to-try based on multiple considerations, as discussed below.

149. Specifically, a POSITA would have known that the ability of the AWG chip to effectively reflect light onto the photodetectors would be affected by the interior angle of the tapered/angled surface relative to the exposed output interface region. That is, the interior angle of the tapered/angled surface relative to the exposed output interface region is a result-effective variable that affects the reflection of light onto the photodetectors. And it is my understanding that the determination of the optimum range of a result-effective variable is within the grasp of a POSITA.

150. Indeed, a POSITA would have known to design an AWG chip with a tapered surface having a suitable interior angle, e.g., an angle in the range of about 41-45 degrees, based on the teachings of Bernasconi and Soldano, and through routine

experimentation and design considerations, to optimize the direct optical coupling of demultiplexed light with respective photodetectors. For example, an AWG demultiplexer chip having a tapered end with an interior angle of 45 degrees was already taught by Kim. *See* Ex. 1005, ¶¶[0033]-[0034], Fig. 3. Based on the teachings of Kim, a skilled artisan would have known how to adjust the interior angle for other AWG demultiplexer chips using routine experimentation and design considerations to effectively reflect light onto photodetectors. Thus, the recited range of about 41 to 45 degrees would have been obvious to a POSITA.

5. Claim 10 ("The AWG chip of claim 1, wherein the AWG chip is configured as a 1×N demultiplexer device whereby a single optical input signal is de-multiplexed into N different channel wavelengths.")

151. Bernasconi discloses that its AWG chip is configured to demultiplex multiwavelength light carrying many modulated channel wavelengths into individual channels, i.e., a single input optical signal is demultiplexed into N different channel wavelengths. Ex. 1007, pg. 2 col. 2 ("Free-space collimating optics (not shown) feed the incoming stream into a silica AWG demultiplexer that separates the 100-GHz spaced channels."), pg. 3 col. 2 (discussing "10-channel" demultiplexer), Fig. 2(a) (showing incoming light demultiplexed into 10 channels). A POSITA would thus have understood that the AWG chip of Bernasconi is configured as a 1×N demultiplexer.

6. Claim 11 ("The AWG chip of claim 1, wherein the AWG chip is implemented in an AWG device package.")

152. The AWG chip of Bernasconi is implemented in an AWG device package, specifically in a ROSA, as shown in Figs. 2(a) and 2(b). *See also* Ex. 1007, pg. 2 col. 2. Bernasconi further describes that the ROSA is part of a "10-channel parallel transmitter and receiver optical subassemblies (TOSA & ROSA) with an aggregated capacity of 107 Gbps. [The TOSA and ROSA] consist of arrays of DFB lasers and avalanche photodiodes (APD) combined with silica arrayed waveguide gratings as multi demultiplexers. A free-space assembly is also included for wavelength-locking purposes and signal filtering required by the used transmission format. The compact TOSA-ROSA pair delivers a power budget in excess of 22 dB that can support unamplified transmission over 80-km standard single-mode fiber (SSMF). The devices can be used in large, distributed optical interconnects or can be banded or interleaved in even larger networks or network's capacities." *Id.*, pg. 1 col. 1. A POSITA would thus have understood that the AWG chip of Bernasconi is implemented in an AWG device package.

B. [Ground 4] The Group 2 Challenged Claims Are Rendered Obvious by Ho in View of Bernasconi and Soldano and Further in View of Yoshikawa

1. Independent Claim 12

153. Ho in view of Bernasconi and further in view of Soldano renders claim 12 obvious.

a. 12[preamble] ("An optical transceiver module comprising:")

154. Ho discloses a multi-channel optical transceiver module 202 comprising a multi-channel TOSA 220, a multi-channel ROSA 230, and a dual fiber type direct link adapter 250 directly linked to the multi-channel TOSA and the multi-channel ROSA for providing optical inputs and outputs. Ex. 1006, ¶[0033] ("The compact optical transceiver module 202 generally provides an optical input and output at one end 204 and electrical input and output at another end 206. The transceiver module 202 includes a transceiver housing 210*a,* 210*b* enclosing a multi-channel TOSA 220, a multi-channel ROSA 230, and a dual fiber type direct link adapter 250 directly linked to the TOSA 220 and the ROSA 230 for providing the optical input and output.").

b. 12[a] ("a transceiver housing")

155. Ho's optical transceiver module 202 includes a transceiver housing 210*a,* 210*b*. Ex. 1006, ¶[0033], Figs. 2 and 3.

c. 12[b] ("a multi-channel receiver optical sub-assembly (ROSA) located in the transceiver housing and including an arrayed waveguide grating (AWG) chip, the AWG chip comprising:")

156. Ho discloses a multi-channel receiver optical sub-assembly (ROSA) 230 located in the transceiver housing 210*a,* 210*b*. Ex. 1006, ¶[0033]. Ho further discloses that ROSA 230 includes an AWG-type demultiplexer. *Id.*, ¶¶[0042], [0043]. Indeed, a POSITA would have known that it is common to have an AWG demultiplexer in a ROSA to separate a received signal into individual channel wavelengths for optical-to-electrical conversion and amplification.

157. Although Ho does not provide explicit details of the AWG within the ROSA, as discussed above in Section IX.A, Bernasconi and Soldano in combination disclose the details of an AWG demultiplexer chip. Therefore, a POSITA would have considered the teachings of Ho, Bernasconi, and Soldano together when designing or developing an optical transceiver module, such as the one disclosed in the '116 patent. That is, when designing or developing a transceiver module having a ROSA, a POSITA would have been motivated to consider the teachings of Bernasconi and Soldano with Ho to build an efficient and effective transceiver module having a ROSA with an AWG demultiplexer. For example, Bernasconi describes a ROSA with an AWG demultiplexer chip, as shown below. Ex. 1007, Fig. 2.

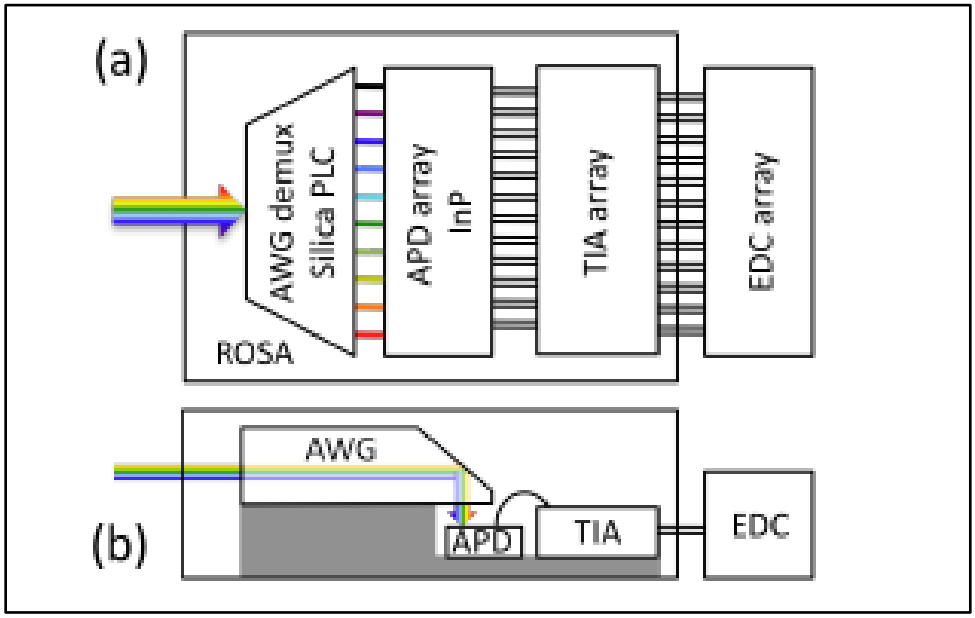

Ex. 1007, Fig. 2 (showing top view and side view of a ROSA with an AWG demultiplexer chip)

158. A POSITA would have reasonably expected success in using the AWG chip discussed in Bernasconi (modified in view of Soldano) with the ROSA in Ho, and would have been motivated to do so, because of the simple and efficient method of direct coupling demultiplexed light with respective photodetectors without using optical fibers or waveguides, as discussed in Bernasconi and Soldano. A POSITA would have recognized that the direct coupling technique disclosed in Bernasconi and Soldano provides more efficient and effective coupling between the AWG and the photodetectors and minimizes manufacturing issues and concerns associated with the passive alignment requirements outlined in Ho. *See* Ex. 1006, ¶¶[0047]-[0055] (describing passive alignment between photodiodes 270 and respective

demultiplexer outputs 237). At a minimum, the direct coupling technique described in Bernasconi and Soldano is a good alternative to the optical coupling mechanism described Ho, and a POSITA would have been motivated to try the mechanism of Bernasconi and Soldano to achieve desired coupling efficiency.

159. Furthermore, a POSITA would have readily recognized the design compatibility between the optical module of Bernasconi (modified in view of Soldano) and the transceiver of Ho, and would thus have been motivated to and reasonably expected success in using them together. This is because the optical communication techniques of Bernasconi, Soldano, and Ho are similar—they both use single mode optics and single mode fibers—and therefore a POSITA would have been able to combine them with little experimentation and testing.

160. Combining Ho's transceiver module with the AWG chip of Bernasconi and Soldano would have required nothing more than the application of ordinary skill and basic knowledge of optical components. Indeed, combining Ho with Bernasconi and Soldano would have been a combination of known prior art elements according to their established functions, and the combination would have yielded the predictable result of a transceiver with an AWG chip that provides efficient and reliable direct optical coupling of the demultiplexed outputs with corresponding photodetectors.

d. 12[c] ("a first end for coupling to an optical coupling receptacle to receive an optical signal comprising a

plurality of channel wavelengths, wherein the first end for coupling to the optical coupling receptacle includes an angled surface to reduce back reflections of an optical signal launched into the AWG chip")

161. Although Ho does not provide explicit details of the AWG chip, Bernasconi in view of Soldano describes a ROSA with an AWG chip. As discussed above, a POSITA would have reasonably expected success in using the AWG chip discussed in Bernasconi (modified in view of Soldano to have an input optical coupling receptacle and output waveguides) with the ROSA in Ho, and would have been motivated to do so because of the simple and efficient method of coupling light in and out of the AWG as discussed in Bernasconi and Soldano.

162. Specifically, the AWG chip of Bernasconi has a first end that receives an incoming multiwavelength optical signal stream through "[f]ree-space collimating optics" and feeds it into a silica AWG demultiplexer. Ex. 1007, pg. 2 col. 1, Fig. 2. Bernasconi also discloses that the incoming optical signal has 10-channels that are spaced apart by 100-GHz. *Id.*, pg. 1 col. 1, pg. 2 col. 2, Fig. 2(a) (showing that the ROSA demultiplexes the multi-wavelength input optical signal into 10 separate output channels). A POSITA would have understood that in place of free-space collimating optics, the multi-wavelength optical signal may be inputted through an optical connector receptacle that couples with the first end of the AWG chip, as taught by Soldano, to provide a more reliable and secure physical link and to

minimize signal losses caused by, for example, misalignment of the free-space optics. For example, the AWG chip of Soldano has a first end that couples to an optical coupling receptacle 303 that receives an optical signal comprising a plurality of channel wavelengths through a fiber 306. Ex. 1008, 7:29-32 ("In various embodiments, on the receive side, multiwavelength light, with many modulated channels, enters from a single fiber and is demultiplexed by a planar lightwave circuit (PLC)."), 7:62-65 ("In the embodiment of FIG. 3, multi-wavelength light, for example carrying four modulated wavelengths from a distant source, enters through fiber 306. This fiber is glued into a capillary 303 that is aligned to the PLC 302."), Fig. 3 (shown below). Accordingly, a POSITA would have been motivated to use an optical connector having a receptacle as taught by Soldano, instead of using free-space collimating optics as taught by Bernasconi, to reduce or mitigate signal losses caused by misalignment, vibrations, and pointing inaccuracies of free-space optical connections when transmitting the multi-wavelength input signal to the AWG chip.

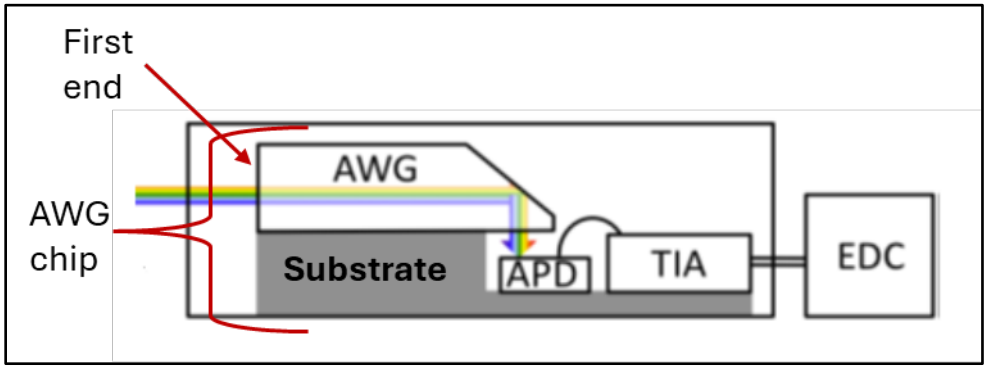

Ex. 1007, Fig. 2(b) (annotations added)

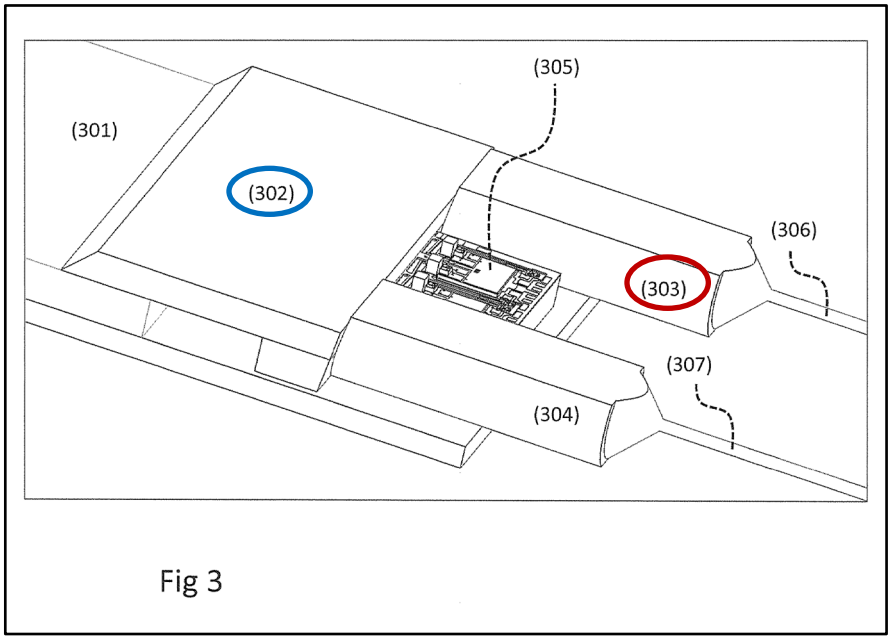

Ex. 1008, Fig. 3 (showing coupling between **optical coupling receptacle 303** and **PLC 302**)

163. Although neither Bernasconi nor Soldano discloses that the first end of the AWG chip that couples to the optical coupling receptacle includes an angled surface, such angled/inclined surfaces for reducing back reflection of incoming light was well known at the time the '116 patent application was filed. Yoshikawa (Ex. 1009), for example, discloses an optical connector receptacle (formed by sleeve assembly 21b/22b) of a TOSA 21 or ROSA 22, wherein one end 34a of stub (ferrule) 34 that interfaces with the optical elements of the TOSA/ROSA is "processed to incline by 5 to 7 degrees to a plane perpendicular to an optical axis X of the sleeve assembly 21b [or 22b]." Ex. 1009, ¶¶[0039], [0043]. This arrangement suppresses light from being reflected by the end surface 34a in the direction parallel to the optical axis X.

Id. A POSITA would have recognized that the same principle applies at the input of an AWG chip of a ROSA, where back-reflections tend to degrade receiver sensitivity. By 2010, angled physical contact (APC) connectors polished at ~8° ± 1° were universal in telecom optics to suppress back reflections below −60 dB. Incorporating Yoshikawa's angled input facet into Ho's ROSA would therefore have been a straightforward, predictable adaptation entirely consistent with industry standards, rendering claim element 12[c] obvious.

164. More specifically, it would have been obvious to a POSITA to provide an angled junction between the first end of the AWG chip of Bernasconi and the optical coupling receptacle of Soldano—by having an inclined surface at either the first end of Bernasconi's AWG chip and/or the coupling end of Soldano's optical coupling receptacle 303—to prevent back reflection of the input optical signal comprising a plurality of channel wavelengths. Indeed, angled junction between optical components to reduce back reflection of the received optical signal was routinely used in optoelectronic components. *See e.g.,* US 5,351,327 to Lurie et al. (Ex. 1010), 1:35-41 ("The prior art further recognizes that signal transmission across a connector may be improved by imparting an angled finish to the end face of the fibers. This construction results in reduced internal reflections of the signals at the end face) (citing other prior art references). Accordingly, a POSITA would have been

motivated to provide an angled surface at the first end of the AWG chip of Bernasconi to reduce back reflection of the optical signal received via Soldano's optical coupling receptacle 303. A POSITA would also have reasonably expected success in providing an angled surface at the first end of the AWG chip of Bernasconi because, as discussed above, such angled junctions were routinely used in optoelectronics and it would have only required the exercise of ordinary skill and knowledge of those skilled in the art.

e. 12[d] ("a planar lightwave circuit (PLC) coupled to the first end configured to de-multiplex each channel wavelength of the plurality of channel wavelengths")

165. Claim element 12[d] is identical to claim element 1[c] (except claim element 12[d] does not require a substrate as disclosed in 1[c]). As discussed above in 1[c] (Section IX.A.1.d), the AWG chip of Bernasconi includes a PLC that is coupled to the first end of the AWG chip and is configured to demultiplex each channel wavelength of the plurality of channel wavelengths. *See* ¶¶135-137, above.

f. 12[e] ("a plurality of output waveguides coupled to the PLC, each of the output waveguides configured to receive light corresponding to an associated de-multiplexed channel wavelength launched from the PLC and provide the light along a first light path that extends towards a second end of the AWG chip")

166. Claim element 12[e] is identical to claim element 1[d]. As discussed above in 1[d] (Section IX.A.1.e), Bernasconi in view of Soldano discloses the limitation of

12[e]. In short, Bernasconi in view of Soldano discloses a PLC-based AWG demultiplexer that transmits the demultiplexed channel wavelengths through a plurality of output waveguides along a first light path that extends towards a second end of the AWG chip that has an angled/tapered finish. *See* Section IX.A.1.e, above.

g. 12[f] ("a tapered region disposed at the second end of the AWG chip configured to receive light via the plurality of output waveguides and reflect the same towards an output interface region of the AWG chip")

167. The AWG chip of Bernasconi includes a tapered region disposed at the second end of the AWG chip, as shown in Bernasconi's Figure 2(b), below. The second end of the AWG chip is configured to receive light via a plurality of output waveguides in view of Soldano, as discussed with reference to claim terms 1[d] and 12[e], above. The light received by the second end is reflected towards an output interface region of the AWG chip. Ex. 1007, Fig. 2(b) (showing that light from the AWG is reflected down by the turning mirror provided at the second end into an array of APDs through an output interface region of the AWG chip); *see also id.*, pg. 2 col. 1 ("An external turning mirror redirects the light onto an array of APDs. By careful control of the design of the optical path from the AWG facet to the APDs, we achieve high coupling without having to add any intermediate lenses.").

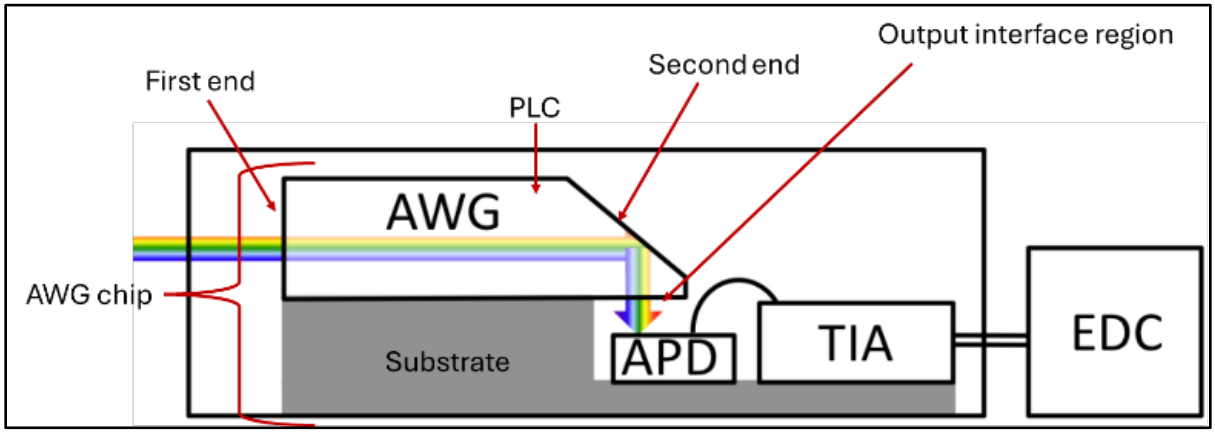

Ex. 1007, Fig. 2(b) (annotations added).

168. Soldano additionally discloses that demultiplexed light from PLC 302 is provided along output waveguides 406 to a second end of the AWG chip having a tapered region defined by an angle polish 409. Ex. 1008, Fig. 3, Fig. 4 (showing input waveguide 401 at a first end of PLC 302 and demultiplexer output waveguides 406 extending towards a second end of PLC 302 chip having an angle polish 409), 8:1-8, 9:15-37. Soldano further teaches that light from output waveguides 406 is reflected down by angle polish 409 through an output interface region of PLC 302 onto a grating coupler 505, which is a periodic grating etched onto the surface of waveguide 506 provided in substrate 301. *Id.*, Fig. 5, 9:28-37, 9:58-10:9.

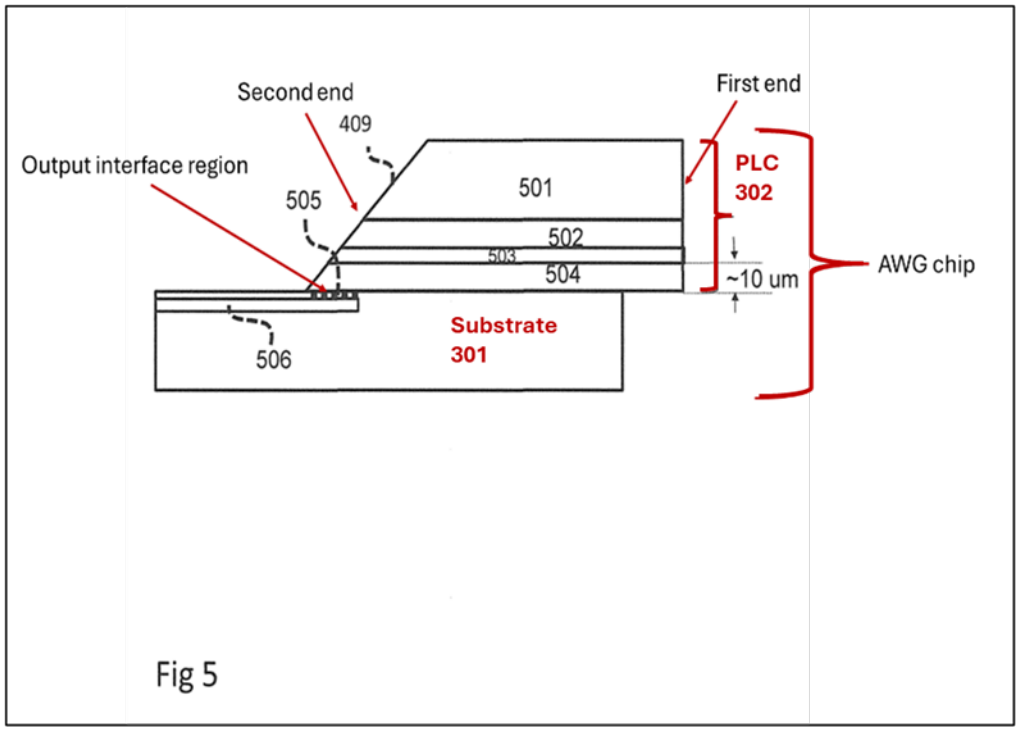

169. Ex. 1008, Fig. 5 (annotations added).

h. 12[g] ("an array of photodetector devices disposed adjacent to the output interface region of the AWG chip")

170. Bernasconi discloses an array of APDs (avalanche photodiodes), which is a type of photodetector, disposed adjacent the output interface region of the AWG chip. Ex. 1007, Fig. 2(b), pg. 2 col. 1 ("An external turning mirror redirects the light onto an array of APDs. By careful control of the design of the optical path from the AWG facet to the APDs, we achieve high coupling without having to add any intermediate lenses.").

171. Soldano also discloses that in some embodiments, an array of photodetectors 601 are provided on the silicon photonics chip 301 in lieu of grating coupler 505 and

the photodetectors are thus disposed adjacent to the output interface region of the AWG chip. Ex. 1008, Fig. 6, 8:8-20, 10:10-19 ("Depending on the silicon technology, the light in the glass PLC 302 could be deflected down by the side polish 409 and instead of hitting a grating coupler 505 and entering a waveguide 506, could instead hit a photodetector that would be placed in lieu of the grating coupler 505. The photodetector would then be electrically connected to the transimpedance amplifier. This may be simpler than the light first going via a grating coupler to a waveguide and then to a photodetector.").

i. 12[h] ("a multi-channel transmitter optical assembly (TOSA) including at least one laser package located in the transceiver housing for transmitting optical signals at different channel wavelengths.")

172. Ho's optical transceiver module 202 includes a multi-channel TOSA 220 within the transceiver housing 210*a*, 210*b*. Ex. 1006, ¶[0033]. TOSA 220 includes an array of lasers coupled to an AWG multiplexer 225. *Id.*, ¶[0037]. The array of lasers generate and transmit optical signals at different channel wavelengths. *Id.*, ¶[0028] ("One embodiment of the multi-channel TOSA 120 includes an array of lasers 122, such as laser diodes, which may be modulated by respective RF data signals (TX_D1 to TX_Dm) to generate the respective optical signals. The lasers 122 may be modulated using various modulation techniques including external modulation and direct modulation."), ¶[0029]. Ho also incorporates by reference

U.S. Application No. 13/708,569 (U.S. Patent Pub. No. 2014/0161457) (hereinafter Ex. 1010), which describes a similar TOSA 220 in more detail. *Id.*, ¶[0037]. As discussed in Ex. 1010 at ¶¶[0034]-[0035], TOSA 220 includes an array of lasers 226-1 to 226-n coupled to AWG 225, and "[e]ach laser 226-1 may be provided as a laser package including, but not limited to, a laser diode chip mounted on a laser mounting structure. The laser package may also include optical components, such as a lens for optically coupling the laser light into a respective one of the optical fibers, and/or optoelectronic components, such as a monitor photodiode." It would have been obvious to a POSITA that the lasers of TOSA 220 in Ho generate and transmit optical signals at different channel wavelengths. *See, e.g.,* Ex. 1006, ¶[0058] ("The TOSA is configured to transmit a wavelength division multiplexed (WDM) optical signal on multiple channel wavelengths."). Indeed, it is common knowledge to those skilled in the art that TOSAs include lasers modulated to transmit optical signals at different channel wavelengths.

2. Claim 13 ("The optical transceiver module of claim 12, wherein the output interface region of the AWG chip is an exposed region adjacent an air gap, and wherein the air gap separates the output interface region of the AWG chip and the array of detector devices.")

173. Bernasconi discloses that the output interface region of the AWG chip is an exposed region adjacent an air gap, wherein the air gap separates the output interface region and the array of photodetectors (APDs), as shown in Figure 2(b) below. A

POSITA may also use optical lens(es) attached to the AWG, although not necessary, to direct the optical signals from the AWG to the APDs. Such optical lenses for free-space communication have been well known and routinely used for a long time.

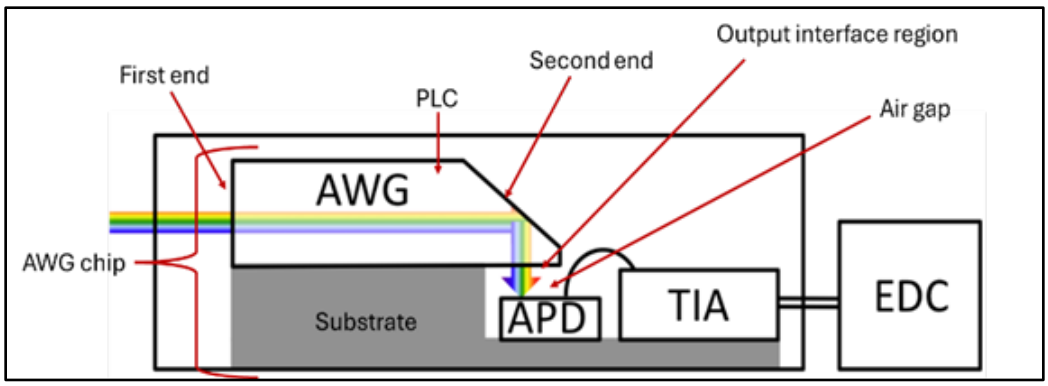

Ex. 1008, Fig. 2(b) (annotations added)

3. Claim 15 ("The optical transceiver module of claim 12, wherein the AWG chip defines a plurality of sidewalls extending longitudinally from the first end to the second end, and wherein the tapered region of the second end defines an angled surface that extends from a first sidewall of the plurality of sidewalls to a second sidewall of the plurality of sidewalls.")

174. Claim 15 is identical to claim 3. As discussed above with regard to claim 3 (Section IX.A.3), Bernasconi discloses the limitation of claim 15. As shown in Figures 2(a) and 2(b), the AWG chip of Bernasconi includes at least two longitudinal sidewalls that extend between the first end and the second end of the AWG chip, and wherein the tapered region defines an angled surface extending from the first sidewall to the second sidewall. *See* Section IX.A.3, above.

4. Claim 16 ("The optical transceiver module of claim 15, wherein the angled surface has an interior angle of about 41 to 45 degrees relative to the output interface region.")

175. Claim 16 is identical to claim 4 (except claim 4 requires the output interface region to be exposed). As discussed above with regard to claim 4 (Section IX.A.4), a POSITA would have understood from Figure 2(b) of Bernasconi that the angled surface at the second end has an interior angle of about 45 degrees relative to the output interface region of the AWG chip to reflect light orthogonally onto the APDs, as shown in Figure 2(b). Indeed, another prior art reference, Kim (Ex. 1005), explicitly discloses an AWG demultiplexer chip having an inclined end surface of 45 degrees to effectively couple the demultiplexed light reflected by the inclined surface with corresponding photodetectors. Ex. 1005, ¶[0034]. Moreover, a POSITA would have known to design an AWG chip with an angled surface having an interior angle in the range of about 41-45 degrees, based on the teachings of Bernasconi and Soldano and through routine experimentation and design considerations, to optimize the direct coupling of demultiplexed light with respective photodetectors. For example, an AWG demultiplexer chip having a tapered/angled end with an interior angle of 45 degrees was already taught by Kim. Ex. 1005, ¶¶[0033]-[0034], Fig. 3. Based on the teachings of Kim, designing Bernasconi's AWG chip to have a tapered surface with an angle of about 41-45 degrees would have been obvious to a POSITA. *See* Section IX.A.4, above. That is, based on the teachings of Kim, a POSITA would

have known how to adjust the interior angle for other AWG demultiplexer chips using routine optimization to effectively reflect light onto photodetectors. Thus, the recited range of about 41 to 45 degrees would have been obvious to a POSITA.

X. CONCLUSION

176. For the reasons explained in detail above, every element of the Challenged Claims of the ’116 patent is obvious based on the prior art discussed in Grounds 1-4. Moreover, a POSITA would have been motivated to make the modifications and/or combinations discussed in Grounds 1-4; doing so would have required only routine engineering skill and knowledge; and the modifications and/or combinations would have yielded predictable results.

177. Moreover, I am not aware of any secondary indicia of non-obviousness tied to the claimed invention that would alter my opinion that the Challenged Claims would have been obvious to a POSITA at the time of the effective filing date of the application leading to the ’116 patent.

178. I declare under penalty of perjury under the laws of the United States of America that the foregoing is true and correct, that all statements made herein of my knowledge are true, and that all statements made on information and belief are believed to be true, and that these statements were made with the knowledge that willful false statements and the like so made are punishable by fine or imprisonment, or both, under Section 1001 of Title 18 of the United States Code.

Respectfully submitted,

Dated: September 25, 2025 By:_____
Michael Lebby, Ph.D.

EXHIBIT A

Michael Lebby

EDUCATION:

2004, Doctor of Engineering (D. Eng.)
University of Bradford, United Kingdom
Electrical and Electronic Engineering with citation, "*Technical Contributions to Optoelectronics"*
(NB: This is a higher doctorate awarded on technical contribution to the field)

1987, Ph.D.
University of Bradford, United Kingdom
Electrical and Electronic Engineering with thesis, "*Characterization and Fabrication of the HFET and BICFET"*

1985, MBA
University of Bradford, United Kingdom
Thesis, "*Small Business Planning for a Start-up"*

1984, Bachelors (B. Eng. – Honours)
University of Bradford, United Kingdom
Electrical and Electronic Engineering with thesis, "*Computer Aided Testing of Semiconductor Devices"*

SUMMARY OF TECHNICAL EXPERTISE:

Industry roles (majority of career): Dr. Lebby is currently Chair of the Corporate Engagement Council, and Board of Directors for Optica (2024-2026). Dr. Lebby was honored in October 2024 as 'Photonics 100' for 2025 by Electro Optics Publication. The award is based on exceptional contributions and achievements in the field of photonics. Dr. Lebby is also currently CEO of GenusTechnik Inc., a company that provides expert witness consulting services in patent/Intellectual Property litigations as well as consulting to technology companies. GenusTechnik Inc. has served many top-tier technology clients that include both $B and $T market capitalization companies as well as well-established international level law firms. Dr. Lebby recently (Dec 2024) retired as Chairman & CEO of a public company (Lightwave Logic Inc. NASDAQ:LWLG). As CEO, Dr. Lebby led LWLG from an OTCQB company to OTCQX, and then to up-list on NASDAQ, organically, without raising financing (which is extremely rare), on 1st September 2021. Subsequently, Dr. Lebby was invited to 'ring the bell' and close the NASDAQ stock market for ethe week on 10th September 2021. The event was carried live on Fox, CNBC, Bloomberg, and BNN networks. On 1st September 2022, Lebby was elected Chairman of Lightwave Logic Inc.

Industry roles for data center technology/applications over the past 30years in both multinational as well as SME companies:

Dr. Lebby has founded and led several SME companies that have served optical communications hardware for data center environments in various senior positions including CEO and CTO (Ignis Optics, Oculi, One Chip Photonics, OIDA, Translucent Photonics, and Lightwave Logic). Dr. Lebby has also held engineering positions for data

Professor (Dr. Dr.) Michael S. Lebby, B. Eng. (Hons), MBA, Ph.D., D. Eng, Fellow NAI, IEEE, Optica (OSA); C. Eng.
1 Hawthorne St., unit 25a, San Francisco, CA 94105, USA; mobile +1 717 839 7078; drmlebby@gmail.com

communications, data center applications, and high-performance computing with global multinational companies such as: Motorola, Tyco Electronics, Bookham, Intel, and AT&T Bell Laboratories.

SME (Small and medium enterprises) or start-ups

Ignis Optics was founded by Dr. Lebby and his colleagues to supply high speed data communications optical transceivers (i.e. data center hardware) into the data center environment and manufactured these products for data center use in racks that contained servers and switches. In his role as CEO, Dr. Lebby oversaw the technical design, specifications to standards, manufacturing, marketing and sales to data center customers.

Oculi is a consulting company founded by Dr. Lebby to provide technical consulting on hardware that is utilized in data center applications. Dr. Lebby consulted on technical optical and electronic component, package, module and sub-system designs that were utilized in data center applications.

One Chip Photonics is a company that designed, manufactured very high speed optical and electronic components for data center applications. These components included optical transceivers, electronic chips such as laser drivers, transimpedance amplifiers, multiplexors, photodetector circuits, as well as the packaging and module design. As CEO, Dr. Lebby oversaw the marketing, sales, and manufacturing of hardware component to the data center industry.

Lightwave Logic is a public company developing very high-speed optical and electronic hardware components for data center applications that address the rising needs of Generative Artificial Intelligence (G-AI).

OIDA (Optoelectronics Industry Development Association) is a trade association that Dr. Lebby became the head at CEO driving new technologies for data center applications. In this role, Dr. Lebby led workshops, conferences, publications for optoelectronic hardware technologies with use in data center environments. Typical hardware would include both electronic IC chips, lasers, photodetectors, and associated components for fiber optic interconnects, transceiver modules, printed circuit boards, line cards, as well as hardware technologies to support networks, servers, switches, fiber management architecture as examples.

Global multinational companies:

Dr. Lebby's role at Tyco Electronics involved the engineering design, product manufacturing of optoelectronics and fiber optic components that are normally utilized in data center applications. Further, as Tyco Electronics was the leading provider of fiber optic management systems for racks, servers, switches etc., that are utilized in data centers, Dr. Lebby was intimate with the B2B sales, marketing, reliability, design-in and qualification process with data center orientated customers of Tyco Electronics. At Tyco Electronics, Dr. lebby attended popular standards committee meetings to ensure Tyco Electronic products both met performance as well as standardized specifications needed for data center applications.

At Intel, Dr. Lebby led engineering design teams for hardware components that were designed for data center applications. Examples of these components include electronic ICs, multiplexors, fiber optic transceivers, integrated photonics, etc., as well as a variety of roles with Intel's private equity investment division that invested in numerous SMEs to develop new and innovative technologies for data center applications, high performance computing, as well as fiber optics communications in general. Dr. Lebby attended a number of standard committee meetings to make sure that hardware being designed at Intel met standards specifications and performance.

At Motorola, Dr. Lebby focused on optoelectronic hardware design for data center applications that ranged for example from electronic and photonic components to packaged modules, line cards, fiber optic connectors as well as fiber optic network systems. In his roles at Motorola, Dr. Lebby interfaced with customers, supply management teams and technical teams to provide manufactured product for data center applications that would normally be found in B2B services with customers. Further, Dr. Lebby led reliability and quality teams in engineering and drove high performance solutions that met common industry standards.

Bookham was a hardware company (now part of Lumentum Inc.) manufacturing data communication and telecommunication fiber optic components, modules, sub-systems for both high performance computing as well as data center applications. In his role at Bookham, Dr. Lebby both led engineering teams developing hardware such as fiber optic transceivers, as well as interfacing with customers, supply management teams, reliability and quality teams to enable sales of Bookham products in the data center application space.

At AT&T Bell Laboratories, Dr. Lebby created new technological platforms to design and fabricate integrated photonics and electronic components for data center applications. Focus was on electronic transistors, lasers, LEDs, optical switches, photodetectors, as well as simple electronic circuits.

Academia role (minor part of career): Dr. Lebby has been a full professor (part-time) in optoelectronics at Glyndŵr University, Wales, UK (2013-15). Dr. Lebby has over 60 publications and has a google scholar h-index = 47 (which includes issued patents and published patent applications), i10-index = 173, with over 9200 citations.

Professor (Dr. Dr.) Michael S. Lebby, B. Eng. (Hons), MBA, Ph.D., D. Eng, Fellow NAI, IEEE, Optica (OSA); C. Eng.
1 Hawthorne St., unit 25a, San Francisco, CA 94105, USA; mobile +1 717 839 7078; drmlebby@gmail.com

Key professional bodies: Dr. Lebby is a Fellow of the National Academy of Inventors (NAI), the IEEE (Institute of Electrical and Electronic Engineers), and Optica (previously: Optical Society of America). Dr. Lebby is a Chartered Engineer of the British Institute of Electrical Engineers (roughly equivalent to the professional engineer status in USA).

Dr. Lebby started work in telecommunications industry and has generated over 40 years of experience in a broad range of technical disciplines and technologies. Dr. Lebby is well versed in photonics, PICs (photonic integrated circuits), electronics, semiconductor physics, optoelectronics, optics, materials, temperature, and mechanical engineering in general. Dr. Lebby is also experienced in matters of semiconductor packaging, data center, data communications based pluggable transceiver module design, data center electrical interconnect and connectors, ICs (digital, analog, RF, power, compound semiconductor), lighting, LIDAR, applications of artificial intelligence, sensing, displays, and polymers in general. Dr. Lebby has experience in commercial and industrial research of technologies such as silicon, silicon photonics, silicon photonic PICs, compound semiconductors, GaAs PICs, InP PICs, electronics, connectors, manufacturing, fabrication, design, simulation, testing, evaluation, reliability, qualification of new ideas, concepts and products.

Dr. Lebby is co-inventor of the world's first 'oxide VCSEL' in 1991 (this is a type of semiconductor laser) for data center applications in both high-performance computing, data communications and telecommunications. The designs were called Optobus™ and were manufactured by Motorola to provide increase data flow in short distance fiber optic ribbon interconnects. Today, these types of fiber optic interconnects are utilized in data center applications to further increase data flow to help alleviate G-AI demands in the data center environment. Further, these high-performance laser arrays are now being utilized for consumer applications for structured sensing. One example is structured sensing in modern day smart phones, another example is the application of laser mice for PCs). US Patent #5359618 "High Efficiency VCSEL and Method of Fabrication" issued 25th October 1994. Estimated aggregated commercial volumes of this semiconductor device exceed many billions of units today where the data center environment is a major customer of VCSELs.

Dr. Lebby has over 230 issued utility patents with the USPTO in subjects such as electronics, optoelectronics, photonics, packaging, transceiver modules, LiDAR components/PICs, electrical and optical connectors, sensing components, optical sub-assemblies, materials, epitaxial growth, device design, assembly, and various active and passive components (both electronic and optoelectronic for the data communications, data center industry). Dr. Lebby has over 400 media events in which he has been a speaker (keynote, invited, contributed, webcasts, panels, interviews etc.), and regularly receives invites to speak at technical conferences as well as banking and financial conferences on subjects that range from optical networking for data communications, data center industry, internet, telecommunications, generative-artificial intelligence as part of the data center industry, semiconductor eco-systems, foundries, outsourced manufacturing, technology roadmaps, corporate leadership, bring a new technology platform to market, and finance issues for small and entrepreneurial companies. Dr. Lebby has appeared in panels and interviews many times and regularly is communicating with the public on various platforms both technically, as well as financially. Dr. Lebby is currently chairman of the International PIC conference based in Europe (since it's conception in 2015) which has as its focus PICs for data communications, high performance computing, and data center applications in all of these industries. Dr. Lebby has a combined total of over 335 USPTO issued utility patents and published patent applications. This number grows to over 500 if international derivatives are included.

Dr. Lebby has participated in over 180 patent litigation cases as a technical expert witness, including over 20 trials and over 60 depositions. Dr. Lebby has authored numerous expert reports and is familiar with State (District), Federal (ITC) and PTAB-IPR court processes for expert witness testimony. Dr. Lebby has been cited in patent litigation case history (ITC investigation in the matter of: Certain Active Optical Cables and Products Containing the Same (ITC Inv #337-TA-1233)). See details below in Expert Witness Experience.

The types of products that Dr. Lebby understands and includes but are not limited to; Light Emitting Diodes (LEDs), Laser Diodes (LDs), silicon photonics, PICs, InP PICs, GaAs PICs, photodetectors (PDs), optical waveguides, fiber optics, displays (LCD, LED, OLED), lighting luminaires, plastic photonics, optical polymers, connectors, sensors, LIDAR, solar cells, lighting, data communication, CMOS, and even new opportunities such as medical and life science applications for photonics. Many of the optical and electronic components designed and manufactured by Dr. Lebby were for the data communications, data center industry.

Dr. Lebby is internationally known for his work with integrated photonics, PICs (Photonic Integrated Circuits), silicon photonics, and semiconductor technologies such as InP, GaAs, III-N, GaN, silicon, as well as SiGe and silicon ICs (MOSFETs, FinFETs, bipolar), power FETs, RF FETs, various display technologies such as LCD, OLED, LED, cameras, as well as micro-fluidics and nanostructures/wires etc. Dr. Lebby has worked with DC current as well as AC current, high frequency design, microwave design, twisted wire pairs, and multi-wavelength, visible wavelengths, in addition to 850nm/1310nm/1500nm/NIR fiber optic communications. Dr. Lebby has worked extensively in fiber optics which includes Fiber based systems, chassis', trays, modules, adapters, splice devices,

Professor (Dr. Dr.) Michael S. Lebby, B. Eng. (Hons), MBA, Ph.D., D. Eng, Fellow NAI, IEEE, Optica (OSA); C. Eng.
1 Hawthorne St., unit 25a, San Francisco, CA 94105, USA; mobile +1 717 839 7078; drmlebby@gmail.com

connectors (electrical and optical), transceivers, packaging as well as architecture and optical communication standards/protocols that include synchronous and asynchronous architectures. Fiber-optic based communications are indirectly impacted by generative-artificial intelligence (G-AI), as these systems carry the increase computational data load generated by G-AI electronics technology.

Dr. Lebby recently retired as Chairman and CEO of a public company (Lightwave Logic Inc. NASDAQ:LWLG). As CEO, Dr. Lebby took LWLG from an OTCQX company to up-list on NASDAQ, organically, without raising financing (which is extremely rare). LWLG was listed on NASDAQ 1st September 2021, and Dr. Lebby was invited to close the NASDAQ stock market on 10th September 2021 and "ring the bell". The event was carried on Fox, CNBC, Bloomberg, and BNN networks.

Dr. Lebby was voted in 2023 to become chair of Optica's Corporate Engagement Council (2024-2026) and become a member of the Optica Board of Directors. Dr. Lebby is currently a member of Optica's Corporate Engagement Council which represents the global photonics industry and is a member of Optica's Board of Directors (Jan 2024-Dec 2025).

BIOGRAPHY

Dr. Lebby (born 1961, London, UK) is an Anglo-American entrepreneur and intrapreneur in the fields of optoelectronics/photonics, electronics (lasers, LEDs, detectors, PICs, IC, RF, power, microwave etc.), and semiconductors in general and more specifically for the data center, data communications, and telecommunications industry. Dr. Lebby's career started with the British Government in 1977 in telecommunications and he did research at their research labs (RSRE Malvern) in the early 1980s. Dr. Lebby worked at AT&T's research labs: Bell Labs (1985-1989) in photonics, especially PICs, and subsequently drove the development (and co-authored the first patent) of the oxide VCSEL diode laser at Motorola in the 1990s (which is now used in laser mice, 3D structured light sensing in mobile phones, optical interconnects; where volumes of the laser are over 1B units today). From 2005-2010 he led the USA trade association in optoelectronics (OIDA) and represented the optoelectronics and photonics industry on Capitol Hill. In this role he produced broad market analysis in fiber optic communications, lighting, displays, automotive LIDAR, sensing, solar, photonics manufacturing, as well as associated technology roadmaps for the market verticals and technologies.

Dr. Lebby was a member of Lightwave Logic's Board of Directors from 2015 to 2024. In May 2017, Dr. Lebby assumed the role of CEO, and in September 2022, Chairman and CEO of Lightwave Logic Inc (NASDAQ:LWLG) until 10th December 2024. Lightwave Logic is a technological company commercializing Electro-Optical polymers and successfully up listed the company to NASDAQ on 1st September, 2021. Dr. Lebby was invited to close the NASDAQ stock market on 10th September 2021. The event was carried on Fox, CNBC, Bloomberg, BNN networks.

Dr. Lebby has led and run technical start-ups and commercialized optoelectronic and photonics technology into volume manufacturing. He has also had roles as a venture capitalist specializing in optical communications, data center applications, high-performance computing, and data communications.

. He is currently a technical expert to the European Commission. He is a Fellow member of NAI (National Academy of Inventors), IEEE, and OSA, and has been voted PIC (Photonic Integrated Circuit) business leader of the year by the PIC International Conference in 2018.

Dr. Lebby holds over 500 issued international patents (as per search engine) in photonics and electronics, that have been derived from over 230 issued USPTO utility patents, mostly in the field of optoelectronics, photonics, and semiconductors. He has been cited by the USPTO to be in the most prolific 75 inventors in USA from 1988-1997.

Dr. Lebby is passionate about photonics and has focused his efforts over the last 30years to drive new photonics manufacturing programs in USA and Europe as well as industry-based photonics technology roadmaps that include data communications, data center applications, and high-performance computing as examples.

Dr. Lebby is also a keen hobbyist in optics and philately, and has been elected to both the London Guild of Spectacle Makers as well as the Royal Philatelic Society London.

WORK HISTORY:

2023 – Present **GenusTechnik Inc.,** *CEO and CTO (part-time consulting)*

Professor (Dr. Dr.) Michael S. Lebby, B. Eng. (Hons), MBA, Ph.D., D. Eng, Fellow NAI, IEEE, Optica (OSA); C. Eng.
1 Hawthorne St., unit 25a, San Francisco, CA 94105, USA; mobile +1 717 839 7078; drmlebby@gmail.com

GenusTechnik Inc., provides consulting in expert witness, trial, deposition, expert reports, infringement, invalidity, and various patent and IP litigation in the general areas of photonics, optoelectronics, semiconductors, fiber optics communications, wireless, wireline, data center applications, high-performance computing, and data communications. GenusTechnik has engaged with patent agencies such as: IMS Expert Services, Thomson Reuters Expert Witness Services (now Round Table Group), LitXpert Expert Witness Group, Teklicon Expert Witness Agency, Beche Expert Services Group, Forensis Group: Expert Witness Services, and Expertconnect. GenusTechnik Inc. also provides consulting to Ambature Inc. in superconductivity with applications for data center cooling technology, semiconductors, as well as medical imaging.

2003 – 2022 **Oculi LLC,** *CEO and CTO (part-time consulting)*

Oculi LLC), provided consulting in expert witness, trial, deposition, expert reports, infringement, invalidity, for patent and IP litigation. Subjects included: photonics, optoelectronics, semiconductors, electronic transistors, electronic circuits, integrated circuits (ICs), displays, cameras, optics, lenses, packaging, and fiber optics for telecommunication technology in general. Oculi LLC provided consulting to Ambature Inc. in superconductivity with applications for data center cooling technology, semiconductors, as well as medical imaging.

2015 – 2024 **Lightwave Logic (NASDAQ:LWLG)***, Chairman, CEO, & Director, Board of Directors*

In 2015 Dr. Lebby became a director of Lightwave Logic to assist in the company for competitive optical modulator products and associated packaging, manufacturing, and technology roadmaps/marketing. Lightwave Logic is a public company developing very high-speed optical and electronic hardware components for data center applications that address the rising needs of Generative Artificial Intelligence (G-AI). In May 2017, Dr. Lebby became CEO of Lightwave Logic. On 1st September 2021, Dr. Lebby successfully guided Lightwave Logic to up-list to NASDAQ, and was invited to ring the closing bell on 10th September 2021. The NASDAQ up-list was organic i.e. no reverse split, no raised funds. The organic up-list is considered very rare in the financial industry. In September 2022, Lebby became Chairman and CEO of Lightwave Logic Inc. Dr. Lebby retired from Lightwave Logic in December 2024.

2014 – 2016 **University Southern California,** *Director CFR (Corp & Foundation Relations)*

Dr. Lebby assisted USC Viterbi Engineering to foster tighter faculty-industry relationships in high technology, IT, social media, graphic arts, electronics, photonics (solar, display, medical), fiber communications segments, wireless, wireline, data center applications, high-performance computing, and data communications.

2013 – Present **European Commission***, Technical Expert*

In 2013 Dr. Lebby became a technical expert for the Photonics Unit of the European Commission. Dr. Lebby has participated in organizing workshops, lectures, evaluating photonics proposals, and advising the Commission on funded projects. Dr. Lebby currently is an advisor on a number of photonics and PIC based pilot lines (MIRPHAB, PI-SCALE, PIX4LIFE, PIXAPP, InPULSE, Phabulous, PhotonHub) and photonics based cardiovascular disease programs (CARDIS and InSide) as well as LIDAR/RADAR programs (Coralidar and Retina). More recently, Dr. Lebby has been consulting on larger framework (multi-country) projects that include electronics (power/RF) as well as photonic PIC based technologies and associated fabrication techniques (photolithography, etching, dielectrics, metallization etc.) that have applications with data centers and high-performance computing. Work includes displays, LEDs, lighting/LED luminaires, OLEDs, LIDAR, automotive, G-AI applications, micro-optics, optics, optical lenses, electrical and electronic

Professor (Dr. Dr.) Michael S. Lebby, B. Eng. (Hons), MBA, Ph.D., D. Eng, Fellow NAI, IEEE, Optica (OSA); C. Eng.
1 Hawthorne St., unit 25a, San Francisco, CA 94105, USA; mobile +1 717 839 7078; drmlebby@gmail.com

ICs, packages and connectors, InP/Silicon PIC based photonics, near infra-red technologies (including PICs), fiber optics that includes transceivers, optical networking, as well as synchronous and asynchronous architectures, sensing, medical photonics, and medical imaging, technology roadmapping, electronics, electrical interconnects/connectors, IC design, RF electronics, Power electronics, microwave, acoustic and optical filters fiber optics communications, wireless, wireline, data center applications, high-performance computing, and data communications.

2013 – 2015 **OneChip Photonics Corporation**, *President and CEO*

In 2008 Dr. Lebby was elected independent board member for One Chip Photonics Inc. He was elected CEO in 2013. One Chip Photonics focused on technical and business operational strategy for advanced circuit based InP Photonic Integrated Circuit (PIC) and optoelectronic Integrated Circuit (OEIC) platforms that were specified for fiber optics communications, data center applications, high-performance computing, and data communications.

2013 – 2015 **Glyndŵr University**, *Professor, Chair of Optoelectronics*

In 2013 Dr. Lebby became full Professor of Optoelectronics (part-time) to assist Glyndwr University to position itself as a leader in semiconductors, optoelectronics and photonics, data center components, fiber optics communications, high-performance computing, and data communications.. Areas of focus include data center hardware components such as photonic integrated circuits (PICs) and optoelectronics integrated circuits (OEICs) as well as design, simulation, and testing of laser diodes, displays, optics, and solar cells.

2010 – 2013 **Translucent, Inc.,** *GM and CTO*

Dr. Lebby positioned Translucent on the product development and manufacture of epitaxial semiconductor wafers for the solar, power and lighting industries. Dr. Lebby led the R&D and development of MBE based rare earth oxide single crystal epitaxial layers deposited onto large silicon wafers. On top of these wafers both MBE and MOCVD Gallium Nitride (GaN, III-Nitride) epitaxial device layers were grown for devices and PIC solutions using novel fabrication techniques and electrode and contact formation. The use of GaN-on-Si is expected to be a strong catalyst for change in the power electronics and LED lighting industries. In a parallel program at Translucent, Dr. Lebby led the development efforts to develop and productize Germanium-Tin (GeSn) template wafers onto large format silicon wafers (Ge-on-Si) to enable cost effective, and ultra-high efficiency multi-junction solar cells for the CPV industry. Dr. Lebby also led the team to develop high performance GaN transistors and FETs for applications with high power, high frequency, electrically powered products that included automotive, data centers, and consumer productrs. Areas of advanced interconnect using new and novel material compounds were explored that focused on lighting, sensing, biomedical, RF electronics, Power electronics, solar, fiber optic communications, RF filters, ICs etc.

2005 – 2010 **OIDA** (Optoelectronic Industry Development Association)**,** *Executive Director, President, and CEO (Board Member)*

Dr. Lebby represented the optoelectronics industry and organized technical conferences/workshops/forecasts with industry roadmaps. Initiated green photonics metrics. Dr. Lebby positioned OIDA as a national resource in the field of optoelectronics and has represented industry in many capacities ranging from talks, papers, expert witness, testimony, market and technical reports. Dr. Lebby created ***new industry-based initiatives*** in fiber optics broadband, fiber optic communications, data center applications, data communications as well as the green photonics movement (solar technologies, displays, LED lighting technologies, automotive) that is now occurring globally. Parts of the roadmap included various applications for PIC based photonic technologies for data communications, high performance computing and data center applications.

2003 – 2005 **OCLARO (after acquisition of Bookham in 2003),** *VP Technology and Business Development*

Professor (Dr. Dr.) Michael S. Lebby, B. Eng. (Hons), MBA, Ph.D., D. Eng, Fellow NAI, IEEE, Optica (OSA); C. Eng.
1 Hawthorne St., unit 25a, San Francisco, CA 94105, USA; mobile +1 717 839 7078; drmlebby@gmail.com

Design and manufacture of data center, data communications, high-performance computing, telecommunication hardware components based on optoelectronics and electronics semiconductors as well as a broad portfolio of components, modules, sub-systems, line cards for communications in general. San Jose, Ca. Focus on technology data center, high-performance computing, data communications strategy for components and sub-systems that included InP based PICs.

2001–- 2003 **Ignis Optics,** *President and CEO (Founder/Board Member)*

Venture-backed start-up, San Jose, California manufacturing 10Gbps and OC192/OC48 fiber optic transceivers with micro-controllers using the XFP form-factor to support the growing data center and high-performance computing industry.

1999 – 2001 **Intel Capital,** *Director Business Development/Investor (w/Board observer positions on Investment)*

Intel Capital, Santa Clara, California. In 1999, Dr. Lebby joined Intel as a corporate investor and was responsible for sourcing, negotiating, and closing private placement equity deals in the optical networking, data center applications, high performance computing, and data communications industry.

component, display, projection technologies, LED lighting, LED luminaires, and silicon, silicon photonics/PIC semiconductor arenas.

1998 – 1999 **TE Connectivity (renamed from AMP, then Tyco Electronics),** *Director Technology & Business Development (Fiber Optics)*

Global Optoelectronics Division: Technology strategy for optical communications products that included electrical and optical interconnects, electrical and optical connectors (RJ, MT, LC etc.), for backplane, cabinet, switching, network management systems for the growth of data centers, high performance computing applications products, and data communications hardware in general.

1989 – 1998 **Motorola,** *R&D Manager*

Corporate R&D Labs, Tempe, Arizona. Focus on semiconductors, semiconductor fabrication techniques (metallization, etching, photolithography, dielectrics). Optoelectronics: VCSEL based product solutions (OPTOBUS); materials, devices, packaging, systems. Other technologies included displays, field emission, LED, LCD, OLED, virtual/micro and projection. At the time, Dr. Lebby was also the lead inventor in Motorola's history with over 150 issued utility patents. Dr. Lebby worked in the silicon and compound semiconductor fabrication plants (fabs) to become proficient in deposition/etching/alignment tooling as well as design and simulation. Many of the component technologies that were researched at Motorola can now be found in AR, VR, displays, automotive LIDAR, solar, sensing, consumer products such as mobile phones, as well as traditional electronics industries that include both InP, GaAs, GaN, and silicon photonics-based data center specified PICs. Work included optical networking with both electronics as well as optoelectronics synchronous and asynchronous architectures as well as electronic and optical interconnects with both electrical and optical connectors. Both wireline (twisted wire pair, fiber optics) as well as wireless (RF, microwave, optical) interconnects were utilized for a number of applications for high performance computing, data center interconnects, and data communications.

1985 – 1989 **AT&T,** *Researcher*

Professor (Dr. Dr.) Michael S. Lebby, B. Eng. (Hons), MBA, Ph.D., D. Eng, Fellow NAI, IEEE, Optica (OSA); C. Eng.
1 Hawthorne St., unit 25a, San Francisco, CA 94105, USA; mobile +1 717 839 7078; drmlebby@gmail.com

AT&T Bell Labs - Photonics Research Dept (Dept 11366), Holmdel, NJ. Dr. Lebby designed and fabricated new GaAs and InP optoelectronic and electronic devices that were grown both by MOCVD and MBE for projects that included optical computing, fiber optic communications, high-performance computing as well as other computing applications that were focused on PIC based solutions. Work involved the fabrication of electrodes, contacts, etching, dielectrics, photolithography etc.

1977 – 1984 **UK Ministry of Defense,** *Apprenticeship/Journeyman + Electronics Engineer (REME – Royal Electrical and Mechanical Engineers, and RSRE – Royal Signals and Radar Establishment)*

Dr. Lebby started his career at the Royal Electrical and Mechanical Engineer (REME) division of the Ministry of Defence in the UK. Lebby was a telecommunications apprentice and repaired all types of radio/RF/UHF communications equipment that included electrical connections, connectors, and circuits. Equipment included both wireless communications as well as telecommunications electronics switching systems for traditional wireline calls. Lebby qualified as a fully qualified Apprentice (or Journeyman) specializing in electronic copper based telecommunications, and early high performance computing approaches in 1980. Dr. Lebby moved to the Royal Signal and Radar Establishment (RSRE) to study material, fabrication and characterization issues of GaAs and InP semiconductor devices and high frequency/ultra-high frequency wireline and wireless communications.

SELECTED PROFESSIONAL ACTIVITIES & AWARDS:

- Nominated for the Photonics 100 for 2025 by Electro Optics Publication October 2024. The award is based on exceptional contributions and achievements in the field of photonics as well a level of dedication and innovation that continues to inspire and advance the photonics industry.
- Elected Chairman of Lightwave Logic Inc., NASDAQ:LWLG 1st September 2022 until retiring in December 2024.
- Elected to the Corporate Engagement Council (newly formed OIDA to represent the global optical industry) for Optica in June 2022 and voted to become Chairman for 2024-2026 that is represented on Optica's Board of Directors.
- Invited to ring the closing bell of NASDAQ (with associated TV interviews) on 10th September, 2021
- Elected Fellow of the **National Academy of Inventors** (NAI) in 2020.
- Voted winner at the PIC Conference (Photonic Integrated Circuits) as PIC **Entrepreneur and Business Leader of the Year** (March 2018).
- Dr. Lebby is **co-inventor of the oxide VCSEL** (semiconductor laser) that is now being utilized for consumer applications (*structured sensing in smart mobile phones*). US Patent #5359618 "High Efficiency VCSEL and Method of Fabrication" issued 25th October 1994.
- Dr. Lebby was recognized professionally as a **Fellow of IEEE (2005) and OSA (2007)** with his technical contributions to the field of optoelectronics.
- Dr. Lebby is a member of the Fellows review committee of IEEE.
- As an inventor Dr. Lebby has achieved **over 230 issued utility patents with the USPTO.**
- As an inventor Dr. Lebby has ~80 published utility patent applications with the USPTO
- As an inventor Dr. Lebby has **over 500 issued patents** world-wide if international derivatives are counted.
- Dr. Lebby's novel laser-based device, packaging, modules designs led Motorola to sell their patent portfolio independently where a number of the patents have "very high licensing coefficients." Dr. Lebby was given a special award from the Chairman of Motorola for exemplary patent invention accomplishments in 1998 and **# 1 prolific inventor in Motorola's history** with the majority of work focused for data center applications, high performance computing, and data communications.
-
- **Over 60 publications** (www.linkedin.com/in/lebby)
- **Over 400 public media activities** (that include: Books, Chapters, Reports, Abstracts, Videos, Lectures, Speeches, Reviews, Courses, Talks, Invited Talks, Keynote Talks, Plenary Talks, Webinars, Interviews, Articles, etc.). See at www.linkedin.com/in/lebby
- Author of OIDA's **annual market optoelectronics report** and forecast (2009 version is over 600 pages), which receives international exposure and recognition. Regularly interacts with government agencies in Washington DC on photonics-based projects (DARPA, ARPA-E, NIH, NSF, DOE, NIST, DoD etc.). Typical

Professor (Dr. Dr.) Michael S. Lebby, B. Eng. (Hons), MBA, Ph.D., D. Eng, Fellow NAI, IEEE, Optica (OSA); C. Eng.
1 Hawthorne St., unit 25a, San Francisco, CA 94105, USA; mobile +1 717 839 7078; drmlebby@gmail.com

chapters included: LEDs, laser diodes, fiber optic communications, data center applications, high performance computing, sensors, displays, solar, green photonics, military photonics, automotive LIDAR, medical, biomedical, lighting (LED, OLED), displays (LCD, OLED) and applications of photonics and electronics that include RF/power/compound semiconductor, ICs, and associated components.

- Is the recipient of a **2nd doctorate** (higher) from Bradford University, UK, and only the second in the universities history to receive a D.Eng from industry (rest being academia).
- **Intrepreneur** at: (i) Motorola: Co-founded Optobus division – VCSEL laser based parallel optical interconnect solution, and (ii) Intel: Co-founded the Intel optics division for silicon photonics where over $300M was initially invested for the division for data center applications, high performance computing, and data communications.
- **Entrepreneur**: Founded (and CEO) Ignis Optics Inc., a venture backed company (>$30M) that designed and manufactured 10Gbps fiber optic transceivers. Sold the company to Bookham (NASDAQ: BKHM) in 2003. Restructured OneChip Photonics (as CEO) through bankruptcy, and new VC-based funding. Assisted in the raising of >$50M VC funding as a member of BoD. Founded Oculi LLC and Obsidian Motors LLC.
- IEEE CPMT **Board of Governors** ('98- '02); IEEE Phoenix Waves and Devices Junior Engineer of the Year (1993); CPMT Distinguished lecturer (2000), CPMT technical committee (TC-10 & ECTC) 1991 to 2011
- Advised at **Board of Director** level for a number of technical start-ups
- **Chartered Engineer** (C.Eng) from IEE (UK). The chartered engineering status is equivalent to the US PE (professional engineer)

Professor (Dr. Dr.) Michael S. Lebby, B. Eng. (Hons), MBA, Ph.D., D. Eng, Fellow NAI, IEEE, Optica (OSA); C. Eng.
1 Hawthorne St., unit 25a, San Francisco, CA 94105, USA; mobile +1 717 839 7078; drmlebby@gmail.com

EXPERT WITNESS EXPERIENCE

Summary:
Depositions (total-to-date) >60
Trial/Hearing/court/PTAB appearances >20 (with IPR/PTAB 'paper trial', this total increases to >40)

Cited patent litigation case history: In essence, the following case history means that the expert doesn't have to disclose every minute detail in his expert report. He is allowed to disclose theories in the report and expand on them in his witness statement.

See also In The Matter Of Certain Light-Emitting Diode Products, Systems, And Components Thereof, Inv. No. 337-TA-1168, Order No. 34, 2020 WL 1026335 (Feb. 14, 2020) (denying motion *in limine* to preclude testimony where: "[t]he invalidity theories at issue were previously disclosed at least in Dr. Lebby's expert report, and LSG had the opportunity to test these theories at Dr. Lebby's deposition.")

See case # 81 below

Patent litigation cases engaged:

1. Active case work: 1Q2009 (March 24th 2009); *Testimony: US-China Economic and security review commission on the optoelectronics industry. US Congress, Capitol Hill;* Written statement on the status of the USA optoelectronics industry with aural cross-examination by the commission. Trial experience.
    a. Deposition: 0 (Cumulative total: 0)
    b. Trial/Hearing/court/PTAB appearance: 1 (Cumulative total: 1)
        i. ITC trial appearance: 0 (Cumulative total: 0)
        ii. District Court trial appearance: 0 (Cumulative total: 0)
        iii. PTAB Court trial/deposition appearance: 0 (Cumulative total: 0)
    c. Technology: Optoelectronics (optical storage, fiber optic communications, sensors, high power lasers, LED lighting, LED luminaires etc.).
2. Active case work: 3Q2010-1Q2011; *Finisar Corp. v. Optical Communication Products Inc.*, No. 10-CV-05617 and No. 11-cv-00104 (retained by plaintiff - Morgan, Lewis & Bockius LLP).
    a. Deposition: 0 (Cumulative total: 0)
    b. Trial/Hearing/court/PTAB appearance: 0 (Cumulative total: 1)
        i. ITC trial appearance: 0 (Cumulative total: 0)
        ii. District Court trial appearance: 0 (Cumulative total: 0)
        iii. PTAB Court trial/deposition appearance: 0 (Cumulative total: 0)
    c. Technology: semiconductor lasers/VCSELs, fiber optic transceiver modules
3. Active case work: 1Q2011; *Ziptronix, Inc. v. OmniVision Technologies, Inc., Taiwan Semiconductor Manufacturing Company Ltd., and TSMC North America Corp.,* No. 11-CV-5235 (retained by plaintiff – Alston Bird LLP).
    a. Deposition: 0 (Cumulative total: 0)
    b. Trial/Hearing/court/PTAB appearance: 0 (Cumulative total: 1)
        i. ITC trial appearance: 0 (Cumulative total: 0)
        ii. District Court trial appearance: 0 (Cumulative total: 0)
        iii. PTAB Court trial/deposition appearance: 0 (Cumulative total: 0)
    c. Technology: CMOS image sensors; design and fabrication
4. Active case work: 3Q2011 to 3Q2012; *Certain Light-Emitting Diodes and Products Containing Same*, Inv. No. 337-TA-798 (USITC filed July 15, 2011), LG and Samsung v. Osram (retained by respondent Samsung – Covington & Burling LLP). Deposition (x2) and trial experience.
    a. Deposition: 3 (Cumulative total: 3)
    b. Trial/Hearing/court/PTAB appearance: 1 (Cumulative total: 2)
        i. ITC trial appearance: 1 (Cumulative total: 1)
        ii. District Court trial appearance: 0 (Cumulative total: 0)
        iii. PTAB Court trial/deposition appearance: 0 (Cumulative total: 0)
    c. Technology: LEDs, device design, color gamut, packaging, optical lensing, lead frames, surface mount packaging.
5. Active case work: 3Q2011 to 2Q2015; *Cheetah Omni, LLC v. Alcatel-Lucent USA Inc.*, No. 11-CV-390 (E.D. Tex. filed July 29, 2011) (retained by plaintiff – Brooks Kushman). Deposition experience (x2).
    a. Deposition: 1 (Cumulative total: 4)
    b. Trial/Hearing/court/PTAB appearance: 0 (Cumulative total: 2)

Professor (Dr. Dr.) Michael S. Lebby, B. Eng. (Hons), MBA, Ph.D., D. Eng, Fellow NAI, IEEE, Optica (OSA); C. Eng.
1 Hawthorne St., unit 25a, San Francisco, CA 94105, USA; mobile +1 717 839 7078; drmlebby@gmail.com

i. ITC trial appearance: 0 (Cumulative total: 1)
ii. District Court trial appearance: 0 (Cumulative total: 0)
iii. PTAB Court trial/deposition appearance: 0 (Cumulative total: 0)

c. Technology: Fiber optic networks, optical switches, ROADMs and optical filters (dielectric based).

6. Active case work: 4Q2012 to 3Q2014**;** *Finisar Corp. v. Cheetah Omni, LLC*, No. 11-CV-15625 (E.D. Mich. filed Dec. 23, 2011) (retained by defendant – Brooks Kushman). Deposition experience (x1).
   a. Deposition: 1 (Cumulative total: 5)
   b. Trial/Hearing/court/PTAB appearance: 0 (Cumulative total: 2)
      i. ITC trial appearance: 0 (Cumulative total: 1)
      ii. District Court trial appearance: 0 (Cumulative total: 0)
      iii. PTAB Court trial/deposition appearance: 0 (Cumulative total: 0)
   c. Technology: Wavelength optical switches, optical filters, and optical components, liquid crystal technology.
7. Active case work: 4Q2012 to 3Q2013**;** *Certain Optoelectronic Devices for Fiber Optic Communications, Components Thereof, and Prods. Containing the Same*, Inv. No. 337-TA-860 (USITC filed Sept. 24, 2012) (retained by respondent – Mellanox, IPtronics and FCI Inc and counsel Alston & Bird LLP). Deposition (x2) and trial experience.
   a. Deposition: 2 (Cumulative total: 7)
   b. Trial/Hearing/court/PTAB appearance: 1 (Cumulative total: 3)
      i. ITC trial appearance: 1 (Cumulative total: 2)
      ii. District Court trial appearance: 0 (Cumulative total: 0)
      iii. PTAB Court trial/deposition appearance: 0 (Cumulative total: 0)
   c. Technology: IC design, layout, and operation; especially laser driver chips for VCSELs. High speed laboratory testing.
8. Active case work: 3Q2014 to 2Q2015**;** *Microscan Sys., Inc. v. Cognex Corp.*, No. 14-CV-6952 (S.D.N.Y. filed Aug. 27, 2014) (retained by plaintiff – Morrison & Foerster LLP). Deposition (x1) and trail experience.
   a. Deposition: 1 (Cumulative total: 8)
   b. Trial/Hearing/court/PTAB appearance: 1 (Cumulative total: 4)
      i. ITC trial appearance: 0 (Cumulative total: 2)
      ii. District Court trial appearance: 1 (Cumulative total: 1)
      iii. PTAB Court trial/deposition appearance: 0 (Cumulative total: 0)
   c. Technology: Bar code scanners and associated optics such as imagers, lasers, LEDs, molded optics. Laboratory testing.
9. Active case work: 2Q2014 to 1Q2016**;** *Avago Techs. Fiber IP (Singapore) PTE Ltd. v. IPtronics Inc.*, No. 10-CV-2863 (N.D. Cal. filed June 29, 2010) (retained by respondent – Alston & Bird LLP).
   a. Deposition: 0 (Cumulative total: 8)
   b. Trial/Hearing/court/PTAB appearance: 0 (Cumulative total: 4)
      i. ITC trial appearance: 0 (Cumulative total: 2)
      ii. District Court trial appearance: 0 (Cumulative total: 1)
      iii. PTAB Court trial/deposition appearance: 0 (Cumulative total: 0)
   c. Technology: IC design, layout, and operation; especially laser driver chips for VCSELs. High speed laboratory testing.
10. Active case work: 1Q2015 to 3Q2015; *Regarding certain optical disc drives*, Inv. No. 337-TA-897 (USITC filed Oct. 21, 2013) (retained by respondent – O'Melveny & Myers LLP).
    a. Deposition: 0 (Cumulative total: 8)
    b. Trial/Hearing/court/PTAB appearance: 0 (Cumulative total: 4)
       i. ITC trial appearance: 0 (Cumulative total: 2)
       ii. District Court trial appearance: 0 (Cumulative total: 1)
       iii. PTAB Court trial/deposition appearance: 0 (Cumulative total: 0)
    c. Technology: CD, CVD, BluRay optical disk drives, optical components, laser diodes, and optical beam patterns. Laboratory testing of visible optics.
11. Active case work: 1Q2015 to 2Q2015; *BMW of N. Am., LLC v. Innovative Display Techs., LLC*, No. IPR2015-00933, IPR2015-00934 (P.T.A.B. filed Mar. 24, 2015) (retained by plaintiff – Crowell Moring LLP).
    a. Deposition: 0 (Cumulative total: 8)
    b. Trial/Hearing/court/PTAB appearance: 0 (Cumulative total: 4)
       i. ITC trial appearance: 0 (Cumulative total: 2)
       ii. District Court trial appearance: 0 (Cumulative total: 1)
       iii. PTAB Court trial/deposition appearance: 0 (Cumulative total: 0)
    c. Technology: LED backlights for vehicles; LED package and optical module/LED luminaire design.
12. Active case work: 1Q2015 to 2Q2015; *BMW of N. Am., LLC v. Innovative Display Techs., LLC*, No. IPR2015-00934 (P.T.A.B. filed Mar. 24, 2015) (retained by plaintiff – Crowell Moring LLP).
    a. Deposition: 0 (Cumulative total: 8)
    b. Trial/Hearing/court/PTAB appearance: 0 (Cumulative total: 4)
       i. ITC trial appearance: 0 (Cumulative total: 2)

Professor (Dr. Dr.) Michael S. Lebby, B. Eng. (Hons), MBA, Ph.D., D. Eng, Fellow NAI, IEEE, Optica (OSA); C. Eng.
1 Hawthorne St., unit 25a, San Francisco, CA 94105, USA; mobile +1 717 839 7078; drmlebby@gmail.com

ii. District Court trial appearance: 0 (Cumulative total: 1)
iii. PTAB Court trial/deposition appearance: 0 (Cumulative total: 0)
c. Technology: LED backlights for vehicles; LED package and optical module/luminaire design.

13. Active case work: 1Q2015 to 3Q2016; *OneChip Photonics Inc.,* Pre-litigation IP Case No. TBD; (retained by plaintiff – Patent Monetization Inc. (PMI)).
    a. Deposition: 0 (Cumulative total: 8)
    b. Trial/Hearing/court/PTAB appearance: 0 (Cumulative total: 4)
        i. ITC trial appearance: 0 (Cumulative total: 2)
        ii. District Court trial appearance: 0 (Cumulative total: 1)
        iii. PTAB Court trial/deposition appearance: 0 (Cumulative total: 0)
    c. Technology: Photonic Integrated Circuits using InP (Indium Phosphide); lasers, detectors, waveguides, mux/demux, spot size converters.
14. Active case work: 2Q2016; *IDT v. Hyundai Motor Co.,* No. 14-CV-201 (E.D. Tex. filed May 4, 2015) (retained by defendant – DLA Piper LLP).
    a. Deposition: 0 (Cumulative total: 8)
    b. Trial/Hearing/court/PTAB appearance: 0 (Cumulative total: 4)
        i. ITC trial appearance: 0 (Cumulative total: 2)
        ii. District Court trial appearance: 0 (Cumulative total: 1)
        iii. PTAB Court trial/deposition appearance: 0 (Cumulative total: 0)
    c. Technology: LED devices, packages and modules/luminaires for vehicles.
15. Active case work: 1Q2015 to 3Q2015; *Cree Inc., v. Honeywell Int'l Inc.,* No. 3:14-CV-737 (W.D. Wisc. filed Oct. 28, 2014) (retained by defendant - Arnold & Porter LLP). Deposition experience (x1).
    a. Deposition: 1 (Cumulative total: 9)
    b. Trial/Hearing/court/PTAB appearance: 0 (Cumulative total: 4)
        i. ITC trial appearance: 0 (Cumulative total: 2)
        ii. District Court trial appearance: 0 (Cumulative total: 1)
        iii. PTAB Court trial/deposition appearance: 0 (Cumulative total: 0)
    c. Technology: LEDs for mobile phones; LED epitaxial layers, device designs, optical lensing, packaging. Laboratory reverse engineering using TEM/SEM/EDAX etc.
16. Active case work: 2Q2015 to 4Q2015; *Trs. of Boston Univ. v. Everlight Elecs. Co.*, Nos. 12-CV-11935, 12-CV-12326, 12-CV-12330 (D. Mass. filed Oct. 17, 2012) (retained by plaintiff - Shore Chan DePumpo LLP). Deposition (x1) and trial experience.
    a. Deposition: 1 (Cumulative total: 10)
    b. Trial/Hearing/court/PTAB appearance: 1 (Cumulative total: 5)
        i. ITC trial appearance: 0 (Cumulative total: 2)
        ii. District Court trial appearance: 1 (Cumulative total: 2)
        iii. PTAB Court trial/deposition appearance: 0 (Cumulative total: 0)
    c. Technology: GaN buffer layers for LEDs, and associated technical marketing, sales and import process into USA.
17. Active case work: 3Q2015 to 3Q2016; *LG Elecs. Inc. v. Toshiba Samsung Storage Tech. Corp.*, No. 12-CV-1063 (D. Del. filed Aug. 22, 2012) and IPR2015-01659 (PTAB filed Jul. 31st 2015 (retained by plaintiff – DLA Piper & Nixon Law). IPR deposition (i.e. trial) experience (x1).
    a. Deposition: 1 (Cumulative total: 11)
    b. Trial/Hearing/court/PTAB appearance: 0 (Cumulative total: 6)
        i. ITC trial appearance: 0 (Cumulative total: 2)
        ii. District Court trial appearance: 0 (Cumulative total: 2)
        iii. PTAB Court trial/deposition appearance: 1 (Cumulative total: 1)
    c. Technology: Optical storage using laser diodes, photodetectors and optical materials
18. Active case work: 3Q2015 to 3Q2016; *LG Elecs. Inc. v. Toshiba Samsung Storage Tech. Corp.*, No. 12-CV-1063 (D. Del. filed Aug. 22, 2012) and IPR2015-01642 (PTAB filed Jul. 30th 2015) (retained by plaintiff – DLA Piper & Nixon Law).
    a. Deposition: 0 (Cumulative total: 11)
    b. Trial/Hearing/court/PTAB appearance: 0 (Cumulative total: 6)
        i. ITC trial appearance: 0 (Cumulative total: 2)
        ii. District Court trial appearance: 0 (Cumulative total: 2)
        iii. PTAB Court trial/deposition appearance: 0 (Cumulative total: 1)
    c. IPR/PTAB trial/deposition: 0 (Cumulative total: 1)
    d. Technology: Optical storage using laser diodes, photodetectors and optical materials
19. Active case work: 3Q2015 to 3Q2016; *LG Elecs. Inc. v. Toshiba Samsung Storage Tech Corp.*, IPR2016-01677 (PTAB filed Aug. 24th 2016 (retained by plaintiff – DLA Piper & Nixon Law).
    a. Deposition: 0 (Cumulative total: 11)
    b. Trial/Hearing/court/PTAB appearance: 0 (Cumulative total: 6)
        i. ITC trial appearance: 0 (Cumulative total: 2)
        ii. District Court trial appearance: 0 (Cumulative total: 2)

Professor (Dr. Dr.) Michael S. Lebby, B. Eng. (Hons), MBA, Ph.D., D. Eng, Fellow NAI, IEEE, Optica (OSA); C. Eng.
1 Hawthorne St., unit 25a, San Francisco, CA 94105, USA; mobile +1 717 839 7078; drmlebby@gmail.com

iii. PTAB Court trial/deposition appearance: 0 (Cumulative total: 1)
c. Technology: Optical storage using laser diodes, photodetectors and optical materials

20. Active case work: 3Q2015 to 3Q2016; *LG Elecs. Inc. v. Toshiba Samsung Storage Tech. Corp.*, IPR2015-01678 (PTAB filed Aug. 24th 2016) (retained by plaintiff – DLA Piper & Nixon Law).
    a. Deposition: 0 (Cumulative total: 11)
    b. Trial/Hearing/court/PTAB appearance: 0 (Cumulative total: 6)
        i. ITC trial appearance: 0 (Cumulative total: 2)
        ii. District Court trial appearance: 0 (Cumulative total: 2)
        iii. PTAB Court trial/deposition appearance: 0 (Cumulative total: 1)
    c. Technology: Optical storage using laser diodes, photodetectors and optical materials
21. Active case work: 3Q2015 to 3Q2016; *LG Elecs. Inc. v. Toshiba Samsung Storage Tech. Corp.*, IPR2015-01644 (PTAB filed Jul. 30th 2015) (retained by plaintiff – DLA Piper & Nixon Law).
    a. Deposition: 0 (Cumulative total: 11)
    b. Trial/Hearing/court/PTAB appearance: 0 (Cumulative total: 6)
        i. ITC trial appearance: 0 (Cumulative total: 2)
        ii. District Court trial appearance: 0 (Cumulative total: 2)
        iii. PTAB Court trial/deposition appearance: 0 (Cumulative total: 1)
    c. Technology: Optical storage using laser diodes, photodetectors and optical materials
22. Active case work: 3Q2015 to 3Q2016; *LG Elecs. Inc. v. Toshiba Samsung Storage Tech. Corp.*, IPR2015-01653 (PTAB filed Jul. 31st 2015) (retained by plaintiff – DLA Piper & Nixon Law).
    a. Deposition: 0 (Cumulative total: 11)
    b. Trial/Hearing/court/PTAB appearance: 0 (Cumulative total: 6)
        i. ITC trial appearance: 0 (Cumulative total: 2)
        ii. District Court trial appearance: 0 (Cumulative total: 2)
        iii. PTAB Court trial/deposition appearance: 0 (Cumulative total: 1)
    c. Technology: Optical storage using laser diodes, photodetectors and optical materials
23. Active case work: 3Q2015; *Heptagon* Pre-litigation IPR petition; (retained by plaintiff – Proskaurer Rose LLP).
    a. Deposition: 0 (Cumulative total: 11)
    b. Trial/Hearing/court/PTAB appearance: 0 (Cumulative total: 6)
        i. ITC trial appearance: 0 (Cumulative total: 2)
        ii. District Court trial appearance: 0 (Cumulative total: 2)
        iii. PTAB Court trial/deposition appearance: 0 (Cumulative total: 1)
    c. Technology: Proximity sensors using LEDs, photodetectors and innovative semiconductor packaging.
24. Active case work: 1Q2016 to 2Q2017; *Dentsply v. Am. Orthodontics Inc.,* No. 15-CV-1706 (D. Pa. filed Sept. 1, 2015) and IPR2016-01652 (PTAB filed Aug. 19th 2016) (retained by defendant – Godfrey Kahn LLP). IPR deposition (x1) experience.
    a. Deposition: 1 (Cumulative total: 12)
    b. Trial/Hearing/court/PTAB appearance: 0 (Cumulative total: 7)
        i. ITC trial appearance: 0 (Cumulative total: 2)
        ii. District Court trial appearance: 0 (Cumulative total: 2)
        iii. PTAB Court trial/deposition appearance: 1 (Cumulative total: 2)
    c. Technology: High power lasers (YAG, CO2) to engrave and scribe dental orthodontic brackets.
25. Active case work: 2Q2016 to 2Q2017; *Koninklijke Philips N.V. v. Elect-tech Int'l (H.K.),* No. 14-CV-2737 (N.D. Cal. filed Aug. 12, 2015) (retained by plaintiff – Reed Smith LLP).
    a. Deposition: 0 (Cumulative total: 12)
    b. Trial/Hearing/court/PTAB appearance: 0 (Cumulative total: 7)
        i. ITC trial appearance: 0 (Cumulative total: 2)
        ii. District Court trial appearance: 0 (Cumulative total: 2)
        iii. PTAB Court trial/deposition appearance: 0 (Cumulative total: 2)
    c. Technology: Trade secret and misappropriation of trade secrets for: MOCVD epitaxial growth techniques for high power GaN/InGaN LED technology, luminaires, modules and packaging.
26. Active case work: 2Q2016 to 4Q2016; *Bluestone Innovations llc. v. E. Mishan & Co. Inc.,* Pre-litigation IP Case No. TBD; (retained by defendant - Notaro, Michalos, & Zaccaria P.C.).
    a. Deposition: 0 (Cumulative total: 12)
    b. Trial/Hearing/court/PTAB appearance: 0 (Cumulative total: 7)
        i. ITC trial appearance: 0 (Cumulative total: 2)
        ii. District Court trial appearance: 0 (Cumulative total: 2)
        iii. PTAB Court trial/deposition appearance: 0 (Cumulative total: 2)
    c. Technology: GaN/InGaN LEDs on structured substrates with reverse engineering laboratory analysis.
27. Active case work: 3Q2016-1Q2017; *511 Innovations Inc. v. HTC Am., Inc.*, No. 15-CV-1524 (E.D. Tex. Filed June 30, 2016) (retained by plaintiff – The Davis Firm). Deposition (x2)
    a. Deposition: 2 (Cumulative total: 14)
    b. Trial/Hearing/court/PTAB appearance: 0 (Cumulative total: 7)
        i. ITC trial appearance: 0 (Cumulative total: 2)

Professor (Dr. Dr.) Michael S. Lebby, B. Eng. (Hons), MBA, Ph.D., D. Eng, Fellow NAI, IEEE, Optica (OSA); C. Eng.
1 Hawthorne St., unit 25a, San Francisco, CA 94105, USA; mobile +1 717 839 7078; drmlebby@gmail.com

ii. District Court trial appearance: 0 (Cumulative total: 2)
iii. PTAB Court trial/deposition appearance: 0 (Cumulative total: 2)
c. Technology: Proximity sensors for mobile phones.

28. Active case work: 3Q2016-4Q2016; *Mellanox Techs. Ltd. v. Methode Elecs. Inc.,* No. 15-CV-3730 (N.D. Cal. filed Aug. 16, 2015) (retained by plaintiff – Alston & Bird).
    a. Deposition: 0 (Cumulative total: 14)
    b. Trial/Hearing/court/PTAB appearance: 0 (Cumulative total: 7)
        i. ITC trial appearance: 0 (Cumulative total: 2)
        ii. District Court trial appearance: 0 (Cumulative total: 2)
        iii. PTAB Court trial/deposition appearance: 0 (Cumulative total: 2)
    c. Technology: Fiber optic transceiver modules.
29. Active case work: 4Q2016-1Q2017; *Novanta Inc., v Iradion Inc*., No. 15-CV-01033 (D. Del. filed Nov. 9, 2015) (retained by defendant – Barnes and Thornburg LLP).
    a. Deposition: 0 (Cumulative total: 14)
    b. Trial/Hearing/court/PTAB appearance: 0 (Cumulative total: 7)
        i. ITC trial appearance: 0 (Cumulative total: 2)
        ii. District Court trial appearance: 0 (Cumulative total: 2)
        iii. PTAB Court trial/deposition appearance: 0 (Cumulative total: 2)
    c. Technology: High power gas laser design and operation.
30. Active case work: 1Q2017-1Q2017; *Optolum Inc., v Cree Inc*., No. 16-CV-03828; (D. Az. filed Nov. 3, 2016) (retained by defendant – Jones Day).
    a. Deposition: 0 (Cumulative total: 14)
    b. Trial/Hearing/court/PTAB appearance: 0 (Cumulative total: 7)
        i. ITC trial appearance: 0 (Cumulative total: 2)
        ii. District Court trial appearance: 0 (Cumulative total: 2)
        iii. PTAB Court trial/deposition appearance: 0 (Cumulative total: 2)
    c. Technology: LED packaging for illumination. LED luminaires.
31. Active case work: 1Q2017-4Q2017; *Polygroup Macau Ltd (BVI)., v Willlis Electric Co., Ltd.,* 15-CV-00552 (W.D. NC. Filed: Apr 21st 2016), (retained by plaintiff - Troutman Sanders LLP). Deposition experience (x2)
    a. Deposition: 2 (Cumulative total: 16)
    b. Trial/Hearing/court/PTAB appearance: 0 (Cumulative total: 8)
        i. ITC trial appearance: 0 (Cumulative total: 2)
        ii. District Court trial appearance: 0 (Cumulative total: 2)
        iii. PTAB Court trial/deposition appearance: 1 (Cumulative total: 3)
    c. Technology: Electrical connector, IC, and LED light product design including luminaires.
32. Active case work: 1Q2017-4Q2017; *Polygroup Macau Ltd (BVI)., v Willlis Electric Co., Ltd.,* IPR2017-00309 (PTAB filed Nov. 21st 2017), (retained by plaintiff - Troutman Sanders LLP).
    a. Deposition: 0 (Cumulative total: 16)
    b. Trial/Hearing/court/PTAB appearance: 0 (Cumulative total: 8)
        i. ITC trial appearance: 0 (Cumulative total: 2)
        ii. District Court trial appearance: 0 (Cumulative total: 2)
        iii. PTAB Court trial/deposition appearance: 0 (Cumulative total: 3)
    c. Technology: Electrical connector, IC, and LED light product design including luminaires.
33. Active case work: 1Q2017-4Q2017; *Polygroup Macau Ltd (BVI)., v Willlis Electric Co., Ltd.,* IPR2017-00330 (PTAB filed Nov. 24th 2017), (retained by plaintiff - Troutman Sanders LLP).
    a. Deposition: 0 (Cumulative total: 16)
    b. Trial/Hearing/court/PTAB appearance: 0 (Cumulative total: 8)
        i. ITC trial appearance: 0 (Cumulative total: 2)
        ii. District Court trial appearance: 0 (Cumulative total: 2)
        iii. PTAB Court trial/deposition appearance: 0 (Cumulative total: 3)
    c. Technology: Electrical connector, IC, and LED light product design including luminaires.
34. Active case work: 1Q2017-4Q2017; *Polygroup Macau Ltd (BVI)., v Willlis Electric Co., Ltd.,* IPR2017-00331 (PTAB filed Nov. 24th 2017), (retained by plaintiff - Troutman Sanders LLP).
    a. Deposition: 0 (Cumulative total: 16)
    b. Trial/Hearing/court/PTAB appearance: 0 (Cumulative total: 8)
        i. ITC trial appearance: 0 (Cumulative total: 2)
        ii. District Court trial appearance: 0 (Cumulative total: 2)
        iii. PTAB Court trial/deposition appearance: 0 (Cumulative total: 3)
    c. Technology: Electrical connector, IC, and LED light product design including luminaires.
35. Active case work: 1Q2017-4Q2017; *Polygroup Macau Ltd (BVI)., v Willlis Electric Co., Ltd.,* IPR2017-00332 (PTAB filed Nov. 25th 2017), (retained by plaintiff - Troutman Sanders LLP).
    a. Deposition: 0 (Cumulative total: 16)
    b. Trial/Hearing/court/PTAB appearance: 0 (Cumulative total: 8)
        i. ITC trial appearance: 0 (Cumulative total: 2)

Professor (Dr. Dr.) Michael S. Lebby, B. Eng. (Hons), MBA, Ph.D., D. Eng, Fellow NAI, IEEE, Optica (OSA); C. Eng.
1 Hawthorne St., unit 25a, San Francisco, CA 94105, USA; mobile +1 717 839 7078; drmlebby@gmail.com

ii. District Court trial appearance: 0 (Cumulative total: 2)
iii. PTAB Court trial/deposition appearance: 0 (Cumulative total: 3)
c. Technology: Electrical connector, IC, and LED light product design including luminaires.

36. Active case work: 1Q2017-4Q2017; *Polygroup Macau Ltd (BVI)., v Willlis Electric Co., Ltd.,* IPR2017-00334 (PTAB filed Nov. 25th 2017), (retained by plaintiff - Troutman Sanders LLP).
    a. Deposition: 0 (Cumulative total: 16)
    b. Trial/Hearing/court/PTAB appearance: 0 (Cumulative total: 8)
        i. ITC trial appearance: 0 (Cumulative total: 2)
        ii. District Court trial appearance: 0 (Cumulative total: 2)
        iii. PTAB Court trial/deposition appearance: 0 (Cumulative total: 3)
    c. Technology: Electrical connector, IC, and LED light product design including luminaires.
37. Active case work: 1Q2017-4Q2017; *Polygroup Macau Ltd (BVI)., v Willlis Electric Co., Ltd.,* IPR2017-00335 (PTAB filed Nov. 25th 2017), (retained by plaintiff - Troutman Sanders LLP).
    a. Deposition: 0 (Cumulative total: 16)
    b. Trial/Hearing/court/PTAB appearance: 0 (Cumulative total: 8)
        i. ITC trial appearance: 0 (Cumulative total: 2)
        ii. District Court trial appearance: 0 (Cumulative total: 2)
        iii. PTAB Court trial/deposition appearance: 0 (Cumulative total: 3)
    c. Technology: Electrical connector, IC, and LED light product design including luminaires.
38. Active case work: 1Q2017-4Q2017; *Macom Technology Solutions Holdings Inc., and Nitronex, LLC., v. Infineon Technologies AG and Infineon Technologies North American Corp.*, 16-CV-02859 (C.D. Ca. filed Apr 26, 2016) (retained by plaintiff – Baker Botts LLP).
    a. Deposition: 0 (Cumulative total: 16)
    b. Trial/Hearing/court/PTAB appearance: 0 (Cumulative total: 8)
        i. ITC trial appearance: 0 (Cumulative total: 2)
        ii. District Court trial appearance: 0 (Cumulative total: 2)
        iii. PTAB Court trial/deposition appearance: 0 (Cumulative total: 3)
    c. Technology: High performance GaN based RF FET device design and operation.
39. Active case work: 1Q2017-1Q2017; *Quanergy Systems, Inc. v. Velodyne LiDAR, Inc.* (16-cv-05251; N.D. Ca. filed: Sep 13th 2016 (retained by plaintiff Velodyne) - Latham & Watkins LLP
    a. Deposition: 0 (Cumulative total: 16)
    b. Trial/Hearing/court/PTAB appearance: 0 (Cumulative total: 8)
        i. ITC trial appearance: 0 (Cumulative total: 2)
        ii. District Court trial appearance: 0 (Cumulative total: 2)
        iii. PTAB Court trial/deposition appearance: 0 (Cumulative total: 3)
    c. Technology: Laser/photodetector-based LIDAR design and operation for self-driving vehicles.
40. Active case work: 1Q2017-2Q2017; *The Chamberlain Group Inc., v. Techtronic Industries Co., Ltd, Techtronic Industries North America et al.,* Challenge to U.S Patent No. 7,862,209 (retained by plaintiff – The Chamberlain Group) – Morgan, Lewis & Brockius, LLP.
    a. Deposition: 0 (Cumulative total: 16)
    b. Trial/Hearing/court/PTAB appearance: 0 (Cumulative total: 8)
        i. ITC trial appearance: 0 (Cumulative total: 2)
        ii. District Court trial appearance: 0 (Cumulative total: 2)
        iii. PTAB Court trial/deposition appearance: 0 (Cumulative total: 3)
    c. Technology: LED based luminaire design for lighting.
41. Active case work: 1Q2017-1Q2018; *Uber Technologies Inc., Ottomottto LLC., Otto Trucking LLC., v. Waymo LLC (Google),* 17-CV-00939 (N.D. Ca filed: Mar 10th, 2017), (retained by defendant Uber Technologies Inc.) – Morrison and Foerster LLP. Deposition experience (x3) and trial experience (case settled at trial).
    a. Deposition: 3 (Cumulative total: 19)
    b. Trial/Hearing/court/PTAB appearance: 1 (Cumulative total: 9)
        i. ITC trial appearance: 0 (Cumulative total: 2)
        ii. District Court trial appearance: 1 (Cumulative total: 3)
        iii. PTAB Court trial/deposition appearance: 0 (Cumulative total: 3)
    c. Technology: Optical and electrical device, optics, and package designs for LIDAR based self-driving vehicles.
42. Active case work: 2Q2017-2Q2017; *Heptagon v. ST Mircoelectronics* IPR petition; (retained by plaintiff Heptagon) – Proskaurer Rose LLP).
    a. Deposition: 0 (Cumulative total: 19)
    b. Trial/Hearing/court/PTAB appearance: 0 (Cumulative total: 9)
        i. ITC trial appearance: 0 (Cumulative total: 2)
        ii. District Court trial appearance: 0 (Cumulative total: 3)
        iii. PTAB Court trial/deposition appearance: 0 (Cumulative total: 3)
    c. Technology: Optoelectronic based proximity sensors using LEDs and photodetectors.

Professor (Dr. Dr.) Michael S. Lebby, B. Eng. (Hons), MBA, Ph.D., D. Eng, Fellow NAI, IEEE, Optica (OSA); C. Eng.
1 Hawthorne St., unit 25a, San Francisco, CA 94105, USA; mobile +1 717 839 7078; drmlebby@gmail.com

43. Active case work: 2Q2017-2Q2018; *AT&T Inc., v. Sycamore Holdings LLC.,* 16-CV-00588 (E. D. Tx filed: Jun 6th 2016); (retained by defendant AT&T Inc.) - Kirkland and Ellis LLP. Deposition experience (x1)
    a. Deposition: 1 (Cumulative total: 20)
    b. Trial/Hearing/court/PTAB appearance: 0 (Cumulative total: 9)
        i. ITC trial appearance: 0 (Cumulative total: 2)
        ii. District Court trial appearance: 0 (Cumulative total: 3)
        iii. PTAB Court trial/deposition appearance: 0 (Cumulative total: 3)
    c. Technology: Coding designs of optical digital signals for high performance optical networks.
44. Active case work: 2Q2017 – 4Q2017; *Clearfield Inc., v. CommScope, ADC, Tyco, and TE Connectivity,* 17-CV-00307 (D.C. Minn. filed Jan 31st 2017); (retained by defendant Clearfield, Inc.) – Pepper Hamilton LLP
    a. Deposition: 0 (Cumulative total: 20)
    b. Trial/Hearing/court/PTAB appearance: 0 (Cumulative total: 9)
        i. ITC trial appearance: 0 (Cumulative total: 2)
        ii. District Court trial appearance: 0 (Cumulative total: 3)
        iii. PTAB Court trial/deposition appearance: 0 (Cumulative total: 3)
    c. Technology: Fiber optic connectors, panels, and distribution switches using optoelectronic components.
45. Active case work: 2Q2017 – 4Q2017; *Clearfield Inc., v. CommScope, ADC, Tyco, and TE Connectivity,* IPR2017-02122 (PTAB filed Sep. 15th 2017); (retained by defendant Clearfield, Inc.) – Pepper Hamilton LLP
    a. Deposition: 0 (Cumulative total: 20)
    b. Trial/Hearing/court/PTAB appearance: 0 (Cumulative total: 9)
        i. ITC trial appearance: 0 (Cumulative total: 2)
        ii. District Court trial appearance: 0 (Cumulative total: 3)
        iii. PTAB Court trial/deposition appearance: 0 (Cumulative total: 3)
    c. Technology: Fiber optic connectors, panels, and distribution switches using optoelectronic components.
46. Active case work: 2Q2017 – 4Q2017; *Clearfield Inc., v. CommScope, ADC, Tyco, and TE Connectivity,* IPR2018-00003 (PTAB filed Oct. 6th 2017); (retained by defendant Clearfield, Inc.) – Pepper Hamilton LLP
    a. Deposition: 0 (Cumulative total: 20)
    b. Trial/Hearing/court/PTAB appearance: 0 (Cumulative total: 9)
        i. ITC trial appearance: 0 (Cumulative total: 2)
        ii. District Court trial appearance: 0 (Cumulative total: 3)
        iii. PTAB Court trial/deposition appearance: 0 (Cumulative total: 3)
    c. Technology: Fiber optic connectors, panels, and distribution switches using optoelectronic components.
47. Active case work: 2Q2017 – 4Q2017; *Clearfield Inc., v. CommScope, ADC, Tyco, and TE Connectivity,* IPR2018-00154 (PTAB filed Nov. 7th 2017); (retained by defendant Clearfield, Inc.) – Pepper Hamilton LLP
    a. Deposition: 0 (Cumulative total: 20)
    b. Trial/Hearing/court/PTAB appearance: 0 (Cumulative total: 9)
        i. ITC trial appearance: 0 (Cumulative total: 2)
        ii. District Court trial appearance: 0 (Cumulative total: 3)
        iii. PTAB Court trial/deposition appearance: 0 (Cumulative total: 3)
    c. Technology: Fiber optic connectors, panels, and distribution switches using optoelectronic components.
48. Active case work: 4Q2016-2Q2017; *Antunes Inc.,* Pre-litigation IP patent review; Case No. TBD; (retained by plaintiff – Antunes Inc. and Chapman Spingola LLP).
    a. Deposition: 0 (Cumulative total: 20)
    b. Trial/Hearing/court/PTAB appearance: 0 (Cumulative total: 9)
        i. ITC trial appearance: 0 (Cumulative total: 2)
        ii. District Court trial appearance: 0 (Cumulative total: 3)
        iii. PTAB Court trial/deposition appearance: 0 (Cumulative total: 3)
    c. Technology: High power grating surface emitter laser diodes, and associated packaging and device design for laser-based cooking ovens.
49. Active case work: 1Q2017-2Q2017; *Core Optical Technologies LLC. v. Fujitsu Network Communications, Inc.,* 16-CV-00437 (C. D. Ca filed: Mar 7th 2016); (retained by defendant Fujitsu Network Communications) – Morrison & Foerster LLP.
    a. Deposition: 0 (Cumulative total: 20)
    b. Trial/Hearing/court/PTAB appearance: 0 (Cumulative total: 9)
        i. ITC trial appearance: 0 (Cumulative total: 2)
        ii. District Court trial appearance: 0 (Cumulative total: 3)
        iii. PTAB Court trial/deposition appearance: 0 (Cumulative total: 3)
    c. Technology: Fiber optic based optical communications for coherent technologies
50. Active case work: 3Q2017-4Q2018; *Oyster Optics LLC v. Coriant America, et al*, 16-CV-01302 (E. D. Tx filed: Nov 24th 2016); (retained by plaintiff Oyster Optics LLC) – Russ August & Kabat LLP.

Professor (Dr. Dr.) Michael S. Lebby, B. Eng. (Hons), MBA, Ph.D., D. Eng, Fellow NAI, IEEE, Optica (OSA); C. Eng.
1 Hawthorne St., unit 25a, San Francisco, CA 94105, USA; mobile +1 717 839 7078; drmlebby@gmail.com

a. Deposition: 1 (Cumulative total: 21)
b. Trial/Hearing/court/PTAB appearance: 0 (Cumulative total: 9)
    i. ITC trial appearance: 0 (Cumulative total: 2)
    ii. District Court trial appearance: 0 (Cumulative total: 3)
    iii. PTAB Court trial/deposition appearance: 0 (Cumulative total: 3)
c. Technology: Fiber optic based optoelectronic semiconductor component design and operation.

51. Active case work: 3Q2017-4Q2018; *Oyster Optics LLC v. Infinera, Alcatel-Lucent, Fujitsu, Cisco Systems, Huawei,* 16-CV-01295, 16-CV-01297, 16-CV-01299, 16-CV-01301, 16-CV-01303 (E. D. Tx filed: Nov 24th 2016); (retained by plaintiff Oyster Optics LLC) – Russ August & Kabat LLP. Deposition experience (x1).
    a. Deposition: 1 (Cumulative total: 22)
    b. Trial/Hearing/court/PTAB appearance: 0 (Cumulative total: 9)
        i. ITC trial appearance: 0 (Cumulative total: 2)
        ii. District Court trial appearance: 0 (Cumulative total: 3)
        iii. PTAB Court trial/deposition appearance: 0 (Cumulative total: 3)
    c. Technology: Fiber optic based optoelectronic semiconductor component design and operation. Including both direct detect and coherent communications, and encoding techniques such as PSK, QPSK, AM, FM etc.
52. Active case work: 3Q2017-4Q2017; *Olympus*, Pre-litigation IP and Due Diligence; Case No. TBD; (retained by plaintiff – Olympus and Fish & Richardson P.C.)
    a. Deposition: 0 (Cumulative total: 22)
    b. Trial/Hearing/court/PTAB appearance: 0 (Cumulative total: 9)
        i. ITC trial appearance: 0 (Cumulative total: 2)
        ii. District Court trial appearance: 0 (Cumulative total: 3)
        iii. PTAB Court trial/deposition appearance: 0 (Cumulative total: 3)
    c. Technology: High volume, low cost optical lens and optics technology.
53. Active case work: 3Q2017-1Q2018; *Honeywell International, Inc et al v. Code Corporation et al.*, ITC No 337-TA-1061 (filed Jun 28th 2017), "Certain barcode readers, scan engines, products containing the same, and components thereof," (retained by respondent – Honeywell and Alston and Bird LLP
    a. Deposition: 1 (Cumulative total: 23)
    b. Trial/Hearing/court/PTAB appearance: 0 (Cumulative total: 9)
        i. ITC trial appearance: 0 (Cumulative total: 2)
        ii. District Court trial appearance: 0 (Cumulative total: 3)
        iii. PTAB Court trial/deposition appearance: 0 (Cumulative total: 3)
    c. Technology: Bar-code scanners and associated optical/optoelectronic component performance and operation.
54. Active case work: 4Q2017-1Q2019; *Godo Kaisha IP Bridge 1 v. Intel Corp.*, 17-CV-00676 (filed Sep 29th 2017), (retained by plaintiff – Godo Kaisha IP Bridge 1) - Ropes and Gray, LLP.
    a. Deposition: 0 (Cumulative total: 23)
    b. Trial/Hearing/court/PTAB appearance: 0 (Cumulative total: 9)
        i. ITC trial appearance: 0 (Cumulative total: 2)
        ii. District Court trial appearance: 0 (Cumulative total: 3)
        iii. PTAB Court trial/deposition appearance: 0 (Cumulative total: 3)
    c. Technology: Fabrication, design, and reverse engineering of silicon-based FET ICs.
55. Active case work: 4Q2017-3Q2018; *Maxim Integrated Products, Inc. and Volterra Semiconductor LLC., v. Silicon Mitus Inc., and Silicon Mitus Technology Inc.*, 17-CV-03507 (N. D. Ca: filed Jun 16th 2017), (retained by defendant Silicon Mitus) – Pillsbury Winthrop Shaw Pittman, LLP. (Deposition x1 and trial experience x1)
    a. Deposition: 1 (Cumulative total: 24)
    b. Trial/Hearing/court/PTAB appearance: 1 (Cumulative total: 10)
        i. ITC trial appearance: 0 (Cumulative total: 2)
        ii. District Court trial appearance: 1 (Cumulative total: 4)
        iii. PTAB Court trial/deposition appearance: 0 (Cumulative total: 3)
    c. Technology: Fabrication, design, characterization, and packaging of silicon-based FET ICs for power applications
56. Active case work: 2Q2018-3Q2018; *Cree, Inc., v. Document Security Systems Inc.,* 17-CV-4263 (C.D. Ca filed: Apr 17th 2017), (retained by defendant Cree Inc.) - Jones Day, LLP
    a. Deposition: 0 (Cumulative total: 24)
    b. Trial/Hearing/court/PTAB appearance: 0 (Cumulative total: 10)
        i. ITC trial appearance: 0 (Cumulative total: 2)
        ii. District Court trial appearance: 0 (Cumulative total: 4)
        iii. PTAB Court trial/deposition appearance: 0 (Cumulative total: 3)
    c. Technology: Design and packaging of high brightness GaN based LEDs for luminaires.
57. Active case work: 2Q2018-2Q2018; Weisen v., Ram Telecom International (RTI)., CGC-16-554331 (Sup Ca: filed 3rd May 2017) (retained by plaintiff Weisen, J) - Yetter Coleman, LLP. Deposition experience (x1) and trial experience (x1).

Professor (Dr. Dr.) Michael S. Lebby, B. Eng. (Hons), MBA, Ph.D., D. Eng, Fellow NAI, IEEE, Optica (OSA); C. Eng.
1 Hawthorne St., unit 25a, San Francisco, CA 94105, USA; mobile +1 717 839 7078; drmlebby@gmail.com

a. Deposition: 1 (Cumulative total: 25)
b. Trial/Hearing/court/PTAB appearance: 1 (Cumulative total: 11)
    i. ITC trial appearance: 0 (Cumulative total: 2)
    ii. District Court trial appearance: 1 (Cumulative total: 5)
    iii. PTAB Court trial/deposition appearance: 0 (Cumulative total: 3)
c. Technology: Submarine and subsea fiber optic cables: technology, markets, economic impact, and history.

58. Active case work: 2Q2018-3Q2018; *Seoul Semiconductor., v. Document Security Systems Inc.,* 17-CV-00981 (C.D. Ca filed: Apr 17th 2017), (retained by defendant Seoul Semiconductor) - Latham and Watkins LLP
    a. Deposition: 1 (Cumulative total: 26)
    b. Trial/Hearing/court/PTAB appearance: 0 (Cumulative total: 11)
        i. ITC trial appearance: 0 (Cumulative total: 2)
        ii. District Court trial appearance: 0 (Cumulative total: 5)
        iii. PTAB Court trial/deposition appearance: 0 (Cumulative total: 3)
    c. Technology: Design and packaging of high brightness GaN based LEDs for luminaires.
59. Active case work: 3Q2018-4Q2018; *NEC Display Solutions Inc., and NEC Display Solutions of America, Inc., v. Ultravision.,* ITC Case# 337-TA-1114 (filed 24th May 2018), "Certain Modular LED Display Panels and Components Thereof," (retained by respondent Jones Day, LLP)
    a. Deposition: 0 (Cumulative total: 26)
    b. Trial/Hearing/court/PTAB appearance: 0 (Cumulative total: 11)
        i. ITC trial appearance: 0 (Cumulative total: 2)
        ii. District Court trial appearance: 0 (Cumulative total: 5)
        iii. PTAB Court trial/deposition appearance: 0 (Cumulative total: 3)
    c. Technology: Large LED Panels, LED displays, LED modular panel design, LED thermal engineering and color displays for outdoor environments.
60. Active case work: 3Q2018-3Q2018; IFT (Innovative Foundry Technologies) (pre-lit), retained by plaintiff Mintz Levin, Cohen, Ferris, Glovsky, and Popeo PC.)
    a. Deposition: 0 (Cumulative total: 26)
    b. Trial/Hearing/court/PTAB appearance: 0 (Cumulative total: 11)
        i. ITC trial appearance: 0 (Cumulative total: 2)
        ii. District Court trial appearance: 0 (Cumulative total: 5)
        iii. PTAB Court trial/deposition appearance: 0 (Cumulative total: 3)
    c. Technology: CMOS device (inc FinFETs) and IC fabrication techniques at 40, 28, 20, 16nm nodes.
61. Active case work: 4Q2018-2Q2019; *Eidolon Optical LLC., v. Haag-Streit AG.,* IPR2018-01311, (retained by patent owner Eidolon Optical LLC) - McInnes & McLane LLP
    a. Deposition: 0 (Cumulative total: 26)
    b. Trial/Hearing/court/PTAB appearance: 0 (Cumulative total: 11)
        i. ITC trial appearance: 0 (Cumulative total: 2)
        ii. District Court trial appearance: 0 (Cumulative total: 5)
        iii. PTAB Court trial/deposition appearance: 0 (Cumulative total: 3)
    c. Technology: High brightness InGaAlP, GaP, AlGaAs, and GaN/InGaN based LEDs for use in medical instruments
62. Active case work: 3Q2018-3Q2018; *Voxtel Inc., v. Joseph Lachapelle & Luminar Technologies Inc.,* 18-CV-27356 (D. Or. filed: Dec 18th 2017), (retained by plaintiff Voxtel Inc.) - Ater Wynne LLP
    a. Deposition: 0 (Cumulative total: 26)
    b. Trial/Hearing/court/PTAB appearance: 0 (Cumulative total: 11)
        i. ITC trial appearance: 0 (Cumulative total: 2)
        ii. District Court trial appearance: 0 (Cumulative total: 5)
        iii. PTAB Court trial/deposition appearance: 0 (Cumulative total: 3)
    c. Technology: LIDAR optical and electronic component and system technology
63. Active case work: 3Q2018-1Q2019; *Alta Devices, v. LG Electronics Inc.,* 18-CV-00404 (N.D. Ca. filed: May 7th 2018), (retained by defendant LG Electronics Inc.) - Hogan Lovells LLP
    a. Deposition: 0 (Cumulative total: 26)
    b. Trial/Hearing/court/PTAB appearance: 0 (Cumulative total: 11)
        i. ITC trial appearance: 0 (Cumulative total: 2)
        ii. District Court trial appearance: 0 (Cumulative total: 5)
        iii. PTAB Court trial/deposition appearance: 0 (Cumulative total: 3)
    c. Technology: Trade Secrets and misappropriation of trade secrets for: GaAs based solar cell design, fabrication, manufacturing, and device performance
64. Active case work: 3Q2018-3Q18; *Opterna AM Inc., v. Commscope Technologies Inc.,* Pre-litigation preparation, (retained by defendant Opterna AM Inc.) - Sterne Kessler LLP
    a. Deposition: 0 (Cumulative total: 26)
    b. Trial/Hearing/court/PTAB appearance: 0 (Cumulative total: 11)
        i. ITC trial appearance: 0 (Cumulative total: 2)

Professor (Dr. Dr.) Michael S. Lebby, B. Eng. (Hons), MBA, Ph.D., D. Eng, Fellow NAI, IEEE, Optica (OSA); C. Eng.
1 Hawthorne St., unit 25a, San Francisco, CA 94105, USA; mobile +1 717 839 7078; drmlebby@gmail.com

ii. District Court trial appearance: 0 (Cumulative total: 5)
iii. PTAB Court trial/deposition appearance: 0 (Cumulative total: 3)

c. Technology: Fiber optic connectors, panels, and distribution switches using optoelectronic components.

65. Active case work: 4Q2018 – 1Q2019; *U.D. Electronic Corp., v. Pulse Electronics, Inc.,* Preparation for IPR filing: IPR2019-00508 (PTAB filed Dec 26th 2018); and support for 18-CV-00373 (S.D. Ca. filed: Feb 16th 2018) (retained by petitioner U. D. Electronic Corp.) – Procopio, Cory, Hargreaves and Savitch LLP
    a. Deposition: 0 (Cumulative total: 26)
    b. Trial/Hearing/court/PTAB appearance: 0 (Cumulative total: 11)
        i. ITC trial appearance: 0 (Cumulative total: 2)
        ii. District Court trial appearance: 0 (Cumulative total: 5)
        iii. PTAB Court trial/deposition appearance: 0 (Cumulative total: 3)
    c. Technology: Electrical and fiber optic connectors, panels, and distribution switches using both electronic and optoelectronic components.
66. Active case work: 4Q2018 – 1Q2019; *U.D. Electronic Corp., v. Pulse Electronics, Inc.,* Preparation for IPR filing: IPR2019-00515 (PTAB filed Dec 31st 2018); and support for 18-CV-00373 (S.D. Ca. filed: Feb 16th 2018) (retained by petitioner U. D. Electronic Corp.) – Procopio, Cory, Hargreaves and Savitch LLP
    a. Deposition: 0 (Cumulative total: 26)
    b. Trial/Hearing/court/PTAB appearance: 0 (Cumulative total: 11)
        i. ITC trial appearance: 0 (Cumulative total: 2)
        ii. District Court trial appearance: 0 (Cumulative total: 5)
        iii. PTAB Court trial/deposition appearance: 0 (Cumulative total: 3)
    c. Technology: Electrical and fiber optic connectors, panels, and distribution switches using both electronic and optoelectronic components.
67. Active case work: 4Q2018 – 1Q2019; *U.D. Electronic Corp., v. Pulse Electronics, Inc.,* Preparation for IPR filing: IPR2019-00262 (PTAB filed Nov 9th 2018); and support for 18-CV-00373 (S.D. Ca. filed: Feb 16th 2018) (retained by petitioner U. D. Electronic Corp.) – Procopio, Cory, Hargreaves and Savitch LLP
    a. Deposition: 0 (Cumulative total: 26)
    b. Trial/Hearing/court/PTAB appearance: 0 (Cumulative total: 11)
        i. ITC trial appearance: 0 (Cumulative total: 2)
        ii. District Court trial appearance: 0 (Cumulative total: 5)
        iii. PTAB Court trial/deposition appearance: 0 (Cumulative total: 3)
    c. Technology: Electrical and fiber optic connectors, panels, and distribution switches using both electronic and optoelectronic components.
68. Active case work: 4Q2018 – 1Q2019; *U.D. Electronic Corp., v. Pulse Electronics, Inc.,* Preparation for IPR filing: IPR2019-00511 (PTAB filed Dec 28th 2018); and support for 18-CV-00373 (S.D. Ca. filed: Feb 16th 2018) (retained by petitioner U. D. Electronic Corp.) – Procopio, Cory, Hargreaves and Savitch LLP
    a. Deposition: 0 (Cumulative total: 26)
    b. Trial/Hearing/court/PTAB appearance: 0 (Cumulative total: 11)
        i. ITC trial appearance: 0 (Cumulative total: 2)
        ii. District Court trial appearance: 0 (Cumulative total: 5)
        iii. PTAB Court trial/deposition appearance: 0 (Cumulative total: 3)
    c. Technology: Electrical and fiber optic connectors, panels, and distribution switches using both electronic and optoelectronic components.
69. Active case work: 4Q2018 – 1Q2019; *Semiconductor Energy Laboratory Co. Ltd., v. Bluehouse Global Ltd.,* Preparation for IPR filing: IPR2018-01405 (PTAB filed Jul 18th 2018); (retained by patent owner SEL Co Ltd.) – Robinson Intellectual Law Office, P.C. (Counsel represented by Fish and Richardson LLP).
    a. Deposition: 0 (Cumulative total: 26)
    b. Trial/Hearing/court/PTAB appearance: 0 (Cumulative total: 11)
        i. ITC trial appearance: 0 (Cumulative total: 2)
        ii. District Court trial appearance: 0 (Cumulative total: 5)
        iii. PTAB Court trial/deposition appearance: 0 (Cumulative total: 3)
    c. Technology: Semiconductor displays using active matrix LCD and thin film transistor technology. Design, fabrication, and circuit layout.
70. Active case work: 4Q2018 – 1Q2019; *Semiconductor Energy Laboratory Co. Ltd., v. Bluehouse Global Ltd.,* Preparation for IPR filing: IPR2018-01393 (PTAB filed Jul 13th 2018); (retained by patent owner SEL Co Ltd.) – Robinson Intellectual Law Office, P.C. (Counsel represented by Fish and Richardson LLP)
    a. Deposition: 0 (Cumulative total: 26)
    b. Trial/Hearing/court/PTAB appearance: 0 (Cumulative total: 11)
        i. ITC trial appearance: 0 (Cumulative total: 2)
        ii. District Court trial appearance: 0 (Cumulative total: 5)
        iii. PTAB Court trial/deposition appearance: 0 (Cumulative total: 3)
    c. Technology: Semiconductor displays using active matrix LCD and thin film transistor technology. Design and fabrication technology.

Professor (Dr. Dr.) Michael S. Lebby, B. Eng. (Hons), MBA, Ph.D., D. Eng, Fellow NAI, IEEE, Optica (OSA); C. Eng.
1 Hawthorne St., unit 25a, San Francisco, CA 94105, USA; mobile +1 717 839 7078; drmlebby@gmail.com

71. Active case work: 4Q2018 - 1Q2019; *The Sloan Company dba SloanLED, v. Principle Lighting Group, LLC.,* 18-CV-06449 (C.D. Ca. filed: Jul 26th 2018), (retained by defendant Sloan LED.) - Ferguson Case Orr Paterson LLP
    a. Deposition: 0 (Cumulative total: 26)
    b. Trial/Hearing/court/PTAB appearance: 1 (Cumulative total: 12)
        i. ITC trial appearance: 0 (Cumulative total: 2)
        ii. District Court trial appearance: 1 (Cumulative total: 6)
        iii. PTAB Court trial/deposition appearance: 0 (Cumulative total: 3)
    c. Technology: LED lighting, LED luminaires, LED performance, electrical and mechanical design and construction.
72. Active case work: 1Q2019 - 1Q2019; *HTC Corporation, v. Lemire Illumination Technologies.,* 18-CV-00021 (E.D. Tx. filed: Jan 21st 2018), (retained by defendant HTC Corporation) - Perkins Coie LLP
    a. Deposition: 0 (Cumulative total: 26)
    b. Trial/Hearing/court/PTAB appearance: 0 (Cumulative total: 12)
        i. ITC trial appearance: 0 (Cumulative total: 2)
        ii. District Court trial appearance: 0 (Cumulative total: 6)
        iii. PTAB Court trial/deposition appearance: 0 (Cumulative total: 3)
    c. Technology: LEDs for mobile phones
73. Active case work: 1Q2019 - 2Q2019; *Frys Electronics, v. Seoul Semiconductor Co, and Seoul Viosys Co.,,* 2:18-CV-00386-JRG (E. D. Tx. filed: Nov 20th 2018), (retained by defendant Frys Electronics) - Lamkin IP Defense
    a. Deposition: 0 (Cumulative total: 26),
    b. Trial/Hearing/court/PTAB appearance: 0 (Cumulative total: 12)
        i. ITC trial appearance: 0 (Cumulative total: 2)
        ii. District Court trial appearance: 0 (Cumulative total: 6)
        iii. PTAB Court trial/deposition appearance: 0 (Cumulative total: 3)
    c. Technology: LED chips, LED packaging, LED lenses, LED luminaires, backlights, displays, and televisions/monitors
74. Active case work: 2Q2019 – 4Q2019; *Hanwha Q CELLS & Advance Materials Corporation, v. JinkoSolar, LONGi Solar, REC Solar,* ITC 337-TA-1151 (filed: Apr 4th 2019), ("Certain Photovoltaic Cells and Products Containing Same,"), retained by patent owner and plaintiff Hanwha Q CELLS) - Covington and Burling LLP
    a. Deposition: 2 (Cumulative total: 28)
    b. Trial/Hearing/court/PTAB appearance: 0 (Cumulative total: 12)
        i. ITC trial appearance: 0 (Cumulative total: 2)
        ii. District Court trial appearance: 0 (Cumulative total: 6)
        iii. PTAB Court trial/deposition appearance: 0 (Cumulative total: 3)
75. Active case work: 2Q2019-3Q2019; *Hanwha Q CELLS & Advance Materials Corporation, v. JinkoSolar and affiliates,* 19-CV-00450 (D. Del. filed: Jan 21st 2018), (retained by patent owner and plaintiff Hanwha Q CELLS) - Covington and Burling LLP
    a. Deposition: 0 (Cumulative total: 28)
    b. Trial/Hearing/court/PTAB appearance: 0 (Cumulative total: 12)
        i. ITC trial appearance: 0 (Cumulative total: 2)
        ii. District Court trial appearance: 0 (Cumulative total: 6)
        iii. PTAB Court trial/deposition appearance: 0 (Cumulative total: 3)
    c. Technology: Silicon solar cells and materials analysis of passivation layers
76. Active case work: 2Q2019-2Q2019; *Oyster Optics LLC v. Infinera Inc,* 2:18-CV-00206 (E. D. Tx filed: May 15th 2018); (retained by plaintiff Oyster Optics LLC) – Russ August & Kabat LLP.
    a. Deposition: 0 (Cumulative total: 28)
    b. Trial/Hearing/court/PTAB appearance: 0 (Cumulative total: 12)
        i. ITC trial appearance: 0 (Cumulative total: 2)
        ii. District Court trial appearance: 0 (Cumulative total: 6)
        iii. PTAB Court trial/deposition appearance: 0 (Cumulative total: 3)
    c. Technology: Fiber optic based optoelectronic semiconductor component and transceiver design/ operation.
77. Active case work: 2Q2019 – 2Q2019; *Nichia Corporation & Osram Opto Semiconductors Inc., v. Lighting Science Group Corp.,* IPR filing: IPR2019-01259 (PTAB filed Jun 28th 2019); (retained by petitioner Nichia and Osram Opto.) – Shearman and Sterling, LLP
    a. Deposition: 0 (Cumulative total: 28)
    b. Trial/Hearing/court/PTAB appearance: 0 (Cumulative total: 12)
        i. ITC trial appearance: 0 (Cumulative total: 2)
        ii. District Court trial appearance: 0 (Cumulative total: 6)
        iii. PTAB Court trial/deposition appearance: 0 (Cumulative total: 3)
    c. Technology: LED chips, LED packaging and ceramic thermal heat sinking technology.
78. Active case work: 2Q2019 – 3Q2019; *Nichia Corporation v. Lighting Science Group Corp.,* 2:17-CV-08849 (C. D. Ca filed Jul 12th 2017); (retained by defendant Nichia) – Shearman and Sterling, LLP

Professor (Dr. Dr.) Michael S. Lebby, B. Eng. (Hons), MBA, Ph.D., D. Eng, Fellow NAI, IEEE, Optica (OSA); C. Eng.
1 Hawthorne St., unit 25a, San Francisco, CA 94105, USA; mobile +1 717 839 7078; drmlebby@gmail.com

a. Deposition: 0 (Cumulative total: 28)
b. Trial/Hearing/court/PTAB appearance: 0 (Cumulative total: 12)
    i. ITC trial appearance: 0 (Cumulative total: 2)
    ii. District Court trial appearance: 0 (Cumulative total: 6)
    iii. PTAB Court trial/deposition appearance: 0 (Cumulative total: 3)
c. Technology: LED chips, LED packaging and ceramic thermal heat sinking technology

79. Active case work: 3Q2019-3Q2019; *Applied Optoelectronics Inc v. Class Action Lawsuit,* 4:17-CV-02399 (S. D. Tx filed: Mar 6th 2018); (retained by plaintiff Class Action Lawsuit) – Levi and Korsinsky, LLP
    a. Deposition: 0 (Cumulative total: 28)
    b. Trial/Hearing/court/PTAB appearance: 0 (Cumulative total: 12)
        i. ITC trial appearance: 0 (Cumulative total: 2)
        ii. District Court trial appearance: 0 (Cumulative total: 6)
        iii. PTAB Court trial/deposition appearance: 0 (Cumulative total: 3)
    c. Technology: Fiber optic based optoelectronic semiconductor components, transceivers, and sub-systems.
80. Active case work: 3Q2019-3Q2019; *DNA Motor v. Kuen Hwa Traffic Industrial Co.,* 18-CV-05664 (C. D. Ca filed: Jan 15th 2019); (defendant DNA Motor) – Elizabeth Yang, Law and Mediation Office
    a. Deposition: 0 (Cumulative total: 28)
    b. Trial/Hearing/court/PTAB appearance: 0 (Cumulative total: 12)
        i. ITC trial appearance: 0 (Cumulative total: 2)
        ii. District Court trial appearance: 0 (Cumulative total: 6)
        iii. PTAB Court trial/deposition appearance: 0 (Cumulative total: 3)
    c. Technology: LED design patent, and the design of an aftermarket LED based headlight assembly for an automobile.
81. Active case work: 3Q2019 – 1Q2020; *Nichia Corporation, Osram Opto Semiconductors Inc., Philips Lumileds, GE Consumer Lighting, Cree, and Signify v. Lighting Science Group Corp.,* ITC 337-TA-1168 (filed: Apr 30th 2019), ("Certain Light-Emitting-Diode products, systems, and components thereof (III)") (retained by respondents Nichia, Osram Optoelectronics, Philips Lumileds, GE Consumer Lighting, Cree Hong Kong., Signify Corp.) – Shearman and Sterling, LLP
    a. Deposition: 1 (Cumulative total: 29)
    b. Trial/Hearing/court/PTAB appearance: 1 (Cumulative total: 13)
        i. ITC trial appearance: 1 (Cumulative total: 3)
        ii. District Court trial appearance: 0 (Cumulative total: 6)
        iii. PTAB Court trial/deposition appearance: 0 (Cumulative total: 3)
    c. Technology: LED chips, LED packaging and ceramic thermal heat sinking technology (LTCC).
82. Active case work: 4Q2019 – 1Q2020; *Amazon.com Inc, Bed, Bath and Beyond, IKEA, Target, and Walmart Inc., v. Regents of the University of California,* ITC 337-TA-1172 (filed: July 30th 2019), ("Certain Filament Light-Emitting-Diodes and products containing same") (retained by respondents Amazon.com Inc, Bed, Bath and Beyond, IKEA, Target, and Walmart Inc.) – Morrison and Foerster, LLP
    a. Deposition: 2 (Cumulative total: 31)
    b. Trial/Hearing/court/PTAB appearance: 0 (Cumulative total: 13)
        i. ITC trial appearance: 0 (Cumulative total: 3)
        ii. District Court trial appearance: 0 (Cumulative total: 6)
        iii. PTAB Court trial/deposition appearance: 0 (Cumulative total: 3)
    c. Technology: LED chips, LED packaging and light bulb filaments with transparent sub-mounts.
83. Active case work: 4Q2019 – 4Q2019; *U.D. Electronic Corp., v. Pulse Electronics, Inc.,* IPR2019-00511 (PTAB filed Dec 28th 2018), (retained by petitioner U. D. Electronic Corp.) – Procopio, Cory, Hargreaves and Savitch LLP
    a. Deposition: 0 (Cumulative total: 31)
    b. Trial/Hearing/court/PTAB appearance: 0 (Cumulative total: 13)
        i. ITC trial appearance: 0 (Cumulative total: 3)
        ii. District Court trial appearance: 0 (Cumulative total: 6)
        iii. PTAB Court trial/deposition appearance: 0 (Cumulative total: 3)
    c. Technology: Electrical and fiber optic connectors, panels, and distribution switches using both electronic and optoelectronic components.
84. Active case work: 1Q2020 – 2Q2020; *IKEA, v. Regents of the University of California,* ITC 337-TA-1172 (filed: July 30th 2019), ("Certain Filament Light-Emitting-Diodes and products containing same") (retained by respondents IKEA) – Flaster and Greenberg, LLP
    a. Deposition: 2 (Cumulative total: 31)
    b. Trial/Hearing/court/PTAB appearance: 0 (Cumulative total: 13)
        i. ITC trial appearance: 0 (Cumulative total: 3)
        ii. District Court trial appearance: 0 (Cumulative total: 6)
        iii. PTAB Court trial/deposition appearance: 0 (Cumulative total: 3)
    c. Technology: LED chips, LED packaging and light bulb filaments with transparent sub-mounts.

Professor (Dr. Dr.) Michael S. Lebby, B. Eng. (Hons), MBA, Ph.D., D. Eng, Fellow NAI, IEEE, Optica (OSA); C. Eng.
1 Hawthorne St., unit 25a, San Francisco, CA 94105, USA; mobile +1 717 839 7078; drmlebby@gmail.com

85. Active case work: 1Q2020-1Q2020; *Hanwha Solutions Corporation, v. Longi Green Energy, Longi Solar Technology, Longi Trading et al.,* IPR2019-01072 (PTAB filed 13th May 2019), (retained by patent owner Hanwha Solutions Corporation) - Covington and Burling LLP
    a. Deposition: 0 (Cumulative total: 31)
    b. Trial/Hearing/court/PTAB appearance: 0 (Cumulative total: 13)
        i. ITC trial appearance: 0 (Cumulative total: 3)
        ii. District Court trial appearance: 0 (Cumulative total: 6)
        iii. PTAB Court trial/deposition appearance: 0 (Cumulative total: 3)
    c. Technology: Silicon solar cells and materials analysis of passivation layers
86. Active case work: 1Q2020-1Q2020; *Hanwha Solutions Corporation, v. REC Solar Pte. Ltd. and JinkoSolar (U.S.) Inc.* IPR2019-01145 (PTAB filed 6th March 2019), (retained by patent owner Hanwha Solutions Corporation) - Covington and Burling LLP
    a. Deposition: 0 (Cumulative total: 31)
    b. Trial/Hearing/court/PTAB appearance: 0 (Cumulative total: 13)
        i. ITC trial appearance: 0 (Cumulative total: 3)
        ii. District Court trial appearance: 0 (Cumulative total: 6)
        iii. PTAB Court trial/deposition appearance: 0 (Cumulative total: 3)
    c. Technology: Silicon solar cells and materials analysis of passivation layers
87. Active case work: 4Q2019 – 2Q2020; *Viavi Solutions Inc., v Optrontec Inc.,* ITC 337-TA-1187 (filed: 18th November 2019), ("Certain Electronic devices with Optical Filters and Optical Sensor Systems and Components Thereof") (retained by complainant Viavi Solutions Inc.,) – Venable, LLP
    a. Deposition: 0 (Cumulative total: 31)
    b. Trial/Hearing/court/PTAB appearance: 0 (Cumulative total: 13)
        i. ITC trial appearance: 0 (Cumulative total: 3)
        ii. District Court trial appearance: 0 (Cumulative total: 6)
        iii. PTAB Court trial/deposition appearance: 0 (Cumulative total: 3)
    c. Technology: Optical filters and optical sensor systems, design and fabrication of dielectric materials for passband filters in applications such as optical communications, imaging, sensing, medical, automotive.
88. Active case work: 2Q2020 – 4Q2020; *Leviton Manufacturing Co., v. Corning Optical Communications LLC.,* ITC 337-TA-1194 (filed: 19th March 2020), ("Certain High-Density Fiber Optic Equipment and Components Thereof") (retained by respondent Leviton Manufacturing Co.,) – Morrison & Foerster, LLP
    a. Deposition: 1 (Cumulative total: 32)
    b. Trial/Hearing/court/PTAB appearance: 1 (Cumulative total: 14)
        i. ITC trial appearance: 1 (Cumulative total: 4)
        ii. District Court trial appearance: 0 (Cumulative total: 6)
        iii. PTAB Court trial/deposition appearance: 0 (Cumulative total: 3)
    c. Technology: Fiber optic adapters, fiber optic connectors (simplex, duplex, quad, multi-fiber), fiber trays, racks, and fiber cabinet equipment.
    d. Technology: LED chips, LED packaging and light bulb filaments with transparent sub-mounts.
89. Active case work: 2Q2020 – 2Q2020; subject to PO/NDA and engagement letter *xxx v. yyy,* Post Grant Review petition for proceedings (US Patent # zzz), retained by Morrison and Foerster, LLP
    a. Deposition: 0 (Cumulative total: 31)
    b. Trial/Hearing/court/PTAB appearance: 0 (Cumulative total: 14)
        i. ITC trial appearance: 0 (Cumulative total: 4)
        ii. District Court trial appearance: 0 (Cumulative total: 6)
        iii. PTAB Court trial/deposition appearance: 0 (Cumulative total: 3)
    c. Optoelectronics, LEDs, lead frame packaging, optics, optical lenses, GaN (Gallium Nitride), optical transparency
90. Active case work: 1Q2020-3Q2020; *Cellect LLC, v. Samsung Electronics Co., LTD and Samsung Electronics America, Inc.,* IPR2020-00560 (PTAB filed 16th Feb 2020), (retained by patent owner Cellect LLC) – retained by Kramer Levin Naftalis & Frankel LLP
    a. Deposition: 0 (Cumulative total: 32)
    b. Trial/Hearing/court/PTAB appearance: 0 (Cumulative total: 14)
        i. ITC trial appearance: 0 (Cumulative total: 4)
        ii. District Court trial appearance: 0 (Cumulative total: 6)
        iii. PTAB Court trial/deposition appearance: 0 (Cumulative total: 3)
    c. Technology: Silicon CMOS image sensors, drive electronics, smart pixels and CCD technology
91. Active case work: 2Q2020-2Q2020; *Panasonic, v. 3M Innovative Properties Company.,* Preparation for IPR filing, (retained by defendant Panasonic) – retained by Westerman Hattori Daniels & Adrian LLP
    a. Deposition: 0 (Cumulative total: 32)
    b. Trial/Hearing/court/PTAB appearance: 0 (Cumulative total: 14)
        i. ITC trial appearance: 0 (Cumulative total: 4)
        ii. District Court trial appearance: 0 (Cumulative total: 6)

Professor (Dr. Dr.) Michael S. Lebby, B. Eng. (Hons), MBA, Ph.D., D. Eng, Fellow NAI, IEEE, Optica (OSA); C. Eng.
1 Hawthorne St., unit 25a, San Francisco, CA 94105, USA; mobile +1 717 839 7078; drmlebby@gmail.com

iii. PTAB Court trial/deposition appearance: 0 (Cumulative total: 3)

c. Technology: Touch sensor (resistive, optical, and capacitive) technology for mobile displays. Analysis of display, electronic, and optical technologies.

92. Active case work: 2Q2020-3Q2020; *Longi Green Energy Technology Co, Longi Solar Technology Co, Long Solar Technology (H.K., Kuching, Taizhou, Zhejiang, Hefei, US) v. Hanwha Solutions Corporation.*, IPR 2019-01072, (retained by patent owner Hanwha Solutions Corporation) – Quinn Emanuel Urquhart & Sullivan, LLP
    a. Deposition: 1 (Cumulative total: 33)
    b. Trial/Hearing/court/PTAB appearance: 0 (Cumulative total: 16)
        i. ITC trial appearance: 0 (Cumulative total: 4)
        ii. District Court trial appearance: 0 (Cumulative total: 6)
        iii. PTAB Court trial/deposition appearance: 1 (Cumulative total: 5)
    c. Optoelectronics; solar cell design, fabrication, device performance, packaging, and interface issues relating to passivation (both chemical and electric field enhanced).
93. Active case work: 3Q2020-3Q2020; *Oyster Optics LLC v. Ciena Corp,* 4:17-CV-05920 (N. D. CA filed: April 22nd 2020); (retained by plaintiff Oyster Optics LLC) – Russ August & Kabat LLP.
    a. Deposition: 0 (Cumulative total: 33)
    b. Trial/Hearing/court/PTAB appearance: 1 (Cumulative total: 16)
        i. ITC trial appearance: 0 (Cumulative total: 4)
        ii. District Court trial appearance: 0 (Cumulative total: 6)
        iii. PTAB Court trial/deposition appearance: 0 (Cumulative total: 5)
    c. Technology: Fiber optic based optoelectronic semiconductor component design and operation, especially phase shift keying (PSK, QPSK) and phase based coherent communications.
94. Active case work: 3Q2020-2Q2021; *Capella Photonics Inc., v. Infinera Corporation, Tellabs, Tellabs Operations Inc., Coriant American Inc., and Coriant USA Inc., 2*:20-CV-00077 (E. D. TX filed: March 16th 2020); (retained by defendant Infinera Inc.) – Baker Botts LLP.
    a. Deposition: 1 (Cumulative total: 34)
    b. Trial/Hearing/court/PTAB appearance: 0 (Cumulative total: 16)
        i. ITC trial appearance: 0 (Cumulative total: 4)
        ii. District Court trial appearance: 0 (Cumulative total: 6)
        iii. PTAB Court trial/deposition appearance: 0 (Cumulative total: 5)
    c. Technology: Fiber optic wavelength selective switches (WSS), reconfigurable add-drop multiplexors (ROADMs), and their design. Technical issues include polarization, wavelength selection, coupling, mux/demux and operation in optical networks.
95. Active case work: 3Q2020-3Q2020; *Longi Green Energy Technology Co, Longi Solar Technology Co, Long Solar Technology (H.K., Kuching, Taizhou, Zhejiang, Hefei, US) v. Hanwha Solutions Corporation.*, IPR 2020-00353, (retained by patent owner Hanwha Solutions Corporation) – Quinn Emanuel Urquhart & Sullivan, LLP
    a. Deposition: 0 (Cumulative total: 34)
    b. Trial/Hearing/court/PTAB appearance: 0 (Cumulative total: 16)
        i. ITC trial appearance: 0 (Cumulative total: 4)
        ii. District Court trial appearance: 0 (Cumulative total: 6)
        iii. PTAB Court trial/deposition appearance: 0 (Cumulative total: 5)
    c. Optoelectronics: solar cell design, fabrication, device performance, packaging, and interface issues relating to passivation (both chemical and electric field enhanced).
96. Active case work: 3Q2020-2Q2021; *Appotronics Corporation Ltd. v. Delta Electronics Inc., 2*:19-CV-00466 (E. D. Va filed: July 22nd 2020); (retained by defendant Delta Corporation Inc) – Pillsbury Winthorp Shaw Pitman LLP.
    a. Deposition: 1 (Cumulative total: 35)
    b. Trial/Hearing/court/PTAB appearance: 0 (Cumulative total: 16)
        i. ITC trial appearance: 0 (Cumulative total: 4)
        ii. District Court trial appearance: 0 (Cumulative total: 6)
        iii. PTAB Court trial/deposition appearance: 0 (Cumulative total: 5)
    c. Technology: Light projectors for display and the color wheel, phosphor technology, high power visible lasers for projection, and the associated packaging of the modules/projectors for efficient cost design..
97. Active case work: 3Q2020 – 2Q2021; *Ideal Industries Lighting LLC (dba Cree Lighting) v. RAB Lighting Inc.,* ITC 337-TA-1213 (filed: 15th July 2020), ("Certain Light-emitting Diode Products, Fixtures, and Components thereof"), (retained by plaintiff Ideal Industries Lighting LLC (dba Cree Lighting) – Quinn Emanuel Urquhart an Sullivan, LLP
    a. Deposition: 1(Cumulative total: 36)
    b. Trial/Hearing/court/PTAB appearance: 2(x2 oral testimony); (Cumulative total: 18)
        i. ITC trial appearance: 2 (Cumulative total: 6)
        ii. District Court trial appearance: 0 (Cumulative total: 6)
        iii. PTAB Court trial/deposition appearance: 0 (Cumulative total: 5)
    c. Technology: Visible GaN based LEDs and various packaging optical lens designs for directing and re-directing LED light output with applications in street lighting.

Professor (Dr. Dr.) Michael S. Lebby, B. Eng. (Hons), MBA, Ph.D., D. Eng, Fellow NAI, IEEE, Optica (OSA); C. Eng.
1 Hawthorne St., unit 25a, San Francisco, CA 94105, USA; mobile +1 717 839 7078; drmlebby@gmail.com

98. Active case work: 3Q2020-3Q2020; *Cellect LLC, v. Samsung Electronics Co., LTD and Samsung Electronics America, Inc., ex parte* declaration entitled, 'Hand-held computers incorporating reduced area imaging devices', for U.S. Patent 6,982,742 (control number 90/014,453), (retained by patent owner Cellect LLC) – retained by Kramer Levin Naftalis & Frankel LLP
    a. Deposition: 0 (Cumulative total: 36)
    b. Trial/Hearing/court/PTAB appearance: 0 (Cumulative total: 18)
        i. ITC trial appearance: 0 (Cumulative total: 6)
        ii. District Court trial appearance: 0 (Cumulative total: 6)
        iii. PTAB Court trial/deposition appearance: 0 (Cumulative total: 5)
    c. Technology: Hand-held silicon CMOS image sensors, drive electronics, smart pixels and CCD technology. Technical history of CCD v. CMOS image sensors in the 1990s and associated performance criteria.
99. Active case work: 3Q2020-3Q2020; *Cellect LLC, v. Samsung Electronics Co., LTD and Samsung Electronics America, Inc., ex parte* declaration entitled, 'Communication devices incorporating reduced area imaging devices', for U.S. Patent 6,452,626 (control number 90/014,455), (retained by patent owner Cellect LLC) – retained by Kramer Levin Naftalis & Frankel LLP
    a. Deposition: 0 (Cumulative total: 36)
    b. Trial/Hearing/court/PTAB appearance: 0 (Cumulative total: 18)
        i. ITC trial appearance: 0 (Cumulative total: 6)
        ii. District Court trial appearance: 0 (Cumulative total: 6)
        iii. PTAB Court trial/deposition appearance: 0 (Cumulative total: 5)
    c. Technology: Hand-held silicon CMOS image sensors, drive electronics, smart pixels and CCD technology. Technical history of CCD v. CMOS image sensors in the 1990s and associated performance criteria.
100. Active case work: 4Q2020-4Q2020; *Cellect LLC, v. Samsung Electronics Co., LTD and Samsung Electronics America, Inc.,* IPR declaration for U.S. Patent 9,198,565 (IPR2020-00476), (retained by patent owner Cellect LLC) – retained by Kramer Levin Naftalis & Frankel LLP
    a. Deposition: 0 (Cumulative total: 36)
    b. Trial/Hearing/court/PTAB appearance: 0 (Cumulative total: 18)
        i. ITC trial appearance: 0 (Cumulative total: 6)
        ii. District Court trial appearance: 0 (Cumulative total: 6)
        iii. PTAB Court trial/deposition appearance: 0 (Cumulative total: 5)
    c. Technology: Hand-held silicon CMOS image sensors, drive electronics, smart pixels and CCD technology. Technical history of CCD v. CMOS image sensors in the 1990s and associated performance criteria.
101. Active case work: 4Q2020-4Q2020; *Cellect LLC, v. Samsung Electronics Co., LTD and Samsung Electronics America, Inc.,* IPR declaration for U.S. Patent 9,667,896 (IPR2020-00477), (retained by patent owner Cellect LLC) – retained by Kramer Levin Naftalis & Frankel LLP
    a. Deposition: 0 (Cumulative total: 36)
    b. Trial/Hearing/court/PTAB appearance: 0 (Cumulative total: 18)
        i. ITC trial appearance: 0 (Cumulative total: 6)
        ii. District Court trial appearance: 0 (Cumulative total: 6)
        iii. PTAB Court trial/deposition appearance: 0 (Cumulative total: 5)
    c. Technology: Hand-held silicon CMOS image sensors, drive electronics, smart pixels and CCD technology. Technical history of CCD v. CMOS image sensors in the 1990s and associated performance criteria.
102. Active case work: 4Q2020 – 1Q2021; *U.D. Electronic Corp., v. Pulse Electronics, Inc.,* 3:18-CV-00373 (Filed Fed 16th 2018), (retained by petitioner U. D. Electronic Corp.) – retained by defendant Perkins Coie LLP.
    a. Deposition: 1 (Cumulative total: 37)
    b. Trial/Hearing/court/PTAB appearance: 0 (Cumulative total: 18)
        i. ITC trial appearance: 0 (Cumulative total: 6)
        ii. District Court trial appearance: 0 (Cumulative total: 6)
        iii. PTAB Court trial/deposition appearance: 0 (Cumulative total: 5)
    c. Technology: Electrical and fiber optic connectors, panels, and distribution switches using both electronic and optoelectronic components. Noise suppression using EMI between electrical components and connectors.
103. Active case work: 4Q2020-4Q2020; *Cellect LLC, v. Samsung Electronics Co., LTD and Samsung Electronics America, Inc.,* IPR declaration for U.S. Patent 9,186,052 (IPR2020-00512), (retained by patent owner Cellect LLC) – retained by Kramer Levin Naftalis & Frankel LLP
    a. Deposition: 1 (Cumulative total: 38)
    b. Trial/Hearing/court/PTAB appearance: 1 (Cumulative total: 19)
        i. ITC trial appearance: 0 (Cumulative total: 6)
        ii. District Court trial appearance: 0 (Cumulative total: 6)
        iii. PTAB Court trial/deposition appearance: 1 (Cumulative total: 6)

Professor (Dr. Dr.) Michael S. Lebby, B. Eng. (Hons), MBA, Ph.D., D. Eng, Fellow NAI, IEEE, Optica (OSA); C. Eng.
1 Hawthorne St., unit 25a, San Francisco, CA 94105, USA; mobile +1 717 839 7078; drmlebby@gmail.com

c. Technology: Hand-held silicon CMOS image sensors, drive electronics, smart pixels and CCD technology. Technical history of CCD v. CMOS image sensors in the 1990s and associated performance criteria.

104. Active case work: 4Q2020-4Q2020; *Cellect LLC, v. Samsung Electronics Co., LTD and Samsung Electronics America, Inc.,* IPR declaration for U.S. Patent 9,186,052 (IPR2020-00475), (retained by patent owner Cellect LLC) – retained by Kramer Levin Naftalis & Frankel LLP
    a. Deposition: 1 (Cumulative total: 39)
    b. Trial/Hearing/court/PTAB appearance: 1 (Cumulative total: 20)
        i. ITC trial appearance: 0 (Cumulative total: 6)
        ii. District Court trial appearance: 0 (Cumulative total: 6)
        iii. PTAB Court trial/deposition appearance: 1 (Cumulative total: 7)
    c. Technology: Hand-held silicon CMOS image sensors, drive electronics, smart pixels and CCD technology. Technical history of CCD v. CMOS image sensors in the 1990s and associated performance criteria.
105. Active case work: 3Q2020 – 1Q2021; *Huawei Technologies Co. Ltd. v. Verizon Communications, Inc., et al.,* 20-CV-030-JRG (TX E. D. Filed 2nd April 2020), (retained by plaintiff Huawei Technologies Co. Ltd.) – retained by plaintiff Caldwell Cassady Curry P.C.
    a. Deposition: 0 (Cumulative total: 39)
    b. Trial/Hearing/court/PTAB appearance: 0 (Cumulative total: 20)
        i. ITC trial appearance: 0 (Cumulative total: 6)
        ii. District Court trial appearance: 0 (Cumulative total: 6)
        iii. PTAB Court trial/deposition appearance: 0 (Cumulative total: 7)
    c. Technology: Analysis of coding for fiber optic communications, specifically in relation to the standardization process for the Telecommunication Standardization Sector of the International Telecommunications Union ("ITU-T"), including the ITU-T's G.709: Interfaces for the optical transport network standard ("G.709" or "the G.709 Standard"). In particular, the technical issues that relate to OTN hierarchy; functionality of the overhead in support of multi-wavelength optical networks; frame structures, bit rates, and formats for mapping client signals.
106. Active case work: 1Q2021 – 3Q2021; *IKEA et al., v. Regents of the University of California,* ITC 337-TA-1220 (filed: 29th September 2020), ("Certain filament light-emitting diodes and products containing same (II)"), (retained by respondent JDG: IKEA, Global Value Lighting, Signify, Home Depot, GE, Satco) – retained by Flaster Greenberg PC, Kirkland and Ellis, GT Law (Greenberg Traurig), Alston and Bird, Jones Day and Goodwin Law as JDG counsel.
    a. Deposition: 2 (Cumulative total: 41)
    b. Trial/Hearing/court/PTAB appearance: 1 (Cumulative total: 21)
        i. ITC trial appearance: 1 (Cumulative total: 7)
        ii. District Court trial appearance: 0 (Cumulative total: 6)
        iii. PTAB Court trial/deposition appearance: 0 (Cumulative total: 7)
    c. Technology: LED chips, LED packaging and light bulb filaments with transparent sub-mounts.
107. Active case work 4Q2020 – 1Q2021; *Uber Technologies Inc., v. Anthony Scott Levandowski*; Case No. 20-30242 (HLB) and 20-03050 (filed 16th September 2020), retained by defendant Uber Technologies Inc., retained by Jenner and Block LLP.
    a. Deposition: 0 (Cumulative total: 41)
    b. Trial/Hearing/court/PTAB appearance: 0 (Cumulative total: 21)
        i. ITC trial appearance: 0 (Cumulative total: 7)
        ii. District Court trial appearance: 0 (Cumulative total: 6)
        iii. PTAB Court trial/deposition appearance: 0 (Cumulative total: 7)
    c. Technology: LIDAR technology for motor vehicles that includes fiber amplifiers, LIDAR hardware, laser diodes, photodetectors, fiber links, and free space communications.
108. Active case work: 1Q2021 – 3Q2021; *CoSemi Technologies, v. Everpro Technologies, Fibbr Technologies, Logitech, and Facebook Technologies,* ITC 337-TA-1233 (filed: 29th October 2020), "Certain active optical cables and products containing same", (retained by claimant Cosemi Technologies) – retained by Rutan & Tucker LLP.
    a. Deposition: 1 (Cumulative total: 42)
    b. Trial/Hearing/court/PTAB appearance: 0 (Cumulative total: 21)
        i. ITC trial appearance: 0 (Cumulative total: 7)
        ii. District Court trial appearance: 0 (Cumulative total: 6)
        iii. PTAB Court trial/deposition appearance: 0 (Cumulative total: 7)
    c. Technology: Active optical cables with embedded silicon modulator ICs, copper cable, fiber optic cable, VCSEL laser diodes, photodetectors and cable sheathing for consumer applications such as gaming, HDMI, USB, etc.
109. Active case work: 2Q2021 – 3Q2021; *Acuity Brands Lighting ,Inc. v. Heavy Duty Lighting (HDL), LLC.,* 20-CV-03648-SCJ (GA N. D. Filed 2nd September 2020), (retained by defendant Acuity Brands Lighting) – retained by defendant Duane Morris LLP.

Professor (Dr. Dr.) Michael S. Lebby, B. Eng. (Hons), MBA, Ph.D., D. Eng, Fellow NAI, IEEE, Optica (OSA); C. Eng.
1 Hawthorne St., unit 25a, San Francisco, CA 94105, USA; mobile +1 717 839 7078; drmlebby@gmail.com

a. Deposition: 1 (Cumulative total: 43)
b. Trial/Hearing/court/PTAB appearance: 0 (Cumulative total: 21)
    i. ITC trial appearance: 0 (Cumulative total: 7)
    ii. District Court trial appearance: 0 (Cumulative total: 6)
    iii. PTAB Court trial/deposition appearance: 0 (Cumulative total: 7)
c. Technology: LED lighting, LED chips, LED packages and LED packaging technologies such as molding, glob-top, substrates, die mounting, optical reflectors, and electrical interconnect layouts.

110. Active case work: 2Q2021 – 4Q2021; *Jiaxing Super Lighting Electric Appliance Co., LTD and Obert Inc. v. CH Lighting Technology co., LTD., Elliott Electric Supply Inc., and Shaoxing Ruising Lighting co., Ltd.,* 20-CV-00018-ADA (TX W D. Filed 16th March 2020), (retained by defendant CH Lighting et al) – retained by defendant Holland and Knight LLP.
    a. Deposition: 1 (Cumulative total: 44)
    b. Trial/Hearing/court/PTAB appearance: 1 (Cumulative total: 22)
        i. ITC trial appearance: 0 (Cumulative total: 7)
        ii. District Court trial appearance: 1 (Cumulative total: 7)
        iii. PTAB Court trial/deposition appearance: 0 (Cumulative total: 7)
    c. Technology: LED lighting and LED packaging technologies for T8 and T12 form factor tube lighting. Technologies such as LED luminaire/tube packaging, mechanical structure, thermal heat dissipation, electronic circuitry, printed circuit boards, and LED chips.
111. Active case work: 3Q2021 – 1Q2022; ASUSTEK Computer Inc, *v. KT Imaging USA LLC,* 20-CV-00300-ADA (TX W D. Filed 20th April 2020, (retained by defendant ASUSTEK Computer Inc) – retained by defendant Turner Boyd LLP.
    a. Deposition: 0 (Cumulative total: 44)
    b. Trial/Hearing/court/PTAB appearance: 0 (Cumulative total: 22)
        i. ITC trial appearance: 0 (Cumulative total: 7)
        ii. District Court trial appearance: 0 (Cumulative total: 7)
        iii. PTAB Court trial/deposition appearance: 0 (Cumulative total: 7)
    c. Technology: Image sensor modules, cameras in PCs/laptops, consumer products, tear downs, optical lenses, optical packaging, optical alignment.
112. Active case work: 3Q2021 – 3Q2021; *Jiaxing Super Lighting Electric Appliance Co., LTD and Obert Inc. v. Maxlite Inc.,* 19-CV-04047 (CA C.D. Filed 8th May 2019), (retained by defendant Maxlite Inc) – retained by defendant Holland and Knight LLP.
    a. Deposition: 0 (Cumulative total: 44)
    b. Trial/Hearing/court/PTAB appearance: 0 (Cumulative total: 22)
        i. ITC trial appearance: 0 (Cumulative total: 7)
        ii. District Court trial appearance: 0 (Cumulative total: 7)
        iii. PTAB Court trial/deposition appearance: 0 (Cumulative total: 7)
    c. Technology: LED lighting and LED packaging technologies for T8 and T12 form factor tube lighting. Technologies such as LED luminaire/tube packaging, mechanical structure, thermal heat dissipation, electronic circuitry, printed circuit boards, and LED chips.
113. Active case work: 3Q2021 – 1Q2023; *Feit Electric Company Inc., v. Nichia Corporation,* 20-CV-00359-GW, (CA C. D. Filed 13th January 2020), (retained by defendant Feit Electric Company) – retained by Benesch Friedlander Coplan &Aronoff LLP
    a. Deposition: 2 (Cumulative total: 46)
    b. Trial/Hearing/court/PTAB appearance: 2 (Cumulative total: 24)
        i. ITC trial appearance: 0 (Cumulative total: 7)
        ii. District Court trial appearance: 2 (Cumulative total: 9)
        iii. PTAB Court trial/deposition appearance: 0 (Cumulative total: 7)
    c. Technology: LED lighting, LED chips, LED packages and LED packaging technologies such as lead-frames, molding, glob-top, substrates, die mounting, optical reflectors, and electrical interconnect layouts.
114. Active case work: 2Q2021 – 2Q2022; *Samsung Corporation vs TBD*, Pre-patent litigation, (retained by plaintiff Samsung Corporation), - retained by Quinn Emanuel Urquhart & Sullivan, LLP).
    a. Deposition: 0 (Cumulative total: 46)
    b. Trial/Hearing/court/PTAB appearance: 0 (Cumulative total: 24)
        i. ITC trial appearance: 0 (Cumulative total: 7)
        ii. District Court trial appearance: 0 (Cumulative total: 9)
        iii. PTAB Court trial/deposition appearance: 0 (Cumulative total: 7)
    c. Technology: TV displays, OLEDs, LCDs, color gamut, and quality of RGB/white color as per CIE charts and colorimetry (NTSC, sRGB, AdobeRGB etc,.). Analysis of CHL (constant hue locus), quantum dots, nano-crystals, nano-devices, nano-structures to improve light quality output.
115. Active case work 2Q2021 – 2Q2021, *Holochip Corporation v, Edmund Optics, Optotune AG and others TBD*, Pre-patent litigation for ITC, (retained by plaintiff Holochip Corporation), - retained by King and Spalding LLP).
    a. Deposition: 0 (Cumulative total: 46)

Professor (Dr. Dr.) Michael S. Lebby, B. Eng. (Hons), MBA, Ph.D., D. Eng, Fellow NAI, IEEE, Optica (OSA); C. Eng.
1 Hawthorne St., unit 25a, San Francisco, CA 94105, USA; mobile +1 717 839 7078; drmlebby@gmail.com

b. Trial/Hearing/court/PTAB appearance: 0 (Cumulative total: 24)
    i. ITC trial appearance: 0 (Cumulative total: 7)
    ii. District Court trial appearance: 0 (Cumulative total: 9)
    iii. PTAB Court trial/deposition appearance: 0 (Cumulative total: 7)
c. Technology: Fluid lenses, and optical lenses with controlled focus facilities. Packaging of fluid lenses using piezoelectric actuators, and hermetic chambers. Deformable surfaces using micro-fluidics.

116. Active case work: 2Q2021-3Q2021; *Home Depot USA Inc., v. Lynk Labs, Inc.,* IPR declaration for U.S. Patent 10,757,783 (IPR2021-01368), (retained by petitioner Home Depot USA, Inc) – retained by DLA Piper LLP
    a. Deposition: 1 (Cumulative total: 47)
    b. Trial/Hearing/court/PTAB appearance: 0 (Cumulative total: 25)
        i. ITC trial appearance: 0 (Cumulative total: 7)
        ii. District Court trial appearance: 0 (Cumulative total: 9)
        iii. PTAB Court trial/deposition appearance: 1 (Cumulative total: 8)
    c. Technology: LED products, LED circuits, including both DC and AC circuit design. LED color emission, white light, color mixing, CIE charts, and black body radiators for color temperature.
117. Active case work: 2Q2021-3Q2021; *Home Depot USA Inc., v. Lynk Labs, Inc.,* IPR declaration for U.S. Patent 10,492,251 (IPR2021-01369), (retained by petitioner Home Depot USA, Inc) – retained by DLA Piper LLP
    a. Deposition: 1 (Cumulative total: 48)
    b. Trial/Hearing/court/PTAB appearance: 0 (Cumulative total: 26)
        i. ITC trial appearance: 0 (Cumulative total: 7)
        ii. District Court trial appearance: 0 (Cumulative total: 9)
        iii. PTAB Court trial/deposition appearance: 1 (Cumulative total: 9)
    c. Technology: LED products, LED circuits, including both DC and AC circuit design. LED color emission, white light, color mixing, CIE charts, and black body radiators for color temperature.
118. Active case work: 3Q2021-3Q2021; *Home Depot USA Inc., v. Lynk Labs, Inc.,* IPR declaration for U.S. Patent 10,091,842 (IPR2021-01540), (retained by petitioner Home Depot USA, Inc) – retained by DLA Piper LLP
    a. Deposition: 1 (Cumulative total: 49)
    b. Trial/Hearing/court/PTAB appearance: 0 (Cumulative total: 27)
        i. ITC trial appearance: 0 (Cumulative total: 7)
        ii. District Court trial appearance: 0 (Cumulative total: 9)
        iii. PTAB Court trial/deposition appearance: 1 (Cumulative total: 10)
    c. Technology: LED products, LED circuits, including both DC and AC circuit design. LED color emission, white light, color mixing, CIE charts, and black body radiators for color temperature.
119. Active case work: 4Q2021-4Q2021; *Home Depot USA Inc., v. Lynk Labs, Inc.,* IPR declaration for U.S. Patent 10,517,149 (IPR2022-000023), (retained by petitioner Home Depot USA, Inc) – retained by DLA Piper LLP
    a. Deposition: 1 (Cumulative total: 50)
    b. Trial/Hearing/court/PTAB appearance: 0 (Cumulative total: 28)
        i. ITC trial appearance: 0 (Cumulative total: 7)
        ii. District Court trial appearance: 0 (Cumulative total: 9)
        iii. PTAB Court trial/deposition appearance: 1 (Cumulative total: 10)
    c. Technology: LED products, LED circuits, including both DC and AC circuit design. LED color emission, white light, color mixing, CIE charts, and black body radiators for color temperature.
120. Active case work: 4Q2021-4Q2022; *Everlight Elecs. Co. Ltd. v. Amazon.com, Inc. et al.,* 6:21-CV-00906 (W. D. TX filed: August 31st 2021); (retained by defendant Amazon.com) – Morrison and Foerster LLP.
    a. Deposition: 0 (Cumulative total: 50)
    b. Trial/Hearing/court/PTAB appearance: 0 (Cumulative total: 28)
        i. ITC trial appearance: 0 (Cumulative total: 7)
        ii. District Court trial appearance: 0 (Cumulative total: 9)
        iii. PTAB Court trial/deposition appearance: 0 (Cumulative total: 10)
    c. Technology: LED chips, LED packaging with metallic electrodes, flip-chip solder bumping, and doping of semiconductors for electrical conduction.
121. Active case work: 4Q2021-2Q2021; *Hanwha Solutions Corporation and affiliated companies including Q-Cells, Boviet Renewable Power, Boviet Solar, Canadian Solar International v. Advanced Silicon Group Technologies,* ITC 337-TA-1271 (filed: 14th October 2020) "Certain silicon photovoltaic cells and modules with nanostructures, and products containing the same." (retained by joint defense group consisting of Quinn Emanual Urquhart & Sullivan, LLP., Morgan Lewis and Bockius, LLP., and Sidley Austin LLP.).
    a. Deposition: 2 (Cumulative total: 52)
    b. Trial/Hearing/court/PTAB appearance: 1 (Cumulative total: 29)
        i. ITC trial appearance: 1 (Cumulative total: 8)
        ii. District Court trial appearance: 0 (Cumulative total: 10)
        iii. PTAB Court trial/deposition appearance: 0 (Cumulative total: 10)
    c. Technology: Silicon based solar/photovoltaic cells and modules that include fabrication techniques such as deposition, diffusion, wet/dry etching of nanostructures, nanowires, and nano-structures, nano-features, black silicon, monocrystalline wafers, and polysilicon fabrication.

Professor (Dr. Dr.) Michael S. Lebby, B. Eng. (Hons), MBA, Ph.D., D. Eng, Fellow NAI, IEEE, Optica (OSA); C. Eng.
1 Hawthorne St., unit 25a, San Francisco, CA 94105, USA; mobile +1 717 839 7078; drmlebby@gmail.com

122. Active case work: 4Q2021-2Q2022; *Dell Computer Inc, v. KT Imaging USA LLC,* Declaration for IPR with patent number 6,876,544 as petitioner, (to be filed), (retained by defendant Dell Computer Inc) – retained by petitioner Farella, Braun, and Martel.
    a. Deposition: 0 (Cumulative total: 52)
    b. Trial/Hearing/court/PTAB appearance: 0 (Cumulative total: 29)
        i. ITC trial appearance: 0 (Cumulative total: 8)
        ii. District Court trial appearance: 0 (Cumulative total: 10)
        iii. PTAB Court trial/deposition appearance: 0 (Cumulative total: 10)
    c. Technology: Image sensor modules, cameras in PCs/laptops, consumer products, tear downs, optical lenses, optical packaging, optical alignment.
123. Active case work: 1Q2022-2Q2022; *Cree Lighting, Wolfspeed, Ideal Industries Lighting, v. CAO Lighting,* Declaration for IPR with patent number 6,465,961 as petitioner, (filed 8th April 2022), (retained by defendant Cree Lighting) – retained by Kilpatrick Townsend & Stockton LLP.
    a. Deposition: 2 (Cumulative total: 54)
    b. Trial/Hearing/court/PTAB appearance: 2 (Cumulative total: 31)
        i. ITC trial appearance: 0 (Cumulative total: 8)
        ii. District Court trial appearance: 0 (Cumulative total: 10)
        iii. PTAB Court trial/deposition appearance: 2 (Cumulative total: 12)
    c. Technology: LED based light bulbs, LED chips, LED arrays, LED packaging, chip-on-board, heat sinks, GaN, InGaN, AlGaN (Gallium Nitride, Indium Gallium Nitride, Aluminum Gallium Nitride) epitaxial layers, active regions, cladding layers, optical mirrors, DBRs
124. Active case work: 1Q2022-2Q2022; *Cree Lighting, Wolfspeed, Ideal Industries Lighting, v. CAO Lighting,* Declaration for IPR with patent numbers 6,634,770 as petitioner, (filed 8th April 2022), (retained by defendant Cree Lighting) – retained by Kilpatrick Townsend & Stockton LLP.
    a. Deposition: 1 (Cumulative total: 55)
    b. Trial/Hearing/court/PTAB appearance: 0 (Cumulative total: 32)
        i. ITC trial appearance: 0 (Cumulative total: 8)
        ii. District Court trial appearance: 0 (Cumulative total: 10)
        iii. PTAB Court trial/deposition appearance: 1 (Cumulative total: 13)
    c. Technology: LED based light bulbs, LED chips, LED arrays, LED packaging, chip-on-board, heat sinks, GaN, InGaN, AlGaN (Gallium Nitride, Indium Gallium Nitride, Aluminum Gallium Nitride) epitaxial layers, active regions, cladding layers, optical mirrors, DBRs
125. Active case work: 1Q2022-2Q2022; *Cree Lighting dba Ideal Industries Lighting, v. CAO Lighting,* 1:21-cv-00634 (MD NC filed 12th Aug 2021,), (retained by defendant Cree Lighting) – retained by Kilpatrick Townsend & Stockton LLP.
    a. Deposition: 0 (Cumulative total: 55)
    b. Trial/Hearing/court/PTAB appearance: 0 (Cumulative total: 32)
        i. ITC trial appearance: 0 (Cumulative total: 8)
        ii. District Court trial appearance: 0 (Cumulative total: 10)
        iii. PTAB Court trial/deposition appearance: 0 (Cumulative total: 13)
    c. Technology: LED based light bulbs, LED chips, LED arrays, LED packaging, chip-on-board, heat sinks, GaN, InGaN, AlGaN (Gallium Nitride, Indium Gallium Nitride, Aluminum Gallium Nitride) epitaxial layers, active regions, cladding layers, optical mirrors, DBRs
126. Active case work: 1Q2022-2Q2022; *Lite-On Technology Corporation and Genesis Photonics Inc., v. Sensor Electronic Technology Inc., (SETi),* 6:21-cv-00322 (WD Tex filed 12th Aug 2021,), (retained by plaintiff LiteOn and Genesis) – retained by Pillsbury Winthrop Shaw Pittman LLP.
    a. Deposition: 0 (Cumulative total: 55)
    b. Trial/Hearing/court/PTAB appearance: 0 (Cumulative total: 32)
        i. ITC trial appearance: 0 (Cumulative total: 8)
        ii. District Court trial appearance: 0 (Cumulative total: 10)
        iii. PTAB Court trial/deposition appearance: 0 (Cumulative total: 13)
    c. Technology: LED based light bulbs, LED chips, LED arrays, LED packaging, flip-chip packaging, chip-on-board, heat sinks, GaN, InGaN, AlGaN (Gallium Nitride, Indium Gallium Nitride, Aluminum Gallium Nitride) epitaxial layers, GaN fabrication, LED quantum well active regions, LEDcladding layers, optical mirrors, DBRs
127. Active case work: 1Q2022-2Q2022; *Lite-On Technology Corporation and Genesis Photonics Inc., v. Sensor Electronic Technology Inc., (SETi),* Declaration for IPR (IPR2022-00395) as patent owner, (retained by plaintiff LiteOn and Genesis) – retained by Pillsbury Winthrop Shaw Pittman LLP.
    a. Deposition: 2 (Cumulative total: 57)
    b. Trial/Hearing/court/PTAB appearance: 0 (Cumulative total: 34)
        i. ITC trial appearance: 0 (Cumulative total: 8)
        ii. District Court trial appearance: 0 (Cumulative total: 10)
        iii. PTAB Court trial/deposition appearance: 2 (Cumulative total: 15)

Professor (Dr. Dr.) Michael S. Lebby, B. Eng. (Hons), MBA, Ph.D., D. Eng, Fellow NAI, IEEE, Optica (OSA); C. Eng.
1 Hawthorne St., unit 25a, San Francisco, CA 94105, USA; mobile +1 717 839 7078; drmlebby@gmail.com

c. Technology: LED based light bulbs, LED chips, LED arrays, LED packaging, flip-chip packaging, chip-on-board, heat sinks, GaN, InGaN, AlGaN (Gallium Nitride, Indium Gallium Nitride, Aluminum Gallium Nitride) epitaxial layers, GaN fabrication, LED quantum well active regions, LED cladding layers, optical mirrors, DBRs

128. Active case work: 1Q2022-2Q2022; *Lite-On Technology Corporation and Genesis Photonics Inc., v. Sensor Electronic Technology Inc., (SETi),* Declaration for IPR (IPR2022-00396) as patent owner, (retained by plaintiff LiteOn and Genesis) – retained by Pillsbury Winthrop Shaw Pittman LLP.
    a. Deposition: 0 (Cumulative total: 57)
    b. Trial/Hearing/court/PTAB appearance: 0 (Cumulative total: 34)
        i. ITC trial appearance: 0 (Cumulative total: 8)
        ii. District Court trial appearance: 0 (Cumulative total: 10)
        iii. PTAB Court trial/deposition appearance: 0 (Cumulative total: 15)
    c. Technology: LED based light bulbs, LED chips, LED arrays, LED packaging, flip-chip packaging, chip-on-board, heat sinks, GaN, InGaN, AlGaN (Gallium Nitride, Indium Gallium Nitride, Aluminum Gallium Nitride) epitaxial layers, GaN fabrication, LED quantum well active regions, LED cladding layers, optical mirrors, DBRs
129. Active case work: 1Q2022-2Q2022; *Lite-On Technology Corporation and Genesis Photonics Inc., v. Sensor Electronic Technology Inc., (SETi),* Declaration for IPR (IPR2022-00397) as patent owner, (retained by plaintiff LiteOn and Genesis) – retained by Pillsbury Winthrop Shaw Pittman LLP.
    a. Deposition: 0 (Cumulative total: 57)
    b. Trial/Hearing/court/PTAB appearance: 0 (Cumulative total: 34)
        i. ITC trial appearance: 0 (Cumulative total: 8)
        ii. District Court trial appearance: 0 (Cumulative total: 10)
        iii. PTAB Court trial/deposition appearance: 0 (Cumulative total: 15)
    c. Technology: LED based light bulbs, LED chips, LED arrays, LED packaging, flip-chip packaging, chip-on-board, heat sinks, GaN, InGaN, AlGaN (Gallium Nitride, Indium Gallium Nitride, Aluminum Gallium Nitride) epitaxial layers, GaN fabrication, LED quantum well active regions, LED cladding layers, optical mirrors, DBRs
130. Active case work: 1Q2022-2Q2022; *Lite-On Technology Corporation and Genesis Photonics Inc., v. Sensor Electronic Technology Inc., (SETi),* Declaration for IPR (IPR2022-00406) as patent owner, (retained by plaintiff LiteOn and Genesis) – retained by Pillsbury Winthrop Shaw Pittman LLP.
    a. Deposition: 0 (Cumulative total: 57)
    b. Trial/Hearing/court/PTAB appearance: 0 (Cumulative total: 34)
        i. ITC trial appearance: 0 (Cumulative total: 8)
        ii. District Court trial appearance: 0 (Cumulative total: 10)
        iii. PTAB Court trial/deposition appearance: 0 (Cumulative total: 15)
    c. Technology: LED based light bulbs, LED chips, LED arrays, LED packaging, flip-chip packaging, chip-on-board, heat sinks, GaN, InGaN, AlGaN (Gallium Nitride, Indium Gallium Nitride, Aluminum Gallium Nitride) epitaxial layers, GaN fabrication, LED quantum well active regions, LED cladding layers, optical mirrors, DBRs
131. Active case work: 1Q2022-2Q2022; *Lite-On Technology Corporation and Genesis Photonics Inc., v. Sensor Electronic Technology Inc., (SETi),* Declaration for IPR (IPR2022-00419) as patent owner, (retained by plaintiff LiteOn and Genesis) – retained by Pillsbury Winthrop Shaw Pittman LLP.
    a. Deposition: 1 (Cumulative total: 58)
    b. Trial/Hearing/court/PTAB appearance: 0 (Cumulative total: 35)
        i. ITC trial appearance: 0 (Cumulative total: 8)
        ii. District Court trial appearance: 0 (Cumulative total: 10)
        iii. PTAB Court trial/deposition appearance: 1 (Cumulative total: 16)
    c. Technology: LED based light bulbs, LED chips, LED arrays, LED packaging, flip-chip packaging, chip-on-board, heat sinks, GaN, InGaN, AlGaN (Gallium Nitride, Indium Gallium Nitride, Aluminum Gallium Nitride) epitaxial layers, GaN fabrication, LED quantum well active regions, LED cladding layers, optical mirrors, DBRs
132. Active case work: 1Q2022-3Q2022; *Panasonic Corporation, v. Magna International Inc.,* 21-cv-00319 (WD Tex filed 31st Mar 2021,), (retained by plaintiff Magna International) – retained by Sidley Austin LLP.
    a. Deposition: 0 (Cumulative total: 58)
    b. Trial/Hearing/court/PTAB appearance: 0 (Cumulative total: 35)
        i. ITC trial appearance: 0 (Cumulative total: 8)
        ii. District Court trial appearance: 0 (Cumulative total: 10)
        iii. PTAB Court trial/deposition appearance: 0 (Cumulative total: 16)
    c. Technology: Automotive sensors, cameras, electronic circuitry, controls, packaging, surround view camera systems.
133. Active case work: 2Q2022 – 4Q2022; *Jiaxing Super Lighting Electric Appliance Co., LTD and Obert Inc. v. Maxlite Inc.,* 19-CV-04047 (CA C.D. Filed 8th May 2019), (retained by defendant Maxlite Inc) – retained by defendant Procopio, Cory, Hargreaves and Savitch LLP.

Professor (Dr. Dr.) Michael S. Lebby, B. Eng. (Hons), MBA, Ph.D., D. Eng, Fellow NAI, IEEE, Optica (OSA); C. Eng.
1 Hawthorne St., unit 25a, San Francisco, CA 94105, USA; mobile +1 717 839 7078; drmlebby@gmail.com

a. Deposition: 0 (Cumulative total: 58)
b. Trial/Hearing/court/PTAB appearance: 0 (Cumulative total: 35)
    i. ITC trial appearance: 0 (Cumulative total: 8)
    ii. District Court trial appearance: 0 (Cumulative total: 10)
    iii. PTAB Court trial/deposition appearance: 0 (Cumulative total: 16)
c. Technology: LED lighting and LED packaging technologies for T8 and T12 form factor tube lighting. Technologies such as LED luminaire/tube packaging, mechanical structure, thermal heat dissipation, electronic circuitry, printed circuit boards, and LED chips.

134. Active case work: 1Q2022 – 4Q2022; *Advanced Engineering Services LLC., v. Lumasense Technologies Inc., and DOES* 1-50, 21-CV-03279-WHO combined with 20-CV-07905-WHO (CA N.D. Filed 23rd Feb 2022), (retained by plaintiff Advanced Engineering Services LLC) – retained by plaintiff SAC Attorneys LLP
    a. Deposition: 1 (Cumulative total: 59)
    b. Trial/Hearing/court/PTAB appearance: 0 (Cumulative total: 35)
        i. ITC trial appearance: 0 (Cumulative total: 8)
        ii. District Court trial appearance: 0 (Cumulative total: 10)
        iii. PTAB Court trial/deposition appearance: 0 (Cumulative total: 16)
    c. Technology: Thermal, gas, and flow sensing for use in designing and manufacturing equipment used in semiconductor chip manufacturing. In particular, review of data relating to the simulation of finite element analysis ("FEA") and computational fluid dynamics ("CFD") data for gases, temperature, and stress with actual sensor data that could be intelligently integrated, customized, installed, tested, verified, and validated.
135. Active case work: 2Q2022-3Q2022; *Frontier Communications v. Charter Communications*, Pre-litigation IP and Due Diligence; Case No. TBD; Retained by Frontier Communications, (retained by Mayer Brown LLP)
    a. Deposition: 0 (Cumulative total: 59)
    b. Trial/Hearing/court/PTAB appearance: 0 (Cumulative total: 35)
        i. ITC trial appearance: 0 (Cumulative total: 8)
        ii. District Court trial appearance: 0 (Cumulative total: 10)
        iii. PTAB Court trial/deposition appearance: 0 (Cumulative total: 16)
    c. Technology: Optical PON for high-speed data FTTH evaluation, testing, and analysis.
136. Active case work: 2Q2022-3Q2022; *Russ, August & Kabat*, Pre-litigation IP and Due Diligence; Case No. TBD; (retained by plaintiff – Russ, August & Kabat LLP)
    a. Deposition: 0 (Cumulative total: 59)
    b. Trial/Hearing/court/PTAB appearance: 0 (Cumulative total: 35)
        i. ITC trial appearance: 0 (Cumulative total: 8)
        ii. District Court trial appearance: 0 (Cumulative total: 10)
        iii. PTAB Court trial/deposition appearance: 0 (Cumulative total: 16)
    c. Technology: High volume fiber optic transceivers for EPON/GPON with: CDR circuits, 'Intelligence-in-the-Module' and 'M-ary' families.
137. Active case work: 2Q2022-3Q2022; *Signify Holding B.V. v. GE Lighting Solutions LLC.,* Declaration for IPR (IPR2022-XXX – in draft form for US patent #7,497,973) as petitioner, (retained by petitioner Signify Holding B.V.) – retained by Alston and Bird LLP
    a. Deposition: 0 (Cumulative total: 59)
    b. Trial/Hearing/court/PTAB appearance: 0 (Cumulative total: 35)
        i. ITC trial appearance: 0 (Cumulative total: 8)
        ii. District Court trial appearance: 0 (Cumulative total: 10)
        iii. PTAB Court trial/deposition appearance: 0 (Cumulative total: 16)
    c. Technology: LED based light bulbs, LED chips that emit in the UV and visible, LED arrays, LED packaging including phosphors and encapsulants, and the type of phosphors utilized for different emission. In particular, phosphors that are activated by dopants such as Europium (Eu), Manganese (Mn) and the associated ions for these materials e.g. Mn2+, Mn3+, Mn4+, Mn6+, etc. Included analysis of InGaN and AlGaN based epitaxial material systems, and the use of phosphors in high pressure mercury vapor lamps.
138. Active case work: 3Q2022 – 2Q2023; *Canon, Inc., and Canon USA Inc v. WSOU Investments, LLC d/b/a Brazos Licensing and Development.*, Declaration for IPR ((IPR2022-01532) for US patent #7,493,030 as petitioner, (retained by Canon Inc) – retained by Orrick LLP
    a. Deposition: 0 (Cumulative total: 59)
    b. Trial/Hearing/court/PTAB appearance: 0 (Cumulative total: 35)
        i. ITC trial appearance: 0 (Cumulative total: 8)
        ii. District Court trial appearance: 0 (Cumulative total: 11)
        iii. PTAB Court trial/deposition appearance: 0 (Cumulative total: 16)
    c. Technology: Digital camera operation including optical focus, image sensing, optical train, depth of field, exposure time, different focus and focal areas of a portion of the image, general photography and optical principles.

Professor (Dr. Dr.) Michael S. Lebby, B. Eng. (Hons), MBA, Ph.D., D. Eng, Fellow NAI, IEEE, Optica (OSA); C. Eng.
1 Hawthorne St., unit 25a, San Francisco, CA 94105, USA; mobile +1 717 839 7078; drmlebby@gmail.com

139. Active case work: 3Q2022 – 2Q2023; *Canon, Inc., and Canon USA Inc v. WSOU Investments, LLC d/b/a Brazos Licensing and Development.*, 21-CV- 00166-ADA-DTG (W.D. TX.) Filed 29th Sept 2022. (retained by defendant Canon Inc) – retained by Orrick LLP
    a. Deposition: 1 (Cumulative total: 60)
    b. Trial/Hearing/court/PTAB appearance: 0 (Cumulative total: 35)
        i. ITC trial appearance: 0 (Cumulative total: 8)
        ii. District Court trial appearance: 0 (Cumulative total: 10)
        iii. PTAB Court trial/deposition appearance: 0 (Cumulative total: 16)
    c. Technology: Digital camera operation including optical focus, image sensing, optical train, depth of field, exposure time, different focus and focal areas of a portion of the image, general photography and optical principles.
140. Active case work: 3Q2022 – 4Q2023; *Fujifilm Sonosite., v. Butterfly Network, Inc.,* 1-22-CV-00309 (D. De) Filed 29th Mar 2022), (retained by defendant Butterfly Network, Inc.,) – retained by defendant Akin Gump LLP
    a. Deposition: 0 (Cumulative total: 60)
    b. Trial/Hearing/court/PTAB appearance: 0 (Cumulative total: 35)
        i. ITC trial appearance: 0 (Cumulative total: 8)
        ii. District Court trial appearance: 0 (Cumulative total: 10)
        iii. PTAB Court trial/deposition appearance: 0 (Cumulative total: 16)
    c. Technology: Ultra-sonic equipment that includes displays, especially OLED displays. The electronic circuits and how displays are electronically controlled.
141. Active case work: 3Q2022 – 3Q2023; *LedComm LLC., v. IKEA US Retail LLC et al,* 6-22-CV-00302-ADA (W.D. Tx.) Filed 21st Mar 2022), (retained by defendant IKEA US Retail LLC et al.) – retained by defendant Flaster Greenberg LLP
    a. Deposition: 0 (Cumulative total: 60)
    b. Trial/Hearing/court/PTAB appearance: 0 (Cumulative total: 35)
        i. ITC trial appearance: 0 (Cumulative total: 8)
        ii. District Court trial appearance: 0 (Cumulative total: 10)
        iii. PTAB Court trial/deposition appearance: 0 (Cumulative total: 16)
    c. Technology: LED surface mount packaging, LED GaN/InGaN chips, and associated LED lighting performance specifications.
142. Active case work: 2Q2022 – 3Q2022; *NXP Semiconductors N.V. and NXP USA Inc., v. MediaTek Inc, Amazon.com Inc., Belkin International Inc, Linksys USA Inc., et al,* ITC Investigation 337-TA-1287 entitled "Certain integrated circuits, and electronic devices and products containing the same" (Filed 1st Dec 2021), (retained by respondents Amazon.com Inc.,) – retained by respondent Morrison Foerster LLP
    a. Deposition: 0 (Cumulative total: 60)
    b. Trial/Hearing/court/PTAB appearance: 0 (Cumulative total: 35)
        i. ITC trial appearance: 0 (Cumulative total: 8)
        ii. District Court trial appearance: 0 (Cumulative total: 10)
        iii. PTAB Court trial/deposition appearance: 0 (Cumulative total: 16)
    c. Technology: LED surface mount packaging, LED GaN/InGaN chips, and associated LED lighting performance specifications. LED Luminaires.
143. Active case work: 3Q2022 – 4Q2022; *Amazon.com Inc., v. Epistar Corp.,* 6-22-CV-00526-ADA (W.D. Tx.) Filed 24th May 2022), (retained by defendant Amazon.com Inc..) – retained by defendant Morrison Foerster LLP
    a. Deposition: 0 (Cumulative total: 60)
    b. Trial/Hearing/court/PTAB appearance: 0 (Cumulative total: 35)
        i. ITC trial appearance: 0 (Cumulative total: 8)
        ii. District Court trial appearance: 0 (Cumulative total: 10)
        iii. PTAB Court trial/deposition appearance: 0 (Cumulative total: 16)
    c. Technology: LED surface mount packaging, LED GaN/InGaN chips, GaN/InGaN epitaxial growth, fabrication, device design and packaging. LED luminaires.
144. Active case work: 4Q2022 – 2Q2023; *Amazon.com Inc., v. Epistar Corp.,* 6-22-CV-00526-ADA (W.D. Tx.) Filed 24th May 2022), (retained by defendant Amazon.com Inc..) – retained by defendant Perkins Coie LLP
    a. Deposition: 0 (Cumulative total: 60)
    b. Trial/Hearing/court/PTAB appearance: 0 (Cumulative total: 35)
        i. ITC trial appearance: 0 (Cumulative total: 8)
        ii. District Court trial appearance: 0 (Cumulative total: 10)
        iii. PTAB Court trial/deposition appearance: 0 (Cumulative total: 16)
    c. Technology: LED surface mount packaging, LED GaN/InGaN chips, GaN/InGaN epitaxial growth, fabrication, device design and packaging. LED Luminaires.
145. Active case work: 4Q2022 – 2Q2024; *Qorvo., v. Akoustis Technologies Inc.,* 1-21-CV-1417-JPM (C.A.) Filed 4th Oct 2021), (retained by defendant Akoustis.) – retained by defendant Pillsbury LLP
    a. Deposition: 1 (Cumulative total: 61)
    b. Trial/Hearing/court/PTAB appearance: 1 (Cumulative total: 36)
        i. ITC trial appearance: 0 (Cumulative total: 8)

Professor (Dr. Dr.) Michael S. Lebby, B. Eng. (Hons), MBA, Ph.D., D. Eng, Fellow NAI, IEEE, Optica (OSA); C. Eng.
1 Hawthorne St., unit 25a, San Francisco, CA 94105, USA; mobile +1 717 839 7078; drmlebby@gmail.com

ii. District Court trial appearance: 1 (Cumulative total: 11)
iii. PTAB Court trial/deposition appearance: 0 (Cumulative total: 16)

c. Technology: acoustic wave filters, BAW filters (bulk-acoustic-wave) filters for RF applications, devices, fabrication, and characterization. Trade secrets and the misappropriation of trade secrets, confidential information, security policies, and overall development of new technology platforms.

146. Active case work: 4Q2022 – 3Q2023; *LG Electronics Inc., v. TCL Electronics Holdings Ltd. (f/k/a TCL § Multimedia Technology Holdings, Ltd.); § TCL Industries Holdings Co., Ltd.; TCL § Industries Holdings (H.K.) Limited; TTE § Technology, Inc. (d/b/a TCL North § America); TTE Corporation; TCL Moka § International Limited; TCL Moka § Manufacturing S.A. de C.V.; TCL King § Electrical Appliances (Huizhou) Co. Ltd.; § Manufacturas Avanzadas S.A. de C.V.; § TCL Smart Device (Vietnam) Co., Ltd.; § Shenzhen TCL New Technology Co., Ltd.; § TCL Optoelectronics Technology (Huizhou) § Co., Ltd.; TCL Overseas Marketing Ltd.; § and TCL Technology Group Corporation § (f/k/a TCL Corp.), TCL Electronics Holdings Ltd et al.,* 2-22-CV-0122-JRG (W.D. Tx.) Filed 14th Oct 2022), (retained by plaintiff LGE) – retained by plaintiff counsel Baker Botts LLP
   a. Deposition: 0 (Cumulative total: 61)
   b. Trial/Hearing/court/PTAB appearance: 0 (Cumulative total: 36)
      i. ITC trial appearance: 0 (Cumulative total: 8)
      ii. District Court trial appearance: 0 (Cumulative total: 11)
      iii. PTAB Court trial/deposition appearance: 0 (Cumulative total: 16)
   c. Technology: BLU and backlighting of displays, especially LCD displays. Optical waveguide, reflecting, and transmission technology, optical sheet materials, optical shapes all utilizing LEDs in various optical package designs.

147. Active case work: 1Q2023 – Present; *NextGen Innovations, LLC v. Nokia of America Corporation et al.,* 2-22-CV-00309-JRG-RSP (E.D. Tex.), (filed: 9th Aug 2022), retained by plaintiff NextGen Innovations LLC., - retained by plaintiff counsel Russ August and Kabat LLP.
   a. Deposition: 0 (Cumulative total: 61)
   b. Trial/Hearing/court/PTAB appearance: 0 (Cumulative total: 36)
      i. ITC trial appearance: 0 (Cumulative total: 8)
      ii. District Court trial appearance: 0 (Cumulative total: 11)
      iii. PTAB Court trial/deposition appearance: 0 (Cumulative total: 16)
   c. Technology: Optical network systems, transceiver modules, passive optical networks, transceiver electronic and optoelectronic components and ICs.

148. Active case work: 1Q2023 – 1Q2023; *NextGen Innovations, LLC v. Infinera et al.,* 2-22-CV-00306-JRG-RSP (E.D. Tex.), (filed: 9th Aug 2022), retained by plaintiff NextGen Innovations LLC., - retained by plaintiff counsel Russ August and Kabat LLP.
   a. Deposition: 1 (Cumulative total: 62)
   b. Trial/Hearing/court/PTAB appearance: 0 (Cumulative total: 36)
      i. ITC trial appearance: 0 (Cumulative total: 8)
      ii. District Court trial appearance: 0 (Cumulative total: 11)
      iii. PTAB Court trial/deposition appearance: 0 (Cumulative total: 16)
   c. Technology: Optical network systems, transceiver modules, passive optical networks, transceiver electronic and optoelectronic components and ICs.

149. Active case work: 3Q2023 – 4Q2023; *Ikea North America Services LLC., Ikea US Retail LLC., v. Everlight Electronics et al,* 2-23-CV-00126-ADA (E.D. Tx.) Filed 27th Mar 2023), (retained by defendant Ikea US Retail LLC et al.) – retained by defendant counsel Flaster Greenberg LLP
   a. Deposition: 0 (Cumulative total: 62)
   b. Trial/Hearing/court/PTAB appearance: 0 (Cumulative total: 36)
      i. ITC trial appearance: 0 (Cumulative total: 8)
      ii. District Court trial appearance: 0 (Cumulative total: 11)
      iii. PTAB Court trial/deposition appearance: 0 (Cumulative total: 16)
   c. Technology: LED surface mount packaging, LED GaN/InGaN chips, and associated LED lighting performance specifications.

150. Active case work: 1Q2023 – 3Q2023; *Jiaxing Super Lighting Electric Appliance Co., LTD and Obert Inc. v. Current Lighting Solutions, LLC d/b/a GE Current.,* 6-22-CV-00534-ADA (W.D. Tx). Filed 16th Sep 2022), (retained by defendant GE Current) – retained by defendant counsel Norton Rose Fulbright US LLP.
   a. Deposition: 0 (Cumulative total: 62)
   b. Trial/Hearing/court/PTAB appearance: 0 (Cumulative total: 36)
      i. ITC trial appearance: 0 (Cumulative total: 8)
      ii. District Court trial appearance: 0 (Cumulative total: 11)
      iii. PTAB Court trial/deposition appearance: 0 (Cumulative total: 16)
   c. Technology: LED lighting and LED packaging technologies for T8 and T12 form factor tube lighting. Technologies such as LED luminaire/tube packaging, mechanical structure, thermal heat dissipation, electronic circuitry, printed circuit boards, and LED chips.

Professor (Dr. Dr.) Michael S. Lebby, B. Eng. (Hons), MBA, Ph.D., D. Eng, Fellow NAI, IEEE, Optica (OSA); C. Eng.
1 Hawthorne St., unit 25a, San Francisco, CA 94105, USA; mobile +1 717 839 7078; drmlebby@gmail.com

151. Active case work: 1Q2023 – 2Q2023; *Jiaxing Super Lighting Electric Appliance Co., LTD and Obert Inc. v. Current Lighting Solutions, LLC d/b/a GE Current.,* Declaration for IPR petition (IPR2023-00272) for US patent #10,830,397 as petitioner, (retained by Current Lighting) – retained by counsel Norton Rose Fulbright US LLP.
    a. Deposition: 0 (Cumulative total: 62)
    b. Trial/Hearing/court/PTAB appearance: 0 (Cumulative total: 36)
        i. ITC trial appearance: 0 (Cumulative total: 8)
        ii. District Court trial appearance: 0 (Cumulative total: 11)
        iii. PTAB Court trial/deposition appearance: 0 (Cumulative total: 16)
    c. Technology: LED lighting and LED packaging technologies for T8 and T12 form factor tube lighting. Technologies such as LED luminaire/tube packaging, mechanical structure, thermal heat dissipation, electronic circuitry, printed circuit boards, and LED chips.
152. Active case work: 1Q2023 – 2Q2023; *Jiaxing Super Lighting Electric Appliance Co., LTD and Obert Inc. v. Current Lighting Solutions, LLC d/b/a GE Current.,* Declaration for IPR petition (IPR2023-00984) for US patent #9,841,174 as petitioner, (retained by Current Lighting) – retained by counsel Norton Rose Fulbright US LLP.
    a. Deposition: 0 (Cumulative total: 62)
    b. Trial/Hearing/court/PTAB appearance: 0 (Cumulative total: 36)
        i. ITC trial appearance: 0 (Cumulative total: 8)
        ii. District Court trial appearance: 0 (Cumulative total: 11)
        iii. PTAB Court trial/deposition appearance: 0 (Cumulative total: 16)
    d. Technology: LED lighting and LED packaging technologies for T8 and T12 form factor tube lighting. Technologies such as LED luminaire/tube packaging, mechanical structure, thermal heat dissipation, electronic circuitry, printed circuit boards, and LED chips.
153. Active case work: 1Q2023 – 2Q2023; *Jiaxing Super Lighting Electric Appliance Co., LTD and Obert Inc. v. Current Lighting Solutions, LLC d/b/a GE Current.,* Declaration for IPR petition (IPR2023-00983) for US patent #10,487,991 as petitioner, (retained by Current Lighting) – retained by counsel Norton Rose Fulbright US LLP.
    a. Deposition: 0 (Cumulative total: 62)
    b. Trial/Hearing/court/PTAB appearance: 0 (Cumulative total: 36)
        i. ITC trial appearance: 0 (Cumulative total: 8)
        ii. District Court trial appearance: 0 (Cumulative total: 11)
        iii. PTAB Court trial/deposition appearance: 0 (Cumulative total: 16)
    c. Technology: LED lighting and LED packaging technologies for T8 and T12 form factor tube lighting. Technologies such as LED luminaire/tube packaging, mechanical structure, thermal heat dissipation, electronic circuitry, printed circuit boards, and LED chips.
154. Active case work: 1Q2023 – 2Q2023; *Jiaxing Super Lighting Electric Appliance Co., LTD and Obert Inc. v. Current Lighting Solutions, LLC d/b/a GE Current.,* Declaration for IPR petition (IPR2023-00676) for US patent #9,939,140 as petitioner, (retained by Current Lighting) – retained by counsel Norton Rose Fulbright US LLP.
    a. Deposition: 0 (Cumulative total: 62)
    b. Trial/Hearing/court/PTAB appearance: 0 (Cumulative total: 36)
        i. ITC trial appearance: 0 (Cumulative total: 8)
        ii. District Court trial appearance: 0 (Cumulative total: 11)
        iii. PTAB Court trial/deposition appearance: 0 (Cumulative total: 16)
    c. Technology: LED lighting and LED packaging technologies for T8 and T12 form factor tube lighting. Technologies such as LED luminaire/tube packaging, mechanical structure, thermal heat dissipation, electronic circuitry, printed circuit boards, and LED chips.
155. Active case work: 1Q2023 – 2Q2023; *US Conec. Ltd. v. Senko Advanced Components Inc.,* 1-23-CV-00083-UNA (D. De). Filed 24th Jan 2023), (retained by defendant US Conec Ltd.) – retained by defendant counsel Troutman Pepper Hamilton Sanders LLP.
    a. Deposition: 0 (Cumulative total: 62)
    b. Trial/Hearing/court/PTAB appearance: 0 (Cumulative total: 36)
        i. ITC trial appearance: 0 (Cumulative total: 8)
        ii. District Court trial appearance: 0 (Cumulative total: 11)
        iii. PTAB Court trial/deposition appearance: 0 (Cumulative total: 16)
    c. Technology: Fiber optic adapters, fiber optic connectors (simplex, duplex, quad, multi-fiber), fiber trays, racks, and fiber cabinet equipment. Single mode and multimode connector design, and fiber optic connector standards.
156. Active case work: 1Q2023 – 2Q2023; *US Conec. Ltd. v. Senko Advanced Components Inc.,* Declaration for IPR petition (IPR2023-00XXX) for US patent #11,307,369 as petitioner (retained by defendant US Conec Ltd.) – retained by defendant counsel Alston and Bird LLP (pending).
    a. Deposition: 0 (Cumulative total: 62)
    b. Trial/Hearing/court/PTAB appearance: 0 (Cumulative total: 36)
        i. ITC trial appearance: 0 (Cumulative total: 8)
        ii. District Court trial appearance: 0 (Cumulative total: 11)
        iii. PTAB Court trial/deposition appearance: 0 (Cumulative total: 16)

Professor (Dr. Dr.) Michael S. Lebby, B. Eng. (Hons), MBA, Ph.D., D. Eng, Fellow NAI, IEEE, Optica (OSA); C. Eng.
1 Hawthorne St., unit 25a, San Francisco, CA 94105, USA; mobile +1 717 839 7078; drmlebby@gmail.com

c. Technology: Fiber optic adapters, fiber optic connectors (simplex, duplex, quad, multi-fiber), fiber trays, racks, and fiber cabinet equipment. Single mode and multimode connector design, and fiber optic connector standards.

157. Active case work: 1Q2023 – 2Q2023; *Inneos LLC., v. Opticis Co., Ltd.,* 8-23-CV-00185-JWH-ADS (C.D. Ca). Filed 30th Jan 2023), (retained by plaintiff GE Current) – retained by plaintiff counsel Womble Bond Dickinson (US) LLP.
    a. Deposition: 1 (Cumulative total: 63)
    b. Trial/Hearing/court/PTAB appearance: 0 (Cumulative total: 37)
        i. ITC trial appearance: 0 (Cumulative total: 8)
        ii. District Court trial appearance: 0 (Cumulative total: 11)
        iii. PTAB Court trial/deposition appearance: 1 (Cumulative total: 17)
    c. Technology: VCSEL transceiver WDM (wavelength division multiplexing) modules, package design, optics, freeform, diffractive, refractive, and optical filters. Multimode fiber optics designs.
158. Active case work: 1Q2023 – 1Q2023; *Viavi Solutions Inc., v Zhejiang Crystal-Optech Co. Ltd.,* 2-21-CV-0378-JRG (E.D. Tx) (filed: 3rd Aug 2022), retained by complainant Viavi Solutions Inc., – retained by counsel Venable, LLP.
    a. Deposition: 0 (Cumulative total: 63)
    b. Trial/Hearing/court/PTAB appearance: 0 (Cumulative total: 37)
        i. ITC trial appearance: 0 (Cumulative total: 8)
        ii. District Court trial appearance: 0 (Cumulative total: 11)
        iii. PTAB Court trial/deposition appearance: 0 (Cumulative total: 17)
    c. Technology: Optical filters and optical sensor systems, design and fabrication of dielectric materials for passband filters in applications such as optical communications, imaging, sensing, medical, automotive.
159. Active case work: 1Q2023 – 2Q2023; *Signify North America Corporation and Signify Holding BV., v Satco Products Inc.,* 2-19-CV-06125-JMA-SIL (E.D. NY) (filed: 30th Oct 2022), retained by defendant Satco Products Inc., – retained by defendant counsel Pillsbury Winthrop Shaw Pittman, LLP
    a. Deposition: 0 (Cumulative total: 63)
    b. Trial/Hearing/court/PTAB appearance: 0 (Cumulative total: 37)
        i. ITC trial appearance: 0 (Cumulative total: 8)
        ii. District Court trial appearance: 0 (Cumulative total: 11)
        iii. PTAB Court trial/deposition appearance: 0 (Cumulative total: 17)
    c. Technology: LED backlights, optical techniques for light distribution. Display panels, and LED packaging.
160. Active case work: 1Q2023 – 1Q2023; *Becton Dickinson and Company v. Beckman Coulter Inc.,* 1-21-CV-00833-CLC-JFH (D. De), (filed: 3rd Jan 2023), retained by plaintiff Becton Dickinson and Company, - retained by plaintiff counsel Quinn Emanuel Urquhart & Sullivan, LLP.
    a. Deposition: 0 (Cumulative total: 63)
    b. Trial/Hearing/court/PTAB appearance: 0 (Cumulative total: 37)
        i. ITC trial appearance: 0 (Cumulative total: 8)
        ii. District Court trial appearance: 0 (Cumulative total: 11)
        iii. PTAB Court trial/deposition appearance: 0 (Cumulative total: 17)
    c. Technology: Optical filters, sensors, micro-fluidics, lasers, optical test and measurement. Optical instrumentation for fluorescence analysis, characterization of fluorescent material.
161. Active case work: 2Q2023 – 2Q2023; *138 East LCD Advancements Limited v. Chongqing HKC Optoelectronics Technology Ltd.,* Declaration for IPR patent owner response (IPR2023-00476) for US patent #7,335,913 as patent owner, (retained by 138 East LCD Advancements Ltd.) – retained by counsel Robins Kaplan LLP
    a. Deposition: 0 (Cumulative total: 63)
    b. Trial/Hearing/court/PTAB appearance: 0 (Cumulative total: 37)
        i. ITC trial appearance: 0 (Cumulative total: 8)
        ii. District Court trial appearance: 0 (Cumulative total: 11)
        iii. PTAB Court trial/deposition appearance: 0 (Cumulative total: 17)
    c. Technology: LCD display layouts, designs for optical and electronic fabrication, design, IC (drivers, electrical wiring, electrodes), and packaging.
162. Active case work: 2Q2023 – 2Q2023; *138 East LCD Advancements Limited v. Chongqing HKC Optoelectronics Technology Ltd.,* Declaration for IPR patent owner response (IPR2023-00475) for US patent #7,116,390 as patent owner, (retained by 138 East LCD Advancements Ltd.) – retained by counsel Robins Kaplan LLP
    a. Deposition: 0 (Cumulative total: 63)
    b. Trial/Hearing/court/PTAB appearance: 0 (Cumulative total: 37)
        i. ITC trial appearance: 0 (Cumulative total: 8)
        ii. District Court trial appearance: 0 (Cumulative total: 11)
        iii. PTAB Court trial/deposition appearance: 0 (Cumulative total: 17)
    c. Technology: LCD display layouts, designs for optical and electronic fabrication, design, IC (drivers, electrical wiring, electrodes), and packaging.

Professor (Dr. Dr.) Michael S. Lebby, B. Eng. (Hons), MBA, Ph.D., D. Eng, Fellow NAI, IEEE, Optica (OSA); C. Eng.
1 Hawthorne St., unit 25a, San Francisco, CA 94105, USA; mobile +1 717 839 7078; drmlebby@gmail.com

163. Active case work: 2Q2023 – 3Q2023; *Samsung Display Company Limited v. Mianyang BOE Optoelectronics Technology Co., Ltd.,* ITC 337-TA-1351 (filed: 27th Jan 2023), "Certain Active Matrix Organic Light-Emitting Diode Display Panels And Modules For Mobile Devices, And Components Thereof", (retained by plaintiff Samsung Display Company Ltd.) – retained by counsel Covington and Burling LLP.
    a. Deposition: 0 (Cumulative total: 63)
    b. Trial/Hearing/court/PTAB appearance: 0 (Cumulative total: 37)
        i. ITC trial appearance: 0 (Cumulative total: 8)
        ii. District Court trial appearance: 0 (Cumulative total: 11)
        iii. IPR/PTAB trial/deposition: 0 (Cumulative total: 17)
    c. Technology: Active-matrix OLED display panels and modules for mobile products and devices.
164. Active case work: 2Q2023 – 3Q2023; *Hesai Group, Hesai Technology Co., Ltd. and Hesai Inc. v. Ouster,* ITC 337-TA-1363 (filed: 11th May 2023), "Certain LiDAR (Light Detection And Ranging) Systems And Components Thereof", (retained by respondent Hesai et al.) – retained by counsel Quinn Emanuel Urquhart & Sullivan, LLP.
    c. Deposition: 1 (Cumulative total: 64)
    d. Trial/Hearing/court/PTAB appearance: 1 (Cumulative total: 38)
        i. ITC trial appearance: 0 (Cumulative total: 8)
        ii. District Court trial appearance: 0 (Cumulative total: 11)
        iii. PTAB Court trial/deposition appearance: 0 (Cumulative total: 18)
    e. Technology: Optical and electrical device, optics, and package designs for LIDAR based self-driving vehicles. Rotating LIDAR unit, magnetic rotor/stator design, electronic pcbs, bulk, micro-optics, and optical and electronic system design.
165. Active case work: 4Q2023 – 2Q2024; *Samsung Electronics v. Pictiva Display International,* 2-23-CV-00495-1 (E.D. Tx), (filed: 12th Dec 2022), "Certain LiDAR (Light Detection And Ranging) Systems And Components Thereof", (retained by defendant Samsung Electronics) – retained by counsel Covington and Burling LLP.
    a. Deposition: 0 (Cumulative total: 64)
    b. Trial/Hearing/court/PTAB appearance: 0 (Cumulative total: 38)
        i. ITC trial appearance: 0 (Cumulative total: 8)
        ii. District Court trial appearance: 0 (Cumulative total: 11)
        iii. PTAB Court trial/deposition appearance: 0 (Cumulative total: 18)
    c. Technology: Based on OLED displays, color emission, conversion, packaging, optical performance, phosphor characteristics, display panel designs. Patents asserted include: U.S. Patent Nos. 6,949,389 and 8,314,547
166. Active case work: 3Q2023 – 3Q2024; *Innoscience Zhuhai Technology Company, Ltd v. Efficient Power Conversion Corporation (EPC),* ITC 337-TA-1366 (filed: 3rd July 2023), "Semiconductor Devices and Products Containing the Same", (retained by respondent Innoscience) – retained by counsel Finnegan, Henderson, Farabow, Garrett & Dunner, LLP.
    a. Deposition: 1 (Cumulative total: 65)
    b. Trial/Hearing/court/PTAB appearance: 1 (Cumulative total: 39)
        i. ITC trial appearance: 1 (Cumulative total: 9)
        ii. District Court trial appearance: 0 (Cumulative total: 11)
        iii. PTAB Court trial/deposition appearance: 0 (Cumulative total: 18)
    c. Technology: Gallium Nitride (GaN) based power field effect transistors (FETs), their design, fabrication, characterization, and performance. Particular emphasis on enhancement mode GaN FETs and their operation, application, and product development.
167. Active case work: 3Q2023 – 4Q2024; *Innoscience Zhuhai Technology Company, Ltd v. Efficient Power Conversion Corporation (EPC),* 2-23-CV-04026 (C.D Ca), (filed: 3rd July 2023), (retained by defendant Innoscience) – retained by counsel Finnegan, Henderson, Farabow, Garrett & Dunner, LLP.
    a. Deposition: 0 (Cumulative total: 65)
    b. Trial/Hearing/court/PTAB appearance: 0 (Cumulative total: 39)
        i. ITC trial appearance: 0 (Cumulative total: 9)
        ii. District Court trial appearance: 0 (Cumulative total: 11)
        iii. PTAB Court trial/deposition appearance: 0 (Cumulative total: 18)
    c. Technology: Gallium Nitride (GaN) based power field effect transistors (FETs), their design, fabrication, characterization, and performance. Particular emphasis on enhancement mode GaN FETs and their operation, application, and product development.
168. Active case work: 2Q2023 – 4Q2023; *Littlefuse, Inc., v. Mersen USA EP Corp*, USDC D. Mass. Case No. 1:17-CV-12375-IT, (filed: 9th Dec 2022), (retained by defendant Littlefuse) – retained by counsel Bejin Bieneman PLC ("B2IP").
    a. Deposition: 0 (Cumulative total: 65)
    b. Trial/Hearing/court/PTAB appearance: 0 (Cumulative total: 39)
        i. ITC trial appearance: 0 (Cumulative total: 9)
        ii. District Court trial appearance: 0 (Cumulative total: 11)
        iii. PTAB Court trial/deposition appearance: 0 (Cumulative total: 18)

Professor (Dr. Dr.) Michael S. Lebby, B. Eng. (Hons), MBA, Ph.D., D. Eng, Fellow NAI, IEEE, Optica (OSA); C. Eng.
1 Hawthorne St., unit 25a, San Francisco, CA 94105, USA; mobile +1 717 839 7078; drmlebby@gmail.com

c. Technology: Electrical fuse technology, with extruded metal and alloys, design of mechanical structure. Application with solar cell industrial equipment.

169. Active case work: 2Q2023 – 1Q2025; *Immervision., v. Apple Inc.*, 1:21-CV-01484, (D. De.), (filed: 28th April 2022), (retained by plaintiff) – retained by counsel Panitch Schwarze Belisario & Nadel LLP.
    a. Deposition: 0 (Cumulative total: 65)
    b. Trial/Hearing/court/PTAB appearance: 0 (Cumulative total: 39)
        i. ITC trial appearance: 0 (Cumulative total: 9)
        ii. District Court trial appearance: 0 (Cumulative total: 11)
        iii. PTAB Court trial/deposition appearance: 0 (Cumulative total: 18)
    c. Technology: Optical lenses for ultra-wide angle imaging including wide angle panomorphic lenses, imaging techniques, and design of the optics. Application market verticals include mobile phones, portable display accessories and other portable consumer equipment.
170. Active case work: 2Q2023 – 3Q2023; *Samsung v. Apt-ability dba d/b/a Mobile Sentrix et al,* ITC 337-TA-1351 (filed: 3rd July 2023), "Certain Active Matrix Organic Light-Emitting Diode Display Panels And Modules For Mobile Devices, And Components Thereof", (retained by respondent Samsung) – retained by counsel Covington and Burling, LLP.
    a. Deposition: 0 (Cumulative total: 65)
    b. Trial/Hearing/court/PTAB appearance: 0 (Cumulative total: 39)
        i. ITC trial appearance: 0 (Cumulative total: 9)
        ii. District Court trial appearance: 0 (Cumulative total: 11)
        iii. PTAB Court trial/deposition appearance: 0 (Cumulative total: 18)
    c. Technology: OLED display panels for mobile devices including display electronics, backlights, panel design, and OLED pixel fabrication. Emphasis on pixel shape, layout and display pixel structure.
171. Active case work: 1Q2024 – 1Q2024; *Immervision., v. Apple Inc.*, Declaration for IPR patent owner response (IPR2023-00472) for US patent #10,795,120 as patent owner, (retained by plaintiff) – retained by counsel Panitch Schwarze Belisario & Nadel LLP.
    a. Deposition: 0 (Cumulative total: 65)
    b. Trial/Hearing/court/PTAB appearance: 0 (Cumulative total: 39)
        i. ITC trial appearance: 0 (Cumulative total: 9)
        ii. District Court trial appearance: 0 (Cumulative total: 11)
        iii. PTAB Court trial/deposition appearance: 0 (Cumulative total: 18)
    c. Technology: Optical lenses for ultra-wide angle imaging including wide angle panomorphic lenses, imaging techniques, and design of the optics. Application market verticals include mobile phones, portable display accessories and other portable consumer equipment.
172. Active case work: 1Q2024 – 4Q2024; *Innoscience Zhuhai Technology Company, Ltd v. Infineon,* Declaration for IPR petitioner response (IPR2024-00975) for US patent #9,899,481 as petitioner, (retained by defendant Innoscience) – retained by counsel Finnegan, Henderson, Farabow, Garrett & Dunner, LLP.
    a. Deposition: 0 (Cumulative total: 65)
    b. Trial/Hearing/court/PTAB appearance: 0 (Cumulative total: 39)
        i. ITC trial appearance: 0 (Cumulative total: 9)
        ii. District Court trial appearance: 0 (Cumulative total: 11)
        iii. PTAB Court trial/deposition appearance: 0 (Cumulative total: 18)
    c. Technology: Gallium Nitride (GaN) based power field effect transistors (FETs), their design, fabrication, characterization, and performance. Particular emphasis on enhancement mode GaN FETs and their operation, application, and product development.
173. Active case work: 1Q2023 – 4Q2024; *Polaris Powerled Technologies llc (plaintiff), v. Samsung Electronics America Inc, Samsung Display Company Ltd, Samsung Electronics Company, Ltd. (defendants)*, 2:22-CV-00469-JRG, (E.D. Tx.), (filed: 28th June 2023), (retained by defendant) – retained by counsel Baker Botts LLP.
    a. Deposition: 1 (Cumulative total: 66)
    b. Trial/Hearing/court/PTAB appearance: 0 (Cumulative total: 39)
        i. ITC trial appearance: 0 (Cumulative total: 9)
        ii. District Court trial appearance: 0 (Cumulative total: 11)
        iii. PTAB Court trial/deposition appearance: 0 (Cumulative total: 18)
    d. Technology: OLED displays, OLED driver circuits, OLED red, green, blue pixels and associated display design and packaging technologies. Tear down of OLED displays for consumer cameras.
174. Active case work: 2Q2024 – 3Q2024; *Ikea North America Services LLC., Ikea US Retail LLC., v. Everlight Electronics et al.;* Declaration for IPR patent owner response (IPR2024-00XXXX) for US patent #9,640,733 as petitioner, (retained by defendant Ikea US Retail LLC et al.) – retained by defendant counsel Flaster Greenberg LLP
    a. Deposition: 0 (Cumulative total: 66)
    b. Trial/Hearing/court/PTAB appearance: 0 (Cumulative total: 39)
        i. ITC trial appearance: 0 (Cumulative total: 9)
        ii. District Court trial appearance: 0 (Cumulative total: 11)
        iii. PTAB Court trial/deposition appearance: 0 (Cumulative total: 18)

Professor (Dr. Dr.) Michael S. Lebby, B. Eng. (Hons), MBA, Ph.D., D. Eng, Fellow NAI, IEEE, Optica (OSA); C. Eng.
1 Hawthorne St., unit 25a, San Francisco, CA 94105, USA; mobile +1 717 839 7078; drmlebby@gmail.com

c. Technology: LED surface mount packaging, LED GaN/InGaN chips, and associated LED lighting performance specifications.

175. Active case work: 2Q2024 – 3Q2024; *Ikea North America Services LLC., Ikea US Retail LLC., v. Everlight Electronics et al.;* Declaration for IPR patent owner response (IPR2024-00XXXX) for US patent #7,554,126 as petitioner, (retained by defendant Ikea US Retail LLC et al.) – retained by defendant counsel Flaster Greenberg LLP
    a. Deposition: 0 (Cumulative total: 66)
    b. Trial/Hearing/court/PTAB appearance: 0 (Cumulative total: 39)
        i. ITC trial appearance: 0 (Cumulative total: 9)
        ii. District Court trial appearance: 0 (Cumulative total: 11)
        iii. PTAB Court trial/deposition appearance: 0 (Cumulative total: 18)
    c. Technology: LED surface mount packaging, LED GaN/InGaN chips, and associated LED lighting performance specifications.
176. Active case work: 3Q2024 – 1Q2025; *Semisilicon Technology Group v. Xu Peicheng (Hong Kong) Optoelectronic Technology Co. Limited;* Declaration for IPR patent owner response (IPR2024-00156) for US patent #8,884,546, (retained by defendant SemiSilicon Technology Group) – retained by defendant counsel Finnegan LLP
    a. Deposition: 0 (Cumulative total: 66)
    b. Trial/Hearing/court/PTAB appearance: 0 (Cumulative total: 39)
        i. ITC trial appearance: 0 (Cumulative total: 9)
        ii. District Court trial appearance: 0 (Cumulative total: 11)
        iii. PTAB Court trial/deposition appearance: 0 (Cumulative total: 18)
    c. Technology: LED surface mount and through-pin packaging (3/5mm as well as surface mount packages), COB (chip-on-board), flexible boards, LED GaN/InGaN chips, and associated LED control chips/slave chips, synchronous logic operation for LED strings and string architectures.
177. Active case work: 3Q2024 – 1Q2025; *Semisilicon Technology Group v. Xu Peicheng (Hong Kong) Optoelectronic Technology Co. Limited;* Declaration for reexam (RE) patent owner (Reexamination control #90/015,328 for US patent #8,124,988), (retained by defendant SemiSilicon Technology Group) – retained by defendant counsel Finnegan LLP
    a. Deposition: 0 (Cumulative total: 66)
    b. Trial/Hearing/court/PTAB appearance (reexam interview): 1 (Cumulative total: 40)
        i. ITC trial appearance: 0 (Cumulative total: 9)
        ii. District Court trial appearance: 0 (Cumulative total: 11)
        iii. PTAB Court trial/deposition appearance: 1 (Cumulative total: 19)
    c. Technology: LED surface mount and through-pin packaging (3/5mm as well as surface mount packages), COB (chip-on-board), flexible boards, LED GaN/InGaN chips, and associated LED lighting performance specifications including waterproofing.
178. Active case work: 1Q2023 – 4Q2023; *Samsung v. BOE Technology Group Ltd, BMOT f/k/a Kunming BOE Display Technology, BOE Technology America Inc., Chengdu BOE Optoeletronics Technology Co., Ltd., Chongqing BOE Optoeletronics Technology Co., Ltd., Mianyang BOE Optoelectronics Technology Co., Ltd., Ordos Yuansheng Optoelectronics Co., Ltd., Wuhan BOE Optoeletronics Technology Co., Ltd.,* ITC 337-TA-1378 (filed: 31st October 2023), "Certain Organic Light-Emitting Diode Display Modules and Components Thereof", (retained by Complainant Samsung) – retained by counsel Quinn Emanual, LLP.
    a. Deposition: 2 (Cumulative total: 68)
    b. Trial/Hearing/court/PTAB appearance: 1 (Cumulative total: 41)
        i. ITC trial appearance: 1 (Cumulative total: 10)
        ii. District Court trial appearance: 0 (Cumulative total: 11)
        iii. PTAB Court trial/deposition appearance: 0 (Cumulative total: 18)
    c. Technology: Manufacturing of OLED display panels (both half 6G carrier glass FMM (fine metal mask) mobile OLEDs and silicon based micro-OLEDs) for mobile devices including fabrication process, tool design, factory layout, technical yield performance, evaporation, encapsulation, pixel formation, cell cutting using CO2 lasers, etc. Emphasis on trade secrets and the misappropriation of trade secrets.
179. Active case work: 4Q2024 – 2Q2025; *Innoscience (Suzhou) Technology Company, Ltd.; Innoscience Zhuhai Technology Company, Ltd., and Innoscience America Inc., v. Infineon Technologies Austria AG., (defendants)* 3-24-CV-01553 (N.D. Cal.), (retained by defendant Innoscience) – retained by counsel Finnegan, Henderson, Farabow, Garrett & Dunner, LLP.
    a. Deposition: 0 (Cumulative total: 68)
    b. Trial/Hearing/court/PTAB appearance: 0 (Cumulative total: 41)
        i. ITC trial appearance: 0 (Cumulative total: 10)
        ii. District Court trial appearance: 0 (Cumulative total: 11)
        iii. PTAB Court trial/deposition appearance: 0 (Cumulative total: 18)
    c. Technology: Gallium Nitride (GaN) based power field effect transistors (FETs), their design, fabrication, characterization, and performance. Particular emphasis on enhancement mode GaN FETs and their operation, application, and product development.

Professor (Dr. Dr.) Michael S. Lebby, B. Eng. (Hons), MBA, Ph.D., D. Eng, Fellow NAI, IEEE, Optica (OSA); C. Eng.
1 Hawthorne St., unit 25a, San Francisco, CA 94105, USA; mobile +1 717 839 7078; drmlebby@gmail.com

180. Active case work: 4Q2024 – 1Q2025; *Innoscience (Suzhou) Technology Company, Ltd.; Innoscience Zhuhai Technology Company, Ltd., and Innoscience America Inc., v. Infineon Technologies Austria AG.,* ITC 337-TA-3763 (filed: 26th July 2024), "*Certain Semiconductor Devices and Products Containing the Same"*, International Trade Commission), (retained by respondent Innoscience) – retained by counsel Finnegan, Henderson, Farabow, Garrett & Dunner, LLP.
    a. Deposition: 0 (Cumulative total: 68)
    b. Trial/Hearing/court/PTAB appearance: 0 (Cumulative total: 41)
        i. ITC trial appearance: 0 (Cumulative total: 10)
        ii. District Court trial appearance: 0 (Cumulative total: 11)
        iii. PTAB Court trial/deposition appearance: 0 (Cumulative total: 18)
    a. Technology: Gallium Nitride (GaN) based power field effect transistors (FETs), their design, fabrication, characterization, and performance. Particular emphasis on enhancement mode GaN FETs and their operation, application, and product development.
181. Active case work: 3Q2024 – 2Q2025; *Samsung Electronics Co., Ltd.; Samsung Electronics America, Inc.; and Samsung Semiconductor, Inc. v. SiOnyx, LLC.,* ITC 337-TA-1403 (filed: 30th April 2024), "*Certain Sensors with Pixels and Products Containing Same"*, International Trade Commission), (retained by respondent Samsung) – retained by counsel Covington and Burling, LLP.
    a. Deposition: 0 (Cumulative total: 68)
    b. Trial/Hearing/court/PTAB appearance: 0 (Cumulative total: 41)
        i. ITC trial appearance: 0 (Cumulative total: 10)
        ii. District Court trial appearance: 0 (Cumulative total: 11)
        iii. PTAB Court trial/deposition appearance: 0 (Cumulative total: 18)
    a. Technology: Silicon sensors and pixels for CMOS sensors with silicon fabrication that includes impact, wafer bonding, dielectric doping, wet and dry etching, passivation, optics, optical reflection, optical refraction, as well as general device characteristics for arrays.
182. Active case work: 3Q2024 – 2Q2025; *Samsung Electronics Co., Ltd.; Samsung Electronics America, Inc.; and Samsung Semiconductor, Inc. v. SiOnyx, LLC.,* Declaration for IPR patent owner response (IPR2024-01431) for US patent #11,069,737, (retained by defendant Samsung) – retained by defendant counsel Covington and Burling, LLP.
    a. Deposition: 0 (Cumulative total: 68)
    b. Trial/Hearing/court/PTAB appearance: 0 (Cumulative total: 41)
        i. ITC trial appearance: 0 (Cumulative total: 10)
        ii. District Court trial appearance: 0 (Cumulative total: 11)
        iii. PTAB Court trial/deposition appearance: 0 (Cumulative total: 18)
    a. Technology: Silicon sensors and pixels for CMOS sensors with silicon fabrication that includes impact, wafer bonding, dielectric doping, wet and dry etching, passivation, optics, optical reflection, optical refraction, as well as general device characteristics for arrays.
183. Active case work: 3Q2024 – 2Q2025; *Samsung Electronics Co., Ltd.; Samsung Electronics America, Inc.; and Samsung Semiconductor, Inc. v. SiOnyx, LLC.,* Declaration for IPR patent owner response (IPR2024-XXXXX) for US patent #10,347,682, (retained by defendant Samsung) – retained by defendant counsel Covington and Burling, LLP.
    c. Deposition: 0 (Cumulative total: 68)
    d. Trial/Hearing/court/PTAB appearance: 0 (Cumulative total: 41)
        i. ITC trial appearance: 0 (Cumulative total: 10)
        ii. District Court trial appearance: 0 (Cumulative total: 11)
        iii. PTAB Court trial/deposition appearance: 0 (Cumulative total: 18)
    a. Technology: Silicon sensors and pixels for CMOS sensors with silicon fabrication that includes impact, wafer bonding, dielectric doping, wet and dry etching, passivation, optics, optical reflection, optical refraction, as well as general device characteristics for arrays.
184. Active case work: 3Q2024 – 2Q2025; *Samsung Electronics Co., Ltd.; Samsung Electronics America, Inc.; and Samsung Semiconductor, Inc. v. SiOnyx, LLC.,* Declaration for IPR patent owner response (IPR2024-XXXXX) for US patent #11,721,714, (retained by defendant Samsung) – retained by defendant counsel Covington and Burling, LLP.
    e. Deposition: 0 (Cumulative total: 68)
    f. Trial/Hearing/court/PTAB appearance: 0 (Cumulative total: 41)
        i. ITC trial appearance: 0 (Cumulative total: 10)
        ii. District Court trial appearance: 0 (Cumulative total: 11)
        iii. PTAB Court trial/deposition appearance: 0 (Cumulative total: 18)
    a. Technology: Silicon sensors and pixels for CMOS sensors with silicon fabrication that includes impact, wafer bonding, dielectric doping, wet and dry etching, passivation, optics, optical reflection, optical refraction, as well as general device characteristics for arrays.
185. Active case work: 4Q2024 – 2Q2025; *Commscope Inc., Commscope Inc. of North Carolina, and Commscope Technologies LLC v. Belden Canada ULC., (plaintiff)* 1-22-CV-00782 (D. Del.), (retained by defendant Commscope) – retained by counsel Carlson Caspers, LLP.

Professor (Dr. Dr.) Michael S. Lebby, B. Eng. (Hons), MBA, Ph.D., D. Eng, Fellow NAI, IEEE, Optica (OSA); C. Eng.
1 Hawthorne St., unit 25a, San Francisco, CA 94105, USA; mobile +1 717 839 7078; drmlebby@gmail.com

a. Deposition: 2 (Cumulative total: 70)
b. Trial/Hearing/court/PTAB appearance: 0 (Cumulative total: 41)
    i. ITC trial appearance: 0 (Cumulative total: 10)
    ii. District Court trial appearance: 0 (Cumulative total: 11)
    iii. PTAB Court trial/deposition appearance: 0 (Cumulative total: 18)
c. Technology: Electronic and electrical connectors, specifically RJ-45 and associated structure, operation, pins, springs, polymer molding and operational characteristics.

186. Active case work: 3Q2023 – 3Q2023; *Hesai Group, Hesai Technology Co., Ltd. and Hesai Inc. v. Ouster,* Declaration for IPR patent owner response (IPR2023-01422) for US patent #11,287,515, (retained by petitioner Hesai) – retained by petitioner counsel Quinn Emanuel, LLP.
    a. Deposition: 0 (Cumulative total: 70)
    b. Trial/Hearing/court/PTAB appearance: 0 (Cumulative total: 41)
        i. ITC trial appearance: 0 (Cumulative total: 10)
        ii. District Court trial appearance: 0 (Cumulative total: 11)
        iii. PTAB Court trial/deposition appearance: 0 (Cumulative total: 18)
    c. Technology: Optical and electrical device, optics, and package designs for LIDAR based self-driving vehicles. Rotating LIDAR unit, magnetic rotor/stator design, electronic pcbs, bulk, micro-optics, and optical and electronic system design.
187. Active case work: 3Q2024 – 3Q2024; *Acuity Brands Lighting, Inc., v. Seoul Semiconductor Co. Ltd., and Seoul Viosys Co. Ltd.,* Exploration for IPR (IPR2024-XXXXX) for US patent #x,xxx,xxx (retained by Acuity Brands Lighting, Inc.) – retained by counsel Duane Morris, LLP.
    g. Deposition: 0 (Cumulative total: 70)
    h. Trial/Hearing/court/PTAB appearance: 0 (Cumulative total: 41)
        i. ITC trial appearance: 0 (Cumulative total: 10)
        ii. District Court trial appearance: 0 (Cumulative total: 11)
        iii. PTAB Court trial/deposition appearance: 0 (Cumulative total: 18)
    a. Technology: LED lighting, LED devices, light characteristics, luminaires, GaN blue LED chips and associated SMT packaging.
188. Active case work: 4Q2024 – 2Q2025; Maxell Ltd., (plaintiff) v. Coretronic Corp., and Optoma Corp., 5-24-CV-00088-RWS-JBB (E.D. Tx.), (retained by plaintiff Mexell) – retained by counsel Mayer Brown, LLP
    a. Deposition: 2 (Cumulative total: 72)
    b. Trial/Hearing/court/PTAB appearance: 0 (Cumulative total: 41)
        i. ITC trial appearance: 0 (Cumulative total: 10)
        ii. District Court trial appearance: 0 (Cumulative total: 11)
        iii. PTAB Court trial/deposition appearance: 0 (Cumulative total: 18)
    c. Technology: Laser projection display systems, filters, optical beams, lenses, components, organic phosphor material, wavelength conversion, lighting properties.
189. Active case work: 1Q2025 – present; Credo AI Corporation, (Defendant) v. Credo Technology Group)., 3-24-CV-02032-CRB (N.D. Ca.), filed 28th October 2024, (retained by defendant Credo AI Corp.) – retained by counsel Pranger Law, PC
    a. Deposition: 0 (Cumulative total: 72)
    b. Trial/Hearing/court/PTAB appearance: 0 (Cumulative total: 41)
        i. ITC trial appearance: 0 (Cumulative total: 10)
        ii. District Court trial appearance: 0 (Cumulative total: 11)
        iii. PTAB Court trial/deposition appearance: 0 (Cumulative total: 18)
    c. Technology: Artificial Intelligence (AI) hardware for data center applications, DSP and ASIC chips, SerDes and retimer chips, AECs (Active Electric Cables), AOC chips and chipsets, digital signal processors, PCIe technology, servers, routers, chassis fiber management, pluggable transceiver modules.
190. Active case work: 1Q2025 – present; Advanced Integrated Circuit Process (AICP) LLC, (plaintiff) v. United Microelectronics Corporation (UMC) and Taiwan Semiconductor Manufacturing Company (TSMC) Ltd., 2-24-CV-00730-JRG (E.D. Tx.), filed 20th March 2024, (retained by plaintiff AICP) – retained by counsel Susman Godfrey LLP
    a. Deposition: 0 (Cumulative total: 72)
    b. Trial/Hearing/court/PTAB appearance: 0 (Cumulative total: 41)
        i. ITC trial appearance: 0 (Cumulative total: 10)
        ii. District Court trial appearance: 0 (Cumulative total: 11)
        iii. PTAB Court trial/deposition appearance: 0 (Cumulative total: 18)
    c. Technology: CMOS process fabrication technology, implant techniques, dielectric depositions and sputtering, metallization, CMOS FET operation, CMOS FET design
191. Active case work: 1Q2025 – 2Q2025; REC Solar (defendant) v. Maxeon Solar Pte. Ltd., 2-24-CV-00260 (E.D. Tx.), filed 19th April 2024, (retained by defendant REC Solar) – retained by counsel Finnegan LLP
    a. Deposition: 0 (Cumulative total: 72)
    b. Trial/Hearing/court/PTAB appearance: 0 (Cumulative total: 41)

Professor (Dr. Dr.) Michael S. Lebby, B. Eng. (Hons), MBA, Ph.D., D. Eng, Fellow NAI, IEEE, Optica (OSA); C. Eng.
1 Hawthorne St., unit 25a, San Francisco, CA 94105, USA; mobile +1 717 839 7078; drmlebby@gmail.com

i. ITC trial appearance: 0 (Cumulative total: 10)
ii. District Court trial appearance: 0 (Cumulative total: 11)
iii. PTAB Court trial/deposition appearance: 0 (Cumulative total: 18)

c. Technology: Silicon solar cell design, TopCon technology, fabrication and processing techniques, implants, diffusion, tunneling junctions, tunneling mechanisms.

192. Active case work: 3Q2024 – 2Q2025; Samsung Electronics Co. Ltd., Samsung Electronics America Inc., Samsung Semiconductor Inc., and Samsung Austin Semiconductor LLC., (petitioner) v. *W & W Sens Devices Inc.,* IPR (IPR2025-XXXXX) for US patent #10,446,700 (retained by Samsung Electronics Co., Ltd.) – retained by counsel Finnegan, LLP.
    a. Deposition: 0 (Cumulative total: 72)
    b. Trial/Hearing/court/PTAB appearance: 0 (Cumulative total: 41)
        i. ITC trial appearance: 0 (Cumulative total: 10)
        ii. District Court trial appearance: 0 (Cumulative total: 11)
    c. Photodetectors, quantum efficiency, microstructure enhanced photodetectors, integrated devices, arrays of photodetectors, active electronic circuits, monolithic integration, holes for collecting photons, band-pass filters, SiGe, BiCMOS, CMOS, III-V materials fabrication and processing. Fabrication of pillars and pillar-holes.
193. Active case work: 3Q2024 – 2Q2025; Samsung Electronics Co. Ltd., Samsung Electronics America Inc., Samsung Semiconductor Inc., and Samsung Austin Semiconductor LLC., (petitioner) v. *W & W Sens Devices Inc.,* IPR (IPR2025-XXXXX) for US patent #10,468,543 (retained by Samsung Electronics Co., Ltd.) – retained by counsel Finnegan, LLP.
    a. Deposition: 0 (Cumulative total: 72)
    b. Trial/Hearing/court/PTAB appearance: 0 (Cumulative total: 41)
        i. ITC trial appearance: 0 (Cumulative total: 10)
        ii. District Court trial appearance: 0 (Cumulative total: 11)
    c. Photodetectors, quantum efficiency, microstructure enhanced photodetectors, integrated devices, arrays of photodetectors, active electronic circuits, monolithic integration, holes for collecting photons, band-pass filters, SiGe, BiCMOS, CMOS, III-V materials fabrication and processing. Fabrication of pillars and pillar-holes.
194. Active case work: 3Q2024 – 2Q2025; Samsung Electronics Co. Ltd., Samsung Electronics America Inc., Samsung Semiconductor Inc., and Samsung Austin Semiconductor LLC., (petitioner) v. *W & W Sens Devices Inc.,* IPR (IPR2025-XXXXX) for US patent #11,621,360 (retained by Samsung Electronics Co., Ltd.) – retained by counsel Finnegan, LLP.
    a. Deposition: 0 (Cumulative total: 72)
    b. Trial/Hearing/court/PTAB appearance: 0 (Cumulative total: 41)
        i. ITC trial appearance: 0 (Cumulative total: 10)
        ii. District Court trial appearance: 0 (Cumulative total: 11)
    c. Photodetectors, quantum efficiency, microstructure enhanced photodetectors, integrated devices, arrays of photodetectors, active electronic circuits, monolithic integration, holes for collecting photons, band-pass filters, SiGe, BiCMOS, CMOS, III-V materials fabrication and processing. Fabrication of pillars and pillar-holes.
195. Active case work: 4Q24 – 1Q2025; Abalance Corporation (defendant) v. Shanghai Jinko Green Entergy Enterprise Management Co., Ltd., 3-24-CV-08828-JSC (N.D. Ca.), filed 6th December 2024, (retained by defendant Abalance Corporation (together with WWB Corporation, Fuji Solar Co. Ltd., VSEUN Solar USA inc., TOYO Co. Ltd., and TOYO Solar Company Ltd., f/k/a Vietnam Sunergy cell Company Ltd and Vietnam Sunergy (Bac Ninh) Company Ltd.)) – retained by counsel Sidley Austin LLP
    a. Deposition: 0 (Cumulative total: 72)
    b. Trial/Hearing/court/PTAB appearance: 0 (Cumulative total: 41)
        i. ITC trial appearance: 0 (Cumulative total: 10)
        ii. District Court trial appearance: 0 (Cumulative total: 11)
        iii. PTAB Court trial/deposition appearance: 0 (Cumulative total: 18)
    c. Technology: Silicon solar cell design, TopCon technology, structured substrates, textured surfaces, pyramid structures fabricated in silicon, fabrication and processing techniques, implants, diffusion, tunneling junctions, tunneling mechanisms.
196. Active case work: 4Q24 – 1Q25; John Alms (plaintiff) v. Luminar Technologies Inc., Mike McAuliffe, Austin Russell, and Jason Eichenholz, 6-23-CV-00982-PGB-LHP (M.D. Fl.), filed 26th May 2023, (retained by plaintiff John Alms) – retained by counsel Sidley Austin LLP
    a. Deposition: 0 (Cumulative total: 72)
    b. Trial/Hearing/court/PTAB appearance: 0 (Cumulative total: 41)
        i. ITC trial appearance: 0 (Cumulative total: 10)
        ii. District Court trial appearance: 0 (Cumulative total: 11)
        iii. PTAB Court trial/deposition appearance: 0 (Cumulative total: 18)
    c. Technology: Lidar sensors, DFB laser chips and laser design, photonic packaging, photonic integrated circuits (PICs), optical sensors, LIDAR components.

Professor (Dr. Dr.) Michael S. Lebby, B. Eng. (Hons), MBA, Ph.D., D. Eng, Fellow NAI, IEEE, Optica (OSA); C. Eng.
1 Hawthorne St., unit 25a, San Francisco, CA 94105, USA; mobile +1 717 839 7078; drmlebby@gmail.com

197. Active case work: 4Q2024 – 1Q2025; Green Creative LLC and Industrial Lighting Products LLC (petitioner) v. *Seoul semiconductor Co. Ltd.,* IPR (IPR2025-00654) for US patent #8,963,196 (retained by Green Creative LLC) – retained by counsel Duane Morris, LLP.
    a. Deposition: 0 (Cumulative total: 72)
    b. Trial/Hearing/court/PTAB appearance: 0 (Cumulative total: 41)
        i. ITC trial appearance: 0 (Cumulative total: 10)
        ii. District Court trial appearance: 0 (Cumulative total: 11)
        iii. PTAB Court trial/deposition appearance: 0 (Cumulative total: 18)
    c. LEDs, solid state lighting, LED devices, LED packages, electrically connecting LEDs and packages, grooves and openings within the LED packaging, slim LED packages.
198. Active case work: 4Q24 – 2Q25; Harbor Island Dynamic LLC v. Samsung Electronics Co. Ltd., and Samsung Electronics America Inc., (defendant) 2-24-CV-00140-JRG-RSP (M.D. Fl.), filed 27th February 2024, (retained by defendant Samsung Electronics) – retained by counsel Finnegan LLP
    a. Deposition: 0 (Cumulative total: 72)
    b. Trial/Hearing/court/PTAB appearance: 0 (Cumulative total: 41)
        i. ITC trial appearance: 0 (Cumulative total: 10)
        ii. District Court trial appearance: 0 (Cumulative total: 11)
        iii. PTAB Court trial/deposition appearance: 0 (Cumulative total: 18)
    c. Technology: VLSI layouts, chamfers, bevels, trenches, STI trenches, anchor vias, via design, TSVs silicon vias, cascaded transistors
199. Active case work: 2Q2024 – 2Q2025; *Innoscience America, Inc., Innoscience Zhuhai Technology Company, Lt., Innoscience (Suzhou) Semiconductor Co., Ltd. Innoscience (Suzhou) Technology Company, Ltd., Innoscience (Suzhou) Technology Holding Co., Ltd., (respondent) v. Infineon Technologies Americas Corp., and Infineon Technologies Austria AG.,* ITC 337-TA-1414 (filed: 26th July 2024), "Certain Semiconductor Devices and Products Containing the Same", (retained by respondent Innoscience) – retained by counsel Finnegan, Henderson, Farabow, Garrett & Dunner, LLP.
    a. Deposition: 1 (Cumulative total: 73)
    b. Trial/Hearing/court/PTAB appearance: 1 (Cumulative total: 42)
        i. ITC trial appearance: 1 (Cumulative total: 11)
        ii. District Court trial appearance: 0 (Cumulative total: 11)
        iii. PTAB Court trial/deposition appearance: 0 (Cumulative total: 18)
    d. Technology: Gallium Nitride (GaN) based power field effect transistors (FETs), their design, fabrication, characterization, and performance. Particular emphasis on device design and packaging of high voltage, high power GaN FETs and their operation, application, and product development. Interdigitated fingers for source and drain contacts, refactory metallization, electrodes, ohmic contacts, non-co-planar drain electrodes.

ISSUED utility PATENTS and PUBLISHED PATENT APPLICATIONS ISSUED:

Current combined total = 341

Dr. Lebby holds over 500 issued international patents (as per search engine) in photonics and electronics, that have been derived from over 230 issued USPTO utility patents, mostly in the field of optoelectronics, photonics, and semiconductors. He has been cited by the USPTO to be in the most prolific 75 inventors in USA from 1988-1997.

Recent activity (data center applications, high-performance computing, data communications related patents highlighted in italics)

1	US-11974508-B2	Preview	PDF	*Josephson Junction using molecular beam epitaxy*
2	US-11927868-B2	Preview	PDF	*Electro-optic polymer devices having high performance claddings, and methods of preparing the same*

Professor (Dr. Dr.) Michael S. Lebby, B. Eng. (Hons), MBA, Ph.D., D. Eng, Fellow NAI, IEEE, Optica (OSA); C. Eng.
1 Hawthorne St., unit 25a, San Francisco, CA 94105, USA; mobile +1 717 839 7078; drmlebby@gmail.com

3	US-11757008-B2	Preview	PDF	*Electronic device with 2-dimensional electron gas between polar-oriented rare-earth oxide layer grown over a semicona*
4	US-20230280605-A1	Preview	PDF	*SLOT MODULATORS WITH IMPROVED RF AND BANDWIDTH PERFORMANCE*
5	US-20230251543-A1	Preview	PDF	*Electro-Optic Polymer Devices Having High Performance Claddings, and Methods of Preparing the Same*
6	US-20230172075-A1	Preview	PDF	*Axis Josephson Junctions with Improved Smoothness*

Listed patents and patent applications (data center applications, high-performance computing, data communications related patents highlighted in italics)

1	US-11614670-B2	Preview	PDF	*Electro-optic polymer devices having high performance claddings, and methods of preparing the same*	Yi; Youngwoo et al.	2023-03-28	21
2	US-11520175-B2	Preview	PDF	*Active region-less modulator and method*	Lebby; Michael et al.	2022-12-06	62
3	US-11506918-B2	Preview	PDF	*Hybrid EO polymer modulator with ALD sealant layer*	Lebby; Michael et al.	2022-11-22	18
4	US-11495670-B2	Preview	PDF	*Integrated epitaxial metal electrodes*	Pelzel; Rodney et al.	2022-11-08	25
5	US-11435603-B2	Preview	PDF	*TFP optical transition device and method*	Leonberger; Frederick J. et al.	2022-09-06	32
6	US-11435604-B2	Preview	PDF	*Hybrid EO polymer modulator with silicon photonics*	Lebby; Michael et al.	2022-09-06	21
7	US-20220246822-A1	Preview	PDF	*Josephson Junction using Molecular Beam Epitaxy*	Lebby; Michael S. et al.	2022-08-04	10
8	US-20220187638-A1	Preview	PDF	*HYBRID EO POLYMER MODULATOR WITH ALD SEALANT LAYER*	Lebby; Michael et al.	2022-06-16	18
9	US-20220187637-A1	Preview	PDF	*HYBRID EO POLYMER MODULATOR WITH SILICON PHOTONICS*	Lebby; Michael et al.	2022-06-16	22

Professor (Dr. Dr.) Michael S. Lebby, B. Eng. (Hons), MBA, Ph.D., D. Eng, Fellow NAI, IEEE, Optica (OSA); C. Eng.
1 Hawthorne St., unit 25a, San Francisco, CA 94105, USA; mobile +1 717 839 7078; drmlebby@gmail.com

10	US-20220113566-A1	Preview	PDF	*TFP OPTICAL TRANSITION DEVICE AND METHOD*	Leonberger; Frederick J. et al.	2022-04-14	32
11	US-11262605-B2	Preview	PDF	*Active region-less polymer modulator integrated on a common PIC platform and method*	Lebby; Michael et al.	2022-03-01	32
12	US-20220052249-A1	Preview	PDF	*A-axis Josephson Junctions with Improved Smoothness*	Lebby; Michael S. et al.	2022-02-17	40
13	US-11201278-B2	Preview	PDF	*Josephson Junction using molecular beam epitaxy*	Lebby; Michael S. et al.	2021-12-14	10
14	US-11201451-B2	Preview	PDF	*Porous distributed Bragg reflectors for laser applications*	Hammond; Rich et al.	2021-12-14	20
15	US-11067748-B2	Preview	PDF	*Guide transition device and method*	Lebby; Michael et al.	2021-07-20	24
16	US-11063114-B2	Preview	PDF	III-N to rare earth transition in a semiconductor structure	Dargis; Rytis et al.	2021-07-13	23
17	US-11042051-B2	Preview	PDF	*Direct drive region-less polymer modulator methods of fabricating and materials therefor*	Lebby; Michael et al.	2021-06-22	25
18	US-20210141251-A1	Preview	PDF	*ACTIVE REGION-LESS MODULATOR AND METHOD*	Lebby; Michael et al.	2021-05-13	63
19	US-20210141250-A1	Preview	PDF	*ACTIVE REGION-LESS MODULATOR AND METHOD*	Lebby; Michael et al.	2021-05-13	29
20	US-10989871-B2	Preview	PDF	*Protection layers for polymer modulators/waveguides*	Becker; Richard et al.	2021-04-27	12
21	US-20210005720-A1	Preview	PDF	ELECTRONIC DEVICE WITH 2-DIMENSIONAL ELECTRON GAS BETWEEN POLAR-ORIENTED RARE-EARTH OXIDE LAYER GROWN OVER A SEMICONDUCTOR	Dargis; Rytis et al.	2021-01-07	23
22	US-10886694-B2	Preview	PDF	*Hermetic capsule and method*	Lebby; Michael	2021-01-05	17
23	US-10825912-B2	Preview	PDF	*Integrated epitaxial metal electrodes*	Pelzel; Rodney et al.	2020-11-03	20

Professor (Dr. Dr.) Michael S. Lebby, B. Eng. (Hons), MBA, Ph.D., D. Eng, Fellow NAI, IEEE, Optica (OSA); C. Eng.
1 Hawthorne St., unit 25a, San Francisco, CA 94105, USA; mobile +1 717 839 7078; drmlebby@gmail.com

24	US-20200285085-A1	Preview	PDF	*DIRECT DRIVE REGION-LESS POLYMER MODULATOR METHODS OF FABRICATING AND MATERIALS THEREFOR*	Lebby; Michael et al.	2020-09-10	25
25	US-10754093-B2	Preview	PDF	*Fabrication process of polymer based photonic apparatus and the apparatus*	Liu; Zhiming et al.	2020-08-25	12
26	US-20200183201-A1	Preview	PDF	*ACTIVE REGION-LESS POLYMER MODULATOR INTEGRATED ON A COMMON PIC PLATFORM AND METHOD*	Lebby; Michael et al.	2020-06-11	31
27	US-20200183245-A1	Preview	PDF	*ELECTRO-OPTIC POLYMER DEVICES HAVING HIGH PERFORMANCE CLADDINGS, AND METHODS OF PREPARING THE SAME*	Yi; Youngwoo et al.	2020-06-11	21
28	US-20200161417-A1	Preview	PDF	III-N TO RARE EARTH TRANSITION IN A SEMICONDUCTOR STRUCTURE	Dargis; Rytis et al.	2020-05-21	20
29	US-20200150363-A1	Preview	PDF	*CONDUCTIVE MULTI-FIBER/PORT HERMETIC CAPSULE AND METHOD*	Lebby; Michael	2020-05-14	27
30	US-20200119516-A1	Preview	PDF	*HERMETIC CAPSULE AND METHOD*	Lebby; Michael	2020-04-16	16
31	US-10615141-B2	Preview	PDF	*Pnictide buffer structures and devices for GaN base applications*	Clark; Andrew et al.	2020-04-07	16
32	US-10605987-B2	Preview	PDF	*Re-based integrated photonic and electronic layered structures*	Clark; Andrew et al.	2020-03-31	42
33	US-20200091398-A1	Preview	PDF	*JOSEPHSON JUNCTION USING MOLECULAR BEAM EPITAXY*	Lebby; Michael S. et al.	2020-03-19	10
34	US-20200088939-A1	Preview	PDF	*GUIDE TRANSITION DEVICE AND METHOD*	Lebby; Michael et al.	2020-03-19	23
35	US-20200088941-A1	Preview	PDF	*PROTECTION LAYERS FOR POLYMER MODULATORS/WAVEGUIDES*	Becker; Richard et al.	2020-03-19	12
36	US-10591755-B2	Preview	PDF	*Direct-drive polymer modulator methods of fabricating and materials therefor*	Becker; Richard et al.	2020-03-17	20
37	US-20200083668-A1	Preview	PDF	*GUIDE TRANSITION DEVICE WITH DIGITAL GRATING DEFLECTORS AND METHOD*	Lebby; Michael et al.	2020-03-12	15

Professor (Dr. Dr.) Michael S. Lebby, B. Eng. (Hons), MBA, Ph.D., D. Eng, Fellow NAI, IEEE, Optica (OSA); C. Eng.
1 Hawthorne St., unit 25a, San Francisco, CA 94105, USA; mobile +1 717 839 7078; drmlebby@gmail.com

38	US-10573686-B2	Preview	PDF	*Epitaxial AlN/cREO structure for RF filter applications*	Wang; Wang Nang et al.	2020-02-25	19
39	US-10574025-B2	Preview	PDF	*Hermetic capsule and method for a monolithic photonic integrated circuit*	Lebby; Michael	2020-02-25	17
40	US-10566944-B2	Preview	PDF	*Layer structures for RF filters fabricated using rare earth oxides and epitaxial aluminum nitride*	Pelzel; Rodney et al.	2020-02-18	28
41	US-10527786-B2	Preview	PDF	*Polymer modulator and laser integrated on a common platform and method*	Leonberger; Frederick J et al.	2020-01-07	27
42	US-10520673-B2	Preview	PDF	*Protection layers for polymer modulators/waveguides*	Becker; Richard et al.	2019-12-31	12
43	US-10509164-B2	Preview	PDF	*Guide transition device and method*	Lebby; Michael et al.	2019-12-17	23
44	US-10511146-B2	Preview	PDF	*Guide transition device with digital grating deflectors and method*	Lebby; Michael et al.	2019-12-17	16
45	US-20190353843-A1	Preview	PDF	*FABRICATION PROCESS OF POLYMER BASED PHOTONIC APPARATUS AND THE APPARTUS*	Liu; Zhiming et al.	2019-11-21	12
46	US-20190305039-A1	Preview	PDF	*EPITAXIAL AlN/cREO STRUCTURE FOR RF FILTER APPLICATIONS*	Wang; Wang Nang et al.	2019-10-03	18
47	US-10431729-B2	Preview	PDF	*Josephson junction using molecular beam epitaxy*	Lebby; Michael S. et al.	2019-10-01	10
48	US-20190278036-A1	Preview	PDF	*EMBEDDED HERMETIC CAPSULE AND METHOD*	Lebby; Michael	2019-09-12	22
49	US-20190237930-A1	Preview	PDF	*HERMETIC CAPSULE AND METHOD*	Lebby; Michael	2019-08-01	17
50	US-20190227233-A1	Preview	PDF	*RE-based Integrated Photonic and Electronic Layered Structures*	Clark; Andrew et al.	2019-07-25	41
51	US-20190221993-A1	Preview	PDF	POROUS DISTRIBUTED BRAGG REFLECTORS FOR LASER APPLICATIONS	Hammond; Rich et al.	2019-07-18	19

Professor (Dr. Dr.) Michael S. Lebby, B. Eng. (Hons), MBA, Ph.D., D. Eng, Fellow NAI, IEEE, Optica (OSA); C. Eng.
1 Hawthorne St., unit 25a, San Francisco, CA 94105, USA; mobile +1 717 839 7078; drmlebby@gmail.com

52	US-20190204506-A1	Preview	PDF	*PROTECTION LAYERS FOR POLYMER MODULATORS/WAVEGUIDES*	Becker; Richard et al.	2019-07-04	12
53	US-10332857-B2	Preview	PDF	Rare earth pnictides for strain management	Clark; Andrew et al.	2019-06-25	30
54	US-20190172923-A1	Preview	PDF	*Integrated Epitaxial Metal Electrodes*	Pelzel; Rodney et al.	2019-06-06	24
55	US-20190148913-A1	Preview	PDF	*GUIDE TRANSITION DEVICE WITH DIGITAL GRATING DEFLECTORS AND METHOD*	Lebby; Michael et al.	2019-05-16	16
56	US-20190139761-A1	Preview	PDF	Pnictide Buffer Structures and Devices for GaN Base Applications	Clark; Andrew et al.	2019-05-09	15
57	US-20190122885-A1	Preview	PDF	GROUP III SEMICONDUCTOR EPITAXY FORMED ON SILICON VIA SINGLE CRYSTAL REN AND REO BUFFER LAYERS	Dargis; Rytis et al.	2019-04-25	13
58	US-20190079243-A1	Preview	PDF	*GUIDE TRANSITION DEVICE AND METHOD*	Lebby; Michael et al.	2019-03-14	24
59	US-20190074365-A1	Preview	PDF	Integrated Epitaxial Metal Electrodes	Pelzel; Rodney et al.	2019-03-07	20
60	US-20190064436-A1	Preview	PDF	*POLYMER MODULATOR AND LASER INTEGRATED ON A COMMON PLATFORM AND METHOD*	Leonberger; Frederick J et al.	2019-02-28	26
61	US-20190028081-A1	Preview	PDF	*LAYER STRUCTURES FOR RF FILTERS FABRICATED USING RARE EARTH OXIDES AND EPITAXIAL ALUMINUM NITRIDE*	Pelzel; Rodney et al.	2019-01-24	28
62	US-10162111-B1	Preview	PDF	*Multi-fiber/port hermetic capsule sealed by metallization and method*	Lebby; Michael	2018-12-25	34
63	US-10128350-B2	Preview	PDF	Integrated epitaxial metal electrodes	Pelzel; Rodney et al.	2018-11-13	20
64	US-20180259798-A1	Preview	PDF	*DIRECT-DRIVE POLYMER MODULATOR METHODS OF FABRICATING AND MATERIALS THEREFOR*	Becker; Richard et al.	2018-09-13	20
65	US-10075143-B2	Preview	PDF	Layer structures for RF filters fabricated using rare earth oxides and epitaxial aluminum nitride	Pelzel; Rodney et al.	2018-09-11	29
66	US-20180138284-A1	Preview	PDF	Integrated Epitaxial Metal Electrodes	Pelzel; Rodney et al.	2018-05-17	19
67	US-20180012858-A1	Preview	PDF	RARE EARTH INTERLAYS FOR MECHANICALLY LAYERING DISSIMILAR SEMICONDUCTOR WAFERS	Clark; Andrew et al.	2018-01-11	15
68	US-20180013053-A1	Preview	PDF	*Josephson Junction using Molecular Beam Epitaxy*	Lebby; Michael S. et al.	2018-01-11	10
69	US-20170353002-A1	Preview	PDF	Rare Earth Pnictides for Strain Management	Clark; Andrew et al.	2017-12-07	29
70	US-20170141750-A1	Preview	PDF	LAYER STRUCTURES FOR RF FILTERS FABRICATED USING RARE EARTH OXIDES AND EPITAXIAL ALUMINUM NITRIDE	Pelzel; Rodney et al.	2017-05-18	29

Professor (Dr. Dr.) Michael S. Lebby, B. Eng. (Hons), MBA, Ph.D., D. Eng, Fellow NAI, IEEE, Optica (OSA); C. Eng.
1 Hawthorne St., unit 25a, San Francisco, CA 94105, USA; mobile +1 717 839 7078; drmlebby@gmail.com

71	US-9496132-B2	Preview	PDF	Nucleation of III-N on REO templates	Arkun; Erdem et al.	2016-11-15	9
72	US-9443939-B2	Preview	PDF	Strain compensated REO buffer for III-N on silicon	Dargis; Rytis et al.	2016-09-13	7
73	US-20160133708-A1	Preview	PDF	STRAIN COMPENSATED REO BUFFER FOR III-N ON SILICON	Dargis; Rytis et al.	2016-05-12	7
74	US-9236249-B2	Preview	PDF	III-N material grown on REN epitaxial buffer on Si substrate	Dargis; Rytis et al.	2016-01-12	9
75	US-9105471-B2	Preview	PDF	Rare earth oxy-nitride buffered III-N on silicon	Clark; Andrew et al.	2015-08-11	7
76	US-20150014676-A1	Preview	PDF	III-N MATERIAL GROWN ON REN EPITAXIAL BUFFER ON Si SUBSTRATE	Dargis; Rytis et al.	2015-01-15	10
77	US-20140357014-A1	Preview	PDF	HIGH EFFICIENCY SOLAR CELL USING IIIB MATERIAL TRANSITION LAYERS	LEBBY; MICHAEL et al.	2014-12-04	10
78	US-8889978-B2	Preview	PDF	III-V semiconductor interface with graded GeSn on silicon	Roucka; Radek et al.	2014-11-18	12
79	US-8878188-B2	Preview	PDF	REO gate dielectric for III-N device on Si substrate	Dargis; Rytis et al.	2014-11-04	8
80	US-8872308-B2	Preview	PDF	AlN cap grown on GaN/REO/silicon substrate structure	Arkun; Erdem et al.	2014-10-28	5
81	US-8835955-B2	Preview	PDF	IIIO.sub.xN.sub.y on single crystal SOI substrate and III n growth platform	Arkun; Erdem et al.	2014-09-16	10
82	US-8823055-B2	Preview	PDF	REO/ALO/A1N template for III-N material growth on silicon	Arkun; Erdem et al.	2014-09-02	7
83	US-8823025-B1	Preview	PDF	III-N material grown on AIO/AIN buffer on Si substrate	Arkun; Erdem et al.	2014-09-02	5
84	US-20140239307-A1	Preview	PDF	REO GATE DIELECTRIC FOR III-N DEVICE ON Si SUBSTRATE	DARGIS; RYTIS et al.	2014-08-28	8
85	US-20140231817-A1	Preview	PDF	III-N MATERIAL GROWN ON ALO/ALN BUFFER ON SI SUBSTRATE	Arkun; Erdem et al.	2014-08-21	5
86	US-20140231818-A1	Preview	PDF	AlN CAP GROWN ON GaN/REO/SILICON SUBSTRATE STRUCTURE	Arkun; Erdem et al.	2014-08-21	5
87	US-20140225123-A1	Preview	PDF	REO/ALO/AIN TEMPLATE FOR III-N MATERIAL GROWTH ON SILICON	Arkun; Erdem et al.	2014-08-14	10
88	US-8794010-B2	Preview	PDF	Laser cooling of modified SOI wafer	Williams; David L. et al.	2014-08-05	12
89	US-20140167057-A1	Preview	PDF	REO/ALO/AIN TEMPLATE FOR III-N MATERIAL GROWTH ON SILICON	Arkun; Erdem et al.	2014-06-19	7

Professor (Dr. Dr.) Michael S. Lebby, B. Eng. (Hons), MBA, Ph.D., D. Eng, Fellow NAI, IEEE, Optica (OSA); C. Eng.
1 Hawthorne St., unit 25a, San Francisco, CA 94105, USA; mobile +1 717 839 7078; drmlebby@gmail.com

90	US-8748900-B1	Preview	PDF	Re-silicide gate electrode for III-N device on Si substrate	Dargis; Rytis et al.	2014-06-10	10
91	US-8680507-B1	Preview	PDF	A1N inter-layers in III-N material grown on DBR/silicon substrate	Arkun; Erdem et al.	2014-03-25	6
92	US-20140076390-A1	Preview	PDF	III-V SEMICONDUCTOR INTERFACE WITH GRADED GeSn ON SILICON	Roucka; Radek et al.	2014-03-20	13
93	US-20140077240-A1	Preview	PDF	IV MATERIAL PHOTONIC DEVICE ON DBR	Roucka; Radek et al.	2014-03-20	5
94	US-20140077338-A1	Preview	PDF	Si-Ge-Sn ON REO TEMPLATE	Roucka; Radek et al.	2014-03-20	5
95	US-20140077339-A1	Preview	PDF	DELTA DOPING AT Si-Ge INTERFACE	Roucka; Radek et al.	2014-03-20	5
96	US-20140053894-A1	Preview	PDF	GRADED GeSn ON SILICON	Roucka; Radek et al.	2014-02-27	13
97	US-8637763-B2	Preview	PDF	Solar cells with engineered spectral conversion	Lebby; Michael et al.	2014-01-28	18
98	US-8636844-B1	Preview	PDF	Oxygen engineered single-crystal REO template	Dargis; Rytis et al.	2014-01-28	10
99	US-8633569-B1	Preview	PDF	AlN inter-layers in III-N material grown on REO/silicon substrate	Arkun; Erdem et al.	2014-01-21	5
100	US-20140008644-A1	Preview	PDF	OXYGEN ENGINEERED SINGLE-CRYSTAL REO TEMPLATE	Dargis; Rytis et al.	2014-01-09	10
101	US-8623747-B1	Preview	PDF	Silicon, aluminum oxide, aluminum nitride template for optoelectronic and power devices	Arkun; Erdem et al.	2014-01-07	6
102	US-20130334536-A1	Preview	PDF	SINGLE-CRYSTAL REO BUFFER ON AMORPHOUS SiOx	Dargis; Rytis et al.	2013-12-19	7
103	US-8559097-B2	Preview	PDF	Integrated pump laser and rare earth waveguide amplifier	Williams; David L. et al.	2013-10-15	10
104	US-8553741-B2	Preview	PDF	Integrated rare earth devices	Lebby; Michael	2013-10-08	9
105	US-20130248853-A1	Preview	PDF	NUCLEATION OF III-N ON REO TEMPLATES	Arkun; Erdem et al.	2013-09-26	8
106	US-8542437-B1	Preview	PDF	Earth abundant photonic structures	Lebby; Michael S. et al.	2013-09-24	21
107	US-20130214282-A1	Preview	PDF	III-N ON SILICON USING NANO STRUCTURED INTERFACE LAYER	Arkun; Erdem et al.	2013-08-22	7
108	US-8501635-B1	Preview	PDF	Modification of REO by subsequent III-N EPI process	Clark; Andrew et al.	2013-08-06	10

Professor (Dr. Dr.) Michael S. Lebby, B. Eng. (Hons), MBA, Ph.D., D. Eng, Fellow NAI, IEEE, Optica (OSA); C. Eng.
1 Hawthorne St., unit 25a, San Francisco, CA 94105, USA; mobile +1 717 839 7078; drmlebby@gmail.com

109	US-20130153918-A1	Preview	PDF	REO-Si TEMPLATE WITH INTEGRATED REO LAYERS FOR LIGHT EMISSION	Clark; Andrew et al.	2013-06-20	9
110	US-8455756-B2	Preview	PDF	High efficiency solar cell using IIIB material transition layers	Lebby; Michael et al.	2013-06-04	10
111	US-20130099357-A1	Preview	PDF	STRAIN COMPENSATED REO BUFFER FOR III-N ON SILICON	Dargis; Rytis et al.	2013-04-25	7
112	US-20130071960-A1	Preview	PDF	INTEGRATED RARE EARTH DEVICES	LEBBY; MICHAEL	2013-03-21	10
113	US-20130062609-A1	Preview	PDF	III-N FET ON SILICON USING FIELD SUPPRESSING REO	Smith; Robin et al.	2013-03-14	10
114	US-20130062610-A1	Preview	PDF	LATTICE MATCHED CRYSTALLINE REFLECTOR	Clark; Andrew et al.	2013-03-14	11
115	US-8394194-B1	Preview	PDF	Single crystal reo buffer on amorphous SiO.sub.x	Dargis; Rytis et al.	2013-03-12	7
116	US-20130032858-A1	Preview	PDF	RARE EARTH OXY-NITRIDE BUFFERED III-N ON SILICON	Clark; Andrew et al.	2013-02-07	8
117	US-8331410-B2	Preview	PDF	Spontaneous/stimulated light emitting .mu.-cavity device	Lebby; Michael et al.	2012-12-11	8
118	US-8331413-B2	Preview	PDF	Integrated rare earth devices	Lebby; Michael	2012-12-11	9
119	US-20120280276-A1	Preview	PDF	Single Crystal Ge On Si	Dargis; Rytis et al.	2012-11-08	6
120	US-20120256232-A1	Preview	PDF	Multilayer Rare Earth Device	Clark; Andrew et al.	2012-10-11	24
121	US-20120183767-A1	Preview	PDF	HEXAGONAL REO TEMPLATE BUFFER FOR III-N LAYERS ON SILICON	Dargis; Rytis et al.	2012-07-19	10
122	US-20120145243-A1	Preview	PDF	SOLAR CELLS WITH MAGNETICALLY ENHANCED UP-CONVERSION	Williams; David L. et al.	2012-06-14	13
123	US-20120147906-A1	Preview	PDF	LASER COOLING OF MODIFIED SOI WAFER	Williams; David L. et al.	2012-06-14	12
124	US-20120104443-A1	Preview	PDF	IIIOxNy ON SINGLE CRYSTAL SOI SUBSTRATE AND III n GROWTH PLATFORM	Clark; Andrew et al.	2012-05-03	9
125	US-20120104567-A1	Preview	PDF	IIIOxNy ON REO/Si	Clark; Andrew et al.	2012-05-03	6
126	US-20120090672-A1	Preview	PDF	REO-Ge Multi-Junction Solar Cell	LEBBY; MICHAEL S. et al.	2012-04-19	16
127	US-20120085399-A1	Preview	PDF	REO-Ge Multi-Junction Solar Cell	Lebby; Michael S. et al.	2012-04-12	17

Professor (Dr. Dr.) Michael S. Lebby, B. Eng. (Hons), MBA, Ph.D., D. Eng, Fellow NAI, IEEE, Optica (OSA); C. Eng.
1 Hawthorne St., unit 25a, San Francisco, CA 94105, USA; mobile +1 717 839 7078; drmlebby@gmail.com

128	US-20120073648-A1	Preview	PDF	Photovoltaic conversion using rare earths plus Group IV Sensitizers	Clark; Andrew et al.	2012-03-29	18
129	US-20120019902-A1	Preview	PDF	INTERGRATED PUMP LASER AND RARE EARTH WAVEGUIDE AMPLIFIER	Williams; David L. et al.	2012-01-26	10
130	US-20110290313-A1	Preview	PDF	SOLAR CELLS WITH ENGINEERED SPECTRAL CONVERSION	LEBBY; MICHAEL et al.	2011-12-01	19
131	US-8049100-B2	Preview	PDF	Multijunction rare earth solar cell	Clark; Andrew et al.	2011-11-01	24
132	US-8039738-B2	Preview	PDF	Active rare earth tandem solar cell	Clark; Andrew et al.	2011-10-18	25
133	US-8039737-B2	Preview	PDF	Passive rare earth tandem solar cell	Clark; Andrew et al.	2011-10-18	17
134	US-20110220173-A1	Preview	PDF	ACTIVE SOLAR CONCENTRATOR WITH MULTI-JUNCTION DEVICES	LEBBY; MICHAEL	2011-09-15	15
135	US-20110203666-A1	Preview	PDF	HIGH EFFICIENCY SOLAR CELL USING IIIB MATERIAL TRANSITION LAYERS	Lebby; Michael et al.	2011-08-25	10
136	US-20110188533-A1	Preview	PDF	INTEGRATED RARE EARTH DEVICES	LEBBY; MICHAEL	2011-08-04	10
137	US-7968384-B2	Preview	PDF	*Stacked transistors and process*	Atanakovic; Petar B. et al.	2011-06-28	7
138	US-7967653-B2	Preview	PDF	Full color display	Lebby; Michael et al.	2011-06-28	11
139	US-20110108908-A1	Preview	PDF	*MULTILAYERED BOX IN FDSOI MOSFETS*	Lebby; Michael et al.	2011-05-12	34
140	US-7821066-B2	Preview	PDF	*Multilayered BOX in FDSOI MOSFETS*	Lebby; Michael et al.	2010-10-26	33
141	US-20100122720-A1	Preview	PDF	Passive Rare Earth Tandem Solar Cell	Clark; Andrew et al.	2010-05-20	17
142	US-20100116315-A1	Preview	PDF	Active rare earth tandem solar cell	Clark; Andrew et al.	2010-05-13	25
143	US-20100112736-A1	Preview	PDF	FULL COLOR DISPLAY	Lebby; Michael et al.	2010-05-06	12
144	US-20100109047-A1	Preview	PDF	Multijunction rare earth solar cell	Clark; Andrew et al.	2010-05-06	23
145	US-20100084680-A1	Preview	PDF	SPONTANEOUS/STIMULATED LIGHT EMITTING .mu.-CAVITY DEVICE	Lebby; Michael et al.	2010-04-08	8
146	US-7643526-B1	Preview	PDF	Spontaneous/stimulated light emitting .mu.-cavity device	Lebby; Michael et al.	2010-01-05	8

Professor (Dr. Dr.) Michael S. Lebby, B. Eng. (Hons), MBA, Ph.D., D. Eng, Fellow NAI, IEEE, Optica (OSA); C. Eng.
1 Hawthorne St., unit 25a, San Francisco, CA 94105, USA; mobile +1 717 839 7078; drmlebby@gmail.com

147	US-20090291535-A1	Preview	PDF	*STACKED TRANSISTORS AND PROCESS*	Atanackovic; Petar B. et al.	2009-11-26	7
148	US-7605531-B1	Preview	PDF	Full color display including LEDs with rare earth active areas and different radiative transistions	Lebby; Michael et al.	2009-10-20	11
149	US-7579623-B2	Preview	PDF	*Stacked transistors and process*	Atanackovic; Petar B. et al.	2009-08-25	7
150	US-7538016-B2	Preview	PDF	*Signal and/or ground planes with double buried insulator layers and fabrication process*	Atanakovic; Petar B. et al.	2009-05-26	8
151	US-7388230-B1	Preview	PDF	Selective colored light emitting diode	Lebby; Michael et al.	2008-06-17	9
152	US-20080135924-A1	Preview	PDF	*Multilayered box in FDSOI MOSFETS*	Lebby; Michael et al.	2008-06-12	34
153	US-7365357-B2	Preview	PDF	Strain inducing multi-layer cap	Atanackovic; Petar B. et al.	2008-04-29	6
154	US-20080093670-A1	Preview	PDF	*SIGNAL AND/OR GROUND PLANES WITH DOUBLE BURIED INSULATOR LAYERS AND FABRICATION PROCESS*	Atanakovic; Petar B. et al.	2008-04-24	8
155	US-7355269-B1	Preview	PDF	*IC on non-semiconductor substrate*	Lebby; Michael et al.	2008-04-08	4
156	US-7323396-B2	Preview	PDF	*Signal and/or ground planes with double buried insulator layers and fabrication process*	Atanackovic; Petar B. et al.	2008-01-29	7
157	US-20070018166-A1	Preview	PDF	*Stacked transistors and process*	Atanackovic; Petar B. et al.	2007-01-25	8
158	US-20070018203-A1	Preview	PDF	*Strain inducing multi-layer cap*	Atanackovic; Petar B. et al.	2007-01-25	6
159	US-20060246691-A1	Preview	PDF	*Signal and/or ground planes with double buried insulator layers and fabrication process*	Atanackovic; Petar B. et al.	2006-11-02	8
160	US-6999644-B1	Preview	PDF	*Discrete optoelectric package*	Lebby; Michael S. et al.	2006-02-14	17
161	US-6966703-B1	Preview	PDF	*Self eject latch mechanism for an optical transceiver module*	Lebby; Michael S. et al.	2005-11-22	9

Professor (Dr. Dr.) Michael S. Lebby, B. Eng. (Hons), MBA, Ph.D., D. Eng, Fellow NAI, IEEE, Optica (OSA); C. Eng.
1 Hawthorne St., unit 25a, San Francisco, CA 94105, USA; mobile +1 717 839 7078; drmlebby@gmail.com

162	US-6795461-B1	Preview	PDF	*Optoelectric module*	Blair; Thomas H. et al.	2004-09-21	19
163	US-6663296-B1	Preview	PDF	*Optoelectric module*	Blair; Thomas H. et al.	2003-12-16	14
164	US-6412989-B1	Preview	PDF	*Directable laser transmission module*	Hartman; Davis Howard et al.	2002-07-02	8
165	US-6243056-B1	Preview	PDF	*Transceiver with miniature virtual image display*	Jachimowicz; Karen E. et al.	2001-06-05	12
166	US-6228440-B1	Preview	PDF	*Perishable media information storage mechanism and method of fabrication*	Dailey; Conan B. et al.	2001-05-08	7
167	US-6158884-A	Preview	PDF	Integrated communicative watch	Lebby; Michael S. et al.	2000-12-12	9
168	US-6161106-A	Preview	PDF	Perishable media system and method of operation	Dailey; Conan B. et al.	2000-12-12	7
169	US-6156582-A	Preview	PDF	*Method of fabricating top emitting ridge VCSEL with self-aligned contact and sidewall reflector*	Shieh; Chan-Long et al.	2000-12-05	6
170	US-6131017-A	Preview	PDF	*Dual system portable electronic communicator*	Lebby; Michael S. et al.	2000-10-10	8
171	US-6122023-A	Preview	PDF	Non-speckle liquid crystal projection display	Chen; Diana et al.	2000-09-19	8
172	US-6121068-A	Preview	PDF	*Long wavelength light emitting vertical cavity surface emitting laser and method of fabrication*	Ramdani; Jamal et al.	2000-09-19	7
173	US-6115618-A	Preview	PDF	Portable electronic device with removable display	Lebby; Michael S. et al.	2000-09-05	6
174	US-6111839-A	Preview	PDF	Optical pickup head including a coherent first order mode laser light source	Milster; Tom D. et al.	2000-08-29	7
175	US-6096666-A	Preview	PDF	Holographic textile fiber	Jachimowicz; Karen E. et al.	2000-08-01	6

Professor (Dr. Dr.) Michael S. Lebby, B. Eng. (Hons), MBA, Ph.D., D. Eng, Fellow NAI, IEEE, Optica (OSA); C. Eng.
1 Hawthorne St., unit 25a, San Francisco, CA 94105, USA; mobile +1 717 839 7078; drmlebby@gmail.com

176	US-6097748-A	Preview	PDF	*Vertical cavity surface emitting laser semiconductor chip with integrated drivers and photodetectors and method of fabrication*	Huang; Rong-Ting et al.	2000-08-01	11
177	US-6097528-A	Preview	PDF	Microscanner for portable laser diode displays	Lebby; Michael S. et al.	2000-08-01	8
178	US-6091754-A	Preview	PDF	*VCSEL having integrated photodetector for automatic power control*	Jiang; Wenbin et al.	2000-07-18	5
179	US-6084697-A	Preview	PDF	*Integrated electro-optical package*	Lebby; Michael S. et al.	2000-07-04	9
180	US-6080690-A	Preview	PDF	Textile fabric with integrated sensing device and clothing fabricated thereof	Lebby; Michael S. et al.	2000-06-27	8
181	US-6069593-A	Preview	PDF	Display carrier and electronic display control for multiple displays in a portable electronic device	Lebby; Michael S. et al.	2000-05-30	6
182	US-6064780-A	Preview	PDF	*Interconnect substrate with a single contact accessible in an upper and an end surface*	Blair; Thomas H. et al.	2000-05-16	6
183	US-6061380-A	Preview	PDF	*Vertical cavity surface emitting laser with doped active region and method of fabrication*	Jiang; Wenbin et al.	2000-05-09	8
184	US-6061485-A	Preview	PDF	*Method for wavelength division multiplexing utilizing donut mode vertical cavity surface emitting lasers*	Jiang; Wenbin et al.	2000-05-09	7
185	US-6029073-A	Preview	PDF	Display carrier with binocular viewing for a portable electronic device	Lebby; Michael S. et al.	2000-02-22	7
186	US-6026111-A	Preview	PDF	*Vertical cavity surface emitting laser device having an extended cavity*	Jiang; Wenbin et al.	2000-02-15	6
187	US-6022760-A	Preview	PDF	*Integrated electro-optical package and method of fabrication*	Lebby; Michael S. et al.	2000-02-08	12
188	US-6021146-A	Preview	PDF	*Vertical cavity surface emitting laser for high power single mode operation and method of fabrication*	Jiang; Wenbin et al.	2000-02-01	7
189	US-6021147-A	Preview	PDF	*Vertical cavity surface emitting laser for high power single mode operation and method of fabrication*	Jiang; Wenbin et al.	2000-02-01	7

Professor (Dr. Dr.) Michael S. Lebby, B. Eng. (Hons), MBA, Ph.D., D. Eng, Fellow NAI, IEEE, Optica (OSA); C. Eng.
1 Hawthorne St., unit 25a, San Francisco, CA 94105, USA; mobile +1 717 839 7078; drmlebby@gmail.com

190	US-6008067-A	Preview	PDF	*Fabrication of visible wavelength vertical cavity surface emitting laser*	Ramdani; Jamal et al.	1999-12-28	5
191	US-5978398-A	Preview	PDF	*Long wavelength vertical cavity surface emitting laser*	Ramdani; Jamal et al.	1999-11-02	5
192	US-5974071-A	Preview	PDF	*VCSEL with integrated photodetectors for automatic power control and signal detection in data storage*	Jiang; Wenbin et al.	1999-10-26	8
193	US-5966399-A	Preview	PDF	*Vertical cavity surface emitting laser with integrated diffractive lens and method of fabrication*	Jiang; Wenbin et al.	1999-10-12	7
194	US-5959315-A	Preview	PDF	*Semiconductor to optical link*	Lebby; Michael S. et al.	1999-09-28	6
195	US-5956363-A	Preview	PDF	*Long wavelength vertical cavity surface emitting laser with oxidation layers and method of fabrication*	Lebby; Michael S. et al.	1999-09-21	7
196	US-5956364-A	Preview	PDF	*Vertical cavity surface emitting laser with shaped cavity mirror and method of fabrication*	Jiang; Wenbin et al.	1999-09-21	6
197	US-5953355-A	Preview	PDF	*Semiconductor laser package with power monitoring system*	Kiely; Philip et al.	1999-09-14	6
198	US-5946121-A	Preview	PDF	*IrDA data link with VCSEL light source*	Jiang; Wenbin et al.	1999-08-31	4
199	US-5943359-A	Preview	PDF	*Long wavelength VCSEL*	Ramdani; Jamal et al.	1999-08-24	5
200	US-5943357-A	Preview	PDF	*Long wavelength vertical cavity surface emitting laser with photodetector for automatic power control and method of fabrication*	Lebby; Michael S. et al.	1999-08-24	7
201	US-5939773-A	Preview	PDF	*Semiconductor laser package including a lead frame and plastic resin housing*	Jiang; Wenbin et al.	1999-08-17	8
202	US-5936929-A	Preview	PDF	*Optical submodule and method for making*	Jiang; Wenbin et al.	1999-08-10	7
203	US-5923696-A	Preview	PDF	Visible light emitting vertical cavity surface emitting laser with gallium phosphide contact layer and method of fabrication	Ramdani; Jamal et al.	1999-07-13	7
204	US-5914973-A	Preview	PDF	*Vertical cavity surface emitting laser for high power operation and method of fabrication*	Jiang; Wenbin et al.	1999-06-22	7

Professor (Dr. Dr.) Michael S. Lebby, B. Eng. (Hons), MBA, Ph.D., D. Eng, Fellow NAI, IEEE, Optica (OSA); C. Eng.
1 Hawthorne St., unit 25a, San Francisco, CA 94105, USA; mobile +1 717 839 7078; drmlebby@gmail.com

205	US-5906004-A	Preview	PDF	Textile fabric with integrated electrically conductive fibers and clothing fabricated thereof	Lebby; Michael S. et al.	1999-05-25	7
206	US-5905750-A	Preview	PDF	*Semiconductor laser package and method of fabrication*	Lebby; Michael S. et al.	1999-05-18	10
207	US-5903586-A	Preview	PDF	*Long wavelength vertical cavity surface emitting laser*	Ramdani; Jamal et al.	1999-05-11	5
208	US-5898722-A	Preview	PDF	*Dual wavelength monolithically integrated vertical cavity surface emitting lasers and method of fabrication*	Ramdani; Jamal et al.	1999-04-27	8
209	US-5886972-A	Preview	PDF	Recording information in a phase change optical medium with a vertical cavity surface emitting laser	Jiang; Wenbin et al.	1999-03-23	5
210	US-5883912-A	Preview	PDF	*Long wavelength VCSEL*	Ramdani; Jamal et al.	1999-03-16	5
211	US-5881084-A	Preview	PDF	*Semiconductor laser for package with power monitoring system*	Huang; Rong-Ting et al.	1999-03-09	8
212	US-5848086-A	Preview	PDF	*Electrically confined VCSEL*	Lebby; Michael S. et al.	1998-12-08	7
213	US-5838703-A	Preview	PDF	*Semiconductor laser package with power monitoring system and optical element*	Lebby; Michael S. et al.	1998-11-17	9
214	US-5838707-A	Preview	PDF	Ultraviolet/visible light emitting vertical cavity surface emitting laser and method of fabrication	Ramdani; Jamal et al.	1998-11-17	8
215	US-5835521-A	Preview	PDF	*Long wavelength light emitting vertical cavity surface emitting laser and method of fabrication*	Ramdani; Jamal et al.	1998-11-10	7
216	US-5831960-A	Preview	PDF	*Integrated vertical cavity surface emitting laser pair for high density data storage and method of fabrication*	Jiang; Wenbin et al.	1998-11-03	7
217	US-5821571-A	Preview	PDF	*Dual sided integrated electro-optical package*	Lebby; Michael S. et al.	1998-10-13	13
218	US-5818404-A	Preview	PDF	*Integrated electro-optical package*	Lebby; Michael S. et al.	1998-10-06	18
219	US-5815524-A	Preview	PDF	*VCSEL including GaTlP active region*	Ramdani; Jamal et al.	1998-09-29	5
220	US-5796769-A	Preview	PDF	Red light vertical cavity surface emitting laser	Ramdani; Jamal et al.	1998-08-18	6
221	US-5789733-A	Preview	PDF	Smart card with contactless optical interface	Jachimowicz; Karen E. et al.	1998-08-04	7
222	US-5774486-A	Preview	PDF	*Waveguide power monitoring system for vertical cavity surface emitting lasers*	Jiang; Wenbin et al.	1998-06-30	6
223	US-5764671-A	Preview	PDF	*VCSEL with selective oxide transition regions*	Lebby; Michael S. et al.	1998-06-09	10

Professor (Dr. Dr.) Michael S. Lebby, B. Eng. (Hons), MBA, Ph.D., D. Eng, Fellow NAI, IEEE, Optica (OSA); C. Eng.
1 Hawthorne St., unit 25a, San Francisco, CA 94105, USA; mobile +1 717 839 7078; drmlebby@gmail.com

224	US-5757741-A	Preview	PDF	CD ROM head with VCSEL or VCSEL array	Jiang; Wenbin et al.	1998-05-26	11
225	US-5757829-A	Preview	PDF	*Flip chip power monitoring system for vertical cavity surface emitting lasers*	Jiang; Wenbin et al.	1998-05-26	6
226	US-5757836-A	Preview	PDF	*Vertical cavity surface emitting laser with laterally integrated photodetector*	Jiang; Wenbin et al.	1998-05-26	8
227	US-5751757-A	Preview	PDF	*VCSEL with integrated MSM photodetector*	Jiang; Wenbin et al.	1998-05-12	5
228	US-5751471-A	Preview	PDF	*Switchable lens and method of making*	Chen; Diana et al.	1998-05-12	8
229	US-5748665-A	Preview	PDF	*Visible VCSEL with hybrid mirrors*	Jiang; Wenbin et al.	1998-05-05	7
230	US-5748161-A	Preview	PDF	*Integrated electro-optical package with independent menu bar*	Lebby; Michael S. et al.	1998-05-05	22
231	US-5742630-A	Preview	PDF	*VCSEL with integrated pin diode*	Jiang; Wenbin et al.	1998-04-21	6
232	US-5741724-A	Preview	PDF	*Method of growing gallium nitride on a spinel substrate*	Ramdani; Jamal et al.	1998-04-21	5
233	US-5739800-A	Preview	PDF	*Integrated electro-optical package with LED display chip and substrate with drivers and central opening*	Lebby; Michael S. et al.	1998-04-14	19
234	US-5732103-A	Preview	PDF	*Long wavelength VCSEL*	Ramdani; Jamal et al.	1998-03-24	5
235	US-5719892-A	Preview	PDF	*Hybrid mirror structure for a visible emitting VCSEL*	Jiang; Wenbin et al.	1998-02-17	8
236	US-5719893-A	Preview	PDF	*Passivated vertical cavity surface emitting laser*	Jiang; Wenbin et al.	1998-02-17	7
237	US-5710441-A	Preview	PDF	Microcavity LED with photon recycling	Ackley; Donald E. et al.	1998-01-20	5
238	US-5708280-A	Preview	PDF	*Integrated electro-optical package and method of fabrication*	Lebby; Michael S. et al.	1998-01-13	12
239	US-5706306-A	Preview	PDF	*VCSEL with distributed Bragg reflectors for visible light*	Jiang; Wenbin et al.	1998-01-06	6
240	US-5703664-A	Preview	PDF	*Integrated electro-optic package for reflective spatial light modulators*	Jachimowicz; Karen E. et al.	1997-12-30	13
241	US-5699073-A	Preview	PDF	*Integrated electro-optical package with carrier ring and method of fabrication*	Lebby; Michael S. et al.	1997-12-16	19
242	US-5661075-A	Preview	PDF	*Method of making a VCSEL with passivation*	Grodzinski; Piotr et al.	1997-08-26	9

Professor (Dr. Dr.) Michael S. Lebby, B. Eng. (Hons), MBA, Ph.D., D. Eng, Fellow NAI, IEEE, Optica (OSA); C. Eng.
1 Hawthorne St., unit 25a, San Francisco, CA 94105, USA; mobile +1 717 839 7078; drmlebby@gmail.com

243	US-5654228-A	Preview	PDF	*VCSEL having a self-aligned heat sink and method of making*	Shieh; Chan-Long et al.	1997-08-05	7
244	US-5644369-A	Preview	PDF	*Switchable lens/diffuser*	Jachimowicz; Karen E. et al.	1997-07-01	8
245	US-5638392-A	Preview	PDF	Short wavelength VCSEL	Ramdani; Jamal et al.	1997-06-10	6
246	US-5636298-A	Preview	PDF	*Coalescing optical module and method for making*	Jiang; Wenbin et al.	1997-06-03	8
247	US-5633886-A	Preview	PDF	*Short wavelength VCSEL with Al-free active region*	Ramdani; Jamal et al.	1997-05-27	6
248	US-5625734-A	Preview	PDF	*Optoelectronic interconnect device and method of making*	Thomas; Ronald E. et al.	1997-04-29	7
249	US-5574744-A	Preview	PDF	*Optical coupler*	Gaw; Craig A. et al.	1996-11-12	7
250	US-5563900-A	Preview	PDF	Broad spectrum surface-emitting led	Ackley; Donald E. et al.	1996-10-08	7
251	US-5557626-A	Preview	PDF	*Patterned mirror VCSEL with adjustable selective etch region*	Grodzinski; Piotr et al.	1996-09-17	8
252	US-5555341-A	Preview	PDF	*Waveguide with an electrically conductive channel*	Sharma; Ravinder K. et al.	1996-09-10	7
253	US-5550941-A	Preview	PDF	*Optoelectronic interface module*	Lebby; Michael S. et al.	1996-08-27	8
254	US-5545359-A	Preview	PDF	*Method of making a plastic molded optoelectronic interface*	Ackley; Donald E. et al.	1996-08-13	9
255	US-5546413-A	Preview	PDF	*Integrated light emitting device*	Lebby; Michael S. et al.	1996-08-13	10
256	US-5543958-A	Preview	PDF	*Integrated electro-optic package for reflective spatial light modulators*	Lebby; Michael S. et al.	1996-08-06	14
257	US-5540799-A	Preview	PDF	*Method of fabricating optical waveguide from a laminate*	Lebby; Michael S. et al.	1996-07-30	6
258	US-5538919-A	Preview	PDF	*Method of fabricating a semiconductor device with high heat conductivity*	Lebby; Michael S. et al.	1996-07-23	8
259	US-5539200-A	Preview	PDF	*Integrated optoelectronic substrate*	Lebby; Michael S. et al.	1996-07-23	6
260	US-5539554-A	Preview	PDF	*Integrated electro-optic package for reflective spatial light*	Lebby; Michael S. et al.	1996-07-23	14
261	US-5534888-A	Preview	PDF	Electronic book	Lebby; Michael S. et al.	1996-07-09	8

Professor (Dr. Dr.) Michael S. Lebby, B. Eng. (Hons), MBA, Ph.D., D. Eng, Fellow NAI, IEEE, Optica (OSA); C. Eng.
1 Hawthorne St., unit 25a, San Francisco, CA 94105, USA; mobile +1 717 839 7078; drmlebby@gmail.com

262	US-5530715-A	Preview	PDF	*Vertical cavity surface emitting laser having continuous grading*	Shieh; Chan-Long et al.	1996-06-25	7
263	US-5521992-A	Preview	PDF	*Molded optical interconnect*	Chun; Christopher K. Y. et al.	1996-05-28	10
264	US-5517348-A	Preview	PDF	*Voltage controlled transparent layer for a bi-directinal device*	Lebby; Michael S.	1996-05-14	5
265	US-5511138-A	Preview	PDF	*Interlocking waveguide and method of making*	Lebby; Michael S. et al.	1996-04-23	8
266	US-5498883-A	Preview	PDF	*Superluminescent edge emitting device with apparent vertical light emission and method of making*	Lebby; Michael S. et al.	1996-03-12	7
267	US-5493437-A	Preview	PDF	*External communication link for a credit card pager*	Lebby; Michael S. et al.	1996-02-20	10
268	US-5491491-A	Preview	PDF	*Portable electronic equipment with binocular virtual display*	Lebby; Michael S. et al.	1996-02-13	11
269	US-5486946-A	Preview	PDF	*Integrated electro-optic package for reflective spatial light modulators*	Jachimowicz; Karen E. et al.	1996-01-23	14
270	US-5485318-A	Preview	PDF	*Dual image manifestation apparatus with integrated electro-optical package*	Lebby; Michael S. et al.	1996-01-16	17
271	US-5482658-A	Preview	PDF	*Method of making an optoelectronic interface module*	Lebby; Michael S. et al.	1996-01-09	8
272	US-5482891-A	Preview	PDF	*VCSEL with an intergrated heat sink and method of making*	Shieh; Chan-Long et al.	1996-01-09	6
273	US-5478774-A	Preview	PDF	*Method of fabricating patterned-mirror VCSELs using selective growth*	Ackley; Donald E. et al.	1995-12-26	7
274	US-5473716-A	Preview	PDF	*Fiber bundle interconnect and method of making same*	Lebby; Michael S. et al.	1995-12-05	8
275	US-5468656-A	Preview	PDF	*Method of making a VCSEL*	Shieh; Chan-Long et al.	1995-11-21	9
276	US-5469185-A	Preview	PDF	Remote sensory unit and driver	Lebby; Michael S. et al.	1995-11-21	7
277	US-5468582-A	Preview	PDF	*Fused optical layer and method of making*	Blair; Thomas H. et al.	1995-11-21	7
278	US-5466633-A	Preview	PDF	*Optical reading head and method for making same*	Ackley; Donald E. et al.	1995-11-14	11
279	US-5467215-A	Preview	PDF	*Integrated electro-optic package for reflective spatial light modulators*	Lebby; Michael S. et al.	1995-11-14	13
280	US-5452387-A	Preview	PDF	*Coaxial optoelectronic mount and method of making same*	Chun; Christopher K. Y. et al.	1995-09-19	5

Professor (Dr. Dr.) Michael S. Lebby, B. Eng. (Hons), MBA, Ph.D., D. Eng, Fellow NAI, IEEE, Optica (OSA); C. Eng.
1 Hawthorne St., unit 25a, San Francisco, CA 94105, USA; mobile +1 717 839 7078; drmlebby@gmail.com

281	US-5446752-A	Preview	PDF	*VCSEL with current blocking layer offset*	Ackley; Donald E. et al.	1995-08-29	10
282	US-5437092-A	Preview	PDF	*Method of making contact areas on an optical waveguide*	Hartman; Davis H. et al.	1995-08-01	7
283	US-5432809-A	Preview	PDF	*VCSEL with Al-free cavity region*	Grodzinski; Piotr et al.	1995-07-11	7
284	US-5432630-A	Preview	PDF	*Optical bus with optical transceiver modules and method of manufacture*	Lebby; Michael S. et al.	1995-07-11	16
285	US-5428704-A	Preview	PDF	*Optoelectronic interface and method of making*	Lebby; Michael S. et al.	1995-06-27	16
286	US-5422901-A	Preview	PDF	*Semiconductor device with high heat conductivity*	Lebby; Michael S. et al.	1995-06-06	7
287	US-5416870-A	Preview	PDF	*Optoelectronic interface device and method with reflective surface*	Chun; Christopher K. Y. et al.	1995-05-16	8
288	US-5408547-A	Preview	PDF	Optical read/write head	Lebby; Michael S. et al.	1995-04-18	10
289	US-5400423-A	Preview	PDF	*Molded star coupler and method of making same*	Chun; Christopher K. Y. et al.	1995-03-21	5
290	US-5400352-A	Preview	PDF	*Semiconductor laser and method therefor*	Lebby; Michael S. et al.	1995-03-21	5
291	US-5389312-A	Preview	PDF	*Method of fabricating molded optical waveguides*	Lebby; Michael S. et al.	1995-02-14	8
292	US-5390275-A	Preview	PDF	*Molded waveguide and method for making same*	Lebby; Michael S. et al.	1995-02-14	9
293	US-5388120-A	Preview	PDF	*VCSEL with unstable resonator*	Ackley; Donald E. et al.	1995-02-07	5
294	US-5369529-A	Preview	PDF	*Reflective optoelectronic interface device and method of making*	Kuo; Shun-Meen et al.	1994-11-29	7
295	US-5369415-A	Preview	PDF	Direct retinal scan display with planar imager	Richard; Fred V. et al.	1994-11-29	6
296	US-5367593-A	Preview	PDF	Optical/electrical connector and method of fabrication	Lebby; Michael S. et al.	1994-11-22	10
297	US-5361317-A	Preview	PDF	Assembly with fixture aligning and affixing an optical fiber to an optical device	Hartman; Davis H. et al.	1994-11-01	7
298	US-5359686-A	Preview	PDF	Interface for coupling optical fibers to electronic circuitry	Galloway; David et al.	1994-10-25	17
299	US-5358880-A	Preview	PDF	Method of manufacturing closed cavity LED	Lebby; Michael S. et al.	1994-10-25	6

Professor (Dr. Dr.) Michael S. Lebby, B. Eng. (Hons), MBA, Ph.D., D. Eng, Fellow NAI, IEEE, Optica (OSA); C. Eng.
1 Hawthorne St., unit 25a, San Francisco, CA 94105, USA; mobile +1 717 839 7078; drmlebby@gmail.com

300	US-5359618-A	Preview	PDF	High efficiency VCSEL and method of fabrication	Lebby; Michael S. et al.	1994-10-25	6
301	US-5359669-A	Preview	PDF	Remote retinal scan identifier	Shanley; Charles W. et al.	1994-10-25	7
302	US-5351257-A	Preview	PDF	*VCSEL with vertical offset operating region providing a lateral waveguide and current limiting and method of fabrication*	Lebby; Michael S. et al.	1994-09-27	10
303	US-5351331-A	Preview	PDF	*Method and apparatus for splicing optical fibers with signal I/O*	Chun; Christopher K. Y. et al.	1994-09-27	11
304	US-5349210-A	Preview	PDF	Optical reading head with angled array	Ackley; Donald E. et al.	1994-09-20	10
305	US-5348616-A	Preview	PDF	*Method for patterning a mold*	Hartman; Davis H. et al.	1994-09-20	12
306	US-5345524-A	Preview	PDF	*Optoelectronic transceiver sub-module and method for making*	Lebby; Michael S. et al.	1994-09-06	9
307	US-5345527-A	Preview	PDF	*Intelligent opto-bus with display*	Lebby; Michael S. et al.	1994-09-06	11
308	US-5345530-A	Preview	PDF	*Molded waveguide and method for making same*	Lebby; Michael S. et al.	1994-09-06	8
309	US-5337391-A	Preview	PDF	*Optoelectronic sub-module and method of making same*	Lebby; Michael S.	1994-08-09	10
310	US-5337397-A	Preview	PDF	*Optical coupling device and method for making*	Lebby; Michael S. et al.	1994-08-09	7
311	US-5335300-A	Preview	PDF	*Method of manufacturing I/O node in an optical channel waveguide and apparatus for utilizing*	Hartman; Davis H. et al.	1994-08-02	10
312	US-5325451-A	Preview	PDF	*Modular optical waveguide and method for making*	Hartman; Davis et al.	1994-06-28	5
313	US-5324964-A	Preview	PDF	*Superluminescent surface light emitting device*	Ackley; Donald E. et al.	1994-06-28	5
314	US-5323477-A	Preview	PDF	Contact array imager with integral waveguide and electronics	Lebby; Michael S. et al.	1994-06-21	10
315	US-5313545-A	Preview	PDF	*Molded waveguide with a unitary cladding region and method of making*	Kuo; Shun-Meen et al.	1994-05-17	11
316	US-5309537-A	Preview	PDF	*Optoelectronic coupling device and method of making*	Chun; Christopher K. Y. et al.	1994-05-03	11
317	US-5286982-A	Preview	PDF	*High contrast ratio optical modulator*	Ackley; Donald E. et al.	1994-02-15	7
318	US-5282071-A	Preview	PDF	*Contact areas on an optical waveguide and method of making*	Hartman; Davis H. et al.	1994-01-25	8
319	US-5276762-A	Preview	PDF	*Magnetic holding methods for optical fiber I/O assembly*	Hartman; Davis H. et al.	1994-01-04	4
320	US-5276754-A	Preview	PDF	*Optoelectronic mount and method for making*	Blair; Thomas H. et al.	1994-01-04	7

Professor (Dr. Dr.) Michael S. Lebby, B. Eng. (Hons), MBA, Ph.D., D. Eng, Fellow NAI, IEEE, Optica (OSA); C. Eng.
1 Hawthorne St., unit 25a, San Francisco, CA 94105, USA; mobile +1 717 839 7078; drmlebby@gmail.com

321	US-5271083-A	Preview	PDF	*Molded optical waveguide with contacts utilizing leadframes and method of making same*	Lebby; Michael S. et al.	1993-12-14	10
322	US-5265184-A	Preview	PDF	*Molded waveguide and method for making same*	Lebby; Michael S. et al.	1993-11-23	8
323	US-5249245-A	Preview	PDF	*Optoelectroinc mount including flexible substrate and method for making same*	Lebby; Michael S. et al.	1993-09-28	10
324	US-5230030-A	Preview	PDF	*Interface coupling electronic circuitry*	Hartman; Davis H. et al.	1993-07-20	6
325	US-5228101-A	Preview	PDF	*Electrical to optical links using metalization*	Lebby; Michael S. et al.	1993-07-13	6
326	US-5225816-A	Preview	PDF	*Electrical connector with display*	Lebby; Michael S. et al.	1993-07-06	4
327	US-5218465-A	Preview	PDF	*Intelligent interconnects for broadband optical networking*	Lebby; Michael S. et al.	1993-06-08	6
328	US-5172384-A	Preview	PDF	*Low threshold current laser*	Goronkin; Herbert et al.	1992-12-15	14
329	US-5170448-A	Preview	PDF	*Optical waveguide apparatus and method for partially collecting light*	Ackley; Donald E. et al.	1992-12-08	7
330	US-5125054-A	Preview	PDF	*Laminated polymer optical waveguide interface and method of making same*	Ackley; Donald E. et al.	1992-06-23	6
331	US-5116461-A	Preview	PDF	*Method for fabricating an angled diffraction grating*	Lebby; Michael S. et al.	1992-05-26	5
332	US-5067829-A	Preview	PDF	*Dynamic optical beam steering*	Jaskie; James E. et al.	1991-11-26	7
333	US-5068007-A	Preview	PDF	*Etching of materials in a noncorrosive environment*	Rogers; Stephen P. et al.	1991-11-26	6
334	US-5045908-A	Preview	PDF	*Vertically and laterally illuminated p-i-n photodiode*	Lebby; Michael S.	1991-09-03	5
335	US-5034092-A	Preview	PDF	*Plasma etching of semiconductor substrates*	Lebby; Michael S. et al.	1991-07-23	5

Professor (Dr. Dr.) Michael S. Lebby, B. Eng. (Hons), MBA, Ph.D., D. Eng, Fellow NAI, IEEE, Optica (OSA); C. Eng.
1 Hawthorne St., unit 25a, San Francisco, CA 94105, USA; mobile +1 717 839 7078; drmlebby@gmail.com

PUBLICATIONS (Papers)

1. As of 19th February 2024; Journal of Lightwave Technology, JLT-33420-2023.R1, "Ring-Assisted Mach-Zehnder Modulator on the InP Membrane on Silicon Platform," has been accepted for publication in the next available issue of the IEEE/OPTICA PUBLISHING GROUP Journal of Lightwave Technology. Kashi, A.A., Tol van der, J.J.G.M., Lebby, M.S., Zhang, X., Williams, K., Jiao, Y., "Ring-Assisted Mach-Zehnder Modulator on the InP Membrane on Silicon Platform," Journal of Lightwave Technology.
2. C. Eschenbaum, A. Mertens, C. Fullner, A. Kuzmin, A. Schwarzenberger, A. Kotz, G. Ramann, M. Chen, J. Drisko, B. Johnson, J. Zyskind, J. Marcelli, M. Lebby, W. Freude, S. Randel, C. Koos, "Thermally Stable Silicon-Organic Hybrid (SOH) Mach-Zehnder Modulator for 140 GBd PAM4 transmission with Sub-1V Drive Signals" ECOC Post Deadline session 1; 13:42 to 13:54pm, 22nd September 2022; "Thermally Stable Silicon-Organic Hybrid (SOH) Mach-Zehnder Modulator for 140 GBd PAM4 Transmission With Sub-1 v Drive Signals (Th3B.2) given by Carsten Eschenbaum, *Karlsruhe Inst Tech (KIT)* and SilOriX Gmbh.
3. Amir Abbas Kashi; Jos J. G. M. Van der Tol; Kevin A. Williams; Weiming Yao; Michael S. Lebby; Cory Pecinovsky; and Yuqing Jiao' "**Electro-Optic Slot Waveguide Phase Modulator on the InP Membrane on Silicon Platform**" IEEE Journal of Quantum Electronics, Year: 2021 | Volume: 57, Issue: 1, pages 1-10.
4. Ristic, S.; Tolstikhin, V.; Pimenov, K.; Watson, C.;Florjanczyk, M.; and **Lebby, M**.; "100Gb/s Multi-Guide Vertical Integration Transmitter PIC in InP for Fiber-Optics Interconnects," Poster paper P2.20, ECOC 22-27th Sept, 2013, London, UK http://www.ecoc2013.org/sc2.html.
5. Dargis, R.; Williams, D.; Smith, R.; Arkun, E.; Semans, S; Vosters, G.; **Lebby, M**.; and Clark, A., "Study of the Structural and Thermal Properties of Single Crystalline Epitaxial Rare-Earth-Metal Oxide Layers Grown on Si," (2011); ECS Transactions **doi: 10.1149/1.3633032,** ECS Trans. **2011** volume 41, issue 3, **161-167** http://www.ecsdl.org/getabs/servlet/GetabsServlet?prog=normal&id=ECSTF8000041000003000161000001&idtype=cvips&gifs=yes&ref=no.
6. Dargis, Rytis; Arkun, E. ; Clark, Andrew ; Roucka, R. ; Smith, Robin ; Williams, David ; **Lebby, Michael** ; Demkov, Alexander A. "Rare-earth-metal oxide buffer for epitaxial growth of single crystal GeSi and Ge on Si(111)," Journal of Vacuum Science & Technology Volume:30 Issue:2
7. Dargis. R, Clark. A, Arkun. F.E, Smith. R, **Lebby. M**, "Engineering of the Interface between Silicon and Rare-Earth Oxide Buffer for GaN Growth," ECS Meeting, 27 October, 2013, San Francisco, USA. Doi: 10.1063/1.4753828.
8. Roucka. R, Clark. A, Semans. S, Tolle. J, **Lebby. M,** "Scalable virtual Ge templates for III-V integration on Si wafers," 8th International conference on concentrating photovoltaic systems: CPV8, 16-18th April 2012, Toledo, Spain.
9. R. Dargis, A. Clark, E. Arkun, R. Roucka, R. Smith, A.A. Demkov, **M. Lebby,** "Growth and application of epitaxial heterostructures with polymorphous rare-earth oxides," Journal of Crystal Growth, Volume 378, 1 September 2013, Pages 177–179.

Professor (Dr. Dr.) Michael S. Lebby, B. Eng. (Hons), MBA, Ph.D., D. Eng, Fellow NAI, IEEE, Optica (OSA); C. Eng.
1 Hawthorne St., unit 25a, San Francisco, CA 94105, USA; mobile +1 717 839 7078; drmlebby@gmail.com

10. Rytis Dargis*, Erdem F. Arkun, Radek Roucka, Robin Smith, David Williams, Andrew Clark, **Michael Lebby**, "Epitaxial Si, SiGe and Ge on binary and ternary rare earth oxide buffers;" physica status solidi (c). Special Issue: E-MRS 2012 Spring Meeting – Symposium A, see further papers in Phys. Status Solidi A 209, No. 10 (2012). Volume 9, Issue 10-11, pages 2031–2035, October 2012.
11. F. Erdem Arkuna, **Michael Lebby**b, Rytis Dargisb, Radek Rouckab, Robin S. Smithb and
    Andrew Clarkb "Scalable GaN-on-Silicon Using Rare Earth Oxide Buffer Layers," doi: 10.1149/05009.1065ecst *ECS Trans.* 2013 volume 50, issue 9, 1065-1071 [Electrochemical Society].
12. R. Dargisz, A. Clark, E. Arkun, R. Roucka, D. Williams, R. Smith and **M. Lebby** "Epitaxial Si and Gd_2O_3 Heterostructures: Distributed Bragg Reflectors with Stress Management Function for GaN on Si Light Emitting Devices,"; doi: 10.1149/2.004206jss *ECS J. Solid State Sci. Technol.* 2012 volume 1, issue 5, P246-P249.
13. R. Dargisz, D. Williams, R. Smith, E. Arkun, R. Roucka, A. Clark and **M. Lebby** "Structural and Thermal Properties of Single Crystalline Epitaxial Gd_2O_3 and Er_2O_3 Grown on Si(111),"; 10.1149/2.005202jss *ECS J. Solid State Sci. Technol.* 2012 volume 1, issue 2, N24-N28
14. F. Erdem Arkun*, Rytis Dargis, Robin Smith, David Williams, Andrew Clark, **Michael Lebby** "Integrated high reflectivity silicon substrates for GaN LEDs," physica status solidi (c) Volume 9, Issue 3-4, pages 814–817, March 2012.
15. Rytis Dargisa, Andrew Clarka, Erdem Arkuna, Radek Rouckaa, David Williamsa, Robin S. Smitha and **Michael Lebby**a ,"Epitaxial Si and Gd_2O_3 Heterostructures - Distributed Bragg Reflectors with Stress Management Function for GaN on Si Light Emitting Devices,"; doi: 10.1149/05004.0047ecst *ECS Trans.* 2013 volume 50, issue 4, 47-52.
16. Rytis Dargisa, David Williamsa, Robin Smitha, Erdem Arkuna, Scott Semansa, Gary Vostersa**,** **Michael Lebby**a and Andrew Clarka, "Study of the Structural and Thermal Properties of Single Crystalline Epitaxial Rare-Earth-Metal Oxide Layers Grown on Si(111),"; doi: 10.1149/1.3633032 *ECS Trans.* 2011 volume 41, issue 3, 161-167.
17. Williams, D.; Clark, A.; Arkun, E.; Jamora, A.; Vosters, G.; **Lebby, M**., "Silicon light emitting device based on rare earth oxide superlattice," 2010 7th IEEE International Conference on Group IV Photonics, Beijing, Sept. 2010.
18. **Lebby, M**., "Photonic integration: what is the Holy Grail?" Compound Semiconductor , vol.15 , no.7 , pp.25-32, Oct. 2009, http://www.compoundsemiconductor.net/csc/magazine.php?mon=1&year=2009.
19. **Lebby, M.S**., "Green photonics technology and markets," Electronics Letters, vol. 45 , no. 20, pp.1007, Sept. 2009. DOI: 10.1049/el.2009.2563, Print ISSN 0013-5194, Online ISSN 1350-911X.
20. Yang, A.; **Lebby, M**.; Varsa, E., "Photonics Industry-University Collaborations (PICs) Final Technical Rept. 22 Apr-30 Jul 2008, Optoelectronics Industry Development Association, June 2009.

Professor (Dr. Dr.) Michael S. Lebby, B. Eng. (Hons), MBA, Ph.D., D. Eng, Fellow NAI, IEEE, Optica (OSA); C. Eng.
1 Hawthorne St., unit 25a, San Francisco, CA 94105, USA; mobile +1 717 839 7078; drmlebby@gmail.com

21. **Lebby, M.S**., "Testimony before the US-China Economic and Security Review Commission on the optoelectronics industry", 24th March, 2009 (http://www.oida.org/news/oida-news/2009/381)
22. **Lebby, M**.; Clayton, R., "Growing at light speed [Optoelectronics]," Circuits Assembly, vol. 18, no. 9, pp. 44-5, Sept. 2007.
23. Huff, D.B.; **Lebby, M.S**., "Fiber optic sensing technology: emerging markets and trends," Proceedings of the SPIE - The International Society for Optical Engineering, vol. 6619, pp. 661902 (7 pp.), July 2007.
24. **Lebby, M.S**. and Clayton, R, Optoelectronics Roadmap OIDA-iNEMI, IEEE Packaging and Assembly, May 2007.
25. **Lebby, Michael**, "A new model for the optoelectronic indium-based semiconductor industry," Optics and Photonics News, May 2006.
26. **Lebby, M**., "Optical components and their role in optical networks," 2001 Proceedings. 51st Electronic Components and Technology Conference, 2001.
27. **Lebby, M**., "OEICs: commercialization at last," Compound Semiconductor, vol. 7, no. 6, pp. 81-2, 85, July 2001.
28. **M. S. Lebby** & W. B. Jiang. "Packaging of Optical Components and Systems," Wiley Encyclopedia of Electrical and Electronics Engineering, Vol 15 pp 499-516. John G. Webster (Ed.), John Wiley & Sons, New Jersey, 1999.
29. W. B. Jiang, & **M. S. Lebby**, "Optical Sources: Light-emitting diodes and laser technology," Handbook of fiber optic data communication, C. DeCusatis, et al, (Ed.), Academic Press, 1998.
30. W. B. Jiang, & **M. S. Lebby**, "Semiconductor laser and light emitting diode fabrication," Handbook of fiber optic data communication, C. DeCusatis, et al, (Ed.), Academic Press, 1998.
31. Berry, G.; Summers, H.D.; Blood, P.; Claisse, P.; **Lebby, M**., "Optical bistability in vertical cavity surface emitting lasers with a simple intra-cavity epitaxial absorber layer," Conference Digest. ISLC 1998 NARA. 1998 IEEE 16th International Semiconductor Laser Conference, 1998.
32. Jiang, W.; Norton, L.; Kiely, P.; Schwartz, D.; Gable, B.; **Lebby, M**.; Raskin, G., "Vertical cavity surface emitting laser-based parallel optical data link," Optical Engineering, vol. 37, no. 12, pp. 3113-18, Dec. 1998.
33. Robertsson, M.E.; Hagel, O.J.; Gustafsson, G.; Dabek, A.; Popall, M.; Cergel, L.; Wennekers, P.; Kiely, P.; **Lebby, M.**; Lindahl, T., "O/e-MCM packaging with new, patternable dielectric and optical materials," 1998 Proceedings. 48th Electronic Components and Technology Conference, pp. 1413-21, May 1998.
34. Popall, M.; Dabek, A.; Robertsson, M.E.; Gustafsson, G.; Hagel, O.-J.; Olsowski, B.; Buestrich, R.; Cergel, L.; **Lebby, M**.; Kiely, P.; Joly, J.; Lambert, D.; Schaub, M.; Reichl, H., "ORMOCERsTM-new photo-patternable dielectric and optical materials for MCM-packaging," 1998 Proceedings. 48th Electronic Components and Technology Conference, May 1998.
35. Claisse, P.R.; Jiang, W.; Kiely, P.A.; Roll, M.; Boughter, L.; Sanchez, P.; Cotney, D.; **Lebby, M**.; Webb, B.; Lawrence, B., "Automatic power control of a VCSEL using an

Professor (Dr. Dr.) Michael S. Lebby, B. Eng. (Hons), MBA, Ph.D., D. Eng, Fellow NAI, IEEE, Optica (OSA); C. Eng.
1 Hawthorne St., unit 25a, San Francisco, CA 94105, USA; mobile +1 717 839 7078; drmlebby@gmail.com

angled lid TO56 package," 1998 Proceedings. 48th Electronic Components and Technology Conference, May 1998.

36. **Lebby, M. S**., "VCSEL Devices and Packaging for Fiber Optic Transceivers," Integrated Photonics Research, paper MD1, March 30th, 1998.
37. **Lebby, M.S**.; Claisse, P.; Jiang, W.; Kiley, P.; Roll, M.; Boughter, L.; Sanchez, P.; Lawrence, B., "VCSEL devices and packaging," Proceedings of the SPIE - The International Society for Optical Engineering, vol. 3289, pp.2-12, Jan. 1998.
38. Popall, M.; Dabek, A.; Robertsson, M.E.; Gustafsson, G.; Hagel, O.-J.; Olsowski, B.; Buestrich, R.; Cergel, L.; **Lebby, M**.; Kiely, P.; Joly, J.; Lambert, D.; Schaub, M.; Reichl, H., "ORMOCERs - new photo-patternable dielectric and optical materials for MCM-packaging," Proceedings of the 1998 48th Electronic Components & Technology Conference, Jan. 1998.
39. **Lebby, M**., "Optoelectronic Devices and Packaging Technology," 4th IEEE Workshop on AST Phoenix Research Center, IEEE, Jan 1998.
40. Jiang, W.; Claisse, P.; Gaw, C.; Kiely, P.; Lawrence, B.; **Lebby, M**.; Roll, M., "Vertical cavity surface emitting laser packaging with auto power control," 1997 Proceedings. 47th Electronic Components and Technology Conference, pp. 368-70, May 1997.
41. Gaw, C.A.; Jiang, W.; **Lebby, M**.; Kiely, P.A.; Claisse, P.R., "Characteristics of VCSELs and VCSEL arrays for optical data links," Proceedings of the SPIE - The International Society for Optical Engineering, vol. 3004, pp. 122-33, Feb. 1997.
42. Raskin, G.; **Lebby, M.S**.; Carney, F.; Kazakia, M.; Schwartz, D.B.; Gaw, C.A., "Parallel interconnect for a novel system approach to short distance high information transfer data links," Proceedings of the SPIE - The International Society for Optical Engineering, vol. 3038, pp. 165-74, Feb. 1997.
43. Jiang, W.; Gaw, C.; Kiely, P.; Lawrence, B.; **Lebby, M**.; Claisse, P.R., "Effect of proton implantation on the degradation of GaAs/AlGaAs vertical cavity surface emitting lasers," Electronics Letters, vol. 33, no.2, pp. 137-9, Jan. 1997.
44. Jiang, W.; Gaw, C.; Kiely, P.; Lawrence, B.; **Lebby, M**.; Ramdani, J.; Claisse, P., "Relative intensity noise of 780 nm vertical cavity surface emitting lasers," Proceedings of the 1997 Pacific Rim Conference on Lasers and Electro-Optics, CLEO/Pacific Rim, No. 46984, Jan. 1997.
45. Schwartz, D.B.; Chun, C.K.Y.; Foley, B.M.; Hartman, D.H.; **Lebby, M**.; Lee, H.C.; Chan Long Shieh; Kuo, S.M.; Shook, S.G.; Webb, B., "A low-cost high-performance optical interconnect," (1996), http://ieeexplore.ieee.org/xpl/freeabs_all.jsp?arnumber=533892.
46. **Lebby, M**.; Gaw, C.A.; Jiang, W.; Kiely, P.A.; Claisse, P.R.; Grula, J., "Key challenges and results of VCSELs in data links," Conference Proceedings. LEOS '96 9th Annual Meeting. IEEE Lasers and Electro-Optics Society 1996 Annual Meeting, pp. 167-8, vol. 2, Nov. 1996.
47. Schwartz, D.B.; Carney, F.; Chun, C.K.Y.; Claisse, P.; Foley, B.M.; Gaw, C.; Hartman, D.H.; Kiely, P.; Knapp, J.; Wenbin Jiang; Shun Meen Kuo; **Lebby, M**.; Planer, S.; Norton, L.J.; Raskin, G.; Sauvageau, J.; Chan Long Shieh; Shook, S.G.; Tapp, S., "Low-cost high-performance optical interconnect," CLEO '96. Summaries of Papers Presented

Professor (Dr. Dr.) Michael S. Lebby, B. Eng. (Hons), MBA, Ph.D., D. Eng, Fellow NAI, IEEE, Optica (OSA); C. Eng.
1 Hawthorne St., unit 25a, San Francisco, CA 94105, USA; mobile +1 717 839 7078; drmlebby@gmail.com

at the Conference on Lasers and Electro-Optics., vol. 9. 1996 Technical Digest Series. Conference Edition, June 1996.

48. **Lebby, M**.; Gaw, C.A.; Jiang, W.; Kiely, P.A.; Chan Long Shieh; Claisse, P.R.; Ramdani, J.; Hartman, D.H.; Schwartz, D.B.; Grula, J., "Characteristics of VCSEL arrays for parallel optical interconnects," 1996 Proceedings. 46th Electronic Components and Technology Conference, pp. 279-91, May 1996.
49. **Lebby, M**., "Characteristics of VCSEL Parallel Optical Interconnecters,", IEEE, May 1996.
50. **Lebby, M**.; Gaw, C.A.; Jiang, W.; Kiely, P.A.; Chan Long Shieh; Claisse, P.R.; Ramdani, J.; Hartman, D.H.; Schwartz, D.B.; Grula, J., "Use of VCSEL arrays for parallel optical interconnects," Proceedings of the SPIE - The International Society for Optical Engineering, vol. 2683, pp. 81-91, Feb. 1996.
51. **Lebby, M**.; Gaw, C.A.; Jiang, W.; Kiely, P.A.; Shieh, C.L.; Claisse, P.R.; Ramdani, J.; Hartman, D.H.; Schwartz, D.B.; Chun, C.K.Y.; Foley, B.M., "Parallel optical interconnects using VCSELs," Proceedings. IEEE/Cornell Conference on Advanced Concepts in High Speed Semiconductor Devices and Circuits, pp. 348-56, Aug. 1995.
52. Schwartz, D.B.; Chun, C.K.Y.; Foley, B.M.; Hartman, D.H.; **Lebby, M**.; Lee, H.C.; Chan Long Shieh; Shun Meen Kuo; Shook, S.G.; Webb, B., "A low cost, high performance optical interconnect," (May 1995), http://ieeexplore.ieee.org/xpl/freeabs_all.jsp?arnumber=514410.
53. Kiely, P.A.; Taylor, G.W.; Izabelle, A.; **Lebby, M.S**.; Tell, B.; Brown-Goebeler, K.F.; Chang, T.-Y., "An n-channel BICFET in the InGaAs/InAlGaAs/InAlAs material system," IEEE Electron Device Letters, vol. 10, no. 7, pp. 304-6, July 1989.
54. **Lebby, M.S**.; Kiely, P.A.; Taylor, G.W., "Reactive ion etching (RIE) and magnetron ion etching (MIE) combinations for opto-electronic integrated circuit (OEIC) processing," Proceedings of the SPIE - The International Society for Optical Engineering, vol. 1037, pp.88-96, Nov. 1988.
55. Taylor, G.W.; Crawford, D.L.; Kiely, P.A.; Cooke, P.; Sargood, S.; Izabelle, A.; Chang, T.Y.; Tell, B.; **Lebby, M.S**.; Brown-Goebeler, K.; Simmons, J.G., "An inversion channel technology for opto-electronic integration," Proceedings of the SPIE - The International Society for Optical Engineering, vol. 994 , pp. 251-7, 1989.
56. Taylor, G.W.; Kiely, P.A.; Izabelle, A.; Crawford, D.L.; **Lebby, M.S**.; Chang, T.-Y.; Tell, B.; Goebeler, K.B.; Simmons, J.G., "An n-channel BICFET in the GaAs/AlGaAs material system," IEEE Electron Device Letters, vol. 10, no. 2, pp. 88-90, Feb. 1989.
57. G. W. Taylor, **M. S. Lebby**, T. Y. Chang, R. P. Gnall, N. Sauer, B. Tell, and J. G. Simmons, " Very High Transconductance HFET", *IEEE International Electron Devices Conference and Proceedings*, LA, Dec 1988.
58. Crawford, D.L.; Taylor, G.W.; Kiely, P.A.; Cooke, P.; Izabelle, A.; Chang, T.Y.; Tell, B.; **Lebby, M.S**.; Brown-Goebeler, K.; Simmons, J.G., "An inversion channel technology for opto-electronic integration," Fourteenth European Conference on Optical Communication, No. 292, vol. 1, pp. 211-14, Sept. 1988.
59. Taylor, G.W.; **Lebby, M.S**.; Kiely, P.A.; Cooke, P.; Isabelle, A.; Chang, T.Y.; Tell, B.; Crawford, D.L.; Brown-Goebeler, K.; Simmons, J.G., "Performance and advantages of

Professor (Dr. Dr.) Michael S. Lebby, B. Eng. (Hons), MBA, Ph.D., D. Eng, Fellow NAI, IEEE, Optica (OSA); C. Eng.
1 Hawthorne St., unit 25a, San Francisco, CA 94105, USA; mobile +1 717 839 7078; drmlebby@gmail.com

BICFETs versus HBTs," Proceedings of the 1988 Bipolar Circuits and Technology Meeting, pp. 41-5, Sept. 1988.

60. Taylor, G.W.; Crawford, D.L.; Kiely, P.A.; Sargood, S.K.; Cooke, P.; Izabelle, A.; Chang, T.Y.; Tell, B.; **Lebby, M.S**.; Brown-Goebeler, K.; Simmons, J.G., "GaAs/AlGaAs inversion channel devices for an integrated opto-electronic technology," IEEE Transactions on Electron Devices, vol. 35, no. 12, pp. 2446, June 1988.
61. **Lebby, M.S**.; Taylor, G.W.; Izabelle, A.; Tell, B.; Brown-Goebeler, K.; Chang, T.-Y.; Simmons, J.G., "A p-channel BICFET in the InGaAs/InAlAs material system," IEEE Electron Device Letters, vol. 9 , no. 6 , pp. 278-80, June 1988.
62. Taylor, G.W.; **Lebby, M.S**.; Izabelle, A.; Tell, B.; Brown-Goebeler, K.; Chang, T.-Y.; Simmons, J.G., "Demonstration of a p-channel GaAs/AlGaAs BICFET," IEEE Electron Device Letters, vol. 9, no.2, pp.84-6, Feb. 1988.
63. Taylor, Geoffrey; **Lebby, M S**; Izabelle, A; Tell, B; Brown-Goebeler, K., "Demonstration of a p-channel GaAs/AlGaAs BICFET (Bipolar Inversion- Channel)," IEEE Electron Device Letters, vol. 9, pp. 84-86, Feb. 1988.
64. **Lebby, Michael Stephen**, "Fabrication And Characterisation Of The Heterojunction Field Effect Transistor (Hfet) And The Bipolar Inversion Channel Field Effect Transistor (Bicfet): Characterisation Of Hfets And Bicfets, Fabricated From Gallium-Arsenide/Aluminum-Gallium - Arsenide With Magnetron Ion Etching, Sputtered Tungsten Gates, Ion Implanted Source/Drain Contacts And Rapid Thermal Anneals," University Of Bradford, UK, 1987.
65. Taylor, G.W.; **Lebby, M.S**.; Chang, T.Y.; Gnall, R.N.; Sauer, N.; Tell, B.; Simmons, J.G., "GaAs/AlGaAs inversion channel devices for an integrated opto-electronic technology," Electronics Letters, vol. 23, no. 2, pp. 77-9, Jan. 1987.
66. Taylor, G.W.; **Lebby, M.S**.; Chang, T.Y.; Gnall, R.N.; Sauer, N.; Tell, B.; Tennant, D.M.; Simmons, J.G., "A new heterostructure FET," International Electron Devices Meeting 1986. Technical Digest, pp. 817-21, Dec. 1986.

PUBLIC MEDIA (Books, Chapters, Reports, Abstracts, Videos, Lectures, Speeches, Reviews, Courses, Talks, Invited Talks, Keynote Talks, Plenary Talks, Webinars, Interviews, Articles, etc.)

1986

1) Paper: A new heterostructure FET
    a. Dec 1986
    b. "Electron Devices Meeting, 1986 International Volume: 32 Digital Object Identifier: 10.1109/IEDM.1986.191323 Publication Year: 1986, Page(s): 817-821"

Professor (Dr. Dr.) Michael S. Lebby, B. Eng. (Hons), MBA, Ph.D., D. Eng, Fellow NAI, IEEE, Optica (OSA); C. Eng.
1 Hawthorne St., unit 25a, San Francisco, CA 94105, USA; mobile +1 717 839 7078; drmlebby@gmail.com

1987

2) Thesis: Fabrication and characterization of the heterojunction field effect transistor and the bipolar inversion channel field effect transistor
    a. 1987
    b. Characterization of HFETs and BICFETs fabricated from GaAs/AlGaAs with magnetron ion etching, sputtered tungsten gates, ion implanted source/drain contacts and rapid thermal anneals.
    c. University of Bradford, UK 1987
    d. http://www.edt.brad.ac.uk/home/
3) http://ieeexplore.ieee.org/stamp/stamp.jsp?tp=&arnumber=1486581Paper: Very high-transconductance heterojunction field-effect transistor (HFET)
    a. Jan 1987
    b. "A new form of FET has been demonstrated in the GaAs/AlGaAs material system. Designated the HFET, it has shown a transconductance of 500mS/mm at 300 K for a nominal Lg = 2/un and a drain current of 430mA/mm. The conduction occurs in an inversion channel at the heterointerface"
    c. "Electronics Letters Volume: 23, Issue: 2 Digital Object Identifier: 10.1049/el:19870056 Publication Year: 1987 , Page(s): 77 - 79"
    d. http://ieeexplore.ieee.org/stamp/stamp.jsp?tp=&arnumber=4257306
4) Talk and abstract: Magnetron Ion Etching of self aligned HFETs
    a. May 1987
    b. Electrochemical Society (ECS) Conference proceedings SOTAPOCS VI, Compound Semiconductors, Philadelphia
    c. http://www.electrochem.org/meetings/biannual/past_meetings_list.htm

1988

5) Paper: Demonstration of a p-channel GaAs/AlGaAs BICFET
    a. Feb 1988
    b. "Electron Device Letters, IEEE Volume: 9, Issue: 2 Digital Object Identifier: 10.1109/55.2048 Publication Year: 1988 , Page(s): 84 - 86"
    c. http://ieeexplore.ieee.org/stamp/stamp.jsp?tp=&arnumber=2048
6) Paper: GaAs/AlGaAs inversion channel devices for an integrated opto-electronic technology
    a. Jun 1988

Professor (Dr. Dr.) Michael S. Lebby, B. Eng. (Hons), MBA, Ph.D., D. Eng, Fellow NAI, IEEE, Optica (OSA); C. Eng.
1 Hawthorne St., unit 25a, San Francisco, CA 94105, USA; mobile +1 717 839 7078; drmlebby@gmail.com

   b. "Electron Devices, IEEE Transactions on Volume: 35, Issue: 12 Digital Object Identifier: 10.1109/16.8871 Publication Year: 1988"
   c. http://ieeexplore.ieee.org/stamp/stamp.jsp?tp=&arnumber=8871
7) Paper: A p-channel BICFET in the InGaAs/InAlAs material system
   a. Jun 1988
   b. "Electron Device Letters, IEEE Volume: 9, Issue: 6 Digital Object Identifier: 10.1109/55.716 Publication Year: 1988 , Page(s): 278 - 280"
   c. http://ieeexplore.ieee.org/stamp/stamp.jsp?tp=&arnumber=716&tag=1
8) Paper: An inversion channel technology for opto-electronic integration
   a. Sep 1988
   b. "Optical Communication, 1988. (ECOC 88). Fourteenth European Conference on (Conf. Publ. No.292), Publication Year: 1988, Page(s): 211 - 214 vol.1"
9) http://ieeexplore.ieee.org/stamp/stamp.jsp?tp=&arnumber=93560 Paper: Performance and advantages of BICFETs versus HBTs
   a. Sep 1988
   b. "Bipolar Circuits and Technology Meeting, 1988., Proceedings of the 1988 Digital Object Identifier: 10.1109/BIPOL.1988.51041 Publication Year: 1988 , Page(s): 41- 45"
   c. http://ieeexplore.ieee.org/stamp/stamp.jsp?tp=&arnumber=51041
10) Talk and abstract: RIE and MIE comparison for optoelectronic integrated circuit processing
   a. Nov 1988
   b. IEEE LEOS Conference, Santa Clara, California
11) Paper: Reactive ion etching (RIE) and magnetron ion etching (MIE) combinations for opto-electronic integrated circuit (OEIC) processing
   a. Nov 1988
   b. Proc. SPIE Vol. 1037, p. 88, Monitoring and Control of Plasma-Enhanced Processing of Semiconductors, James E. Griffiths; Ed.
   c. http://spie.org/x648.html?product_id=951018

1989

1) Paper: An n-channel BICFET in the InGaAs/InAlGaAs/InAlAs material system
   a. 1989
   b. "Electron Device Letters, IEEE Volume: 10 , Issue: 7 Digital Object Identifier: 10.1109/55.29660 Publication Year: 1989 , Page(s): 304 - 306"
   c. http://ieeexplore.ieee.org/stamp/stamp.jsp?tp=&arnumber=29660&tag=1
2) Paper: An n-channel BICFET in the GaAs/AlGaAs material system
   a. Feb 1989

Professor (Dr. Dr.) Michael S. Lebby, B. Eng. (Hons), MBA, Ph.D., D. Eng, Fellow NAI, IEEE, Optica (OSA); C. Eng.
1 Hawthorne St., unit 25a, San Francisco, CA 94105, USA; mobile +1 717 839 7078; drmlebby@gmail.com

   b. "Electron Device Letters, IEEE Volume: 10, Issue: 2 Digital Object Identifier: 10.1109/55.32438 Publication Year: 1989 , Page(s): 88 - 90"
   c. http://ieeexplore.ieee.org/stamp/stamp.jsp?tp=&arnumber=32438&tag=1
3) Paper: An Inversion Channel Technology For Opto-Electronic Integration
   a. 8th Feb 1989
   b. A new approach to optoelectronic integration is reported which combines electronic and optical devices fabricated with a common sequence and a single MBE wafer growth. The devices have in common, an inversion layer structure produced by charge sheet doping.
   c. Proceedings Vol. 0994 Optoelectronic Materials, Devices, Packaging, and Interconnects II, Glen M. McWright; Henry J. Wojtunik, Editors, pp.251-510 Date: 9 February 1989 ISBN: 9780819400291
   d. http://spie.org/x648.html?product_id=960136

1991

4) Invited talk and abstract: Use of VCSELs for the MONSOON parallel digital computer
   a. Jan 1991
   b. International workshop on architectures for free-space digital computing, Colorado.
5) Invited Paper and Presentation: Approaching the problem of high-density interconnects in the 'Monsoon' data-flow parallel processor with optics"
   a. 28th Jan1991
   b. AFOSR, ONR, DARPA: A compendium of position papers from the workshop on architectures for free space digital optical computing
   c. http://www.researchgate.net/publication/235184814_A_Compendium_of_Position_Papers_from_the_Workshop_on_Architectures_for_Free_Space_Digital_Optical_Computing_Held_in_Vail_Colorado_on_28-30_January_1991

1993

6) Invited talk and abstract: Optoelectronic Devices and Applications
   a. 1993
   b. IEEE workshop on optical interconnects
7) Invited talk and abstract: VCSEL Technology and Progress

Professor (Dr. Dr.) Michael S. Lebby, B. Eng. (Hons), MBA, Ph.D., D. Eng, Fellow NAI, IEEE, Optica (OSA); C. Eng.
1 Hawthorne St., unit 25a, San Francisco, CA 94105, USA; mobile +1 717 839 7078; drmlebby@gmail.com

a. 1993
b. IEEE Waves and Devices, Phoenix Section, Tempe, Arizona, Arizona State University

1994

8) Invited talk and abstract: Ridge waveguide VCSELs: improvement over planar VCSELs
   a. May 1994
   b. USA Laser workshop, CLEO, Baltimore, MD
9) Invited talk and abstract: Packaging VCSELs with GUIDECAST(tm) an overmolded waveguide packaging platform
   a. Aug 1994
   b. IEEE Tropical workshop on optoelectronic packaging, Breckenridge, Colorado.

1995

10) Paper: Parallel optical interconnects using VCSELs
   a. 1995
   b. "High Speed Semiconductor Devices and Circuits, 1995. Proceedings., IEEE/Cornell Conference on Advanced Concepts in Digital Object Identifier: 10.1109/CORNEL.1995.482526 Publication Year: 1995 , Page(s): 348 - 356"
   c. http://ieeexplore.ieee.org/stamp/stamp.jsp?tp=&arnumber=482526
11) Book: Research in VCSEL devices - Annual technical review1995
   a. 1995
   b. Annual collection of optoelectronic device and reliability department papers at the photonics technology center, Motorola, Tempe, USA.
   c. Key focus was the commercialization of VCSEL technology, especially at 850nm for the Optobus™ parallel array product and other associated VCSEL prototypes.
   d. Motorola
12) Invited talk and abstract: Ridge waveguide VCSEL device performance
   a. May 1995
   b. USA Laser workshop, CLEO, Anaheim, California
13) Invited talk and abstract: VCSEL Arrays and GUIDECAST(tm) packaging technology as used in OPTOBUS(tm)
   a. Sep 1995

Professor (Dr. Dr.) Michael S. Lebby, B. Eng. (Hons), MBA, Ph.D., D. Eng, Fellow NAI, IEEE, Optica (OSA); C. Eng.
1 Hawthorne St., unit 25a, San Francisco, CA 94105, USA; mobile +1 717 839 7078; drmlebby@gmail.com

b. European Laser Workshop, Eindhoven, Netherlands

1996

14) Book: Research in optoelectronic devices volume II
    a. 1996
    b. Annual collection of optoelectronic device and reliability department papers at the photonics technology center, Motorola, Tempe, USA. Key focus was the commercialization of VCSEL technology, especially at 850nm for the optobus parallel array product and other associated VCSEL prototypes. Demonstration of 660nm VCSELs discussed.
    c. Motorola
15) Paper: Low-cost high-performance optical interconnect
    a. 1996
    b. Proceedings, Conference on Lasers and Electro-Optics, (CLEO), vol 9, 1996
    c. http://ieeexplore.ieee.org/stamp/stamp.jsp?tp=&arnumber=864750
16) Paper: Key challenges and results of VCSELs in data links
    a. 1996
    b. "Lasers and Electro-Optics Society Annual Meeting, 1996. LEOS 96., IEEE Volume: 2 Digital Object Identifier: 10.1109/LEOS.1996.571604 Publication Year: 1996 , Page(s): 167 - 168 vol.2"
    c. http://ieeexplore.ieee.org/stamp/stamp.jsp?tp=&arnumber=571604
17) Paper: A low-cost high-performance optical interconnect
    a. 1996
    b. "Components, Packaging, and Manufacturing Technology, Part B: Advanced Packaging, IEEE Transactions on Volume: 19 , Issue: 3 Digital Object Identifier: 10.1109/96.533892 Publication Year: 1996 , Page(s): 532- 539"
    c. http://ieeexplore.ieee.org/stamp/stamp.jsp?tp=&arnumber=533892
18) Paper: Characteristics of VCSEL arrays for parallel optical interconnects
    a. 1996
    b. "Electronic Components and Technology Conference, 1996. Proceedings., 46th Digital Object Identifier: 10.1109/ECTC.1996.517404 Publication Year: 1996 , Page(s): 279 - 291"
    c. http://ieeexplore.ieee.org/stamp/stamp.jsp?tp=&arnumber=517404
19) Paper: Use of VCSEL arrays for parallel optical interconnects
    a. 10th Apr 1996
    b. Proc. SPIE 2683, Fabrication, Testing, and Reliability of Semiconductor Lasers, 81 (April 10, 1996); doi:10.1117/12.237679
    c. http://proceedings.spiedigitallibrary.org/proceeding.aspx?articleid=1015866

Professor (Dr. Dr.) Michael S. Lebby, B. Eng. (Hons), MBA, Ph.D., D. Eng, Fellow NAI, IEEE, Optica (OSA); C. Eng.
1 Hawthorne St., unit 25a, San Francisco, CA 94105, USA; mobile +1 717 839 7078; drmlebby@gmail.com

20) Paper: A low-cost high-performance optical interconnect
    a. Aug 1996
    b. The Optobus™ link is a ten channel parallel bidirectional data link based on multimode fiber ribbons. The guiding principal of the Optobus™ design was to produce an optical interconnect capable of competing with copper on price, not just performance. Recognizing that packaging dominates the cost of optical interconnects, the design focused on minimizing the complexity of the optical subassembly. A key component of this strategy is the use of AlGaAs/GaAs vertical cavity surface emitting lasers (VCSELs). Another is designing the silicon receiver and transmitter arrays around the module level packaging parasitics. The resulting parallel transceiver modules achieve a minimum throughput of 1.5 Gb/s in each direction with a power dissipation of 1.6 W
    c. Components, Packaging, and Manufacturing Technology, Part B: Advanced Packaging, IEEE Transactions on Volume: 19 , Issue: 3 Page(s): 532- 539
    d. http://ieeexplore.ieee.org/xpl/articleDetails.jsp?arnumber=533892
21) Invited talk and abstract: Ridge Waveguide and Planar VCSEL Device Reliability
    a. Sep 1996
    b. European Laser Workshop, Olso, Norway
22) Invited talk and abstract: Vertical cavity surface emitting lasers for communication applications
    a. Oct 1996
    b. Optical Society of America (OSA) Annual meetings, proceedings, paper WR1, Rochester, NY
23) Paper: Characteristics of VCSELs and VCSEL arrays for Optical Data Links
    a. 10th Dec 1996
    b. Motorola: Technical Enrichment Matrix Conference, Motorola SPS- SABA, Hilton Pavilion, Mesa, Az

1997

24) Paper: Effect of proton implantation on the degradation of GaAs/AlGaAs vertical cavity surface emitting lasers
    a. 1997
    b. Electronics Letters, ISSN 0013-5194, 1997, Volume 33, Issue 2, p. 137
    c. http://ieeexplore.ieee.org/xpl/articleDetails.jsp?arnumber=579434
25) Paper (invited): Laser safety issues with VCSEL arrays in OPTOBUS(tm)
    a. 1997
    b. Optical Society of America (OSA); Annual Meeting, Micro-optics session

Professor (Dr. Dr.) Michael S. Lebby, B. Eng. (Hons), MBA, Ph.D., D. Eng, Fellow NAI, IEEE, Optica (OSA); C. Eng.
1 Hawthorne St., unit 25a, San Francisco, CA 94105, USA; mobile +1 717 839 7078; drmlebby@gmail.com

26) Paper: Relative intensity noise of 780nm vertical cavity surface emitting lasers Jan 1997
    a. Proceedings of the 1997 Pacific Rim Conference on Lasers and Electro-Optics, CLEO/Pacific Rim, No 46984, Jan 1997
    b. http://ieeexplore.ieee.org/stamp/stamp.jsp?tp=&arnumber=610586
27) Paper: Characteristics of VCSELs and VCSEL arrays for optical data links
    a. Feb 1997
    b. Proc. SPIE 3004, Fabrication, Testing, and Reliability of Semiconductor Lasers II, 122 (May 1, 1997); doi:10.1117/12.273825
    c. http://proceedings.spiedigitallibrary.org/proceeding.aspx?articleid=918720
28) Paper: Parallel interconnect for a novel system approach to short distance high information transfer data links
    a. April 1997
    b. Proceedings of SPIE, ISSN 0277-786X, 04/1997, Volume 3038, Issue 1
    c. http://www.deepdyve.com/lp/spie/parallel-interconnect-for-a-novel-system-approach-to-short-distance-RFreDaEJjb
29) Paper: Vertical cavity surface emitting laser packaging with auto power control
    a. May 1997
    b. Proceedings, 47th Electronic Components and Technology Conference, pp. 368-370, May 1007
    c. http://www.researchgate.net/publication/3700010_Vertical_cavity_surface_emitting_laser_packaging_with_auto_powercontrol
30) Course (peer reviewed): "Optoelectronic devices and packaging"
    a. May 1997
    b. IEEE ECTC
    c. http://www.ectc.net
31) Paper: Vertical cavity surface emitting laser packaging with auto power control
    a. 18th May 1997
    b. Electronic Components and Technology Conference, 1997. Proceedings., 47th
    c. http://ieeexplore.ieee.org/xpl/articleDetails.jsp?tp=&arnumber=606195&contentType=Conference+Publications&sortType%3Dasc_p_Sequence%26filter%3DAND(p_IS_Number%3A13278)
32) Invited Talk and Abstract: VCSEL/detector technology for parallel optical interconnects
    a. 17th Jun 1997
    b. International Workshop for new technologies, interconnects, and communications in distributed and parallel systems by IRIT, ONERA, CERT, CNRS, and LAAS (France)
33) Invited talk and abstract: Vertical cavity surface emitting lasers and applications
    a. Sep 1997
    b. European Laser Workshop, Glasgow, Scotland

Professor (Dr. Dr.) Michael S. Lebby, B. Eng. (Hons), MBA, Ph.D., D. Eng, Fellow NAI, IEEE, Optica (OSA); C. Eng.
1 Hawthorne St., unit 25a, San Francisco, CA 94105, USA; mobile +1 717 839 7078; drmlebby@gmail.com

1998

34) Course and Tutorial: Optoelectronic Devices and Packaging: VCSEL Technology
    a. Jan 1998
    b. "Optoelectronic devices and packaging have found increasing use in many new products over the last 20 Yrs. This tutorial primarily will focus on semiconductor laser based technology with particular emphasis on emerging new technologies such as the Vertical Cavity Surface Emitting Laser (VCSEL) and how to take advantage of itâ€™s uniqueness in packaging. The tutorial will look at the driving factors required for low cost high volume VCSEL based packages and what impact they will have in tomorrows products. As there are many packaging solutions for VCSEL based technology proposed, the course will show the relative merits of popular new technologies with respect to high volume and low cost manufacturing.
    c. 4th IEEE Workshop on AST Phoenix Research Center
    d. http://www.ewh.ieee.org/soc/cpmt/ast98/lebby-01.ppt
35) Paper: ORMOCERs - new photo-patternable dielectric and optical materials for MCM-packaging
    a. Jan 1998
    b. Hybrid inorganic-organic polymers (ORMOCERs*) have been developed and tested in an ongoing EU-program (BE 7250 DONDOMCM) for evaluation in MCM applications. The photopattemable materials with negative resist behavior are composed o f inorganic oxidic structures cross-linked or substituted by organic groups. They are prepared from organosilane precursors by sol-gel-processing in combination with organic crosslinking of polymerizable organic functions. As a result of these functionalities the properties of the ORMOCERs can be adjusted to particular applications. Systematic variation of composition combined with adaptation to micro system technology allows great flexibility in processing. Some features of these materials are: Postbaking at moderate temperatures (120 "C - 180 "C) enables processing on substrates such as FR-4 and BT. Combined use as dielectric and passivation layers in electrical systems and devices as well as core and cladding for optical applications enables e/o applications with high integration levels. Easily adaptable to thin film technology: spin-on with planarization >90% and via diameters down to 20 pm have been achieved
    c. Proceedings of the 1998 48th Electronic Components and Technology Conference
    d. http://ieeexplore.ieee.org/xpl/articleDetails.jsp?reload=true&arnumber=678838&contentType=Conference+Publications
36) Paper and Invited talk: VCSEL Devices and Packaging for Fiber Optic Transceivers
    a. 30th Mar 1998
    b. OSA Technical Digest: Integrated Photonics Research (IPR) 1998 paper: IWD1

Professor (Dr. Dr.) Michael S. Lebby, B. Eng. (Hons), MBA, Ph.D., D. Eng, Fellow NAI, IEEE, Optica (OSA); C. Eng.
1 Hawthorne St., unit 25a, San Francisco, CA 94105, USA; mobile +1 717 839 7078; drmlebby@gmail.com

   c. http://www.opticsinfobase.org/abstract.cfm?URI=IPR-1998-IWD1
37) Paper: Automatic power control of a VCSEL using an angled lid TO56 package
   a. May1998
   b. 1998 Proceedings. 48th Electronic Components and Technology Conference
   c. http://ieeexplore.ieee.org/xpl/login.jsp?tp=&arnumber=678694&url=http%3A%2F%2Fieeexplore.ieee.org%2Fiel4%2F5582%2F14953%2F00678694.pdf%3Farnumber%3D678694
38) Paper: O/e-MCM packaging with new, patternable dielectric and optical materials
   a. May 1998
   b. Electronic Components & Technology Conference, 1998. 48th IEEE
   c. http://ieeexplore.ieee.org/xpl/login.jsp?tp=&arnumber=678929&url=http%3A%2F%2Fieeexplore.ieee.org%2Fiel4%2F5582%2F14953%2F00678929.pdf%3Farnumber%3D678929
39) Paper: ORMOCERs(TM)-new photo-patternable dielectric and optical materials for MCM-packaging
   a. May 1998
   b. Hybrid inorganic-organic polymers (ORMOCERs*) have been developed and tested in an ongoing EU-program (BE 7250 DONDOMCM) for evaluation in MCM applications. The photo-pattemable materials with negative resist behavior are composed of inorganic oxidic structures cross-linked or substituted by organic groups. They are prepared from organosilane precursors by sol-gel-processing in combination with organic crosslinking of polymerizable organic functions. As a result of these functionalities the properties of the ORMOCERs can be adjusted to particular applications. Systematic variation of composition combined with adaptation to micro system technology allows great flexibility in processing. Some features of these materials are: Post baking at moderate temperatures (120 "C - 180 "C) enables processing on substrates such as FR-4 and BT. Combined use as dielectric and passivation layers in electrical systems and devices as well as core and cladding for optical applications enables e/o applications with high integration levels. Easily adaptable to thin film technology: spin-on with planarization >90% and via diameters down to 20 pm have been achieved
   c. 1998 Proceeedings. 48th Electronic Components and Technology Conference
   d. http://ieeexplore.ieee.org/xpl/articleDetails.jsp?reload=true&arnumber=678838&contentType=Conference+Publications
40) Course (peer reviewed): "Optoelectronic devices and packaging: VCSEL technology"
   a. May 1998
   b. IEEE ECTC
   c. http://www.ectc.net
41) Co-Chairman Optoelectronics session, 48th ECTC Conference
   a. 25th May 1998
   b. Co-chairman Optoelectronics session, 48th ECTC Conference Seattle, Washington

Professor (Dr. Dr.) Michael S. Lebby, B. Eng. (Hons), MBA, Ph.D., D. Eng, Fellow NAI, IEEE, Optica (OSA); C. Eng.
1 Hawthorne St., unit 25a, San Francisco, CA 94105, USA; mobile +1 717 839 7078; drmlebby@gmail.com

c. ECTC, IEEE-CPMT, EIA/ECA
d. http://www.ectc.net

42) Invited Presentation and Abstract: VCSEL Technology - VCSEL technology is discussed with the work between AMP and MODE (division of EMCORE) fiber optics.
    a. Sep 1998
    b. ECOC European Laser Workshop (in association with ECOC 1998, Madrid, Spain
    c. https://openlibrary.org/books/OL22322573M/ECOC_'98_24th_European_Conference_on_Optical_Communication
    d.
43) Paper: Optical bistability in vertical cavity surface emitting lasers with a simple intra-cavity epitaxial absorber layer
    a. 4th Oct 1998
    b. Conference Digest: Semiconductor Laser Conference, 1998. ISLC 1998 NARA. 1998 IEEE 16th International
44) Talk: Optical bistability in vertical cavity surface emitting lasers with a simple intra-cavity epitaxial absorber layer
    a. 4th Oct 1998
    b. Conference Digest: Semiconductor Laser Conference, 1998. ISLC 1998 NARA. 1998 IEEE 16th International
    c.
45) Paper: Vertical cavity surface emitting laser-based parallel optical data link
    a. Dec 1998
    b. Optical Engineering, vol 37, no. 12, pp.3113-18, Dec. 1998.
    c. http://spie.org/x648.html?product_id=318648
46) Paper: VCSEL devices and packaging
    a. Dec 1998
    b. Proceedings of SPIE, ISSN 0277-786X, 05/2003, Volume 3289, Issue 1
    c. http://proceedings.spiedigitallibrary.org/proceeding.aspx?articleid=935769

1999

47) Paper and Interviewed Article: Commercial VCSEL Manufacturing
    a. Apr 1999
    b. Compound Semiconductor
48) Course (peer reviewed): "Optoelectronic devices and packaging: VCSEL and edge emitter technology"
    a. May 1999
    b. IEEE Electronics and components technology conference; San Diego, California

Professor (Dr. Dr.) Michael S. Lebby, B. Eng. (Hons), MBA, Ph.D., D. Eng, Fellow NAI, IEEE, Optica (OSA); C. Eng.
1 Hawthorne St., unit 25a, San Francisco, CA 94105, USA; mobile +1 717 839 7078; drmlebby@gmail.com

c. http://www.ectc.net

2000

49) Invited Panel Session: Opto Electronic Integrated Circuits - More IC than OE?
    a. 5th Mar 2000
    b. "The panel session focused on optical integration for communications. Other panel members included Brendan Hyland CEO of Kymata amongst others.
    c. OSA Executive Forum: Photonics and Telecommunications: the tidal wave of the new millennium
    d. http://www.laserfocusworld.com/articles/2000/02/osa-executive-forum-at-ofc-2000.html
50) Course: Optoelectronics Components and Modules for Datacom and Telecom
    a. May 2000
    b. Optoelectronics components and modules for the Telecommunication industry and Datacom Networks are rapidly advancing in terms of speed, lower cost and design. The main objectives of this course are to review the current and future trends for active devices and packaging technology for discrete components and data network modules. The course will cover in detail the fundamental active III-V devices and components used today and review current trends in both III-V device technology and packaging for telecom and datacom applications.
    c. Proceedings 50th Electronics Components and Technology Conference May 2000
    d. http://www.thierry-lequeu.fr/data/Ectc/ECTC2000/ECTC2000.pdf
51) Invited Presentation and Abstract: An investor's perspective on optical interconnects
    a. 24th May 2000
    b. The talk discusses the investor's perspective on optical interconnects from Intel Capital.
    c. IEEE: Workshop on interconnections within high=speed digital systesm
    d. http://www.oi-ieee.org/
52) Invited Presentation: Optoelectronic Integration for Metro DWDM: Intel's perspective...
    a. 3rd Sep 2000
    b. As part of the ECOC conference in Munich Germany, this workshop invited 9 speakers to discuss the future of optical networking in metropolitan environments.
    c. Electronicast Europe
    d. http://www.electronicastconsultants.com
53) Keynote Presentation: Optoelectronics Integration for Metro DWDM, Intel's Perspective
    a. 9th Oct 2000
    b. Electronicast Corporations: Optical communications start-up and emerging companies conference

Professor (Dr. Dr.) Michael S. Lebby, B. Eng. (Hons), MBA, Ph.D., D. Eng, Fellow NAI, IEEE, Optica (OSA); C. Eng.
1 Hawthorne St., unit 25a, San Francisco, CA 94105, USA; mobile +1 717 839 7078; drmlebby@gmail.com

c. http://www.electronicastconsultants.com

54) Panel Session: Semiconductors to Optics
   a. 6th Nov 2000
   b. Representing Intel at the conference, the panel explored the reasons why Intel was investing into photonics, optics, and fiber optic communications. Panel moderator was Drew Lanza, VC Morgenthaler.
   c. JP Morgan communications components conference: the convergence of optical components and communications ICs
   d. http://www.thefreelibrary.com/Endwave+Founder+and+EVP+To+Speak+at+JP+Morgan+Communications...-a067529552

2001

55) Paper: Optical components and their role in optical networks
   a. 2001
   b. Electronic Components and Technology Conference, 2001. Proceedings., 51st
   c. http://ieeexplore.ieee.org/xpl/login.jsp?tp=&arnumber=927765&url=http%3A%2F%2Fieeexplore.ieee.org%2Fxpls%2Fabs_all.jsp%3Farnumber%3D927765
56) Invited Presentation: "Starting a company and hitting the ground running"
   a. 7th Feb 2001
   b. Storm Ventures limited partner meeting
   c. http://www.stormventures.com
57) Keynote Talk: Industry 'Optomism'
   a. 30th Apr 2001
   b. Electronicast; Fiber Optics for the next decade conference; 13th Annual Monterey conference http://www.electronicastconsultants.com
58) Keynote Talk: Next decade in fiber optic communications
   a. 1st May 2001
   b. Electronicast: 13th Annual Fiber Optics for the Next Decade Conference
   c. http://www.photonics.com/Article.aspx?AID=8916
59) Panel session: Next decade in fiber optic communications
   a. 2nd May 2001
   b. Electroicast: 13th Annual Fiber Optics for the Next Decade Conference
   c. http://www.photonics.com/Article.aspx?AID=8916
60) Paper: OEICs: commercialization at last
   a. Jul 2001
   b. Compound Semiconductor, vol. 7. no. 6, pp. 81-2, 85, July 2001
   c. http://www.compoundsemiconductor.net/csc/features-details.php?cat=features&id=11719

Professor (Dr. Dr.) Michael S. Lebby, B. Eng. (Hons), MBA, Ph.D., D. Eng, Fellow NAI, IEEE, Optica (OSA); C. Eng.
1 Hawthorne St., unit 25a, San Francisco, CA 94105, USA; mobile +1 717 839 7078; drmlebby@gmail.com

2002

61) Book chapter: "Optical sources: Light-emitting diodes and laser technology"
    a. Published 2002
    b. "The Handbook includes chapters on all the major industry standards, quick reference tables, helpful appendices, plus a new glossary and list of acronyms. This practical handbook can stand alone or as a companion volume to DeCusatis: Fiber Optic Data Communication: Technological Advances and Trends (February 2002, ISBN: 0-12-207892-6), which was developed in tandem with this book.
    c. Academic Press (1998, 2002); ISBN: 0-12-207892-6; Handbook of Fiber Optic Data Communication By Casimer DeCusatis
    d. http://books.google.com/books?id=Rlb61Kknl8IC&printsec=frontcover&source=gbs_ge_summary_r&cad=0#v=onepage&q&f=false
62) Book chapter: "Semiconductor laser and light emitting diode fabrication"
    a. Published 2002
    b. "The Handbook includes chapters on all the major industry standards, quick reference tables, helpful appendices, plus a new glossary and list of acronyms. This practical handbook can stand alone or as a companion volume to DeCusatis: Fiber Optic Data Communication: Technological Advances and Trends (February 2002, ISBN: 0-12-207892-6), which was developed in tandem with this book.
    c. Academic Press: Editor DeCusatis: Fiber Optic Data Communication: Technological Advances and Trends (February 2002, ISBN: 0-12-207892-6)
    d. http://books.google.com/books?id=Rlb61Kknl8IC&lpg=PP1&pg=PP1#v=onepage&q&f=false
63) Keynote speech: "Business and Technical Perspectives for Optical Networking
    a. 14th Jul 2002
    b. PhoPack 2002 Stanford University
    c. http://www.accessmylibrary.com/coms2/summary_0286-25792277_ITMhttp://books.google.com/books/about/LEOS_88.html?id=LUS0cQAACAAJ
64) Interview Optcon (Japan), "Ignis Optics: Small is beautiful"
    a. 15th Aug 2002
    b. Overview of Ignis Optics strategy for fiber optic transceivers with innovative optoelectronic devices and packaging (in Japanese).
    c. Optcon volume 8, no 161, pp50-51
    d. http://magissuelist.nichigai.co.jp/detail?id=000000098732
65) Panel Session: An adventure into venture capital - lessons from silicon valley
    a. 12th Sep 2002

Professor (Dr. Dr.) Michael S. Lebby, B. Eng. (Hons), MBA, Ph.D., D. Eng, Fellow NAI, IEEE, Optica (OSA); C. Eng.
1 Hawthorne St., unit 25a, San Francisco, CA 94105, USA; mobile +1 717 839 7078; drmlebby@gmail.com

b. Evening forum discussion chaired by Professor Richard Harrison, Chair, with panel members Pitch Johnson (VC), Brendan Hyland (Nutrior Ventures), Jane Karwoski (All-hotels Ltd), and Colin Rutherford (Intelli Partners). Sponsored by Scottish Development International, University of Edinburgh, British Council

66) Invited Paper: Elegant cost-effective optical subsystems for next generation optical networks
   a. 13th Nov 2002
   b. Electronicast: 4th Annual OADM and advanced photonics communication networks conference - market and technology trends, San Mateo, California
   c. http://www.electronicastconsultants.com/

2004

67) Invited Paper (extended abstract) and Presentation: Automated commercial fabrication of wideband tunable lasers using ultra-high resolution e-beam lithography
   a. 27th Oct 2004
   b. IoP/CS-MAX extended abstract at the Compound Semiconductor Manufacturing Expo, Monterey, California, pp92-94 in the technical digest.
   c. http://www.compoundsemiconductor.net

2005

68) Book: Optoelectronic Markets 2005
   a. Jun 2005
   b. Comprehensive market report and forecast of current optoelectronics markets, needs, technologies, and applications. This report forecasts the current state and direction of the optoelectronics industry.
   c. OIDA
   d. http://www.oida.org/home/publications/oida-publication-report-library/
69) Cover story/Interview: Does a foundry model add up for InP optoelectronics
   a. Jul 2005
   b. Interview with Michael Hatcher from Compound Semiconductor magazine. Volume 11, Number 7, August 2005 pp 17-19
   c. Compound Semiconductor: Three-fives and silicon heterostructures
   d. http://www.compoundsemiconductor.net

Professor (Dr. Dr.) Michael S. Lebby, B. Eng. (Hons), MBA, Ph.D., D. Eng, Fellow NAI, IEEE, Optica (OSA); C. Eng.
1 Hawthorne St., unit 25a, San Francisco, CA 94105, USA; mobile +1 717 839 7078; drmlebby@gmail.com

70) Short Article: President's Letter to OIDA Membership
    a. Nov 2005
    b. OIDA Newsletter, quarterly from 2005-2009
    c. http://www.wsr-ods.com/files/oidanews_0408.pdf
71) Invited talk: Worldwide Optoelectronic Trends and Economic Opportunities.
    a. 18th Nov 2005
    b. UNCC 4th Annual symposium: UNC Charlotte Center for Optoelectronics and Optical Communications
    c. http://opticscenter.uncc.edu/node/275

2006

72) Workshop: 100 Gb Ethernet: The Next Challenge for Communications Systems
    a. 1st Oct 2006
    b. Workshop chairman and editor of the report: Abstract: The communications market is continuously evolving to provide better and cheaper services. These changes have led to the movement away from the traditional voice-switched networks to more data-centric packet networks. This report seeks to examine the next generation of Ethernet devices as we strain the technology limits at 100 Gb/s? How will datacom and telecom networks differ in their approaches? OIDA http://www.oida.org/home/publications/oida_publication_report_library/100_gb_ethernet_the_next_challenge_for_communi_(1)/
    c.
73) Workshop: The Challenge for Indium Phosphide Photonic Development and the Optical Foundry
    a. 2006
    b. "Workshop chairman and editor of the report.
    c. Abstract: Indium Phosphide, InP, is a semiconductor material with properties that make it particularly suitable for optoelectronic devices. Optical communications requirements drove its initial development. Recently, the applications for InP semiconductor devices have broadened to include high-speed electronics and optical sensors. This report examines the current state of the InP device market and its future direction. Addresses challenges for a pure foundry play and the role for InP devices. Seeks to find the best ways to address the needs for InP device development in the U.S."
    d. OIDA
    e. http://www.oida.org/home/publications/oida_publication_report_library/the_challenge_for_indium_phosphide_photonic_develo/

Professor (Dr. Dr.) Michael S. Lebby, B. Eng. (Hons), MBA, Ph.D., D. Eng, Fellow NAI, IEEE, Optica (OSA); C. Eng.
1 Hawthorne St., unit 25a, San Francisco, CA 94105, USA; mobile +1 717 839 7078; drmlebby@gmail.com

74) Workshop: Nitride LED and Laser Technology and Its Impact on the Display, Medical, and Storage Industries
    a. 2006
    b. Workshop chairman and editor of the report:
    c. Abstract: Since the development of p-type material in 1989, research in nitride emitter technology has developed rapidly over the last 15 years. This material system provided a new range of color applications that could be better utilized and with far better reliability than the II-VI material system. This report examines material systems and developments for short wavelength (green-ultraviolet) lasers and LEDs with techniques such as color-mixing and phosphor conversion.
    d. OIDA
    e. http://www.oida.org/home/publications/oida_publication_report_library/nitride_led_and_laser_technology_and_its_impact_on/
    f.
75) Invited Article: A New Model for the Optoelectronic Indium-based Semiconductor Industry
    a. May 2006
    b. OSA: Optics and Photonics News
    c. http://www.osa-opn.org/Content/ViewFile.aspx?id=10456
76) Book: Worldwide Optoelectronics Markets and Trends 2006
    a. Jun 2006
    b. Comprehensive market report and forecast of current optoelectronics markets, needs, technologies, and applications. This report forecasts the current state and direction of the optoelectronics industry.
    c. OIDA, 431 pages
    d. http://www.oida.org/home/publications/oida_publication_report_library/2006_global_optoelectronics_industry_market_report/
77) Workshop: High Power Diode Laser Sources and Their Impact on Industrial, Medical, and Military Laser Industries
    a. 1st Jul 2006
    b. Workshop chairman and editor of the report:
    c. Abstract: High power semiconductor laser diodes are used in several different market segments today. The technology continues to advance and improvements in efficiency and power are reported each year. Semiconductor laser diodes are used either directly or indirectly to enable new applications or as a replacement for older technology approaches. This report examines practical implementations and limitations for lasers in the 100 W to 100 kW range and roadmaps and developments anticipated over the next five years.
    d. OIDA
    e. http://www.oida.org/home/publications/oida_publication_report_library/high_power_diode_laser_sources_and_their_impact_on/
78) Workshop: Biophotonic Sensors and Smart Fiber Optic Sensor Networks
    a. 1st Aug 2006

Professor (Dr. Dr.) Michael S. Lebby, B. Eng. (Hons), MBA, Ph.D., D. Eng, Fellow NAI, IEEE, Optica (OSA); C. Eng.
1 Hawthorne St., unit 25a, San Francisco, CA 94105, USA; mobile +1 717 839 7078; drmlebby@gmail.com

b. Workshop chairman and editor of the report:
c. Abstract: This roadmap report examines biophotonic sensor opportunities from many perspectives including; government, industrial, university and venture capital. The markets, technologies, commercialization, and roadmap trends are presented in addition to promising areas for R & D.
d. OIDA
e. http://www.oida.org/home/publications/oida_publication_report_library/biophotonic_sensors_and_smart_fiber_optic_sensor_n/

79) Workshop: Wide Area Surveillance
a. 1st Oct 2006
b. Workshop chairman and editor of the report:
c. Abstract: This report examines wide area surveillance of pipelines and other strategic infrastructure as it is rapidly becoming an important issue on a worldwide basis. The increasing need for surveillance for both homeland security as well as defense applications should make this commercially attractive to both the defense as well as to commercial industry. (Report is 62 pages followed by hard copies of presentations from the forum.)
d. OIDA
e. http://www.oida.org/home/publications/oida_publication_report_library/wide_area_surveillance/

80) Invited Talk: OIDA optoelectronics markets, technology and opportunities for optofluidics
a. 20th Oct 2006
b. Organized by the DARPA center for optofluidics: translational research and commercialization workshop.
c. DARPA Optofluidics industry forum, UCSD San Diego, CA
d. http://www.biophot.caltech.edu/optofluidics/

81) Invited talk: Global optoelectronics technology roadmaps and trends
a. 27th Oct 2006
b. UNCC 5th Annual Symposium: UNC Charlotte Center for Optoelectronics and Optical Communications
c. http://opticscenter.uncc.edu/node/268

82) Workshop: Artificial vision systems
a. 1st Dec 2006
b. Workshop chairman and editor of the report:
c. Abstract: The ability to identify objects of interest and emerging threats around a vehicle in real time or by a warfighter looking for threats in a large field of view is currently severely hampered by the limitations of current algorithms and processing platforms. There have been recent advances in several technology areas, which if combined intelligently could solve this hard problem in enhancing situational awareness cost effectively. This report looks at the issues surrounding automated surveillance systems specifically looking at enhanced binoculars and convoy vehicle automated protection systems.

Professor (Dr. Dr.) Michael S. Lebby, B. Eng. (Hons), MBA, Ph.D., D. Eng, Fellow NAI, IEEE, Optica (OSA); C. Eng.
1 Hawthorne St., unit 25a, San Francisco, CA 94105, USA; mobile +1 717 839 7078; drmlebby@gmail.com

d. OIDA
e. http://www.oida.org/home/publications/oida_publication_report_library/artificial_vision_systems/

83) Keynote address: Global perspectives in optoelectronics and photonics
a. 6th Dec 2006
b. Photonics 21: European Union's 7th Framework Program Key Photonics Platform
c. http://www.photonics21.org/downloads/download_presentations.php

2007

84) Workshop: Micropackaging for the Next Generation of Optical and Electrical Components
a. 2007
b. Workshop chairman and editor of the report:
c. Abstract: Optical components are ubiquitous. Applications that use them include DVD players, audio devices, cell phones, re-writable drives, projection displays, and communication devices. This report concentrates on the role of micropackaging for the for next generation fiber optic components with an eye towards lower cost and higher volume.
d. OIDA
e. http://www.oida.org/home/publications/oida_publication_report_library/micropackaging_for_the_next_generation_of_optical/

85) Workshop: Silicon Photonics: Challenges and Future, 2007
a. 2007
b. Workshop chairman and editor of the report:
c. Abstract: Copper interconnects are currently used extensively within the data center environment. Fiber optic technology is used as a connectivity solution when higher performance is required and the cost differential compared to a copper solution is affordable. Fiber optic technology offers several key advantages over copper solutions for data transmission. This report looks at silicon photonics as a potential optical interconnect solution and addresses the issues and technology paths being pursued.
d. OIDA
e. http://www.oida.org/home/publications/oida_publication_report_library/silicon_photonics_challenges_and_future,_2007/

86) Workshop: Photonic Sensors Roadmapping Report, 2007
a. 2007
b. Workshop chairman and editor of the report:

Professor (Dr. Dr.) Michael S. Lebby, B. Eng. (Hons), MBA, Ph.D., D. Eng, Fellow NAI, IEEE, Optica (OSA); C. Eng.
1 Hawthorne St., unit 25a, San Francisco, CA 94105, USA; mobile +1 717 839 7078; drmlebby@gmail.com

c. Abstract: This OIDA workshop report examines application specific sensor needs for both the government and the private sector with an emphasis on the oil and gas market, sensing function integration, cost reduction opportunities, and barriers and competing technologies.
d. OIDA
e. http://www.oida.org/home/publications/oida_publication_report_library/photonic_sensors_roadmapping_report,_2007/

87) Paper: Fiber optic sensing technology: emerging markets and trends
a. 2007
b. Third European Workshop on Optical Fibre Sensors.
c. Edited by Cutolo, Antonello; Culshaw, Brian; Lopez-Higuera, Joshua Miguel.
d. Proceedings of the SPIE, Volume 6619, pp. 661902 (2007). (SPIE Homepage)
e. http://adsabs.harvard.edu/abs/2007SPIE.6619E...2H

88) Article: "Optoelectronics Technology: New and Exciting Markets in Consumer and Entertainment"
a. 10th Jan 2007
b. "The total optoelectronics components and enabled products grew 20% in 2005 to $364 billion, from $304 billion in 2004. Components grew 17% in 2005 to $104 billion, from $89 billion in 2004. When flat panel displays are excluded as components, components grew 10% in 2005 to $30 billion, from $27 billion in the previous year. Enabled products grew 21% to $260 billion in 2005, from $215 billion in 2004.
c. IEEE CPMT Santa Clara
d. http://www.cpmt.org/scv/meetings/cpmt0701.html

89) Abstract and conference invited talk: The case for a photonics foundry in USA
a. 27th April 2007
b. European Conference on Integrated Optics (2007): Towards foundries for photonic ICs
c. http://www.epixnet.org/index.php?id=393

90) Paper: Optoelectronics Roadmap OIDA-iNEMI optoelectronics for data communications, telecommunications, data center interconnects
a. May 2007
b. IEEE Packaging and Assembly

91) Workshop: 100 Gbit Interconnects and Above: The Need for Speed
a. 1st May 2007
b. Workshop chairman and editor of the report:
c. Abstract: The electronic society we live in today is seeing increased demand for data transfer, internet downloads, online applications, video sharing and storage. The electronic world of banks, companies, universities and governments require large secure datacenters connected to secure networks. This continuously drives for the development of more powerful servers and computer systems. This report examines needs and motivations for optical interconnect implementation. Looks

Professor (Dr. Dr.) Michael S. Lebby, B. Eng. (Hons), MBA, Ph.D., D. Eng, Fellow NAI, IEEE, Optica (OSA); C. Eng.
1 Hawthorne St., unit 25a, San Francisco, CA 94105, USA; mobile +1 717 839 7078; drmlebby@gmail.com

at the applications, history, market drivers, and future issues that affect this crossover.

d. OIDA
e. http://www.oida.org/home/publications/oida_publication_report_library/100_gb_ethernet_the_next_challenge_for_communicati/

92) Book: 2007 Global Optoelectronics Industry Market Report and Forecast
   a. Jun 2007
   b. Comprehensive market report and forecast of current optoelectronics markets, needs, technologies, and applications. This report forecasts the current state and direction of the optoelectronics industry.
   c. OIDA, 517 pages
   d. http://www.oida.org/home/publications/oida_publication_report_library/2007_global_optoelectronics_industry_market_report/

93) Paper: Growing at light speed
   a. The article discusses the significance of optoelectronics in high technology manufacturing industries. Optoelectronics components are being used in the manufacturing cameras of mobile phones, plasma display panel TVs and LCD TVs, among others. Since its application allows product differentiation and innovation, it has spurred growth in segments such as the consumer/entertainment, computer and communications industries. The article also discusses the differences in the material and processing equipment such as silicon photonics.
   b. Sep 2007
   c. IEEE Circuits Assembly; Sep 2007, Vol. 18 Issue 9, p44
   d. http://www.thefreelibrary.com/Growing+at+light+speed%3a+after+a+false+start%2c+OE+is+fast+becoming+a...-a0168812805

94) Keynote/special invited talk: "10 Grand Challenges in Photonics"
   a. 31st Oct 2007
   b. Sixth annual symposium UNCC Optoelectronics Center
   c. http://opticscenter.uncc.edu/node/265

2008

95) Workshop: Perspectives on the Optoelectronics Industry: Manufacturing in the 21st Century, 2008
   a. 2008
   b. Workshop chairman and editor of the report:
   c. Abstract: This report provides insight and perspectives by senior-level representatives from industry on global trade and manufacturing practices in the

Professor (Dr. Dr.) Michael S. Lebby, B. Eng. (Hons), MBA, Ph.D., D. Eng, Fellow NAI, IEEE, Optica (OSA); C. Eng.
1 Hawthorne St., unit 25a, San Francisco, CA 94105, USA; mobile +1 717 839 7078; drmlebby@gmail.com

field of optoelectronics. Three areas examined are: 1) Can automation or optical integration relieve the momentum to outsource and off-shore manufacturing from North America? 2) The supply chain and the economics of manufacturing in the U.S., Europe, and Asia, and 30 The implications of offshore manufacturing on both the U.S. defense and commercial market sectors within the different fields of optoelectronics.

d. OIDA
e. http://www.oida.org/home/publications/oida_publication_report_library/perspectives_on_the_optoelectronics_industry_manuf/

96) Workshop: Perspectives on the Optoelectronics Industry: Innovation, 2008
a. 2008
b. Workshop chairman and editor of the report: Abstract: This report documents some of the issues raised at the Optoelectronics Industry Development Association (OIDA) forum and provides a review on the critical issue of innovation in the U.S. and the impact it has on future American competitiveness and technology leadership. This report looks at innovation and R&D from many perspectives: global, business. university, government funding agencies.
c. OIDA
d. http://www.oida.org/home/publications/oida_publication_report_library/perspectives_on_the_optoelectronics_industry_innov/

97) Workshop: Perspectives on the Optoelectronics Industry, 2008
a. 2008
b. Workshop chairman and editor of the report:
c. Abstract: The United States is falling behind in the manufacturing, packaging, and assembling of optoelectronics products. Innovating technology may also be imperiled. This report is the result of the first of three optoelectronic forums sponsored by the Defense Advanced Research Projects Agency (DARPA), This report details the trends, findings, and directions for optoelectronics in each of these market applications. Included in the first chapter of this report is the global optoelectronics summary that was compiled by OIDA in 2007.
d. OIDA
e. http://www.oida.org/home/publications/oida_publication_report_library/perspectives_on_the_optoelectronics_industry,_2008/

98) Workshop: Future Optical Communication Systems, 2008
a. 2008
b. Workshop chairman and editor of the report:
c. Abstract: This report examines future optical communication needs and technologies. Topics include: Networks, Core, Metro, and Access Technology, photonic integration, and markets.
d. OIDA
e. http://www.oida.org/home/publications/oida_publication_report_library/future_optical_communication_systems,_2008/

99) Book chapter: Being an Intrapreneur and Entrepreneur in the Optoelectronics Industry

Professor (Dr. Dr.) Michael S. Lebby, B. Eng. (Hons), MBA, Ph.D., D. Eng, Fellow NAI, IEEE, Optica (OSA); C. Eng.
1 Hawthorne St., unit 25a, San Francisco, CA 94105, USA; mobile +1 717 839 7078; drmlebby@gmail.com

a. 2008
b. This book provides actual entrepreneurial stories giving insight into the pitfalls and successes one might find in starting or even continuing with a small high-tech business. Insights into innovative, speculative, and (largely) successful new ventures, as experienced by those who went through the process, are complemented by comments and observations from others in the field including researchers, economists, investors, regional development agencies, technology transfer organizations, and universities. The book is recommended to entrepreneurs in all high technology disciplines and in particular for students and early career professionals. It can be also useful for undergraduate and postgraduate courses in entrepreneurship, which many institutions are currently introducing, and to those who are interested in how a high-tech business might develop.
c. SPIE: Engineering a High-Tech Business: Entrepreneurial Experiences and Insights By JosÃ© Miguel LÃ³pez-Higuera, B. Culshaw (Editors) ISBN 978-0-8194-7180-2
d. http://books.google.com/books?hl=en&lr=&id=wXV9tffoGeYC&oi=fnd&pg=PR9&dq=michael+lebby&ots=cYEwXIHMDC&sig=KlCtj2ZDgbOYEhnqKdHiMo6SdzA#v=onepage&q=michael%20lebby&f=false

2009

100) Workshop: Green Photonics: The Role of Optoelectronics in a Sustainable Future, 2009
a. 2009
b. Workshop chairman and editor of the report:
c. Abstract: This report explores the optoelectronics expectations for green photonics technology, and forecasts the associated markets through 2020. The cultural impact for a green, clean, and energy efficient lifestyle is just beginning. Over the next decade, many innovative new products will emerge in a variety of industries that will better define and demonstrate green photonics technology. It is clear to many that a broad range of products and services that the economy will utilize over the next decade will contain optoelectronics (interchangeable with the term photonics), either as key components or as components that enable better and more efficient systems.
d. OIDA
e. http://www.oida.org/home/publications/oida_publication_report_library/green_photonics_the_role_of_optoelectronics_in_a_s/

101) Conference: Optomism: "Powering the green revolution through photonics"

Professor (Dr. Dr.) Michael S. Lebby, B. Eng. (Hons), MBA, Ph.D., D. Eng, Fellow NAI, IEEE, Optica (OSA); C. Eng.
1 Hawthorne St., unit 25a, San Francisco, CA 94105, USA; mobile +1 717 839 7078; drmlebby@gmail.com

a. 4th Jan 2009
b. "Co-chairman of Optomism conference with Pennwell.
c. OIDA and Pennwell (Laser Focus World)
d. http://www.laserfocusworld.com/articles/print/volume-45/issue-4/world-news/conference-preview-optomism-to-emphasize-lsquogreenrsquo-growth.html

102) Invited talk, short abstract, and session chairman: Energy Efficient Photonics
a. 19th Mar 2009
b. Summary: Green photonics initiatives: The role of optoelectronics in a sustainable future...
c. European Commission: High Level Event on ICT for Energy Efficiency
d. http://ec.europa.eu/information_society/events/cf/ee09/item-display.cfm?id=2174

103) Trial & Cross: Testimony before the US-China economic and security review commission on the optoelectronics industry
a. 24th Mar 2009
b. "Expert witness and testimony on Capitol Hill
c. Final oral comments: In preparing this testimony, many people I contacted stressed the importance of decisive action by the U.S. government and industry now. Optoelectronics sits at the intersection of multiple technical disciplines. U.S. universities and industry are particularly adept at bringing diverse people together to work on complex problems. We have, by the nature of our inherent diversity, an advantage. What for many presents a challenge, for us comes naturally. Thank you for this opportunity to present our industry's perspective. "
d. United States China Commission
e. http://www.uscc.gov/hearings/2009hearings/written_testimonies/09_03_24_wrts/09_03_24_lebby_statement.pdf

104) Report: Photonics industry-university collaborations (PICs)
a. 1st Jun 2009
b. OIDA Final Technical Report
c. http://oai.dtic.mil/oai/oai?verb=getRecord&metadataPrefix=html&identifier=ADA502737

105) Paper: Green photonics technology and markets
a. Sep 2009
b. Green photonics technology will open up opportunities over the next decade for new and creative products to be designed as the interest in a green, clean and energy efficient lifestyle continues to grow. This overview forecasts the optoelectronics expectations for green photonics technology and associated markets over the next decade and explores just a few of the exciting opportunities from green photonics technology.
c. Electronics Letters, Vol 45, issue 20
d. http://ieeexplore.ieee.org/xpl/login.jsp?tp=&arnumber=5270369&url=http%3A%2F%2Fieeexplore.ieee.org%2Fiel5%2F2220%2F5270368%2F05270369.pdf%3Farnumber%3D5270369

106) Paper: Photonic Intgeration: what is the Holy Grail?

Professor (Dr. Dr.) Michael S. Lebby, B. Eng. (Hons), MBA, Ph.D., D. Eng, Fellow NAI, IEEE, Optica (OSA); C. Eng.
1 Hawthorne St., unit 25a, San Francisco, CA 94105, USA; mobile +1 717 839 7078; drmlebby@gmail.com

a. 14th Oct 2009
b. Compound Semiconductor
c. http://compoundsemiconductor.net/csc/features-details.php?id=40435

107) Keynote talk: Global optoelectronics and green photonics trends
a. 28th Oct 2009
b. UNCC 8th Annual Symposium: Optoelectronics Center
c. http://opticscenter.uncc.edu/node/255

108) Keynote talk and abstract: Is this the rise of green photonics?
a. Dec 2009
b. ICFO (Institut de Ciancies Fotoniques) Barcelona, Spain
c. http://www.icfo.es/images/news/ICFO%20CLP%20DAY%20Program.pdf

109) Book: 2009 Global Optoelectronics Industry Market Report and Forecast
a. Dec 2009
b. Comprehensive market report and forecast of current optoelectronics markets, needs, technologies, and applications. This report forecasts the current state and direction of the optoelectronics industry.
c. OIDA, 545 pages
d. http://www.oida.org/home/publications/oida_publication_report_library/2009_global_optoelectronics_industry_market_report/

110) Video presentation: Living at the speed of light
a. 10th Dec 2009
b. Living at the speed of light, hosted by renown physicist Michael Lebby, takes us on a fast paced fly through of the many facets of photonics and how the use of light touches the many aspects of our lives
c. National Research Council: Canadian Photonics Fabrication Centre
d. http://www.youtube.com/watch?v=t8EB-1-1irY

111) Book chapter: Packaging of Optical Components and Systems
a. 27th Dec 2009
b. "In this article, several types of semiconductor optical components are introduced, and packaging of optical components and systems will be discussed. Specifically, three common types of optical sources will be addressed: light emitting diodes (LED), edge-emitting semiconductor lasers, and vertical cavity surface emitting lasers (VCSEL).
c. Wiley Encyclopedia of Electrical and Electronics Engineering; DOI: 10.1002/047134608X.W2106; originally published in 1999, Vol 15, pp 499-516; John G Webster (Editor)
d. http://onlinelibrary.wiley.com/doi/10.1002/047134608X.W2106/abstract

2010

Professor (Dr. Dr.) Michael S. Lebby, B. Eng. (Hons), MBA, Ph.D., D. Eng, Fellow NAI, IEEE, Optica (OSA); C. Eng.
1 Hawthorne St., unit 25a, San Francisco, CA 94105, USA; mobile +1 717 839 7078; drmlebby@gmail.com

112) Workshop: Fabrication Challenges and Opportunities in Photonics, 2010
   a. 2010
   b. Workshop chairman and editor of the report: Abstract: This report examines different operational models employed by industry (fabless, fab-lite, pure play foundry and vertically integrated companies), and the role of governments in stimulating the growth of the photonics industry.
   c. OIDA
   d. http://www.oida.org/home/publications/oida_publication_report_library/fabrication_challenges_and_opportunities_in_photon/

113) Video and presentation: Green Photonics: Will it Change our Lives over the Next Decade?
   a. April 2010
   b. Photonics is growing to enable new green technologies and products. Photonics already has a large presence in various modules and components with opportunities to expand to home displays, solar cells, lighting, and various consumer applications. The global optoelectronics industry has a strong outlook for growth in the near future, with even faster growth in green photonics. Green photonics can help reduce greenhouse gas emissions, generate or conserve energy, reduce pollution, and improve human health.
   c. University of California, Santa Barbara: Institute of Energy Efficiency
   d. http://iee.ucsb.edu/node/1024

114) Conference and workshop: 3rd Annual Green Photonics Forum (OIDA Green 2010)
   a. 10th Jun 2010
   b. Conference chairman: OIDA's innovative green photonics forums have become a focal point for photonics and optics in the area of sustainable energy. The annual forum on green photonics, brings together key players involved in developing the technical and business roles of photonics in building a more sustainable and renewable future. Efficiency, monitoring, and energy generation are areas where photonics technology will play a key role and the photonics industry will deliver solutions.
   c. OIDA
   d. http://www.clocate.com/conference/3rd-Annual-Green-Photonics-Forum-OIDA-Green-2010/4045/

115) Paper: Silicon light emitting device based on rare earth oxide superlattice
   a. Sep 2010
   b. 7th IEEE International conference on Group IV photonics, Beijing China
   c. http://ieeexplore.ieee.org/xpl/login.jsp?tp=&arnumber=5643407&url=http%3A%2F%2Fieeexplore.ieee.org%2Fiel5%2F5623516%2F5643317%2F05643407.pdf%3Farnumber%3D5643407

Professor (Dr. Dr.) Michael S. Lebby, B. Eng. (Hons), MBA, Ph.D., D. Eng, Fellow NAI, IEEE, Optica (OSA); C. Eng.
1 Hawthorne St., unit 25a, San Francisco, CA 94105, USA; mobile +1 717 839 7078; drmlebby@gmail.com

2011

116) Paper: Study of the Structural and Thermal Properties of Single Crystalline Epitaxial Rare-Earth-Metal Oxide Layers Grown on Si(111)
   a. 2011
   b. ECS Transactions 16, 161 (2011)
   c. http://ecst.ecsdl.org/content/41/3/161
117) Webinar and presentation
   a. 29th Mar 2011
   b. "The future of photonics webinar and presentation: The Future of Photonics: Three Perspectives brings together three expert viewpoints on the future of the photonics industry (Michael Lebby will be the expert on market trends and photonic integrated circuits (PICs)). You will learn: global optoelectronics market outlook through 2021 trends in photonic integrated circuits over the next two decades."
   c. Photonics Media
   d. http://www.photonics.com/Webinar.aspx?WebinarID=7
118) Keynote invited speech: Green Photonics and GaN-on-Si for LEDs and Ge-on-Si for high Efficiency Multi-junction for PVs
   a. Dec 2011
   b. Conference proceedings: High Capacity Optical Networks and Enabling Technologies (HONET), 2011
   c. http://honet.uncc.edu/archive/honet11/speakers.htm

2012

119) Paper: Structural and Thermal Properties of Single Crystalline Epitaxial Gd2O3 and Er2O3 Grown on Si(111)
   a. 2012
   b. ECS Journal of Solid State Science and Technology 1, N24 (2012)
   c. http://jss.ecsdl.org/content/1/2/N24.full.pdf+html
120) Paper: Epitaxial Si, SiGe and Ge on binary and ternary rare earth oxide buffers
   a. 2012
   b. Phys. Status Solidi C 9, 2031 (2012)
   c. http://onlinelibrary.wiley.com/doi/10.1002/pssc.201200255/abstract
121) Paper: Integrated high reflectivity silicon substrates for GaN LEDs
   a. 13th Jan 2012

Professor (Dr. Dr.) Michael S. Lebby, B. Eng. (Hons), MBA, Ph.D., D. Eng, Fellow NAI, IEEE, Optica (OSA); C. Eng.
1 Hawthorne St., unit 25a, San Francisco, CA 94105, USA; mobile +1 717 839 7078; drmlebby@gmail.com

b. Volume 9, Issue 3-4, pages 814-817, March 2012, physica status solidi (c)
c. http://onlinelibrary.wiley.com/doi/10.1002/pssc.201100393/abstract

122) Paper: Integrated high reflectivity silicon substrates for GaN LEDs
a. 13th Jan 2012
b. "Conference Publication: ICNS-9 "Contributed Article Integrated high reflectivity silicon substrates for GaN LEDs
c. F. Erdem Arkun*,Rytis Dargis, Robin Smith, David Williams, Andrew Clark, Michael Lebby
d. Article first published online: 13 JAN 2012" ICNS-9 "Contributed Article Integrated high reflectivity silicon substrates for GaN LEDs
e. http://onlinelibrary.wiley.com/doi/10.1002/pssc.201100393/abstract

123) Paper: Rare-earth-metal oxide buffer for epitaxial growth of single crystal GeSi and Ge on Si(111)
a. 1st Mar 2012
b. Conference and journal publication."Rare-earth-metal oxide buffer for epitaxial growth of single crystal GeSi and Ge on Si(111)"
c. With publication details: 28th North American Molecular Beam Epitaxy Conference, Published by AVS through the American Institute of Physics, 2012 ISBN 978-0-9836933-0-7 ISSN: 2166-27646 J.Vac.Sci.Technol B 30(2), Mar/Apr 2012 pp02B110-1 to pp-3B110-6
d. http://ieeexplore.ieee.org/xpl/articleDetails.jsp?reload=true&arnumber=6118290&contentType=Journals+%26+Magazines

124) Paper: Scalable virtual Ge templates for III-V integration on Si wafers
a. 18th April 2012
b. AIP Conference Proceedings / Volume 1477 / CONCENTRATOR SOLAR CELLS, CELL ASSEMBLIES AND RELATED MATERIALS
c. http://proceedings.aip.org/resource/2/apcpcs/1477/1/36_1?bypassSSO=1

125) Paper and talk: Engineering of the Interface Between Silicon and Rare-Earth Oxide Buffer for GaN growth
a. Sept 2012
b. ECS Meeting Oct 2013, San Francisco, USA
c. http://scholar.googleusercontent.com/scholar?q=cache:l3-oHWxNDzwJ:scholar.google.com/+%22michael+lebby%22&hl=en&as_sdt=1,5&as_ylo=2013&as_vis=1

126) Paper: Scalable GaN-on-Silicon using rare earth oxide buffer layers
a. 9th Oct 2012
b. ECS Trans 2013 volume 50, issue 9, 1065-1071
c. http://ma.ecsdl.org/content/MA2012-02/30/2538.short

2013

Professor (Dr. Dr.) Michael S. Lebby, B. Eng. (Hons), MBA, Ph.D., D. Eng, Fellow NAI, IEEE, Optica (OSA); C. Eng.
1 Hawthorne St., unit 25a, San Francisco, CA 94105, USA; mobile +1 717 839 7078; drmlebby@gmail.com

127) Paper: Expitaxial Si and Gd2O3 Heterostructures - Distributed Bragg Reflectors with Stress Management Function for GaN on Si Light Emitting Devices
   a. 2013
   b. ECS Trans 2013 volume 50, issue 4, 47-52
   c. http://ecst.ecsdl.org/content/50/4/47.short
128) Article: OPTICAL MATERIALS: 'On-silicon' engineered substrates speed photonic device development
   a. 1st Apr 2013
   b. Laser Focus World
   c. http://www.laserfocusworld.com/articles/print/volume-49/issue-04/features/optical-materials---on-silicon--engineered-substrates-speed-phot.html
129) Paper & Poster: 100Gb/s Multi-guide vertical integration transmitter PIC in InP for fiber-optics interconnects
   a. 24th Sep 2013
   b. Sasa Ristic and Michael Lebby, Valery Tolstikhin, and Kirill Pimenov,
   c. ECOC 2013
   d. http://www.ecoc2013.org/sc2.html
130) Paper: Epitaxial Si and Gd2O3 Heterostructures - Distributed Bragg Reflectors with Stress Management Function for GaN on Si Light Emitting Devices
   a. 1st Oct 2012
   b. ECS J. Solid State Sci. Technol. 1, 246 (2012)
   c. http://jss.ecsdl.org/content/1/5/P246.full
131) Growth of GaN by MOCVD on rare earth oxide on Si(111)
   a. 31st Oct 2013
   b. ECS Transactions, 58, 455 (2013)
   c. http://ecst.ecsdl.org/content/58/4/455.short
132) Invited talk/plenary: Next generation ICs using photonics integration
   a. 10th Dec 2013
   b. Talk that reviews OneChip Photonics technology and in general PICs, OEICs, Silicon photonics, and how these technologies play into datacenters (data centers), data center interconnects, data communications, data center fiber management for client side high speed 100G fiber (fibre) optic transceiver interconnects and cabling.
   c. IQE Capital markets day, Sky Pavillion, Rothschild Building, London, UK
   d. http://www.euroinvestor.com/news/2013/12/10/iqe-plc-capital-markets-day/12617916
133) Poster paper: A versatile InP OEIC (PIC) platform enabling 100G+ coherent receiver and client-side transceiver engines
   a. 12th Nov 2013
   b. Poster paper describing OneChip's latest results in coherent receivers, LR4 optical engines, and PSM4 optical engines.

Professor (Dr. Dr.) Michael S. Lebby, B. Eng. (Hons), MBA, Ph.D., D. Eng, Fellow NAI, IEEE, Optica (OSA); C. Eng.
1 Hawthorne St., unit 25a, San Francisco, CA 94105, USA; mobile +1 717 839 7078; drmlebby@gmail.com

c. Silicon Photonics Workshop, Southampton University, UK
d. http://www.orc.soton.ac.uk/UKSP_presents.html

134) Talk and panel session: Approaches for combining 3-5 and silicon, add functionality to Si photonics, heterogeneous versus hybrid integration, introduction of photonic platforms
a. 5th Dec 2013
b. Short presentation on PICs, OEICs, Si photonics, and combinations of these technologies from a revenue, investment, application and technology standpoint.
c. EPIC workshop: Meet or eat? collaboration and/or competition in photonic integrated circuits (PICs)
d. http://epic-assoc.com/contact-us/?at=94

135) Invited talk: Feedback USA/International related events
a. 5th Dec 2013
b. Feedback on the subject of InP PICs, OEICs, and silicon photonics from workshops and related international events from around the globe.
c. EPIC workshop: Meet or eat? Collaboration and/or competition in Photonic Integrated Circuits (PICs)?
d. http://epic-assoc.com/contact-us/?at=94

2014

136) Invited talk/plenary: High-Performance Datacenter Platform: Using InP for Silicon Photonics in data center environment
a. 8th Jan 2014
b. IEEE-CPMT/Photonics Society local chapter meeting, Santa Clara, California
c. http://www.cpmt.org/scv/meetings/cpmt1401.html

137) Invited talk/Panel session "Optical interconnect in datacenters"
a. 18th Mar 2014
b. "The 1st Optical Interconnect in Data Centers Symposium takes place on the 18th and 19th of March 2014 in Berlin/ Germany.
c. It is focused on high-performance, low-energy and low-cost and small-size optical interconnects across the different hierarchy levels in data center and high-performance computing systems: on-board, board-to-board and rack-to-rack.
d. EPIC: Symposium on optical interconnect in datacenters
e. http://www.phoxtrot.eu/1st-optical-interconnect-in-data-centers-symposium/

138) Keynote talk: Photonic integration in InP: A regrowth-free platform for fabless manufacturing model
a. 19th March 2014
b. CS International Conference Frankfurt, March 17th-20th 2014

Professor (Dr. Dr.) Michael S. Lebby, B. Eng. (Hons), MBA, Ph.D., D. Eng, Fellow NAI, IEEE, Optica (OSA); C. Eng.
1 Hawthorne St., unit 25a, San Francisco, CA 94105, USA; mobile +1 717 839 7078; drmlebby@gmail.com

c. http://cs-international.net/agenda.php

139) Invited talk/Panel session: InP based photonics integration platform for datacenter and coherent communications
   a. 2nd April 2014
   b. Invited talk/panel session on the future of integrated photonics. Discussion was on both InP and silicon photonics technologies over the next decade.
   c. Workshop on the future of Integrated Photonics organized by the Netherlands Office for Science & Technology is pleased to invite you to a workshop, occurring in conjunction with the upcoming Photonics West conference
   d. http://www.hollandinthevalley.com/panel-discussion-on-the-future-of-integrated-photonics/ that included data communications, datacenter applications, servers, routers, and data center switches.

140) Invited talk and abstract: Coherent Receiver Chip for 100G DP-QPSK
   a. 30th April 2014
   b. SIOE (Semiconductor and integrated optoelectronics) Conference, Cardiff, Wales, UK 29th April-1st May 2014, Institute of Physics
   c. http://www.astro.cardiff.ac.uk/research/cmp/events/resources/Sioeprogramme14final.pdf

141) Invited talk/keynote lecture: Compound semiconductors driving photonics technologies to become the future for high-speed communications through integration, performance, and sustainability
   a. 12th Jun 2014
   b. Glyndwr University, Wales, UK
   c. http://www.glyndwr.ac.uk/en/AboutGlyndwrUniversity/Newsandmediacentre/Newsarchive/PressReleases2014/UniWeek/

142) Invited Talk/Panel session: EPIC technology workshop on Photonic Integrated Circuits (PIC) packaging standardization
   a. 18th Jun 2014
   b. EPIC
   c. http://epic-assoc.com/contact-us/?at=94

143) Invited talk: Compound Semiconductors (CS) driving photonics
   a. 11th June 2014
   b. Invited presentation for Welsh Gvt and commercial industry in epitaxial growth. The talk covered photonics: global markets, green photonics, photonics technology sectors (lighting, solar, displays, sensors, communications), integrated photonics and silicon photonics. Commercial industry invite by International Quantum Epitaxy (IQE)
   c. Growth and application of epitaxial heterostructures with polymorphous rare earth oxides
   d. Journal of Crystal Growth
   e. http://www.sciencedirect.com/science/article/pii/S0022024812009487

144) Invited presentation for Day of Photonics at Glyndwr University: Photonics - markets, applications, integrated, next generation IC

Professor (Dr. Dr.) Michael S. Lebby, B. Eng. (Hons), MBA, Ph.D., D. Eng, Fellow NAI, IEEE, Optica (OSA); C. Eng.
1 Hawthorne St., unit 25a, San Francisco, CA 94105, USA; mobile +1 717 839 7078; drmlebby@gmail.com

a. 21st Oct 2014
b. Invited presentation/lecture on photonics at the Glyndwr University.
c. Welsh Optoelectronic Forum (WOF)
d. http://www.wof.org.uk/home.php?page_id=4&event_id=317

145) Invited talk and moderator: Integrated photonics pilot lines
a. 14th Nov 2014
b. "Photonics Pilot Line Workshop 14 November 2014 - Brussels, Belgium
c. European Commission and Photonics21
d. http://www.photonics21.org/download/Events/DraftagendaPhotonicsPilotLineworkshop-Website.pdf

2015

146) Invited talk: Integrated photonics roadmap synthesis
a. 7th May 2015
b. Integrated Photonics Institute for Manufacturing Innovation (IP-IMI) site visit technical review:
c. The University of Southern Californiaâ€™s (USC) Information Sciences Institute (ISI) is leading an effort with partner universities at the University of California-Los Angeles (UCLA), the University of California-Berkeley (UCB), the University of California-San Diego (UCSD), Arizona State University, the University of New Mexico, and the Ohio State University, as well as numerous industry partners, to develop the only California-based and led proposal to compete for the IP-IMI award. If successful, the proposal will receive a federal award of up to $110 million over five years. A successful proposal requires 100 percent or more in matching funds (cash or in-kind) from state and local governments and from industry partners.
d. IPI-CDMS (Integrated Photonics Institute and Center for Design and Manufacturing Services)
e. http://www.isi.edu/news/story/531784

147) Invited talk and Chair panel session: EPIC workshop on photonic integrated circuits; "Global integrated photonics update and roadmaps"
a. 9th Jun 2015
b. "Invited talk: Global integrated photonics update and roadmaps
c. Panel Session: Integrated photonics foundry status
d. EPIC trade association, Europe
e. http://www.epic-assoc.com/epic-workshop-on-photonic-integrated-circuits/

148) Keynote talk and invited abstract: "Integrated photonics as a vehicle for the next generation IC"

Professor (Dr. Dr.) Michael S. Lebby, B. Eng. (Hons), MBA, Ph.D., D. Eng, Fellow NAI, IEEE, Optica (OSA); C. Eng.
1 Hawthorne St., unit 25a, San Francisco, CA 94105, USA; mobile +1 717 839 7078; drmlebby@gmail.com

a. 9th Sep 2015
b. Internet Technology Applications (ITA) ITA-15 conference Wrexham, Wales, UK 8-11th Sept 2015
c. http://www.ita15.net/keynote-speaker/

149) Press interview: "Building Big Business with the Next Generation Integrated Circuits!"
a. 15th Sep 2015
b. "Insights from Michael Lebby, CEO OneChip Photonics Corporation, the keynote speaker at the Photonics Integration Conference
c. Photonics Integration Conference, organized by Jakajima, Netherlands
d. http://www.phiconference.com/photonics/building-big-business-with-the-next-generation-integrated-circuits/

150) Project advisor: European Commission ICT-28-2015 Cross-Cutting ICT KETs: Innovation Action (b) Pilot line for OLEDs on flexible substrates
a. 20th Sept 2015
b. European Commission
c. http://ec.europa.eu/research/participants/portal/desktop/en/opportunities/h2020/topics/916-ict-28-2015.html

151) Project advisor: European Commission ICT-28-2015 Cross-Cutting ICT KETs: Innovation Action (b) Pilot line for analytical mid-infrared (MIR) micro-sensors
a. 22nd Sep 2015
b. European Commission
c. http://ec.europa.eu/research/participants/portal/desktop/en/opportunities/h2020/topics/916-ict-28-2015.html

152) Keynote talk and abstract: "PIC the next generation IC..."
a. 23rd Sep 2015
b. Photonic Integration Conference, organized by Jakajima, Netherlands
c. http://www.phiconference.com/program/

153) Project advisor: European Commission ICT-28-2015 Cross-Cutting ICT KETs: Innovation Action (b) Pilot line for PIC fabrication on III-V and/or dielectric based platforms for PICs (Photonic Integrated Circuits)
a. 24th Sep 2015
b. European Commission
c. http://ec.europa.eu/research/participants/portal/desktop/en/opportunities/h2020/topics/916-ict-28-2015.html

154) Session organizer/Committee member: Market Focus at ECOC exhibit 2015
a. 28th Sep 2015
b. Session organizer/Committee member: Market Focus at ECOC exhibit 2015 with sessions in broadband access, datacentres, service provider optical transmission, network agility/SDN, photonics integration and packet optical transport. Nexus Business Media Ltd

Professor (Dr. Dr.) Michael S. Lebby, B. Eng. (Hons), MBA, Ph.D., D. Eng, Fellow NAI, IEEE, Optica (OSA); C. Eng.
1 Hawthorne St., unit 25a, San Francisco, CA 94105, USA; mobile +1 717 839 7078; drmlebby@gmail.com

c. http://webcache.googleusercontent.com/search?q=cache:Qb68vjzhV5IJ:www.ecocexhibition.com/visitorhome/marketfocus2015/cfs+&cd=1&hl=en&ct=clnk&gl=us&client=safari

2016

155) Reviewer: European Commission ICT-29-2016: Photonics KET 2016 (section a(i) Biophotonics: advanced imaging for in-depth disease diagnosis)
   a. 10th May 2016
   b. European Commission
   c. http://ec.europa.eu/research/participants/portal/desktop/en/opportunities/h2020/topics/5094-ict-29-2016.html

156) Reviewer: European Commission ICT-29-2016: Photonics KET 2016 (a(iii) Pervasive high-specificity and high-sensitivity sensing for a safer environment)
   a. 12th May 2016
   b. European Commission

157) Reviewer: European Commission ICT-29-2016 Photonics KET (b) Innovation Actions (i) Application driven core photonic devices integrated in systems.
   a. 14th May 2016
   b. European Commission
   c. http://ec.europa.eu/research/participants/portal/desktop/en/opportunities/h2020/topics/5094-ict-29-2016.html

158) European Commission Reviewer: European Commission ICT-29-2016 Photonics KET (b) Innovation Actions (ii) Pilot line for assembly and packaging
   a. 15th May 2016
   b. European Commission
   c. http://ec.europa.eu/research/participants/portal/desktop/en/opportunities/h2020/topics/5094-ict-29-2016.html
   d. http://ec.europa.eu/research/participants/portal/desktop/en/opportunities/h2020/topics/5094-ict-29-2016.html

159) Invited Talk: Annual Shareholder Meeting 2016 - Market Perspective LWLG Polymer Photonics vs Legacy Devices
   a. 20th May 2016
   b. Presentation to investor group at Lightwave Logic's Annual Shareholder Meeting Lightwave Logic
   c. http://lightwavelogic.com/company-updates/

160) Technical presentation for Lightwave Logic Inc., at the Annual Shareholder Meeting (ASM).
   a. 20th May 2016

Professor (Dr. Dr.) Michael S. Lebby, B. Eng. (Hons), MBA, Ph.D., D. Eng, Fellow NAI, IEEE, Optica (OSA); C. Eng.
1 Hawthorne St., unit 25a, San Francisco, CA 94105, USA; mobile +1 717 839 7078; drmlebby@gmail.com

b. Lightwave logic Inc., Boulder, Colorado.
c. Annual shareholder meeting for Lightwave Logic Inc., with live presentation with live Q&A from investors

161) Invited Presentation and abstract: "High-Performance Polymer Photonics for Next-Generation Photonic Integrated Circuits"
a. 3rd Oct 2016
b. ECOC Market Focus by ECOC Exhibition
c. http://www.ecocexhibition.com/marketfocus

162) Video Interview: ECOC Market Focus on Datacenters and emerging new PIC technologies that include silicon and polymer photonics
a. 3rd Oct 2016
b. Video taped interview by ECOC Exhibition Market Focus on Datacenters, data communications, high performance computing, data center fiber management and emerging new PIC technologies that include polymer photonics.
c. ECOC Exhibition
d. http://www.ecocexhibition.com/interviews2016

163) Panel session: European Commission ICT-29-2016: Photonics KET 2016 (section a(ii) Breakthrough in miniaturization of SSL light engines and systems); comment on industry and academic technology.
a. 5th Nov 2016
b. http://ec.europa.eu/research/participants/portal/desktop/en/opportunities/h2020/topics/5094-ict-29-2016.html

164) Reviewer: European Commission ICT-29-2016: Photonics KET 2016 (section a(ii) Breakthrough in miniaturization of SSL light engines and systems)
a. 5th Nov 2016
b. European Commission: Reviewing submitted technical photonics proposals for Horizon 2020, and rate proposals to EU guidelines.
c. http://ec.europa.eu/research/participants/portal/desktop/en/opportunities/h2020/topics/5094-ict-29-2016.html

2017

165) Invited Talk and Panelist: Emerging Technologies Summit; Integrated Photonics session, Stanford University, as part of the Kingdom of the Netherlands trade mission to Silicon Valley
a. 10th Jan 2017
b. "Discussion with HRH Prince Constantijn and DG Bertolt Leeftink about photonics ecosystem and startups. Photonics highlights (Michael Lebby)
c. Consulate General San Francisco, The Kingdom of Netherlands

Professor (Dr. Dr.) Michael S. Lebby, B. Eng. (Hons), MBA, Ph.D., D. Eng, Fellow NAI, IEEE, Optica (OSA); C. Eng.
1 Hawthorne St., unit 25a, San Francisco, CA 94105, USA; mobile +1 717 839 7078; drmlebby@gmail.com

d. https://ez.atavist.com/emerging-technologies-summit

166) Video: The importance of photonics roadmapping
a. 30th Jan 2017
b. Video on the importance of roadmapping photonics technologies at Photonics West San Francisco, 30th Jan 2017. Interview by Photon Delta.
c. http://www.photondelta.eu

167) Technical Advisor/Expert: 2nd review of MIRPHAB pilot line consortium funded by H2020 at European Commission
a. 20th Feb 2017
b. 2nd review for MIRPHAB consortium at the European Commission, Brussels
c. European Commission, Brussels
d. https://www.iaf.fraunhofer.de/en/research/research-areas/semiconductor-lasers/mirphab.html

168) Technical Advisor/Expert: 2nd review of PI-SCALE project pilot line funded by H2020, European Commission
a. 21st Feb 2017
b. 2nd review of PI-SCALE consortium pilot line at European Commission, Brussels
c. European Commission, Brussels, Belgium
d. http://pi-scale.eu

169) Technical Advisor/Expert: 1st review of PIXAPP pilot line consortium funded by H2020 at European Commission
a. 21st Feb 2017
b. 1st Review of Pixapp project at EU Commission as part of the pilot line project.
c. European Commission, Brussels
d. http://www.fabiodisconzi.com/open-h2020/projects/206352/index.html

170) Invited Talk: Belgium LWLG Investor Group at the Royal Antwerp Golf Club
a. 6th Mar 2017
b. Invited talk entitled "High performance polymer photonics for next generation PICs"
c. Belgium LWLG Investor Group
d. http://www.lightwavelogic.com

171) Chairman: PIC (Photonic Integrated Circuits) International Conference, Brussels, Belgium
a. 7th Mar 2017
b. "Photonic Integrated Circuits International
c. CS International
d. http://www.picinternational.net

172) Invited Talk: Photonics Integration Circuits - Global Market Analysis 2017
a. 13th Mar 2017
b. Invite by The Netherlands Department of Economics to review PIC technology and markets for potential investment.

Professor (Dr. Dr.) Michael S. Lebby, B. Eng. (Hons), MBA, Ph.D., D. Eng, Fellow NAI, IEEE, Optica (OSA); C. Eng.
1 Hawthorne St., unit 25a, San Francisco, CA 94105, USA; mobile +1 717 839 7078; drmlebby@gmail.com

c. The Dutch Government - Dept of Economics, The Hague together with Photon Delta, The Netherlands
d. http://www.photondelta.eu

173) Technical Advisor/Expert: 2nd review of PIX4LIFE pilot line consortium funded by H2020 at European Commission
a. 14th Mar 2017
b. 2nd review of PIX4LIFE pilot line consortium at the European Commission, Brussels.
c. European Commission, Brussels, Belgium
d. http://www.pix4life.eu

174) Keynote talk: Entitled "The rise of PIC based technologies over the next decade and how datacenters and telecom may enable other exciting applications"
a. 1st May 2017
b. Xilinx as part of their; "Xilinx silicon technology series seminars"
c. http://www.xilinx.com The talk included analysis on data centers, data communications, high performance computing, and fiber management systems that included routers, switches, servers and data center racks.

175) Invited Talk: Lightwave Logic Inc Annual Shareholder Meeting "High Performance Polymer Photonics for Next Generation PICs"
a. 18th May 2017
b. Presentation of corporate technology and strategy for Lightwave Logic Inc and polymer PIC platforms.
c. Lightwave Logic Inc (OTCQB:LWLG)
d. http://www.lightwavelogic.com/presentations

176) Management/CEO presentation for Lightwave Logic Inc., at the Annual Shareholder Meeting (ASM).
a. 18th May 2017
b. Lightwave logic Inc., Boulder, Colorado.
c. Annual shareholder meeting for Lightwave Logic Inc., with live presentation with live Q&A from investors.

177) Plenary Talk: Global Market Research at the World Technology Mapping Forum, s'Hertogenbosch, Netherlands
a. 14th Jun 2017
b. "PhotonDelta and the AIM Photonics Academy are organising the first meeting of the World Technology Mapping Forum. The goal of the forum is to produce the first International Photonic Systems Roadmap, looking ahead to global technology needs in 2030 and beyond.
c. PhotonDelta, Netherlands as part of the International Photonics System Roadmap (IPSR) conference
d. https://worldtechnologymappingforum.org/the-programme

178) Video interview: World Photonic Mapping Forum; s'Hertogenbosch, Netherlands
a. 15th Jun 2017
b. Interview on photonics roadmaps.

Professor (Dr. Dr.) Michael S. Lebby, B. Eng. (Hons), MBA, Ph.D., D. Eng, Fellow NAI, IEEE, Optica (OSA); C. Eng.
1 Hawthorne St., unit 25a, San Francisco, CA 94105, USA; mobile +1 717 839 7078; drmlebby@gmail.com

c. PhotonDelta (via Videographer Jonathan Marks)
d. https://worldtechnologymappingforum.org/the-programme

179) Invited video 'Lightwave Logic roadmaps for polymer photonics at the 3rd International Roadmap conference, Eindhoven, Netherlands
a. 16th June 2017
b. PhotonDelta video PR team
c. https://vimeo.com/317216466 Roadmap included directions for data communications, data centers, and high performance computing.

180) Invited talk and abstract: Polymer based PICs
a. 14th Sep 2017
b. ECOC, Datacenter technologies. Sweden

181) Video: Polymer based PICs
a. 15th Sep 2017 ECOC, Sweden as part of Market Focus at the ECOC Exhibit. (youtube: Michael Lebby ECOC 2017) with applications with data centers, high performance computing, and data communications.

182) Keynote invited talk and abstract: PIC based technologies
a. 22nd Sep 2017
b. PIC Conference, The Netherlands

183) Invited talk and abstract: Polymer PIC technology as part of the Photonics Integrated Circuits (PIC) conference in Eindhoven, Netherlands.
a. 5th Oct 2017
b. PIC technologies and polymer photonics

184) Invited talk: PIC Training conference/workshop in Sunnyvale, Silicon Valley
a. PIC training session/workshop
b. Talk included details on data center interconnect, high performance computing, roadmap for next generation data center interconnect technology.

185) Invited talk: Photonics Pilot Lines
a. 8th Dec 2017
b. European Commission, Photonics Proposers Meeting, Brussels

2018

186) International Roadmap meeting at Berenshot, Utrecht, Netherlands
a. 20th Jan 2018
b. Invited talk: International Roadmap meeting: Datacom/Telecom ICT markets, AOC, and Polymer PIC technology platforms including data communications, high performance computing, data center interconnect.

187) Co-Chairman: PIC (Photonic Integrated Circuits), International Conference, Brussels, Belgium

Professor (Dr. Dr.) Michael S. Lebby, B. Eng. (Hons), MBA, Ph.D., D. Eng, Fellow NAI, IEEE, Optica (OSA); C. Eng.
1 Hawthorne St., unit 25a, San Francisco, CA 94105, USA; mobile +1 717 839 7078; drmlebby@gmail.com

a. 10th Apr 2018
b. Photonic Integrated Circuits International
c. CS International
d. http://www.picinternational.net

188) Session chair and moderator: High volume, high performance PICs (Photonic Integrated Circuits) at the International Conference, Brussels, Belgium
a. 10th Apr 2018
b. Photonic Integrated Circuits International
c. CS International
d. http://www.picinternational.net

189) Session chair and moderator: Silicon Photonics (SiP) PICs (Photonic Integrated Circuits) at the International Conference, Brussels, Belgium
a. 11th Apr 2018
b. Photonic Integrated Circuits International
c. CS International
d. http://www.picinternational.net

190) Invited Talk: Scalable PIC platforms: "The impact of using polymer PICs for 100 and 400Gbps datacom applications," PICs (Photonic Integrated Circuits) at the International Conference, Brussels, Belgium
a. 10th Apr 2018
b. Photonic Integrated Circuits International
c. CS International
d. http://www.picinternational.net

191) Management/CEO presentation for Lightwave Logic Inc., at the Annual Shareholder Meeting (ASM).
a. 17th May 2018
b. Lightwave logic Inc., Denver, Colorado.
c. Annual shareholder meeting for Lightwave Logic Inc., with live presentation with live Q&A from investors.

192) Invited video 'Welcome to WTMF 18' at the 2nd International Roadmap conference, Eindhoven, Netherlands
a. 12th June 2018
b. PhotonDelta video PR team
c. https://vimeo.com/275376937

193) Reviewer: European Commission ICT-03-2018: Photonics Pilot lines (InP and silicon photonics PICs)
a. 11th Jun 2018
b. European Commission: Reviewing submitted technical photonics proposals for Horizon 2020, and rate proposals to EU guidelines.
c. http://ec.europa.eu/research/participants/portal/desktop/en/opportunities/h2020

194) Reviewer: European Commission ICT-04-2018: Tbps optical fiber optic transceivers
a. 11th Jun 2018

Professor (Dr. Dr.) Michael S. Lebby, B. Eng. (Hons), MBA, Ph.D., D. Eng, Fellow NAI, IEEE, Optica (OSA); C. Eng.
1 Hawthorne St., unit 25a, San Francisco, CA 94105, USA; mobile +1 717 839 7078; drmlebby@gmail.com

b. European Commission: Reviewing submitted technical photonics proposals for Horizon 2020, and rate proposals to EU guidelines.
c. http://ec.europa.eu/research/participants/portal/desktop/en/opportunities/h2020

195) Reviewer: European Commission ICT-04-2018: Connected lighting
a. 11th Jun 2018
b. European Commission: Reviewing submitted technical photonics proposals for Horizon 2020, and rate proposals to EU guidelines.
c. http://ec.europa.eu/research/participants/portal/desktop/en/opportunities/h2020

196) Workgroup chair and moderator: Telecom long haul roadmap committee at the International world mapping conference, Enschede, Netherlands
a. 20th Jun 2018
b. Photondelta Conference: chairing technical workgroup meetings to address photonics roadmap trends and challenges.
c. Photondelta in coordination with iNEMI, and AIM photonics.
d. https://www.photondelta.eu

197) Invited talk: Telecom, Datacom, and ICT roadmap committee at the International world mapping conference, Enschede, Netherlands
a. 20th Jun 2018
b. Photondelta Conference: chairing technical workgroup meetings to address photonics roadmap trends and challenges that included high performance computing, data centers, and data communications
c. Photondelta in coordination with iNEMI, and AIM photonics.
d. https://www.photondelta.eu

198) Invited talk and abstract: Pushing the performance of 50Gbps NRZ polymer modulators towards 100Gbps NRZ in a PIC platform to access 400 and 800Gbps data-rates
a. 25th Sep 2018
b. ECOC, Datacenter technologies. Sweden

199) Reviewer (European Commission) for pilot line PISCALE
a. 18th Sept 2018
b. European Commission, Brussels
c. PISCALE is a pilot line that is focused on bringing to commercial market flexible organic display technologies in both panel and reel to reel formats.

200) Reviewer (European Commission) for pilot line MIPHAB
a. 19th Sept 2018
b. European Commission, Brussels
c. MIPHAB is a pilot line that is focused on bringing to commercial market near infra-red devices and packaging for industrial, defense, military and high volume applications.

201) Video: Pushing the performance of 50Gbps NRZ polymer modulators towards 100Gbps NRZ in a PIC platform to access 400 and 800 Gbps datarates.
a. 25th Sept 2018

Professor (Dr. Dr.) Michael S. Lebby, B. Eng. (Hons), MBA, Ph.D., D. Eng, Fellow NAI, IEEE, Optica (OSA); C. Eng.
1 Hawthorne St., unit 25a, San Francisco, CA 94105, USA; mobile +1 717 839 7078; drmlebby@gmail.com

b. ECOC, Market Focus at the ECOC Exhibit, (Youtube: Michael Lebby ECOC 2018)

202) Invited talk and abstract: ECOC International Symposium on Hybrid PICs entitled "Polymer PICs: technology and prospects"
a. 26th Sept 2018
b. International Symposium on Hybrid PICs co-located at the ECOC conference, Rome, Italy.
c. The talk included high performance computing, data centers, and data communications

203) Reviewer (European Commission) for pilot line PIXAPP
a. 2nd Oct 2018
b. European Commission, Brussels
c. PIXAPP is a pilot line that is focused on bringing to commercial market PIC (photonic integrated circuit) packaging solutions for InP and silicon photonics based technologies.

204) Reviewer (European Commission) for pilot line PIX4LIFE
a. 3rd Oct 2018
b. European Commission, Brussels
c. PIX4LIFE is a pilot line that is focused on bringing to commercial market PIC dielectric solutions for applications in the visible wavelength range in the medical applications market.

2019

205) Invited talk: Polymer modulators and polymer PIC technologies: PIC Training conference/workshop in Sunnyvale, Silicon Valley
a. 28th Jan 2019
b. PIC training session/workshop at Keysight facility
c. The talk included high performance computing, data centers, and data communications

206) Reviewer (European Commission) for pilot line MIPHAB
a. 16th Feb 2019
b. European Commission, Brussels
c. MIPHAB is a pilot line that is focused on bringing to commercial market near infra-red devices and packaging for industrial, defense, military and high volume applications.

207) Reviewer (European Commission) for pilot line PIX4LIFE
a. 25th Mar 2019
b. European Commission, Brussels

Professor (Dr. Dr.) Michael S. Lebby, B. Eng. (Hons), MBA, Ph.D., D. Eng, Fellow NAI, IEEE, Optica (OSA); C. Eng.
1 Hawthorne St., unit 25a, San Francisco, CA 94105, USA; mobile +1 717 839 7078; drmlebby@gmail.com

c. PIX4LIFE is a pilot line that is focused on bringing to commercial market PIC dielectric solutions for applications in the visible wavelength range in the medical applications market.

208) Co-Chairman: PIC (Photonic Integrated Circuits), International Conference, Brussels, Belgium
   a. 26-27th Mar 2019
   b. Photonic Integrated Circuits International
   c. The talk included photonics for high performance computing, data centers, and data communications
   d. http://www.picinternational.net

209) Session chair and moderator: High volume, high performance PICs (Photonic Integrated Circuits) for Foundries at the International Conference, Brussels, Belgium
   a. 26th Mar 2019
   b. Photonic Integrated Circuits International
   c. CS International
   d. http://www.picinternational.net

210) Session chair and moderator: High volume PICs (Photonic Integrated Circuits) at the International Conference, Brussels, Belgium
   a. 27th Mar 2019
   b. Photonic Integrated Circuits International
   c. CS International
   d. http://www.picinternational.net

211) Invited Talk: Polymer PICs for 400Gbps+ datacom applications," PICs (Photonic Integrated Circuits) at the International Conference, Brussels, Belgium
   a. 27th Mar 2019
   b. Photonic Integrated Circuits International
   c. CS International
   d. http://www.picinternational.net

212) Reviewer (European Commission) for project CARDIS
   a. 18th Apr 2019
   b. European Commission, Brussels
   c. CARDIS is an EU project for PIC based technology to monitor blood flow and artery stiffness in the human body using long wavelength lasers and silicon photonics.

213) Management/CEO presentation for Lightwave Logic Inc., at the Annual Shareholder Meeting (ASM).
   a. 16th May 2019
   b. Lightwave logic Inc., Denver, Colorado.
   c. Annual shareholder meeting for Lightwave Logic Inc., with live presentation with live Q&A from investors with presentation: https://drive.google.com/file/d/1wh8irF8rmi9bU6VeGKAHFqVURyUcytdX/view?usp=sharing

Professor (Dr. Dr.) Michael S. Lebby, B. Eng. (Hons), MBA, Ph.D., D. Eng, Fellow NAI, IEEE, Optica (OSA); C. Eng.
1 Hawthorne St., unit 25a, San Francisco, CA 94105, USA; mobile +1 717 839 7078; drmlebby@gmail.com

214) Reviewer: European Commission ICT-03-2019: Fiber optic communications and bio-photonics for medical applications
   a. 6th June 2019
   b. European Commission: Reviewing submitted technical photonics proposals for Horizon 2020, and rate proposals to EU guidelines.
   c. http://ec.europa.eu/research/participants/portal/desktop/en/opportunities/h2020

215) Workgroup chair and moderator: Datacom roadmap committee at the International world mapping conference, Berlin, Germany
   a. 12th June 2019
   b. Photondelta Conference: chairing technical workgroup meetings to address photonics roadmap trends and challenges.
   c. Photondelta in coordination with iNEMI, and AIM photonics.
   d. https://www.photondelta.eu

216) Keynote speaker: 'Global markets for PIC technologies' at the 3rd International world mapping conference, at the Fraunhofer HHI, Berlin, Germany
   a. 15th June 2019
   b. Photondelta Conference: chairing technical workgroup meetings to address photonics roadmap trends and challenges.
   c. Photondelta in coordination with iNEMI, and AIM photonics.
   d. https://www.photondelta.eu

217) Reviewer: European Commission ICT-05-2019: Pilot lines (free form optics and integrated photonics for bio-medical applications
   a. 16th June 2019
   b. European Commission: Reviewing submitted technical photonics proposals for Horizon 2020, and rate proposals to EU guidelines.
   c. http://ec.europa.eu/research/participants/portal/desktop/en/opportunities/h2020

218) Invited speaker: 'Lightwave Logic polymer modulator platform' at the Spring Investor Conference, NYC, NY
   a. 2nd April 2019
   b. Spring Investor Summit (Microcap Conference) (www.springinvestorsummit.com

219) Invited video 'Lightwave Logic polymer modulator platform' at the Spring Investor Conference, NYC, NY
   a. 2nd April 2019
   b. Spring Investor Summit (Microcap Conference)
   c. https://www.youtube.com/watch?v=Mn4oICQpVTQ

220) Invited video 'Lightwave Logic advancing its silicon photonic prototypes" by Proactive, (https://www.proactiveinvestors.com)NY
   a. 2nd April 2019
   b. Proactive video (Wall St) series: https://www.youtube.com/watch?v=3B0oGXvyogA
   c. Lightwave Logic, Inc. (OTCQX: LWLG) CEO Michael Lebby tells Proactive the Englewood, Colorado-based technology platform company is in discussions with

Professor (Dr. Dr.) Michael S. Lebby, B. Eng. (Hons), MBA, Ph.D., D. Eng, Fellow NAI, IEEE, Optica (OSA); C. Eng.
1 Hawthorne St., unit 25a, San Francisco, CA 94105, USA; mobile +1 717 839 7078; drmlebby@gmail.com

large and small players within the telecommunications and data-communications space, including companies who are involved in the manufacturing routers.

221) Reviewer: (European Commission) for project InSiDe
   a. 29th Apr 2019
   b. European Commission, Brussels
   c. InSiDe is an EU project for PIC based technology in the medical field to monitor blood flow and artery stiffness in the human body using long wavelength lasers and silicon photonics. Hospital clinical trials will be conducted. It is a follow-on with more clinical trials from the initial CARDIS EU project.
   d. http://www.inside-h2020.eu

222) Invited video Interview by EPIC CTO Jose Pozo in EPIC's Photonics Industry Luminary video series.
   a. 28th Jan 2019 (at Photonics West conference in San Francisco)
   b. EPIC Trade Association, Europe
   c. https://www.youtube.com/watch?v=e_V4TeTSwaM

223) Invited video 'Global Markets and Trends' at the 3rd International Roadmap conference, Faunhofer HHI, Berlin Germany
   a. 16th June 2019
   b. PhotonDelta video PR team
   c. https://vimeo.com/341952732

224) Reviewer (European Commission) for pilot line PISCALE
   a. 11th Sept 2019
   b. European Commission, Brussels
   c. PISCALE is a pilot line that is focused on bringing to commercial market flexible organic display technologies in both panel and reel to reel formats.

225) Invited talk and abstract: ECOC International Symposium on Hybrid PICs entitled "Polymer modulators enable the next generation of speeds and low power in optical networks"
   a. 22nd Sept 2019
   b. International Symposium and workshop (WO5) on Hybrid PICs,
   c. ECOC conference 2019, Dublin, Ireland
   d. https://www.ecoc2019.org/workshop.html The talk included photonics for high performance computing, data centers, and data communications

226) Invited talk and abstract: "Polymer modulators with >50GHz performance for power consumption reduction at 400, 800, and 1600 Gbaud aggregated data-rates"
   a. 24th Sept 2019
   b. Market Focus Session, Photonics Integration and Digital Silicon Photonics,
   c. ECOC 2019, Dublin, Ireland
   d. https://www.ecocexhibition.com/visit/market-focus/market-focus-2019-timetable/

227) Video: Polymer modulators with >50GHz performance for power consumption reduction at 400, 800, and 1600 Gbaud aggregated datarates"
   a. 24th Sept 2019

Professor (Dr. Dr.) Michael S. Lebby, B. Eng. (Hons), MBA, Ph.D., D. Eng, Fellow NAI, IEEE, Optica (OSA); C. Eng.
1 Hawthorne St., unit 25a, San Francisco, CA 94105, USA; mobile +1 717 839 7078; drmlebby@gmail.com

b. ECOC, Market Focus at the ECOC Exhibit, (Youtube: Michael Lebby ECOC 2019)
c. ECOC 2019, Dublin, Ireland

228) Chairman and moderator, Market Focus ECOC 2019 session: Service and Content Provider Optical Transmission
a. 24th Sept 2019
b. Market Focus Session #5, ECOC 2019, Dublin, Ireland
c. https://www.ecocexhibition.com/visit/market-focus/market-focus-2019-timetable/

229) Chairman and moderator, Market Focus ECOC 2019 session: Optical Network Agility/Software Defined Networks
a. 24th Sept 2019
b. Market Focus Session #7, ECOC 2019, Dublin, Ireland
c. https://www.ecocexhibition.com/visit/market-focus/market-focus-2019-timetable/

230) Reviewer (European Commission) for pilot line MIPHAB
a. 10th Dec 2019
b. European Commission, Brussels
c. MIPHAB is a pilot line that is focused on bringing to commercial market near infra-red devices and packaging for industrial, defense, military and high-volume applications.

2020

231) Webinar: Wall Street resource
a. 9th Jan 2020
b. Lightwave Logic HQ facilities in Denver, Colorado
c. A 30min recorded webinar answering questions on Lightwave Logic and its business plans, technology and plans for the future.

232) Invited video Interview by EPIC in EPIC's Photonics Industry video series on European funded pilot lines.
a. 5th Feb 2020 (at Photonics West conference in San Francisco)
b. EPIC Trade Association, Europe

233) Reviewer (European Commission) for pilot line InPULSE
a. 19th Mar 2020
b. European Commission, Brussels
c. InPULSE is a pilot line that is focused on bringing to commercial market InP based photonic integrated circuits (PICs) for fiber communications, both datacom as well as telecom high-volume applications.

234) Keynote and Plenary speaker SPIE Photonics Europe International Conference
a. Originally 31st March (then moved to 7th April 2020)

Professor (Dr. Dr.) Michael S. Lebby, B. Eng. (Hons), MBA, Ph.D., D. Eng, Fellow NAI, IEEE, Optica (OSA); C. Eng.
1 Hawthorne St., unit 25a, San Francisco, CA 94105, USA; mobile +1 717 839 7078; drmlebby@gmail.com

b. Strasbourg, France (the plenary talk was completed using audio embedded powerpoint video remotely).
c. The conference was held virtually in 2020 and the talk was attended by over 1000 attendees/visits.
d. https://spie.org/profile/michael.lebby-4009?SSO=1

235) Chairman (elected) of ECOC Market Focus technical committee as part of the ECOC Exhibition.
a. 10th May 2020
b. Committee hosted and organized by ECOC Exhibition
c. Market Focus Committee at: : https://www.ecocexhibition.com/visit/market-focus/

236) Invited speaker and presentation at Lightwave Logic Annual Shareholder meetings 2020 with Business Management Update, and presentation entitled, "Lightwave logic business review"
a. 14th May 2020
b. Presentation can be found at: https://drive.google.com/file/d/1xfisLKe6QIykCAIMjOZ0XdiR-Ht_O7zZ/view?usp=sharing
c. Hosted by Lightwave Logic Inc. and MZ Group (Investor Relations)
d. Co-Chair (and summit host) of online summit for PIC International virtual session with live Q&A. The talk included photonics for high performance computing, data centers, and data communications
e. 19th May 2020
f. Hosted by Angel Tech (https://onlinesummit.angel-tech.net/breakout/pic-international)
g. Virtual conference with combination of pre-recorded presentations, live presentations, and live Q&A. Over 150 attendees.

237) Invited video clip on PIC technologies for online summit of PIC International conference.
a. 19th May 2020
b. Video clip (2:04) can be found at https://onlinesummit.angel-tech.net/breakout/pic-international
c. Summit host's introduction to the online summit PIC conference.

238) Invited speaker, EPIC 24hr Photonics World Tour virtual conference with talked entitled; "EO Polymers enable high speed and low power modulators at 1550nm and 1310nm."
a. 24th Jun 2020
b. EPIC 24hr Photonics World Tour final talk #72 and concluding remarks.
c. https://www.epic-assoc.com/24hours/ and video on Youtube at: https://www.youtube.com/watch?v=aiUSlfxP1z0 starting at 46:00

239) Invited paper/article entitled, "Electro-Optic Polymers Improve Speed and Power Efficiency" with co-authors Karen Liu and Cory Pecinovsky, Lightwave Logic Inc.
a. 5th Aug 2020

Professor (Dr. Dr.) Michael S. Lebby, B. Eng. (Hons), MBA, Ph.D., D. Eng, Fellow NAI, IEEE, Optica (OSA); C. Eng.
1 Hawthorne St., unit 25a, San Francisco, CA 94105, USA; mobile +1 717 839 7078; drmlebby@gmail.com

b. Published by Photonics Spectra magazine,
c. Hosted by photonics.com https://www.photonics.com/Articles/Electro-Optic_Polymers_Improve_Speed_and_Power/p5/vo180/i1193/a65902

240) Invited video interview, "2020 Market Focus and technology trends for ECOC 2020, Brussels, Belgium" as Chairman of ECOC 2020 Market Focus Technical Committee
a. 5th Aug 2020
b. Market Focus Exhibition for ECOC 2020,
c. Hosted by ECOC exhibition: https://www.ecocexhibition.com/visit/market-focus/

241) Chair and invited speaker, PIC International virtual conference on PICs: PIC Virtual II with presentation entitled; "Optical devices and industry roadmaps."
a. 2nd Nov 2020
b. PIC International Conference, (https://picmagazine.net/article/112351/AngelTech_Virtual_2_-_The_Sequel_Proves_A_Hit_Success) and (https://onlinesummit.angel-tech.net)

242) Invited speaker, EPIC Virtual Conference on Datacenters (in collaboration with EA and COBO) with presentation entitled; "Using polymer modulators to upgrade your PIC + Industry Roadmaps."
a. 4th Nov 2020
b. EPIC Trade Association and subsequent YouTube video (https://www.youtube.com/watch?v=tHh-z724D2g) and also at EPIC: https://www.epic-assoc.com/epic-online-technology-meeting-on-datacenter-interconnects-in-cooperation-with-cobo-and-ea/
c. Hosted by EPIC
d. Hosted by CS International and PIC International (Angel Business, London)

243) Reviewer (European Commission) for pilot line PIX4LIFE
a. 2nd Dec 2020
b. European Commission, Brussels (virtual review)
c. PIX4LIFE is a pilot line that is focused on bringing to commercial market PIC dielectric solutions for applications in the visible wavelength range in the medical applications market.

2021

244) Invited speaker, EPIC Photonics Plus conference (virtual) with a talk entitled "Polymer Plus™: Upgrading your PIC with Ultrafast and Low Power Modulators."
a. 16th Feb 2021
b. EPIC Trade Association https://photonicsplus.com and also at EPIC: https://photonicsplus.com/exhibitors/

Professor (Dr. Dr.) Michael S. Lebby, B. Eng. (Hons), MBA, Ph.D., D. Eng, Fellow NAI, IEEE, Optica (OSA); C. Eng.
1 Hawthorne St., unit 25a, San Francisco, CA 94105, USA; mobile +1 717 839 7078; drmlebby@gmail.com

c. Hosted by EPIC

245) Invited speaker (updated virtual presentation), EPIC Photonics Plus conference (virtual) with a talk entitled "Commercializing Polymer Modulators."
   a. 10th Mar 2021
   b. EPIC Trade Association https://photonicsplus.com and also at https://www.lightwavelogic.com/presentation/video-presentation-commercializing-polymer-modulators/
   c. Hosted by EPIC

246) Invited Webinar and panelist: Roth Capital Partners (https://www.roth.com/Page/Corporate-Access-Past-Conferences)
   a. 17th Mar 2021
   b. 33rd Annual Roth Conference
   c. Financial investment conference for public company review. Panelist for answering questions by bankers, investment specialists, and fund managers on Lightwave Logic and its business plans, technology and plans for the future.

247) Invited white paper/article entitled, "Polymers for Fiber Optic Communications: What does the Integrated Photonics Roadmap Say" co-authors Michael Lebby and Karen Liu, Lightwave Logic Inc.
   a. 24th Mar 2021
   b. Published by Lightwave Logic Inc., (https://www.lightwavelogic.com/wp-content/uploads/sites/319/2021/03/WP_IPSR-Roadmap-Decoded.pdf)
   c. Executive summary: The IPSR (Integrated Photonic Systems Roadmap), a recent broad collaboration that unified the efforts of multiple established photonics roadmap efforts, describes the key technology bottlenecks for a broad array of applications and most promising solutions to overcome them. This whitepaper highlights the portion of the roadmap specific to fiber optic communications and within that the implications for the role of electro-optic polymers. Key findings identify critical advances that will be needed over the next decade to support the growth of very high data rate applications. By the end of the decade, integration of electronics with photonics will be part of broad integrated platforms. Innovative materials technologies such as polymers can be useful to enhance integrated photonics platforms with the use of high- speed modulators and passive optical interconnects.

248) Reviewer (European Commission) for pilot line Phabulous
   a. 31st Mar 2021
   b. Via European Commission (virtual review)
   c. Phabulous is a pilot line that is focused on bringing to commercial market micro-optics and free-form optics technology. Focus is on SMEs, prototyping and small volume manufacturing.

249) Chair and invited speaker, PIC International virtual conference on PICs: PIC Virtual III with presentation entitled; "Integrated photonic roadmaps."
   a. 12th Apr 2021

Professor (Dr. Dr.) Michael S. Lebby, B. Eng. (Hons), MBA, Ph.D., D. Eng, Fellow NAI, IEEE, Optica (OSA); C. Eng.
1 Hawthorne St., unit 25a, San Francisco, CA 94105, USA; mobile +1 717 839 7078; drmlebby@gmail.com

b. PIC International Conference, (https://picmagazine.net/article/112351/AngelTech_Virtual_2_-_The_Sequel_Proves_A_Hit_Success) and (https://onlinesummit.angel-tech.net)
c. Hosted by CS International and PIC International (Angel Business, London)

250) Reviewer (European Commission) for pilot line InPULSE (also known as Jeppix)
a. 23rd Apr 2021
b. Via European Commission (virtual review)
c. InPULSE is a pilot line that is focused on bringing to commercial market InP based photonic integrated circuits (PICs) for fiber communications, both datacom as well as telecom high-volume applications.

251) Invited speaker, EPIC Virtual Conference on PIC Packaging with presentation entitled; "Integrated photonics roadmaps: enabling high performance packaging."
a. 26th Apr 2021
b. EPIC Trade Association and subsequent YouTube video (https://www.youtube.com/watch?v=tHh-z724D2g) and also at EPIC: https://www.epic-assoc.com/epic-online-technology-meeting-on-pic-packaging/
c. Hosted by EPIC

252) Invited conference and panelist: Oppenheimer 6th Annual Virtual Emerging Growth Conference (https://www.oppenheimer.com/events/2021/6th-annual-emerging-growth-conference.aspx)
a. 11th May 2021
b. Oppenheimer 6th Annual Virtual Emerging Growth Conference.
c. Financial investment conference for public company review. Panelist for answering questions with a variety of bankers, investment specialists, and fund managers on Lightwave Logic and its business plans, technology and plans for the future.

253) Invited speaker and presentation at Lightwave Logic Annual Shareholder meetings 2021 with Business Management Update, and presentation entitled, "Lightwave logic business review"
a. 27th May 2021
b. Presentation can be found at: https://www.lightwavelogic.com/presentation/2021-asm-business-update-por-lightwave-logic-ceo-dr-michael-lebby/
c. Hosted by Lightwave Logic Inc. and MZ Group (Investor Relations)

254) Keynote speaker for PITC opening ceremony with presentation entitled, "Photonic Integrated Circuits (PICs): Enabling our future…"
a. 2nd June 2021
b. Agenda at: https://brainporteindhoven.com/en/events/launch-photonics-integration-techology-center and presentation at: https://www.lightwavelogic.com/presentation/photonic-integration-technology-center-keynote/
c. Hosted by PITC (Photonics Integrated Technology Center); Photon Delta, TNO, Eindhoven University, Twente University.

Professor (Dr. Dr.) Michael S. Lebby, B. Eng. (Hons), MBA, Ph.D., D. Eng, Fellow NAI, IEEE, Optica (OSA); C. Eng.
1 Hawthorne St., unit 25a, San Francisco, CA 94105, USA; mobile +1 717 839 7078; drmlebby@gmail.com

255) Invited speaker: LD Micro Invitational XI conference (virtual) with presentation entitled, "Lightwave Logic Investor Presentation"
   a. 10th June 2021
   b. Presentation at: https://api.mziq.com/mzfilemanager/v2/d/307dbc8b-e212-48ba-9968-8cef3f6b5188/8c054319-48a6-bd6b-2a0c-66e56f5f489f?origin=2
   c. Hosted by LD Micro NASDAQ: SRAX

256) Invited video interview: "2021 Market Focus and technology trends for ECOC 2021, Bordeaux, France" as Chairman of ECOC 2021 Market Focus Technical Committee
   a. 15th June 2021
   b. Market Focus Exhibition for ECOC 2021,
   c. Hosted by ECOC exhibition: https://www.ecocexhibition.com/visit/market-focus/

257) Invited speaker at HC Wainwright non-deal roadshow (virtual)
   a. 3rd and 4th August 2021
   b. Presentation of "Lightwave Logic investor presentation"
   c. Hosted by HC Wainwright Investment Bank

258) Invited speaker at Q3 Investor Summit (virtual)
   a. 17th and 18th August 2021
   b. Presentation of "Lightwave Logic investor presentation" and link: https://drive.google.com/file/d/1mH0bCzOd8UxtvN6FeR50KIP7moFsFhjJ/view?usp=sharing
   c. Hosted by Investor Summit (https://investorsummitgroup.com)

259) Invited speaker and video recording at HC Wainwright conference (virtual)
   a. 13-15th September 2021
   b. Presentation of "Lightwave Logic investor presentation"
   c. Hosted by HC Wainwright Investment Bank

260) Invited speaker and video interview at NASDAQ for 10th September 2021 marketing closing. Live interview at NASDAQ HQ in Times Square, NYC.
   a. 10th September 2021
   b. Live interview for TV networks of Lightwave Logic's aspirations.
   c. Hosted by NASDAQ at their TV studios: https://www.nasdaq.com/videos/lightwave-logic-inc.-rings-the-nasdaq-stock-market-opening-bell

261) Invited interview to close the week of trading at NASDAQ on 10th September, 2021 with live speech, and televised session. The closing was carried by CNBC, FOX, Bloomberg, BNN networks during the close session.
   a. 10th September, 2021
   b. Live interview for Lightwave Logic, and live market closing for NASDAQ
   c. Hosted by NASDAQ at their TV studios: https://youtu.be/8dmHC8MeF6E
   a. https://youtu.be/8dmHC8MeF6E

262) TV and video interview by TD Ameritrade in conjunction with the ringing of the closing bell at NASDAQ on 10th September, 2021
   a. 10th September 2021

Professor (Dr. Dr.) Michael S. Lebby, B. Eng. (Hons), MBA, Ph.D., D. Eng, Fellow NAI, IEEE, Optica (OSA); C. Eng.
1 Hawthorne St., unit 25a, San Francisco, CA 94105, USA; mobile +1 717 839 7078; drmlebby@gmail.com

b. Live TV interview on TD Ameritrade at NASDAQ studios, Time Square, NYC
c. Hosted by TD Ameritrade financial network; https://tdameritradenetwork.com/video/rB4A-HvPH-2Be9Hw1tYC0w

263) Session chairman: ECOC Market Focus technical committee as part of the ECOC Exhibition: sessions included PIC and Silicon Photonics, Optics in Cloud computing, optical transmission (SDN, network agility), Fiber Access, 5G, Cable, PON, FTTX, FTTC, Fiber to the room, New technologies and optical systems, New markets, and new packaging platforms.
a. 13th September 2021
b. Committee hosted and organized by ECOC Exhibition
c. Market Focus Committee at: : https://www.ecocexhibition.com/visit/market-focus/

264) Invited video interview: "2021 Market Focus impact for ECOC 2021, Bordeaux, France" as Chairman of ECOC 2021 Market Focus Technical Committee at the conference by ECOC TV https://www.youtube.com/watch?v=VrFeSwqnWAk
a. 13th September 2021
b. Market Focus Exhibition for ECOC 2021,
c. Hosted by ECOC exhibition: https://www.ecocexhibition.com/visit/market-focus/ with video at

265) Invited talk and abstract: "Advancing integrated photonics with elector-optic polymer modulators".
a. 13th September 2021
b. Market Focus Session, PIC and SiPH/Datacenters/Optics in cloud computing, https://www.ecocexhibition.com/visit/market-focus/market-focus-2021-session-details/
c. ECOC 2021, Bordeaux, France

266) Award winner: Acceptance of glass trophy for ECOC Industry awards on behalf of Lightwave Logic in the optical integration category: https://www.ecocexhibition.com/visit/ecoc-exhibition-industry-awards/
a. 14th September 2021
b. Product Focus session, ECOC Exhibition Industry Award Winner Announcement
c. ECOC 2021, Bordeaux, France

267) Interview: ECOC Industry awards on behalf of Lightwave Logic in the optical integration category by ECOC TV
a. 14th September 2021
b. Product Focus session, ECOC Exhibition Industry Award Winner Announcement
c. ECOC 2021, Bordeaux, France

268) Video interview: PIC International Conference November 9-11, Brussels, Belgium
a. 24th September 2021
b. Overview of conference, technical sessions, and integrated photonics
c. PIC International, Brussels, Belgium as part of the online web portal presence.

Professor (Dr. Dr.) Michael S. Lebby, B. Eng. (Hons), MBA, Ph.D., D. Eng, Fellow NAI, IEEE, Optica (OSA); C. Eng.
1 Hawthorne St., unit 25a, San Francisco, CA 94105, USA; mobile +1 717 839 7078; drmlebby@gmail.com

269) Reviewer (European Commission) for pilot line Medphab
   a. 21st Sep 2021
   b. Via European Commission (virtual review) is a pilot line that is focused on bringing to commercial market silicon photonics based technologies for medical applications. Demonstrator use-cases as prototype products have been selected for the validation of the pilot line technologies covering both *in-vivo* and *in-vitro* domains. The cases include: manufacturing a disposable plasmonic-fluidic sensors and a wearable PCI temperature sensor.
   c. https://medphab.eu

270) Reviewer: (European Commission) for pilot line MIRPHAB
   a. 28th Sep 2021
   b. Via European Commission (virtual review)
   c. MIRPHAB is a pilot line that is focused on bringing to commercial market infra-red wavelength modules and technologies based on quantum cascade lasers, MIR detectors, Antimonide based compound semiconductors and their associated packaging.
   d. https://www.iaf.fraunhofer.de/en/research/research-areas/semiconductor-lasers/mirphab.html

271) Reviewer: (European Commission) for pilot line InPULSE (also known as Jeppix)
   a. 1st Oct 2021
   b. Via European Commission (virtual review)
   c. InPULSE is a pilot line that is focused on bringing to commercial market InP based photonic integrated circuits (PICs) for fiber communications, both datacom as well as telecom high-volume applications.
   d. https://www.inpulse.jeppix.eu

272) Invited Video presentation: LD Micro Main Investor conference entitled "Investor Presentation for LD Micro"
   a. 12th October 2021
   b. For virtual attendees at the LD Micro conference in Los Angeles (Luxe Hotel), California
   c. Invited video presentation for virtual audience at LD Micro main event in LA California: https://www.meetmax.com/sched/event_76871/conference_home.html
   d. https://www.youtube.com/watch?v=JEvSV8qYGMA

273) Invited audio interview: LD Micro for BIZPOD (the Drill Down by Cory Johnson).
   a. 12th October 2021
   b. Located at LD Micro main in LA, California
   c. BIZPOD audio interview as part of their start-up entrepreneur series: https://www.bizpod.net

274) Invited oral presentation: Includes Q&A for LD Micro Main Investor conference entitled "Investor Presentation for LD Micro"
   a. 12th October 2021

Professor (Dr. Dr.) Michael S. Lebby, B. Eng. (Hons), MBA, Ph.D., D. Eng, Fellow NAI, IEEE, Optica (OSA); C. Eng.
1 Hawthorne St., unit 25a, San Francisco, CA 94105, USA; mobile +1 717 839 7078; drmlebby@gmail.com

b. For live in-person attendees at the LD Micro conference in Los Angeles (Luxe Hotel), California
c. Invited live presentation on Lightwave Logic technology and business plans for virtual audience at LD Micro main event in LA California: https://www.meetmax.com/sched/event_76871/conference_home.html
d. https://www.youtube.com/watch?v=JEvSV8qYGMA and https://me21.mysequire.com/recording?session_id=d354f581-6ab6-47d9-99de-d642c1c25d87

275) Invited Video presentation: Ladenburg Thalmann Virtual Technology Expo conference entitled "Investor Presentation for Ladenburg Thalmann virtual Technology Expo Investor Presentation"
a. Video-taped on 27th October 2021 for release on 18th November 2021
b. For virtual attendees at the Thalmann Virtual Technology Expo conference.
c. Invited video presentation for virtual audience at 2021 Ladenburg Thalmann Virtual Technology Expo: https://ladenburg21.mysequire.com
d. Presentation can be found at: https://ladenburg21.mysequire.com

276) Invited video: Chairmans introduction to the 5th PIC International Conference, www.picinternational.net,
a. 7th-10th November 2021
b. Conference hosted by Angel events.
c. Sheraton Airport Hotel, Brussels, Belgium.

277) Session Chairman: 2nd PIC Pilot Line Conference, , www.picinternational.net,
a. 7th November 2021
b. Conference hosted by Angel events.
c. Sheraton Airport Hotel, Brussels, Belgium.

278) Keynote speaker: Includes presentation entitled, "PIC Pilot Lines: Competitive Positioning" as part of the of 2nd PIC Pilot Line Conference, , www.picinternational.net,
a. 7th November 2021
b. As of the conference hosted by Angel events.
c. Sheraton Airport Hotel, Brussels, Belgium.

279) Session chairman: 5th PIC International conference, www.picinternational.net
a. 8-10th November 2021
b. Conference hosted by Angel events together with CS International, SSI International, and PIC Pilot Line Conference.
c. Sheraton Airport Hotel, Brussels, Belgium.

280) Invited Panelist: For the panel entitled, "PICs for LIDAR" of 6th PIC International conference, www.picinternational.net
a. 8-10th November 2021
b. Conference hosted by Angel events together with CS International, SSI International, and PIC Pilot Line Conference.
c. Sheraton Airport Hotel, Brussels, Belgium.

Professor (Dr. Dr.) Michael S. Lebby, B. Eng. (Hons), MBA, Ph.D., D. Eng, Fellow NAI, IEEE, Optica (OSA); C. Eng.
1 Hawthorne St., unit 25a, San Francisco, CA 94105, USA; mobile +1 717 839 7078; drmlebby@gmail.com

281) Invited speaker: With presentation entitled, "Increasing power efficiency with electro-optic (EO) polymers" at the 5th PIC International conference, www.picinternational.net in the day 2 session, "PICs vision- evolution and revolution"
   a. 8-10th November 2021
   b. Conference hosted by Angel events together with CS International, SSI International, and PIC Pilot Line Conference.
   c. Sheraton Airport Hotel, Brussels, Belgium.

282) Keynote speaker: For Macrotrends (http://arnaerteconomics.com/dagvandetips2020/) investor conference (https://vimeo.com/653240070) and talk entitled "Investor Presentation'
   a. 12th November 2021
   b. Conference hosted by Marcotrends with 200 in person attendees, and 3-500 online attendees.
   c. Ghent, Belgium

283) Invited Live TV interview: Benzinga (Spencer Israel show).
   a. TV interview on 7th Dec 2021 with youtube recording: https://www.youtube.com/watch?v=kS-7FVTNE2Y
   b. Presentation can be found at: https://www.youtube.com/watch?v=kS-7FVTNE2Y and the Spencer Israel show/background at https://www.linkedin.com/in/spencer-israel-44b02b31/ and https://www.benzinga.com/author/spencer-israel

2022

284) Invited Live TV interview: Benzinga (Spencer Israel show).
   a. TV interview on 11th Feb 2022 with youtube recording: https://www.youtube.com/watch?v=jFiB9P3voUk
   b. Presentation can be found at: https://www.youtube.com/watch?v=jFiB9P3voUk and the Spencer Israel show/background at https://www.linkedin.com/in/spencer-israel-44b02b31/ and https://www.benzinga.com/author/spencer-israel

285) Invited Webinar and panelist: Roth Capital Partners at the 34th Annual Roth Dana Point Conference, (https://www.roth.com/Page/Corporate-Access-Past-Conferences) with Lightwave Logic investor presentation and meetings.
   a. 13-15th March 2022
   b. 34th Annual Roth Deer Valley Conference (invite only)
   c. Financial investment conference for public company review. Panelist for answering questions by bankers, investment specialists, and fund managers on Lightwave Logic and its business plans, technology and plans for the future.

286) Invited Article and Interview entitled: "Q&A: Electro-optic polymers herald a new age of ultra-fast communication." With Digital Journal (https://www.digitaljournal.com), and interviewer; Dr. Tim Sandle.

Professor (Dr. Dr.) Michael S. Lebby, B. Eng. (Hons), MBA, Ph.D., D. Eng, Fellow NAI, IEEE, Optica (OSA); C. Eng.
1 Hawthorne St., unit 25a, San Francisco, CA 94105, USA; mobile +1 717 839 7078; drmlebby@gmail.com

a. Digital Journal interview and publication on 1st April 2022 in the Digital Journal.
b. Article and interview can be found at: https://www.digitaljournal.com/tech-science/qa-electro-optic-polymers-herald-a-new-age-of-ultra-fast-communication/article

287) Invited Article entitled: "Electro-optic polymers allow faster, more efficient data transmission." With Broadband Communities (https://www.bbcmag.com)
a. Published in Broadband Communities 13th April 2022.
b. Article can be found at: https://www.bbcmag.com/pub/doc/BBC_Mar22_webFINAL.pdf

288) Invited video: Chairmans introduction to the 6th PIC International Conference, www.picinternational.net, recorded on 10th May 2022.
a. 8th May 2022 to be published in May 2022 for the conference being held on 27-29th June 2022
b. Conference hosted by Angel events.
c. Sheraton Airport Hotel, Brussels, Belgium.

289) Invited speaker at Oppenheimer 7th Annual Emerging Growth Conference (virtual)
a. 10th May 2022
b. Presentation of "Lightwave Logic investor presentation"
c. Hosted by Oppenheimer Investment Bank: https://www.meetmax.com/sched/event_80933/conference_invlogin.html?event_id=80933&username=LWLG&confirmation_number=MVRJ8BYW865 and https://www.oppenheimer.com/events/2022/7th-annual-emerging-growth-conference.aspx

290) Invited interview: Authority Magazine: "The future of communication technology"
a. 11th May 2022, and published 18th May 2022.
b. Interview on the future of communications, hosted by https://medium.com/authority-magazine
c. Interview with David Liu, Authority Magazine

291) Reviewer (European Commission) for pilot line InPULSE (also known as Jeppix)
a. 17th May 2022
b. Via European Commission (virtual review)
c. InPULSE is a pilot line that is focused on bringing to commercial market InP based photonic integrated circuits (PICs) for fiber communications, both datacom as well as telecom high-volume applications.

292) Invited speaker and presentation at Lightwave Logic Annual Shareholder meetings 2022 with Business Management Update, and presentation entitled, "Lightwave logic CEO management review"
a. 26th May 2022
b. Presentation can be found at: https://www.lightwavelogic.com/presentation/2021-asm-business-update-por-lightwave-logic-ceo-dr-michael-lebby/ and stream-

Professor (Dr. Dr.) Michael S. Lebby, B. Eng. (Hons), MBA, Ph.D., D. Eng, Fellow NAI, IEEE, Optica (OSA); C. Eng.
1 Hawthorne St., unit 25a, San Francisco, CA 94105, USA; mobile +1 717 839 7078; drmlebby@gmail.com

video
at: https://viavid.webcasts.com/starthere.jsp?ei=1544482&tp_key=3c8d96d340

c. Hosted by Lightwave Logic Inc. and MZ Group (Investor Relations)

293) Invited oral presentation: LD Micro 12th Annual LD Micro Invitational conference with presentation entitled, "Lightwave Logic"
   a. 7th June 2022
   b. Presentation Webcast can be found at: https://me21.mysequire.com/
   c. Hosted by LD Micro NASDAQ: SRAX and located at Four Seasons in Westlake Village, California on 7-8th June 2022.

294) Invited video presentation: LD Micro XII Annual Invitational conference, recorded on 25th May 2022 (https://ldinv12.sequireevents.com)
   a. 7th June 2022
   b. Presentation at: : https://me21.mysequire.com/
   c. Hosted by LD Micro NASDAQ: SRAX at the Four Seasons in Westlake Village, California on 7-8th June 2022.

295) Invited speaker and presentation at MIT IPSRI roadmap event with presentation entitled "Transceiver roadmap 2022".
   a. 10th June 2022
   b. Presentation can be found at: https://photonicsmanufacturing.org/how-get-involved
   c. and https://www.eventbrite.com/e/2022-spring-ipsr-i-roadmap-meeting-tickets-323380047427
   d. Hosted by IPRSI, MIT, and PhotonDelta world photonics roadmap

296) Board member Optica's Corporate Engagement Council, with activities focusing on industrial membership, marketing, conferences, workshops, meetings etc., for the photonics community globally.
   a. 10th June 2022, election to the CEC (https://www.optica.org/en-us/about/leadership_and_volunteers/councils/councils/
   b. CEC listing: https://www.optica.org/en-us/about/leadership_and_volunteers/councils/councils/#Industry
   c. Optica (Optical Society of America – previous name)

297) Reviewer: European Commission HORIZON-CL4-2022-DIGITAL-EMERGING-01-38 (CSA): International cooperation in semiconductors
   a. 8th June 2022
   b. European Commission: Reviewing submitted technical and coordinated support actions for electronics and photonics proposals for Horizon 2022 evaluation calls and rate proposals to EU guidelines.
   c. CSA:http://ec.europa.eu/research/participants/portal/desktop/en/opportunities/h2020

298) Reviewer: European Commission HORIZON-CL4-2022-DIGITAL-EMERGING-01-03: Advanced multi-sensing systems.
   a. 10th June 2022

Professor (Dr. Dr.) Michael S. Lebby, B. Eng. (Hons), MBA, Ph.D., D. Eng, Fellow NAI, IEEE, Optica (OSA); C. Eng.
1 Hawthorne St., unit 25a, San Francisco, CA 94105, USA; mobile +1 717 839 7078; drmlebby@gmail.com

b. European Commission: Reviewing submitted technical photonics proposals for Horizon 2022 evaluation calls and rate proposals to EU guidelines.
c. RIA:http://ec.europa.eu/research/participants/portal/desktop/en/opportunities/h2020

299) Invited live interview with Dan Loney, Wharton Business Daily Radio Station
a. 15th June 2022
b. Wharton Business Daily live radio interview. Subject: Lightwave Logic business and technology plans for growth: https://twitter.com/whartonbizdaily?lang=en
c. Location: virtual recording at Lightwave Logic, Englewood, CO.

300) Invited speaker at Diamond Equity Research Emerging Growth Invitational Conference (virtual)
a. 17th June 2022
b. Presentation of "Lightwave Logic investor presentation"
c. Hosted by Diamond Equity Research Bank: https://www.diamondequityresearch.com/conferences/ at Lightwave Logic, Englewood, Colorado.

301) Invited video interview: "2022 Market Focus impact for ECOC 2022, Basel, Switzerland" as Chairman of ECOC 2022 Market Focus Technical Committee at the conference by ECOC TV (link to be published)
a. 17th June 2022
b. Market Focus Exhibition, technical sessions and awards for ECOC 2022,
c. Hosted by ECOC exhibition: https://www.ecocexhibition.com/ecoc-exhibition-2022/ and recorded virtually in San Francisco, CA.

302) Invited interview: MicrocapDaily: "Microcapdaily Interviews Dr. Michael Lebby CEO of Lightwave Logic, Inc. (NASDAQ: LWLG) On Radical Innovation Needed to Keep the Internet Growing"
a. 23rd June 2022
b. Interview on the radical innovation needed for the internet and optical networking, hosted by https://microcapdaily.com/microcapdaily-interviews-dr-michael-lebby-ceo-of-lightwave-logic-inc-nasdaq-lwlg-on-radical-innovation-needed-to-keep-the-internet-growing-2/
c. Interview with Boe Rimes, Microcap Daily

303) Session chairman: 7th PIC International conference, www.picinternational.net
a. 28-29th June 2022
b. Conference hosted by Angel events together with CS International and SSI International.
c. Sheraton Airport Hotel, Brussels, Belgium.

304) Invited Panelist: For the panel entitled, "Optica Industry Panel: Hybrid Integration" of 6th PIC International conference, www.picinternational.net
a. 28-29th June 2022
b. Conference hosted by Angel events together with CS International, and SSI International.
c. Sheraton Airport Hotel, Brussels, Belgium.

Professor (Dr. Dr.) Michael S. Lebby, B. Eng. (Hons), MBA, Ph.D., D. Eng, Fellow NAI, IEEE, Optica (OSA); C. Eng.
1 Hawthorne St., unit 25a, San Francisco, CA 94105, USA; mobile +1 717 839 7078; drmlebby@gmail.com

305) Invited speaker: With presentation entitled, "Enabling low power consumption optical networking using high speed, low power polymer modulators" at the 6th PIC International conference, www.picinternational.net in the day 2 session, "Optimizing the PIC architecture"
   a. 28-29th June 2022
   b. Conference hosted by Angel events together with CS International, and SSI International.
   c. Sheraton Airport Hotel, Brussels, Belgium.

306) Invited speaker: "Status of Lightwave Logic and electro-optic polymers" at the Cleydael Golf Club, Antwerp, Belgium (www.cleydael.be)
   a. 30th June 2022
   b. Meeting organized by Belgium and Dutch retail investors of Lightwave Logic Inc. (NASDAQ:LWLG)
   c. Location: Belgium

307) Invited Article for 7th PIC conference entitled, "PIC International proved to be a fantastic success" (https://angel-tech.net/marketing/2022/mailers/post-show/pic/)
   a. 7th July 2022
   b. Conference hosted by Angel events together with CS International, and SSI International.
   c. Sheraton Airport Hotel, Brussels, Belgium.

308) Invited Live TV interview: Benzinga All Access Fireside Chat (Zunaid Suleman show).
   a. TV interview on 22nd July 2022 with youtube recording: https://www.youtube.com/watch?v=TyKY9R8WT_U
   b. Video interview can be found at: https://www.benzinga.com/markets/emerging-markets/22/07/28231018/lightwave-logic-the-company-with-a-proprietary-solution-to-make-transmitting-data-faster and the Zunaid Suleman show/background at https://www.benzinga.com/events/speakers/zunaid-suleman/
   c. Location: Virtually recorded in Washington DC

309) Invited Live TV interview with SNN network show Planet MicroCap Podcast and host Robert Kraft: https://www.youtube.com/watch?v=zCD-hTKtkLg
   a. 22nd July 2022
   b. Hosted by SNN and Robert Kraft, and video interview can be found at: https://podcasts.apple.com/us/podcast/lightwave-logic-nasdaq-lwlg-designing-modulators-that/id1024217659?i=1000574742796
   c. Location: Virtually recorded in Washington DC

310) Invited Live Radio interview with Bloomberg markets radio show and hosts Paul Sweeney and Matt Miller. Topic, "Lightwave Logic background, radical innovation, business plans, impact on the internet, and where will the industry go in 5years?" Link to radio interview: "Efficient Data Transmission (Audio)."
   a. 9th August 2022
   b. Hosted by Paul Sweeney and Matt Miller at Bloomberg Market Radio show https://www.bloombergradio.com/shows/bloomberg-markets-am/

Professor (Dr. Dr.) Michael S. Lebby, B. Eng. (Hons), MBA, Ph.D., D. Eng, Fellow NAI, IEEE, Optica (OSA); C. Eng.
1 Hawthorne St., unit 25a, San Francisco, CA 94105, USA; mobile +1 717 839 7078; drmlebby@gmail.com

c. Location: recorded at Lightwave Logic, Englewood, Colorado.

311) Invited video interview with Smart Photonics' "50 Leaders of change" to address where the internet is going from a technology, photonics, and optical networking system perspective. Filmed by London based TBD Media and can be found at: https://vimeo.com/tbdmediagroup/review/742996199/8dc9821c7a. with interview at 3:00-50.
   a. 10th August 2022
   b. Hosted and videoed by TBD Media hub on Bloomberg.com
   c. Location: Filmed at Lightwave Logic HQ in Englewood, Colorado and released on 9th November 2022.

312) Invited talk: Jefferies Semiconductors, IT Hardware & Communications Infrastructure Summit
   a. 29-31st August 2022
   b. Hosted by Jefferies Investment Banking
   c. Sofitel Hotel, Chicago, Illinois

313) Invited lecture – TU/e (University of Eindhoven, Netherlands); Electrical Engineering (Photonics); "Polymer Modulators"
   a. 2nd September 2022
   b. Hosted by Photonics Integrated Circuits team, Electrical Engineering, TU/e
   c. TU/e (Eindhoven University), Eindhoven, Netherlands

314) Invited review PhD thesis and defense that included review of thesis, public questions for the candidate and ceremonial procession. Amir Abbas Kashi's thesis is entitled, "Electro-optic slot waveguide phase modulators on the InP membrane on silicon platform"
   a. 2nd September 2022
   b. Hosted by TU/e Electrical Engineering, integrated photonics department with co-reviewers including: Prof. J. Leuthold, Prof. K. Williams, and Prof Van der tol.
   c. TU/e (Eindhoven University), Eindhoven, Netherlands

315) Invited keynote talk as part of the 'New Materials in PICs' at "EPIC meeting on CMOS compatible integrated photonics at IMEC." With link to website: https://epic-assoc.com/events/epic-meeting-on-cmos-compatible-integrated-photonics-at-imec/
   a. 7-8th September 2022 with the talk on the 8th September 2022
   b. Hosted by IMEC and EPIC photonics association. With EPIC photonics at: https://epic-assoc.com
   c. Location at Leuven, Belgium at IMEC 1 foundry.

316) Invited speaker: "Status of Lightwave Logic and electro-optic polymers for foundry applications" at the Cleydael Golf Club, Antwerp, Belgium (www.cleydael.be)
   a. 8th September 2022
   b. Meeting organized by Belgium and Dutch retail investors of Lightwave Logic Inc. (NASDAQ:LWLG)
   c. Location: Belgium

317) Invited talk at HW Wainwright conference called: 'H.C. Wainwright 24th Annual Global Investment Conference', with a talk entitled, "Lightwave Logic Investor

Professor (Dr. Dr.) Michael S. Lebby, B. Eng. (Hons), MBA, Ph.D., D. Eng, Fellow NAI, IEEE, Optica (OSA); C. Eng.
1 Hawthorne St., unit 25a, San Francisco, CA 94105, USA; mobile +1 717 839 7078; drmlebby@gmail.com

Presentation" and link to website: https://journey.ct.events/hub/660eb381-b261-4d25-afae-35b654ed04c1 and https://hcwco.com

a. 12 and 13th September 2022 (talk on 13th September 2022)
b. Meeting organized by HC Wainwright Investment Banking (https://hcwco.com)
c. Location: Lotte Palace Hotel, New York City, NY

318) Invited interview: Interviewed by Greg Bryan at Telegeography (https://www2.telegeography.com) Podcast which can be found at: https://telegeography.podbean.com/ as well as https://blog.telegeography.com/simply-illuminating-considering-the-future-of-optical-transport

a. 16th September 2022
b. Published by Telegeography Podcast and Greg Bryan on 27th September 2022
c. Virtual interview

319) Invited review article: Subject was for EPIC on their CMOS-foundry workshop : https://epic-assoc.com/events/epic-meeting-on-cmos-compatible-integrated-photonics-at-imec/

a. 13th September 2022
b. Published by EPIC photonics association and associated media outlets
c. Review written in NYC, 13th September 2022

320) Invited article: Ping! Zine technology insights and can be found at: https://www.pingzine.com/featured-article/the-radical-innovation-of-a-new-polymer-internet/

a. 29th September 2022
b. Published by Ping! Zine technology insights on 29th September 2022
c. Ping! Zine publishes in-depth content through authoritative contribution and thorough interviews with technology subject matter experts across multiple disciplines including cloud, data center, AI, big data, cybersecurity and more.

321) Session chairman: ECOC Market Focus technical committee as part of the ECOC Exhibition: sessions included PIC and Silicon Photonics, Optics in Cloud computing, optical transmission (SDN, network agility), Fiber Access, 5G, Cable, PON, FTTX, FTTC, Fiber to the room, new technologies and optical systems, new markets, and new packaging platforms.

a. 19-21st September 2022
b. Committee hosted and organized by ECOC Exhibition
c. Market Focus Committee at: : https://www.ecocexhibition.com/visit/market-focus/

322) Invited video interview: "2022 Market Focus impact for ECOC 2022, Basel, Switzerland," as Chairman of ECOC 2022 Market Focus Technical Committee at the conference by ECOC TV https://youtu.be/X8iQoB4vqaA

a. 20th September 2022
b. Market Focus Exhibition for ECOC 2022,
c. Hosted by ECOC exhibition: https://www.ecocexhibition.com/visit/market-focus/

323) Invited talk and abstract: "Utilizing foundries to scale hybrid electro-optic polymer modulators" with Dr. John Zyskind, VP Engineering, Lightwave Logic

Professor (Dr. Dr.) Michael S. Lebby, B. Eng. (Hons), MBA, Ph.D., D. Eng, Fellow NAI, IEEE, Optica (OSA); C. Eng.
1 Hawthorne St., unit 25a, San Francisco, CA 94105, USA; mobile +1 717 839 7078; drmlebby@gmail.com

Inc: https://www.ecocexhibition.com/visit/market-focus/components-ics-pics-fiber/

a. 19th September 2022
b. Market Focus Session, PIC components https://www.ecocexhibition.com/visit/market-focus/market-focus-timetable-2022/
c. ECOC 2022, Basel, Switzerland

324) Interview, industry award chairman, and award presentation to Market Focus Industry Award winners: ECOC exhibition industry awards (in conjunction with optical connections magazine) https://www.ecocexhibition.com/visit/ecoc-exhibition-industry-awards/ :

a. 20th September 2022
b. Product Focus session, ECOC Exhibition Industry Award Winner Announcement
c. ECOC 2022, Basel, Switzerland

325) Market Focus Interview: ECOC TV on behalf of Lightwave Logic in the optical integration category by ECOC TV and can be found at: https://youtu.be/nRd3dYCozUM

a. 21st September 2022
b. Market Focus Session, PIC components https://www.ecocexhibition.com/visit/market-focus/market-focus-timetable-2022/
c. ECOC 2022, Basel, Switzerland

326) Invited talk and panelist for ECOC Rump session, with talk entitled, "Hybrid Integration Roadmap: From pilot production to production in a semiconductor fab" at ECOC technical conference, chaired by Dr Jose Pozo, CTO Optica.

a. 21st September 2022
b. ECOC Rump session
c. ECOC 2022, Basel, Switzerland

327) Paper (co-author): Post-deadline submission to ECOC 2022 entitled, "Thermally Stable Silicon-Organic Hybrid (SOH) Mach-Zehnder Modulator for 140 GBd PAM4 Transmission With Sub-1 v Drive Signals (Th3B.2) given by Carsten Eschenbaum, *Karlsruhe Inst Tech (KIT)* and SilOriX Gmbh.

a. 22nd September 2022
b. ECOC Post Deadline session 1; 13:42 to 13:54pm https://www.optica.org/events/topical_meetings/ecoc/schedule/?day=Thursday#Th3B.2
c. ECOC 2022, Basel, Switzerland

328) Cited Acknowledgement for Post Deadline Paper: Post-deadline submission to ECOC 2022 entitled, ">500 GHz Bandwidth Graphene Photodetector Enabling Highest-Capacity Plasmonic-to-Plasmonic Links (Th3B.5) given by Stefan Koepfli, *Eidgenossische Technische Hochschule (ETH) Zurich*.

a. 22nd September 2022
b. ECOC Post Deadline session 1; 14:18 to 14:30pm https://www.optica.org/events/topical_meetings/ecoc/schedule/?day=Thursday#Th3B.5

Professor (Dr. Dr.) Michael S. Lebby, B. Eng. (Hons), MBA, Ph.D., D. Eng, Fellow NAI, IEEE, Optica (OSA); C. Eng.
1 Hawthorne St., unit 25a, San Francisco, CA 94105, USA; mobile +1 717 839 7078; drmlebby@gmail.com

c. ECOC 2022, Basel, Switzerland

329) Invited presentation: Diamond Equity Research's annual Spotlight Emerging Growth Invitational Virtual Investor Conference, with a presentation entitled, "Lightwave Logic Investor Presentation" and can be found at https://us02web.zoom.us/webinar/register/WN_2aoRT-XPSZiCFd1cLkVrXA and https://finance.yahoo.com/news/diamond-equity-research-host-spotlight-113000297.html

a. 4th October 2022 (10:20-10:50am East coast time)
b. Diamond Equity Research's Spotlight Emerging Growth Invitational Virtual Investor Conference, conferences@diamondequityresearch.com
c. Recorded 30th September 2022 virtually at LWLG.

330) Project advisor and panelist: European Commission PhotonHub EU project number/grant agreement 101016665 for 1st review meeting (virtual). Project call DT-ICT-04-2020 - Photonics Innovation Hubs

a. 6th October 2022
b. European Commission: https://www.photonhub.eu and https://cordis.europa.eu/project/id/101016665
c. PhotonHub: PhotonHub Europe is a unique European full-service one-stop-shop Photonics Innovation Hub to advance EU competitiveness.

331) Invited interview: Interviewed by Cory Johnson at The Drill Down podcast (https://twitter.com/drilldownpod?lang=en) Podcast which can be found at: https://www.iheart.com/podcast/269-the-drill-down-81530167/as well as https://twitter.com/DrillDownPod/status/1449964020522360836

a. 7th October 2022
b. Published by The Drill Down Podcast and Cory Johnson on 17th October 2022
c. Virtual interview

332) Invited oral presentation: LD Micro Main Event XV conference with presentation entitled, "Lightwave Logic Update"

a. 25th October 2022
b. Oral presentation details can be found at: https://www.meetmax.com/sched/event_86249/conference_home.html as well as https://www.meetmax.com/sched/event_86249/conference_presentations.html?bank_access=0&event_id=86249
c. Hosted by LD Micro NASDAQ: SRAX

333) Invited video presentation: LD Micro Main Event XV conference, recorded on 25th October 2022

a. 25th October 2022
b. Presentation at: https://www.meetmax.com/sched/event_86249/conference_presentations.html?bank_access=0&event_id=86249
c. Hosted by LD Micro NASDAQ: SRAX at the Luxe Sunset Boulevard Hotel LA 24-26th October 2022

Professor (Dr. Dr.) Michael S. Lebby, B. Eng. (Hons), MBA, Ph.D., D. Eng, Fellow NAI, IEEE, Optica (OSA); C. Eng.
1 Hawthorne St., unit 25a, San Francisco, CA 94105, USA; mobile +1 717 839 7078; drmlebby@gmail.com

334) Invited closing comments: Optica Co-packaged and pluggable optics industry summit. Comments were on pluggables vs co-packaged integrated photonics solutions, roadmapping, and transceiver trends on data rate and low power consumption.
   a. 25th and 26th October 2022
   b. Details on the event can be found at: https://www.optica.org/en-us/events/industry_events/2022_optica_industry_summit/
   c. Hosted by Optica (formally OSA) https://www.optica.org/en-us/home/ at Du Pont's innovation laboratories Sunnyvale, CA.

335) Invited speaker: Photonics Spectra Annual Conference with presentation entitled, "How electro-optic polymers boost PIC speed and power efficiency".
   a. Recorded on 28th October 2022, for 9-11th January 2023
   b. Details on the event can be found at: https://www.photonics.com/Advertise/MarketingBlog.aspx?AID=68312
   c. Hosted by Photonics Spectra (www.photonics.com)

336) Invited talk at the Board meeting of Optica's Corporate Engagement Council. Presentation on focusing to increase industrial membership, improve marketing, optimize conferences and workshops for the industrial photonics community globally.((https://www.optica.org/en-us/about/leadership_and_volunteers/councils/councils/
   a. 1st November 2022,
   b. CEC listing: https://www.optica.org/en-us/about/leadership_and_volunteers/councils/councils/#Industry
   c. Optica (Optical Society of America – previous name)

337) Invited interview with Laser Focus editor Peter Fretty, Editor in Chief of LASER FOCUS WORLD, on the subject of Lightwave Logic, and the radical innovation needed by the optical network and internet.
   a. 3rd November 2022,
   b. Laser Focus world can be found at: https://www.laserfocusworld.com and the magazine at: https://www.laserfocusworld.com/magazine
   c. Laser Focus World

338) Invited panel moderator at PIC Summit Conference, Eindhoven, Netherlands in conjunction with IPSR-I workshops. Panel entitled, "Heterogeneous Intergration: Electronics and Photonics united" with companies that included: IMEC, LionX, VTT, Ligentec, Corning, Smart Photonics, Fraunhofer HHI
   a. 7th November 2022
   b. PIC Summit Europe conference. https://www.picsummiteurope.com/program/
   c. Located at the High Tech Center, Eindhoven, Netherlands

339) Invited speaker at PIC Summit Conference, Eindhoven, Netherlands in conjunction with IPSR conference to summarize panel findings and discussion with audience.
   a. 7th November 2022
   b. PIC Summit Europe conference. https://www.picsummiteurope.com/program/
   c. Located at the High Tech Center, Eindhoven, Netherlands

Professor (Dr. Dr.) Michael S. Lebby, B. Eng. (Hons), MBA, Ph.D., D. Eng, Fellow NAI, IEEE, Optica (OSA); C. Eng.
1 Hawthorne St., unit 25a, San Francisco, CA 94105, USA; mobile +1 717 839 7078; drmlebby@gmail.com

340) Invited Speaker and chair of datacom group at the PIC Summit Europe Conference and IPSR-I workshops with sessions entitled, 'Paving the way to killer applications in 2035.'located at TU/e Eindhoven University, Netherlands. Workshop 1c: Datacom roadmap for 2023.
   a. 8th November 2022
   b. PIC Summit Europe conference and IPSR-I roadmap workshops. https://www.picsummiteurope.com/program/
   c. Located at the TU/e Eindhoven University, Netherlands.

341) Invited talk: IEEE IPC (Integrated Photonics Conference) https://ieee-ipc.org/industry-day/ as part of the conference https://ieee-ipc.org in the session Industry Day-Hot topics in industry. Talk entitled: "Enabling More Efficient Optical Networking using Ultra-high Speed, Ultra-low Power, Ultra-small Foundry based Polymer Modulators"
   a. 14th November 2022
   b. IEEE IPC IEEE IPC (Integrated Photonics Conference) https://ieee-ipc.org
   c. Located at the Hyatt Regency, Vancouver, BC, Canada.

342) Invited talk and panelist: IEEE IPC (Integrated Photonics Conference) https://ieee-ipc.org/industry-day/ as part of the conference https://ieee-ipc.org in the session Roundtable on Topics in Entrepreneurship. Talk entitled: "Entrepreneur or Intrapreneur" with company CEOs that included: OEwaves, Polariton, Freedom Photonics/Luminar, Aeponyx, Octane Wireless.
   a. 14th November 2022
   b. IEEE IPC IEEE IPC (Integrated Photonics Conference) https://ieee-ipc.org
   c. Located at the Hyatt Regency, Vancouver, BC, Canada.

343) Invited Video presentation: Ladenburg Thalmann Virtual Technology Expo conference 2022 entitled "Investor Presentation for Ladenburg Thalmann virtual Technology Expo Investor Presentation"
   a. Video-taped on 29th November 2022 for release on 7th December 2022
   b. For virtual attendees at the Thalmann Virtual Technology Expo conference 2022.
   c. Invited video presentation for virtual audience at 2022 Ladenburg Thalmann Virtual Technology Expo: https://ladenburgtech22.sequireevents.com/
   d. Presentation can be found at: https://ladenburgtech22.sequireevents.com/

344) Invited panelist: Photonics Spectra panel (virtual and recorded) titled, "Scaling PIC-based applications to volume production." Panelists included representatives from Sicoya, Polariton, and Ligentec, and hosted by Dr. Jose Pozo, CTO Optica.
   a. Recorded on 6th December 2022, for release 9-11th January 2023 (https://events.photonics.com/Event.aspx?EID=9&OC=EM)
   b. Details on the event can be found at: https://www.photonics.com/Advertise/MarketingBlog.aspx?AID=68312
   c. Hosted by Photonics Spectra (www.photonics.com)

345) Invited speaker at PhotonDelta's Delta Dialogues virtual interview entitled, "Heterogeneous Integration for PICs" on the summary and findings of PIC Summit

Professor (Dr. Dr.) Michael S. Lebby, B. Eng. (Hons), MBA, Ph.D., D. Eng, Fellow NAI, IEEE, Optica (OSA); C. Eng.
1 Hawthorne St., unit 25a, San Francisco, CA 94105, USA; mobile +1 717 839 7078; drmlebby@gmail.com

Europe conference on Heterogeneous Integration that took place in November 2022. The session was chaired by Jorn Smeets, PhotonDelta.

a. 7th December, 2022
b. Details of the event can be found at www.photondelta.com and https://www.photondelta.com/events/ and https://www.photondelta.com/events/delta-dialogues-december-2022/
c. Hosted by PhotonDelta www.photondelta.com

346) Invited Panelist: Ladenburg Thalmann Virtual Technology Expo conference and presentation can be found at: https://ladenburgtech22.sequireevents.com/

a. 7th December 2022
b. For virtual attendees at the Thalmann Virtual Technology Expo conference 2022.
c. Invited investor presentation at 2022 Ladenburg Thalmann Virtual Technology Expo: https://ladenburgtech22.sequireevents.com/

347) Invited Webinar and panelist: Roth Capital Partners at the 11th Annual Roth Deer Valley Conference, (https://www.roth.com/Page/Corporate-Access-Past-Conferences) with Lightwave Logic investor presentation and meetings.

a. 14-16th December 2022
b. 11th Annual Roth Deer Valley Conference
c. Financial investment conference for public company review. Panelist for answering questions by bankers, investment specialists, and fund managers on Lightwave Logic and its business plans, technology and plans for the future.

348) Invited reviewer for European Commission program as part of the IPCEI (Important Project of Common European Interest) program on electronics and photonics.

a. Duration of review process Jun 2022 to Dec 2022
b. IPCEI (Important Project of Common European Interest) based on public funding.
c. IPCEIs are projects by the EU commission that have the potential to make important contributions to sustainable economic growth, jobs, competitiveness and resilience for industry and the economy in the Union as well as strengthen its open strategic autonomy, by enabling breakthrough innovation and infrastructure projects through cross-border cooperation and with positive spill-over effects on the internal market and the society as a whole. In particular, semiconductor power FETs, laser diodes, amplifiers, FET technologies using both compound semiconductors (GaAs, GaN, InP) as well as silicon semiconductors (Silicon, SiGe) were reviewed.

2023

349) Reviewer: (European Commission) for project InSiDe

a. 24th Jan 2023
b. Located at IMEC Ghent University facility, Ghent, Belgium
c. InSiDe is an EU project for PIC based technology in the medical field to monitor blood flow and artery stiffness in the human body using long wavelength lasers

Professor (Dr. Dr.) Michael S. Lebby, B. Eng. (Hons), MBA, Ph.D., D. Eng, Fellow NAI, IEEE, Optica (OSA); C. Eng.
1 Hawthorne St., unit 25a, San Francisco, CA 94105, USA; mobile +1 717 839 7078; drmlebby@gmail.com

and silicon photonics. Hospital clinical trials will be conducted. It is a follow-on with more clinical trials from an initial CARDIS EU project.

d. http://www.inside-h2020.eu

350) Invited speaker and panelist for Laser Focus World Executive Forum (https://www.laserfocusworld.com/executive-forum) in San Francisco with talk entitled. "Hybrid integration with electro-optic polymers" and panel session entitled, "Enabling silicon photonics success"

a. 30th January 2023
b. Details of the event can be found at https://www.laserfocusworld.com/executive-forum and agenda at https://www.lfwexecutiveforum.com
c. Panelists included: Jose Pozo, CTO Optica, David Piehler, Dell Technologies, Peter Winzer, Nubis Communications, Robert Blum, Intel

351) Interview with Benjamin Glick of Mergermarket magazine entitled, "Lightwave could acquire more assets ahead of commercialization—CEO"

a. 3rd February 2023
b. Details of the interview can be found at: https://community.ionanalytics.com/lightwave-could-acquire-more-assets-ahead-of-commercialization-ceo
c. Video interview remotely from Lightwave Logic HQ in Englewood, Colorado.

352) Interview and podcast with Don Witt of Telecom Reseller's Channel Daily News for a podcast on Lightwave Logic: Background, radical innovation, technology, acquisitions, world record results, goals, and the future of optical networking in a decade. Podcast can be found at https://telecomreseller.com/2023/02/14/lightwave-logic-technology-enables-the-existing-fiber-internet-infrastructure-to-perform-3-times-faster-than-current-speeds-podcast/

a. 8th February 2023 (interview) and published 14th February 2023
b. Details can be found at: https://telecomreseller.com/category/channel-daily-news/
c. Podcast is with Telecom Reseller which provides information on voice mail, audio/video conferencing and peripherals, association and industry news, services, applications, and related topics of daily importance to telecommunications professionals.

353) Invited Article entitled: "The Internet Is the Brick Wall Nostradamus Didn't See Coming" with sub-heading, "The road maps Lightwave Logic is creating for the future of photonics will guide people toward the focus areas and the technology challenges they can expect as performance demands increase." For the industry trends section of BBC magazine (Broadband Communities) at (https://www.bbcmag.com)

a. Published in Broadband Communities 14th February 2023.
b. Article can be found at: https://www.bbcmag.com/pub/doc/BBC_Jan23_BrickWall.pdf

354) Interview with AlphaStreet entitled, "Lightwave Logic will license technology to make its polymers ubiquitous: CEO Dr. Michael Lebby" Interview can be found at

Professor (Dr. Dr.) Michael S. Lebby, B. Eng. (Hons), MBA, Ph.D., D. Eng, Fellow NAI, IEEE, Optica (OSA); C. Eng.
1 Hawthorne St., unit 25a, San Francisco, CA 94105, USA; mobile +1 717 839 7078; drmlebby@gmail.com

https://news.alphastreet.com/lightwave-logic-will-license-technology-to-make-its-polymers-ubiquitous-ceo-dr-michael-lebby/

a. 6th March 2023 (interview) and published 10th March 2023
b. Details can be found at: https://news.alphastreet.com/lightwave-logic-will-license-technology-to-make-its-polymers-ubiquitous-ceo-dr-michael-lebby/
c. Interview is with AlphaStreet which provides financial information on companies and utilize NLP and AI techniques in the research industry.

355) Invited speaker: Roth Capital Partners 35th Annual Roth Conference (https://www.roth.com/Page/Corporate-Access-Past-Conferences)

a. 13th Mar 2023
b. 35th Annual Roth Conference (www.roth.com/oc2023)
c. Financial investment conference for public company review. Panelist for answering questions by bankers, investment specialists, and fund managers on Lightwave Logic and its business plans, technology and plans for the future.

356) Interview with Laser Focus by Jose Pozo as part of his Industry Executive interviews for the photonics industry. Key topics included intrapreneur and entrepreneur experience, Lightwave Logic, photonics experience, OIDA, roadmapping, and key drivers for a career in photonics integration Interview can be found at: https://www.laserfocusworld.com/fiber-optics/article/14293915/how-thinking-ahead-shaped-the-fiberoptics-industry

a. 16th March 2023 (interview) and published 17th May 2023
b. Details can be found at: https://www.laserfocusworld.com
c. Interview is with Laser Focus World which was originally published in 1965, as *Laser Focus World*—a monthly magazine for engineers, researchers, scientists, and technical professionals—provides comprehensive global coverage of optoelectronic technologies, applications, and markets. Nearly 70,000 qualified optoelectronics professionals from around the world currently subscribe.

357) Interview with IDC by Brandon Hoff on Lightwave Logic, background, radical innovation, proprietary electro-optic polymer technology, goals and why the company is planning on making polymers ubiquitous for the hyper-scaler, datacenter markets.

a. 16th March 2023 (interview)
b. Details can be found at: https://www.idc.com
c. Interview is with IDC which provides market and financial information on the information technology and optical networking industry.

358) Invited article for ISE entitled " Proactive Powering Problem-Solving with Polymers" https://www.isemag.com/fttx-optical-networks/article/14290981/proactive-powering-problemsolving-with-polymers

a. 16th March 2023
b. Details can be found at: https://www.isemag.com
c. ISE has articles on IT solutions and education.

359) Invited article and interview (from panel discussion) at Laser Focus World Executive Forum (https://www.laserfocusworld.com/executive-forum) in San Francisco with article entitled, "Silicon photonics: Is it witchcraft?

Professor (Dr. Dr.) Michael S. Lebby, B. Eng. (Hons), MBA, Ph.D., D. Eng, Fellow NAI, IEEE, Optica (OSA); C. Eng.
1 Hawthorne St., unit 25a, San Francisco, CA 94105, USA; mobile +1 717 839 7078; drmlebby@gmail.com

https://www.laserfocusworld.com/executive-forum/article/14290913/silicon-photonics-is-it-witchcraft

a. 17th March 2023
b. Details of the event can be found at https://www.laserfocusworld.com/executive-forum and agenda at https://www.lfwexecutiveforum.com, and article at: https://www.laserfocusworld.com/executive-forum/article/14290913/silicon-photonics-is-it-witchcraft, written by Sally Cole Johnson for Laser Focus.
c. Panelists included: Jose Pozo, CTO Optica, David Piehler, Dell Technologies, Peter Winzer, Nubis Communications, Robert Blum, Intel

360) Invited article for IMS expert insights entitled, "An Expert Witness Perspective on Inter Partes Review of Patents" by Dr. Michael Lebby, IMS Elite Expert, https://www.expertservices.com/insight/expert-witness-ipr-patents/

a. 12th April 2023
b. Details can be found at https://www.expertservices.com
c. Patent litigation cases can be won or lost through the actions and competency of an expert witness—making their role not only important but crucial. The article takes a closer look at the part an expert witness plays during the *inter partes* review and considers how the IPR process could be improved.

361) Invited interview with Semiconductor Engineering by Karen Heyman, in an article called https://semiengineering.com/transitioning-to-photonics/ entitled, "Transitioning to Photonics"

a. Interview taken on 4th April 2023 and published online 14th April 2023
b. Details can be found at: https://semiengineering.com/about-us/
c. The article is based on the premise that high speed and low heat make photonics technology essential, especially compared to electronics, but it's extremely complex, and talent is hard to find and train.

362) Session Co-chairman: 8th PIC International conference, www.picinternational.net

a. 17-18th April 2023 for 2 days of PIC sessions.
b. Conference hosted by Angel events together with CS International and Power Electronics International conferences.
c. Sheraton Airport Hotel, Brussels, Belgium.

363) Chair Panel session: For the panel entitled, "Foundry models for PICs" of 8th PIC International conference, www.picinternational.net and moderated by Jose Pozo, CTO Optica. Panel members included Global Foundries, Tower, VTT

a. 17th April 2022
b. Conference hosted by Angel events together with CS International, and Power Electronics International conferences.
c. Sheraton Airport Hotel, Brussels, Belgium.

364) Invited speaker and oral presentation: With presentation entitled, "Positioning electro-optic polymer modulators as an optical engine to extend data rate and low power performance for optical networking" at the 8th PIC International conference, www.picinternational.net in the day 2 session, "Scaling PICs in volume using foundries"

a. 18th April 2023

Professor (Dr. Dr.) Michael S. Lebby, B. Eng. (Hons), MBA, Ph.D., D. Eng, Fellow NAI, IEEE, Optica (OSA); C. Eng.
1 Hawthorne St., unit 25a, San Francisco, CA 94105, USA; mobile +1 717 839 7078; drmlebby@gmail.com

b. Conference hosted by Angel events together with CS International, and Power Electronics International conferences.
c. Sheraton Airport Hotel, Brussels, Belgium.

365) Invited speaker: "Status of Lightwave Logic and electro-optic polymers" at the Cleydael Golf Club, Antwerp, Belgium (www.cleydael.be)
a. 18th April 2023
b. Meeting organized by Belgium and Dutch retail investors of Lightwave Logic Inc. (NASDAQ:LWLG)
c. Location: Belgium

366) Invited interview with Semiconductor Engineering by Karen Heyman, in an article called https://semiengineering.com/new-standards-push-co-packaged-optics/entitled, "New standard push co-packaged optics"
a. Interview taken on 4th April 2023 and published online 26th April 2023
b. Details can be found at: https://semiengineering.com/about-us/
c. The article is based on the premise that co-packaged optics (CPOs) promises five times the bandwidth of pluggable connections, however, the new architecture requires multiple changes to accommodate different applications, and if the design is efficient the optical engines will be able to impact both on-board optics as well as pluggable transceivers.

367) Invited speaker and oral presentation for the Sequire Investor Summit, San Juan, Puerto Rico. The presentation was entitled, "LWLG April 2023 investor presentation" with link https://puertorico.srax.com with agenda: https://schedule.puertorico.srax.com
a. Conference on 25th and 26th April 2023 with presentation on 25th April 2023
b. Link to website for Sequire event: https://puertorico.srax.com
c. Investor conference at the La Concha hotel San Juan, Puerto Rico.

368) Invited speaker and oral presentation: Ladenburg Thalmann Technology Expo and conference 2023. The presentation was entitled, "LWLG April 2023 investor presentation" and can be found at: https://www.meetmax.com/sched/event_94169/__co-list_cp.html
a. 27th April 2023
b. The conference and expo 2023, was held at Convene Hotel, Park and 41st, New York, New York and can be found at: https://www.meetmax.com/sched/event_94169/__co-list_cp.html and also at https://www.ladenburg.com/investment-banking/ladenburg-thalmann-co-inc-
c. The 2023 Expo featured presentations from the managements of approximately 50-60 public and private technology companies covering Media and Content-Tech, Software and Service-Tech, and Hardware and Defend-Tech.

369) Invited article: 8th PIC International conference overview entitled, "An overview of Angeltech 2023 (PIC international conference)", which can be found at www.picinternational.net with newsletters@angelmail.co.uk
a. 2nd May 2023

Professor (Dr. Dr.) Michael S. Lebby, B. Eng. (Hons), MBA, Ph.D., D. Eng, Fellow NAI, IEEE, Optica (OSA); C. Eng.
1 Hawthorne St., unit 25a, San Francisco, CA 94105, USA; mobile +1 717 839 7078; drmlebby@gmail.com

b. Overview is based on the results of the PIC International Conference hosted by Angel events (17-18th April 2023) together with CS International and Power Electronics International conferences.
c. Sheraton Airport Hotel, Brussels, Belgium.

370) Invited speaker to chair Lightwave Logic Inc's Annual Shareholder Meeting (ASM) at the Inverness Hilton, Englewood, Colorado.
a. 25th May 2023
b. Lightwave logic Inc., Denver, Colorado.
c. Read script, chair voting procedures for Lightwave Logic Annual shareholder meeting for Lightwave Logic Inc.

371) Invited speaker for management/CEO presentation for Lightwave Logic Inc., at the Annual Shareholder Meeting (ASM) at the Inverness Hilton, Englewood, Colorado
a. 25th May 2023
b. Lightwave logic Inc., Denver, Colorado.
c. Annual shareholder meeting for Lightwave Logic Inc., with live presentation with live Q&A from investors.

372) Reviewer: European Commission HORIZON-CL4-2022-DIGITAL-EMERGING-Human-01-57 (Digital and emerging technologies for competitiveness and fit for the Green Deal), Horizon IA: Towards next generation of cost-effective multi and hyper spectral remote sensing systems, and applications to health, automotive, and waster sorting.
a. 10-26th May 2023
b. European Commission: Reviewing submitted technical photonics proposals for Horizon 2023 evaluation calls and rate proposals to EU guidelines.
c. IA:http://ec.europa.eu/research/participants/portal/desktop/en/opportunities/h2020

373) Invited keynote speaker at Safecapital investor conference in Ghent with talk entitled, "Commercializing electro-optic polymers" hosted by Brecht Arnaert, Chief Editor www.safecapital.eu with Safecapital Lente meeting, Vander Valk Hotel, Ghent.
a. 27th May 2023
b. Vander Valk Hotel, Ghent, Belgium
c. Safecapital organized a retail investor event with an invite for Lightwave Logic to present and network with investors: https://tixoom.app/brechtarnaert/ur0v1eff

374) Invited interview with Stephen Hardy of Lightwave Online (www.lightwaveonline.com) with discussion entitled, "Lightwave Logic reaches electro-optic polymer materials commercialization with supply license agreement" and can be found at:https://www.lightwaveonline.com/optical-tech/components/article/14294661/lightwave-logic-reaches-electrooptic-polymer-materials-commercialization-with-supply-license-agreement?utm_source=LW+Friday+5&utm_medium=email&utm_campaign=CPS230602105&o_eid=9764C7112945F2S&rdx.ident%5Bpull%5D=omeda%7C9764C7112945F2S&oly_enc_id=9764C7112945F2S
a. Interview conducted on 30th May 2023, and published at www.lightwaveonline.com on 1st June in Stephen Hardy's Friday 5.
b. Article published at https://www.lightwaveonline.com

Professor (Dr. Dr.) Michael S. Lebby, B. Eng. (Hons), MBA, Ph.D., D. Eng, Fellow NAI, IEEE, Optica (OSA); C. Eng.
1 Hawthorne St., unit 25a, San Francisco, CA 94105, USA; mobile +1 717 839 7078; drmlebby@gmail.com

c. Lightwave online reports on activity in the fiber optics lightwave communications industry at https://www.lightwaveonline.com

375) Invited Live TV interview: Benzinga (Spencer Israel show).
   a. TV interview on 9th June 2023 with youtube recording: https://www.youtube.com/watch?v=jFiB9P3voUk
   b. Presentation can be found at: https://www.youtube.com/watch?v=jFiB9P3voUk and the Spencer Israel show/background at https://www.linkedin.com/in/spencer-israel-44b02b31/ and https://www.benzinga.com/author/spencer-israel/

376) Project advisor and panelist: European Commission HORIZON-CL4-2021-DIGITAL-EMERGING-01-07 LOLIPOP EU project number 101070441
   a. 21st June 2023
   b. European Commission
   c. https://horizon-de-lolipop.eu
   d. LOLIPOP: Lithium NiObate empowered siLIcon nitride Platform for fragmentation free OPeration in the visible and the NIR. Material technology includes LNOI (lithium niobate on insulator) and TFLN (thin film lithium niobate).

377) Contributing author: Heterogeneous Integration Roadmap (2023 edition), Chapter 17 Test Technology which can be found at: https://eps.ieee.org/images/files/HIR_2023/ch17_test.pdf
   a. 9th August 2023
   b. https://eps.ieee.org/technology/heterogeneous-integration-roadmap.html
   c. Overview of the roadmap: The ITRS Assembly and Packaging Working Group has had many years of history of collaboration with the IEEE Societies in holding workshops and work sessions at IEEE Societies sponsored conferences and events around the world. The basis of this collaboration is the common shared interest in a Technology Roadmap for the IEEE Societies' membership, conference attendees and participants in the ITRS Technical Working Group work sessions. IEEE Societies Conferences are high profile forums on the latest research and development in Packaging, Interconnect, Test and the materials, processes and equipment supporting this R&D. The Roadmap workshops of the ITRS had provided an opportunity for the participants to review the directions of these technologies and build a technology Roadmap looking 15 years into the future.

378) Invited interview with the publication TWST (The Wall Street Transcript) and Erik Sherman, a reporter at (www.twst.com). The interview entitled "Interview with the Chairperson and CEO: Lightwave Logic Inc. (NASDAQ:LWLG)"
   a. Interview taken on 42nd August 2023 and published online 17th August 2023
   b. Details can be found at: (www.twst.com) and https://www.twst.com/interview/interview-with-the-chairperson-and-ceo-lightwave-logic-inc-nasdaqlwlg
   c. The Wall Street Transcript is a subscriber-based online and print publication for retail and institutional investors. For more than 50 years, it has published

Professor (Dr. Dr.) Michael S. Lebby, B. Eng. (Hons), MBA, Ph.D., D. Eng, Fellow NAI, IEEE, Optica (OSA); C. Eng.
1 Hawthorne St., unit 25a, San Francisco, CA 94105, USA; mobile +1 717 839 7078; drmlebby@gmail.com

thousands of in-depth interviews with CEOs, industry analysts and professional money managers. The article is about Lightwave Logic and their market positioning for electro-optic polymer modulators in fiber optic communications.

379) Invited Live TV interview with Planet MicroCap Podcast and host Robert Kraft https://planetmicrocapshowcase.com as Chairman and CEO of Lightwave Logic Inc.
   a. Recorded 23rd August 2023 and went live at the conference 6th September 2023.
   b. Hosted by Robert Kraft with video interview can be found at the website https://planetmicrocapshowcase.com
   c. Location: Virtually recorded in Washington DC

380) Invited presentation entitled, "commercializing electro-optic polymers" with Q&A by host Robert Kraft for Vancouver conference by Planet MicroCap https://planetmicrocapshowcase.com
   a. 23rd August 2023 with presentation conveyed on 6th and 7th September 2023
   b. Hosted by Robert Kraft with video Q&A that can be found at the website https://planetmicrocapshowcase.com and https://planetmicrocapshowcase.com/page-1551
   c. Location: Virtually recorded in Washington DC for virtual viewing in Vancouver Canada.

381) Invited interview for the Denver Business Journal, reported by Cassidy Ritter. With title of article, "Englewood tech company making the internet faster expands lab to scale commercial arm: The CEO said high speed and low power are the internet's Achilles heels, but that his company's technology can address those concerns."
   a. 8th September 2023
   b. Web link: https://www.bizjournals.com/denver/news/2023/09/08/lightwave-logic-expands-lab-commerical-arm.html
   c. The Denver Business Journal reports on business activities in the Denver tech center region. https://www.bizjournals.com/denver/ Interview location at Lightwave Logic Headquarters in Englewood, Colorado.

382) Invited talk at HC Wainwright conference called: 'H.C. Wainwright 25th Annual Global Investment Conference', with a talk entitled, "Making the internet faster and more efficient" and link to website: https://journey.ct.events/hub/37dab2e5-2e54-48d4-9288-d6a3d11a986c and https://hcwco.com
   a. 11 and 12th September 2023 (talk on 11th September 2023)
   b. Meeting organized by HC Wainwright Investment Banking (https://hcwco.com and https://journey.ct.events/vpages/37dab2e5-2e54-48d4-9288-d6a3d11a986c/ae480130-ce5f-4513-9cd1-81afdb08853a). Location: Lotte Palace Hotel, New York City, NY

383) Invited article for Techradar: The Business Technology Experts (www.techradar.com) entitled: "Artificial intelligence is a very real data center problem"
   a. Published 18th September 2023
   b. Web link: https://www.techradar.com/pro/artificial-intelligence-is-a-very-real-data-center-problem
   c. The techradar pro (https://www.techradar.com/pro)

Professor (Dr. Dr.) Michael S. Lebby, B. Eng. (Hons), MBA, Ph.D., D. Eng, Fellow NAI, IEEE, Optica (OSA); C. Eng.
1 Hawthorne St., unit 25a, San Francisco, CA 94105, USA; mobile +1 717 839 7078; drmlebby@gmail.com

384) Chair of technical committee for ECOC exhibit's Market Focus sessions at ECOC 2023, at the SECC conference center, Glasgow, Scotland.
   a. 2nd – 4th October 2023
   b. Six Market Focus sessions and two panels were organized for ECOC Market Focus 2023 with sessions in broadband access, datacentres, service provider optical transmission, network agility/SDN, photonics integration, new component technologies and packet optical transport. ECOC exhibit organized by Nexus Business Media Ltd.
   c. https://www.ecocexhibition.com/ecoc-exhibition-2022/ and highlights including photographs at: https://www.ecocexhibition.com/home/2023-highlights/

385) Session Chair for two sessions at ECOC's Market Focus session 1 and session 2 on modules/sub-systems.
   a. 2nd October 2023
   b. These two sessions (am and pm) attracted up to 400 attendees in various talks, and focused on optical pluggable modules and transceivers, and their associated line cards, switches, routers and sub-system optical networking equipment.
   c. The sessions can be found at: https://www.ecocexhibition.com/visit/market-focus/market-focus-2023-timetable/ The Market Focus sessions were held at the SECC conference center, Glasgow, Scotland.

386) Awards committee chairman, Market Focus, ECOC exhibit, 2023. With role to present 9 awards to winners of industrial product-based technologies in optical communications.
   a. 3rd October 2023
   b. The Market Focus awards https://www.ecocexhibition.com/home/2023-highlights/ is a competition that is run by the technical committee with submissions from various industrial companies globally.
   c. The awards were presented to winners at the Product Focus auditorium to 9 winners on 3rd October 2023 (https://www.ecocexhibition.com/industry-awards/) at ECOC's exhibit, SECC conference center, Glasgow, Scotland.

387) Selected talk and speaker at ECOC's Market Focus session on modules/sub-systems. Talk was entitled, "Commercializing reliable hybrid electro-optic polymer modulators" and can be found at: https://www.ecocexhibition.com/visit/market-focus/
   a. 2nd October 2023
   b. Every year the Market Focus is the key place to get up-to-date knowledge from across the industry in key technical areas and discover the latest commercial trends in optical communications. Now in it's 17th year the Market Focus theatre is one of the highlights of the ECOC Exhibition attracting the world's best speakers from the industry globally.
   c. Talk can be found from the Market Focus session talks at: https://www.ecocexhibition.com/visit/market-focus/market-focus-2023-timetable/

388) Invited video interview by ECOC TV: "2023 Market Focus review in Glasgow, Scotland" as Chairman of ECOC 2023 Market Focus Technical Committee at the conference.

Professor (Dr. Dr.) Michael S. Lebby, B. Eng. (Hons), MBA, Ph.D., D. Eng, Fellow NAI, IEEE, Optica (OSA); C. Eng.
1 Hawthorne St., unit 25a, San Francisco, CA 94105, USA; mobile +1 717 839 7078; drmlebby@gmail.com

a. Recorded 3rd October 2023
b. Market Focus Exhibition for ECOC 2023,
c. Hosted by ECOC exhibition: https://www.ecocexhibition.com/visit/market-focus/ and https://www.ecocexhibition.com/home/2023-highlights/

389) Invited video interview by ECOC TV for industrial award competition opening for 2024's ECOC at Frankfurt, Germany as Chairman of ECOC Market Focus Technical Committee.
a. Recorded 3rd October 2023
b. Market Focus Industrial Awards competition for ECOC 2024.
c. Hosted by ECOC exhibition: https://www.ecocexhibition.com/visit/market-focus/ and https://www.ecocexhibition.com/home/2023-highlights/

390) Invited video interview by ECOC TV for invited abstracts for 2024's Market Focus technical sessions at ECOC at Frankfurt, Germany as Chairman of ECOC Market Focus Technical Committee.
a. Recorded 3rd October 2023
b. Market Focus invite for abstracts for ECOC 2024.
c. Hosted by ECOC exhibition: https://www.ecocexhibition.com/visit/market-focus/ and https://www.ecocexhibition.com/home/2023-highlights/

391) Winner: Acceptance of glass trophy for ECOC Industry awards on behalf of Lightwave Logic Inc. in the most innovative hybrid/PIC (photonic integration circuit) integration platform: https://www.ecocexhibition.com/visit/ecoc-exhibition-industry-awards/
a. 3rd October 2023
b. Held at the Product Focus session, ECOC Exhibition Industry Award Winner Announcement (https://www.ecocexhibition.com/home/2023-highlights/)
c. ECOC 2023, Glasgow, Scotland. The award is for the most innovative product platform in hybrid PICs across the industry—what new product is driving change in its respective market segment. What's timely and helping to increase the use of optics. Metrics would include design features that are photonics, electronics, thermal, mechanical, chemical, environmental and carbon footprint based (https://www.ecocexhibition.com/industry-awards/).

392) Invited video 'Lightwave Logic advancing its silicon photonic prototypes" by Proactive, (https://www.proactiveinvestors.com), and is interviewed by Tom Warner with video https://www.proactiveinvestors.co.uk/companies/news/1028712/lightwave-logic-picks-up-industry-award-for-its-work-in-speeding-up-the-internet-1028712.html
a. 4th October 2023
b. Proactive video (Wall St) series (https://youtu.be/amz8jxV9YS4)
c. Lightwave Logic, Inc. (NASDAQ: LWLG) CEO Michael Lebby is interviewed live at ECOC 2023 show floor with a glass trophy in hand from winning the hybrid/PIC integration platform award at Market Focus Awards (https://www.ecocexhibition.com/industry-awards/)

Professor (Dr. Dr.) Michael S. Lebby, B. Eng. (Hons), MBA, Ph.D., D. Eng, Fellow NAI, IEEE, Optica (OSA); C. Eng.
1 Hawthorne St., unit 25a, San Francisco, CA 94105, USA; mobile +1 717 839 7078; drmlebby@gmail.com

393) Invited video interview by ECOC TV: "2023 Industry Award Winners ECOC Exhibition, Glasgow, Scotland" as Chairman of ECOC 2023 Market Focus Technical Committee at the conference: https://youtu.be/k_CYdV7CDd0
   a. Recorded 3rd October 2023 and published 13th October 2023
   b. Industry awards interview can be found at: https://youtu.be/k_CYdV7CDd0
   c. Hosted by ECOC exhibition: https://www.ecocexhibition.com/visit/market-focus/ and https://www.ecocexhibition.com/home/2023-highlights/

394) Invited video interview by ECOC TV: "Winner of Most innovative Product – Hybrid PIC/Optical Integration Platform for Lightwave Logic Inc., https://youtu.be/KYYQjVHfDq8
   a. Recorded 3rd October 2023 and published 13th October 2023
   b. Industry winning award interview can be found at: https://youtu.be/KYYQjVHfDq8
   c. Hosted by ECOC exhibition: https://www.ecocexhibition.com/visit/market-focus/ and https://www.ecocexhibition.com/home/2023-highlights
   d.

395) Invited speaker at the Photonics Enabled Cloud Computing (PECC) Summit organized by Optica (https://www.optica.org/events/industry_events/2023/optica_photonic-enabled_cloud_computing_industry_summit_at_juniper_networks/program/) Talk entitled: "Commercializing Electro-Optic Polymers" and was given in the 5th session on Materials and Components to Advance Optical Technologies.
   a. 24-25th October 2023; talk took place on 25th October 2023
   b. Organized by Optica (https://www.optica.org/events/industry_events/2023/optica_photonic-enabled_cloud_computing_industry_summit_at_juniper_networks/)
   c. Located at Juniper's conference facility, Sunnyvale, California.

396) Invited co-speaker at PIC Summit Conference, Eindhoven, Netherlands in conjunction with IPSR conference for Polymers
   a. 8th November 2023
   b. PIC Summit Europe conference. https://www.picsummiteurope.com
   c. Located at the TU/e Eindhoven University, Netherlands.

397) Invited co-speaker at PIC Summit Conference, Eindhoven, Netherlands in conjunction with IPSR conference for datacom and telecom
   a. 8th November 2023
   b. PIC Summit Europe conference. . https://www.picsummiteurope.com
   c. Located at the TU/e Eindhoven University, Netherlands.

398) Project advisor and panelist: European Commission HORIZON-CL4-2022-DIGITAL-EMERGING-01-03 CORALIDAR EU project number 101092834 for 1st review meeting (virtual).
   a. 30th November 2023
   b. European Commission: https://corali-dar.eu
   c. CORA-LIDAR: Collaborative Radio - Light Detection And Ranging

Professor (Dr. Dr.) Michael S. Lebby, B. Eng. (Hons), MBA, Ph.D., D. Eng, Fellow NAI, IEEE, Optica (OSA); C. Eng.
1 Hawthorne St., unit 25a, San Francisco, CA 94105, USA; mobile +1 717 839 7078; drmlebby@gmail.com

399) Invited Live TV interview: Benzinga All Access Fireside Chat (15mins inclusive of Q&A) as part of the Zunaid Suleman show.
   a. TV interview on 4th December 2023 with youtube recording: https://www.youtube.com/watch?v=CEZ51a_HTpY
   b. Video interview can be found at: https://www.benzinga.com and https://www.youtube.com/watch?v=CEZ51a_HTpY and the Zunaid Suleman show/background at https://www.benzinga.com/events/speakers/zunaid-suleman/
   c. Location: Virtually recorded in New York, NY

2024

400) Invited speaker and oral presentation for the Sequire Investor Summit, San Juan, Puerto Rico. The presentation was entitled, "LWLG January 2024 investor presentation" with link https://puertorico.srax.com with agenda: https://schedule.puertorico.srax.com
   a. Conference on 24th and 26^{5h} January 2024 with presentation on 24th January 2024
   b. Link to website for Sequire event: https://puertorico.srax.com
   c. Investor conference at the Conadado Vanderbuilt hotel San Juan, Puerto Rico.

401) Introducing speaker and moderator for Optica's VIP executive meeting at MOMA (as part of Photonics West conference in San Francisco, CA). Moderating Alan Lowe through Q&A with an audience of >400.
   a. 29th Jan 2024
   b. Details can be found at www.optica.org
   c. Location: Museum of Modern Art, San Francisco,

402) Reviewer: (European Commission) for project InSiDe
   a. 30th Jan 2024
   b. Virtual meeting for the consortium.
   c. InSiDe is an EU project for PIC based technology in the medical field to monitor blood flow and artery stiffness in the human body using long wavelength lasers and silicon photonics. Hospital clinical trials will be conducted. It is a follow-on with more clinical trials from an initial CARDIS EU project.
   d. http://www.inside-h2020.eu

403) Chair and moderator/host for EPIC Photonics VIP executive reception, located at 1 Hawthorne Street, San Francisco, CA 94105.
   a. 30th Jan 2024
   b. Located at 1 Hawthorne St., San Francisco which attracted over 150 attendees.
   c. The EPIC VIP executive reception is the 4th in the series and was organized by EPIC Photonics.
   d.

404) Interviewer & Chair and moderator for Optica's VIP executive reception, located in parallel with SPIE's Photonics West 2024. The role included a speech to introduce Lumentum's President and CEO Alan Lowe, and to moderate questions and answers (on behalf of having the role of Chair, Corporate Engagement Council, Optica).
   a. 30th Jan 2024

Professor (Dr. Dr.) Michael S. Lebby, B. Eng. (Hons), MBA, Ph.D., D. Eng, Fellow NAI, IEEE, Optica (OSA); C. Eng.
1 Hawthorne St., unit 25a, San Francisco, CA 94105, USA; mobile +1 717 839 7078; drmlebby@gmail.com

b. Located at the auditorium of the San Francisco Museum of Modern Art (SF-MOMA), which attracted a sellout of 500 guests.
c. The Optica VIP executive reception is the 2nd in the series, with the first being held in 2023.

405) Project advisor and panelist: European Commission HORIZON-EIC-2022-TRANSITION OPEN-01 (ALUVIA) EU project number 101099699 for 1st review meeting (virtual).
a. 16th February 2024
b. European Commission: https://aluvia-project.eu
c. ALUVIA: Aluminium oxide integrated photonic platform for applications in the ultraviolet (UV)

406) Invited and recorded TV interview: Benzinga All Access Fireside Chat (15mins inclusive of Q&A) as part of the Zunaid Suleman show.
a. Recorded TV interview on 23rd February 2024 for release 1st March 2024 https://www.youtube.com/watch?v=CEZ51a_HTpY
b. Video interview can be found at: https://www.benzinga.com and https://www.youtube.com/watch?v=CEZ51a_HTpY and the Zunaid Suleman show/background at https://www.benzinga.com/events/speakers/zunaid-suleman/
c. Location: Virtually recorded in Washington, DC.

407) Project advisor and panelist: European Commission Cordis InPULSE (jeppix) EU project number/grant agreement 824980 for 3rd review meeting (virtual).
a. 14th March 2024
b. European Commission: https://cordis.europa.eu/project/id/824980/reporting and https://www.jeppix.eu
c. InPULSE: Establishing a proven European PIC ecosystem by building an open access pilot line as well as InP pilot line for scaled up, self-sustained PIC eco-system.

408) Invited speaker and panelist for OFC workshop entitled "Will Heterogeneous Integration Meet the Needs of Future Applications?" (https://www.ofcconference.org/en-us/home/program-speakers/workshops/will-heterogeneous-integration-meet-the-needs/) in OFC 2024, San Diego, California. Presnetation was entitled, "Electro-optic polymers for heterogeneous integration."
a. 24th March 2024
b. Details of the event can be found at https://www.ofcconference.org/en-us/home/program-speakers/ and agenda at (https://www.ofcconference.org/en-us/home/program-speakers/workshops/will-heterogeneous-integration-meet-the-needs/) Panelists included: Wim Bogaerts, *Ghent University, Belgium,* Alex Chikhaoui, *X-Celeprint, Ireland,* Ivan Huang, *Avicena Tech, United States,* Sylvie Menezo, *Scintil, France,* Edward Preisler, *Tower Semiconductor, United States,* Mian Zhang, *Hyperlight, United States*
c. Location: Live at San Diego conference center, San Diego, California

409) Invited moderator for Optica's Executive forum CEO panel at OFC 2024 in San Diego, California,

Professor (Dr. Dr.) Michael S. Lebby, B. Eng. (Hons), MBA, Ph.D., D. Eng, Fellow NAI, IEEE, Optica (OSA); C. Eng.
1 Hawthorne St., unit 25a, San Francisco, CA 94105, USA; mobile +1 717 839 7078; drmlebby@gmail.com

(https://www.optica.org/events/industry_events/2024/optica_executive_forum_at_ofc_2024/program/). The CEO panel consisted of: David Heard CEO, Infinera, Alan Lowe CEO, Lumentum, Chuck Mattera CEO, Coherent, Bill Brennan CEO, Credo

a. 25th March 2024
b. Details of the Executive Forum can be found at: https://www.optica.org/events/industry_events/2024/optica_executive_forum_at_ofc_2024/ located at the Hilton Bayfront, San Diego, California

410) Invited video "Lightwave Logic Demonstrates World-Class 200Gbps Heterogeneous Polymer/Silicon Photonic Modulator Results through Extending Silicon Photonics Performance using its Proprietary Perkinamine® Electro-Optic Materials Based on 200mm Commercial Wafers at the 2024 Optical Fiber Conference in San Diego" by Proactive, (https://www.proactiveinvestors.com), and is interviewed by Steve Darling with link: Lightwave Logic Leads the Way in Electro-Optic Polymer Technology for Enhanced Data Transmission

a. 4th April 2024 (published 11:21am)
b. Proactive video (Wall St) series (https://www.proactiveinvestors.com/NASDAQ:LWLG/Lightwave-Logic-Inc)
c. Lightwave Logic, Inc. (NASDAQ: LWLG) Chairman and CEO Michael Lebby is interviewed after OFC2024.

411) Invited speaker: LD Micro Invitational XIV conference at Sofitel Hotel New York, NY with presentation entitled, "Lightwave Logic status and update" https://ldinv14.sequireevents.com/ and https://www.meetmax.com/sched/event_103991/investor_welcome.html

a. 8th and 9th April 2024 with oral presentation on 9th April 2024
b. Presentation at https://api.mziq.com/mzfilemanager/v2/d/307dbc8b-e212-48ba-9968-8cef3f6b5188/683426d1-5a08-bc3a-6df3-ce127bd5ef17?origin=2
c. Hosted by LD Micro NASDAQ: SRAX with URL: http://www.ldmicro.com

412) Project advisor and panelist: European Commission PhotonHub EU project number/grant agreement 101016665 for 2nd review meeting (virtual). Project call DT-ICT-04-2020 - Photonics Innovation Hubs

a. 11th and 12th April 2024
b. European Commission: https://www.photonhub.eu and https://cordis.europa.eu/project/id/101016665
c. PhotonHub: PhotonHub Europe is a unique European full-service one-stop-shop Photonics Innovation Hub to advance EU competitiveness.

413) Invited Chair and conference moderator for the 1st and inaugural ESS (Executive Strategy Summit) – a global perspective that includes electronics, semiconductors, photonics, sensing with focus a) economic trends and market drivers, b) funding opportunities , c) intellectual property, patents, mergers and acquisitions. https://angel-tech.net/executivestrategysummit/agenda

a. 15th April 2024
b. Brussels, Belgium

Professor (Dr. Dr.) Michael S. Lebby, B. Eng. (Hons), MBA, Ph.D., D. Eng, Fellow NAI, IEEE, Optica (OSA); C. Eng.
1 Hawthorne St., unit 25a, San Francisco, CA 94105, USA; mobile +1 717 839 7078; drmlebby@gmail.com

c. https://angel-tech.net/executivestrategysummit The conference will delve into key topics such as emerging economic trends, disruptive technologies, market forecasts, and funding strategies. By exploring these areas, attendees will gain a deeper understanding of the market landscape and the implications for their business strategies. Moreover, they will gain valuable insights into how to navigate the complex funding landscape and capitalize on growth opportunities in the CS, PIC and PE industries.

414) Invited panel speaker for PIC (PIC International Conference) panel entitled, "Advancing the frontier of photonic integration: challenges and innovations in PIC packaging" with panel members from PHIX, LWLG, Tyndall National Institute (PIXAPP), POET Technologies. https://picinternational.net/agenda

a. 16th April 2024
b. Brussels, Belgium
c. https://picinternational.net The 9th PIC International conference aims to connect, educate, and inspire the photonic integrated circuit (PIC) industry. With presentations covering seven sectors, attendees will gain insights into topics like Hybrid PICs: Pioneering New Frontiers in Photonic Integration; PIC Packaging: Securing Optimal Integration and Performance; Quantum Era: Unleashing PICs' Boundless Potential; Rapid Scaling: Foundries Fuelling PICs' Mass Production; Accelerating PIC Adoption in Established Markets; PIC Size and Simulation: Enhancing Design Efficiency, and Power Efficiency: Minimizing Consumption in PICs.

415) Invited conference co-chair (with David Cheskis) for 9th PIC (PIC International Conference) https://picinternational.net/agenda

a. 16th and 17th April 2024
b. Brussels, Belgium
c. https://picinternational.net The 9th PIC International conference aims to connect, educate, and inspire the photonic integrated circuit (PIC) industry. With presentations covering seven sectors, attendees will gain insights into topics like Hybrid PICs: Pioneering New Frontiers in Photonic Integration; PIC Packaging: Securing Optimal Integration and Performance; Quantum Era: Unleashing PICs' Boundless Potential; Rapid Scaling: Foundries Fuelling PICs' Mass Production; Accelerating PIC Adoption in Established Markets; PIC Size and Simulation: Enhancing Design Efficiency, and Power Efficiency: Minimizing Consumption in PICs.

416) Invited speaker for 9th PIC International Conference with talk entitled, "High speed, low power, tiny modulators in a polymer PIC platform are poised to enable 800G/1.6Tbps data communications, driven in part by artificial intelligence." https://picinternational.net/agenda

a. 16th April 2024
b. Brussels, Belgium
c. https://picinternational.net The 9th PIC International conference aims to connect, educate, and inspire the photonic integrated circuit (PIC) industry. With

Professor (Dr. Dr.) Michael S. Lebby, B. Eng. (Hons), MBA, Ph.D., D. Eng, Fellow NAI, IEEE, Optica (OSA); C. Eng.
1 Hawthorne St., unit 25a, San Francisco, CA 94105, USA; mobile +1 717 839 7078; drmlebby@gmail.com

presentations covering seven sectors, attendees will gain insights into topics like Hybrid PICs: Pioneering New Frontiers in Photonic Integration; PIC Packaging: Securing Optimal Integration and Performance; Quantum Era: Unleashing PICs' Boundless Potential; Rapid Scaling: Foundries Fuelling PICs' Mass Production; Accelerating PIC Adoption in Established Markets; PIC Size and Simulation: Enhancing Design Efficiency, and Power Efficiency: Minimizing Consumption in PICs.

417) Invited talk for Lightwave Logic (LWLG) retail investor base, Antwerp, Belgium. Investor as part of a multi-company retail investor conference. Talk entitled, "Recent commercial and technical progress in Lightwave Logic polymer modulators."
   a. 19th April 2024
   b. Crown Plaza Hotel, Antwerp, Belgium
   c. Organized by Belgium and Dutch retail investors as part of a 150 person conference.

418) Invited keynote speaker at Safecapital investor conference in Ghent with talk entitled, "Recent progress in commercializing electro-optic polymers" hosted by Brecht Arnaert, Chief Editor www.safecapital.eu with Safecapital Lente meeting, Vander Valk Hotel, Ghent.
   a. 20th April 2024
   b. Vander Valk Hotel, Ghent, Belgium
   c. Safecapital organized a retail investor event with an invite for Lightwave Logic to present and network with investors: https://tixoom.app/brechtarnaert/ur0v1eff

419) Project advisor and panelist: European Commission HORIZON-CL4-2021-DIGITAL-EMERGING-01-07 LOLIPOP EU project number 101070441 for 2nd review meeting (virtual).
   a. 29th April 2024
   b. European Commission: https://horizon-de-lolipop.eu
   c. LOLIPOP: Lithium NiObate empowered siLIcon nitride Platform for fragmentation free OPeration in the visible and the NIR. Material technology includes LNOI (lithium niobate on insulator) and TFLN (thin film lithium niobate).

420) Invited speaker for HC Wainwright non-deal roadshow presenting Lightwave Logic investor presentations to selected funds, investment banks etc.
   a. 30th April 2024
   b. HW Wainwright banking https://hcwevents.com
   c. HW Wainwright organized a NDR for LWLG Inc., https://hcwco.com/about-us/our-history/

421) Invited speaker and presentation at Lightwave Logic Annual Shareholder meetings 2024 with Business Management Update, and presentation entitled, "Lightwave logic CEO management review"
   a. 22nd May 2024
   b. Presentation can be found at: https://viavid.webcasts.com/viewer/event.jsp?ei=1661614&tp_key=0e4b468303

Professor (Dr. Dr.) Michael S. Lebby, B. Eng. (Hons), MBA, Ph.D., D. Eng, Fellow NAI, IEEE, Optica (OSA); C. Eng.
1 Hawthorne St., unit 25a, San Francisco, CA 94105, USA; mobile +1 717 839 7078; drmlebby@gmail.com

422) Invited speaker to chair Lightwave Logic Inc's Annual Shareholder Meeting (ASM) at the Inverness Hilton, Englewood, Colorado.
   a. 22nd May 2024
   b. Lightwave logic Inc., Denver, Colorado: https://viavid.webcasts.com/viewer/event.jsp?ei=1661614&tp_key=0e4b468303
   c. Read script, chair voting procedures for Lightwave Logic Annual shareholder meeting for Lightwave Logic Inc.

423) Invited Webinar and virtual fireside chat with Maxim equity research analyst Matthew Galinko as part of their TMT Conference
   a. 4th June 2024
   b. Virtual interview/fireside chat and webinar.
   c. Maxim equity research https://maximgrp.com/divisions/equity-research

424) Invited keynote speaker at ISLiST VII (VIIth International School of Light Sciences and Technologies (in collaboration with UIMP (Unversidad Internacional Menedez Pelayo), with keynote talk entitled, "Next Generation of Photonics Integrated Circuits as key for communications and sensing"
   a. 17th June 2024
   b. Talk given at Palacio de la Magdalena (royal palace of Magdalena), Santander, Spain.
   c. Conference organized by Professor Jose Miguel Lopez Higuera as part of light in communications, sensing and lighting.

425) Invited and recorded TV interview: Benzinga All Access Fireside Chat (15mins inclusive of Q&A) as part of the Zunaid Suleman show.
   a. Recorded TV interview on 8th August 2024 for release 12th August 2024 https://www.youtube.com/watch?v=CEZ51a_HTpY
   b. Video interview can be found at: https://www.benzinga.com and https://www.youtube.com/watch?v=CEZ51a_HTpY and the Zunaid Suleman show/background at https://www.benzinga.com/events/speakers/zunaid-suleman/
   c. Location: Virtually recorded in San Francisco, CA.

426) Invited talk at HC Wainwright conference called: 'H.C. Wainwright 26th Annual Global Investment Conference', with a talk entitled, "Faster by design" and link to website: https://nqwfwxkab.cc.rs6.net/tn.jsp?f=001HNmOJkwLV6iDTd9M6szjF4dgaKY7RbqXCBMAl3-ZV_cJ5uO65rM2bMB8Cf3OFxUedu25J8jukebVGEuEcGEXoxga71OC9oBvxYr2CeTYhlMcyKD-l_RIhSgDvUQY_cOQUbN2rY5IGSX6ei8KBhK0r5woZnwTCRPx&c=oCrkIG6Is3Y1Q-3fBcnsY4AJ0IwiyDMzj3okgRwzDLURILnnZsoBnQ==&ch=3cs2_cAXlCQ8aLM2FB2Px9PgPlYrKVMe_hkBpE-iU-g1rHtTh5_huw==
   a. 9th and 10th September 2024 (talk on 10th September 2024)
   b. Meeting organized by HC Wainwright Investment Banking (https://my.ct.events/preview.aspx?type=attendee&meid=ca094a14-8507-4e5b-

Professor (Dr. Dr.) Michael S. Lebby, B. Eng. (Hons), MBA, Ph.D., D. Eng, Fellow NAI, IEEE, Optica (OSA); C. Eng.
1 Hawthorne St., unit 25a, San Francisco, CA 94105, USA; mobile +1 717 839 7078; drmlebby@gmail.com

ab2c-f2a55c6e6913&jid=e762687f-678d-4ef7-8b88-b9b01f65aa4a&did=6bebbf91-e4f6-4177-b397-6858a60c6b8a&cid=8691ad74-8fa3-4b40-979c-e4e34a999c62). Location: Lotte Palace Hotel, New York City, NY

427) Invited interview with Jose Pozo, CTO Optica, at Lightwave Logic plant facilities, with the interview taking place in LWLG's chemistry and high speed testing laboratories.
   a. 19th September 2024
   b. Lightwave Logic Inc., facilities at Englewood, Colorado
   c. https://www.linkedin.com/feed/update/urn:li:activity:7243920742885543936/

428) Invited talk Corporate Engagement Council, Optical Board of Directors, Strategic planning roadmap
   a. 20th September 2024
   b. Colorado Convention Center, Denver, Colorado
   c. www.optica.com

429) Invited talk ECOC Market Focus, entitled "World class performance for 200Gbps PAM4 and 400Gbps PAM4 lanes from electro-optic polymer modulators." Market Focus Exhibit session, opening talk, at ECOC 2024 conference (https://www.ecocexhibition.com/visit/market-focus/), and (https://www.ecocexhibition.com/visit/market-focus/market-focus-timetable-2024/)
   a. 23rd September 2024
   b. ECOC 2024, Messe convention center, Frankfurt, Germany
   c. Market Focus sessions as part of ECOC Exhibit, session on modules/sub-systems, opening talk

430) Invited fireside chat/interview with David Welch (Board member Infinera, and CEO of Atto-tude), as part of ECOC Market Focus session on modules/sub-systems, with Jose Pozo as host (https://www.ecocexhibition.com/visit/market-focus/market-focus-timetable-2024/)
   a. 23rd September 2024
   b. ECOC 2024, Messe convention center, Frankfurt, Germany
   c. Market Focus sessions as part of ECOC Exhibit, session on modules/sub-systems

431) Invited Chairman and moderator Market Focus, Sessions 1 & 2 Monday, and session 3 Tuesday (https://www.ecocexhibition.com/visit/market-focus/)
   a. 23rd and 24th September 2024
   b. ECOC 2024, Messe convention center, Frankfurt, Germany

432) Chairman and moderator Market Focus as part of ECOC Exhibit, Sessions called components/IC/PIC/Fiber as well as modules/sub-systems (https://www.ecocexhibition.com/visit/market-focus/market-focus-timetable-2024/)

433) Invited interview ECOC TV on Market Focus industry awards on day 2 of ECOC Exhibit with James Page, discussing day 1 market focus and the ECOC Market Focus industry awards ceremony.
   a. 24th September 2024
   b. ECOC 2024, Messe convention center, Frankfurt, Germany

Professor (Dr. Dr.) Michael S. Lebby, B. Eng. (Hons), MBA, Ph.D., D. Eng, Fellow NAI, IEEE, Optica (OSA); C. Eng.
1 Hawthorne St., unit 25a, San Francisco, CA 94105, USA; mobile +1 717 839 7078; drmlebby@gmail.com

c. Interview by ECOC TV James Page, on market focus industry awards.

434) Invited interview ECOC TV on Lightwave Logic, and invited talk entitled "World class performance for 200Gbps PAM4 and 400Gbps PAM4 lanes from electro-optic polymer modulators." of market focus with James Page.

a. 24th September 2024
b. ECOC 2024, Messe convention center, Frankfurt, Germany
c. Interview by ECOC TV James Page, on market focus industry awards.

435) Invited presenter for ECOC awards, as chair of industry awards committee https://www.ecocexhibition.com/industry-awards/ and https://youtu.be/wKRNdD6x-pg

a. 24th September 2024
b. ECOC 2024, Messe convention center, Frankfurt, Germany
c. Product Focus session, ECOC Exhibition Industry Award Winner Announcement

436) Winner: Acceptance of glass trophy for ECOC Industry awards on behalf of Lightwave Logic in the optical hybrid integration category: https://youtu.be/KYYQjVHfDq8 and https://www.ecocexhibition.com/visit/ecoc-exhibition-industry-awards/ and https://opticalconnectionsnews.com/2024/10/ecoc-2024-exhibition-industry-awards/

a. 24th September 2024
b. Product Focus session, ECOC Exhibition Industry Award Winner Announcement
c. ECOC 2024, Messe convention center, Frankfurt, Germany

437) Invited panel moderator for CEO panel at the 1st Annual Meeting of Optica's Global Photonics Economic Forum (GPEF). Panel entited, "CEO Panel", with CEO's from Coherent (retired Chairman/CEO Chuck Vincent Mattera), Jabil (EVP Matt Crowley), Thorsten Mayer (CEO Vanguard representing Anders Linquist, CEO Mycronic), and John Lee, CEO MKS (https://www.optica.org/events/industry_events/2024/global_photonics_economic_forum_2024/schedule/)

a. 1st October 2024
b. Global Photonics Economic Forum (GPEF), FYMCA FYCMA, Palace of Congresses and Exhibitions
Málaga, Spain
c. Optica's GPEF can be found at: https://www.optica.org/events/industry_events/2024/global_photonics_economic_forum_2024/location/ and https://www.optica.org/events/industry_events/2024/global_photonics_economic_forum_2024/about/ . The Global Photonics Economic Forum aims to create a trusted platform for collaboration and innovation, addressing the industry's most pressing challenges and opportunities. With the rapid advancement of photonics technology and its increasing relevance across various sectors, the forum comes at a crucial time. The forum's discussions will explore the complexities introduced by geopolitical tensions, such as those surrounding the Chips Act, and the critical role of photonics in meeting the surging energy demands of artificial intelligence and data centers.

Professor (Dr. Dr.) Michael S. Lebby, B. Eng. (Hons), MBA, Ph.D., D. Eng, Fellow NAI, IEEE, Optica (OSA); C. Eng.
1 Hawthorne St., unit 25a, San Francisco, CA 94105, USA; mobile +1 717 839 7078; drmlebby@gmail.com

438) Invited interview optical connections by Peter Dykes, Editor, Optical connections. Subject: Lightwave Logic history, technology progress and future roadmap opportunities
   a. 4th October 2024
   b. Virtual video interview by Peter Dykes, Editor, Optical connections Magazine
   c. Optical Connections has been providing the fibre optic community with the latest industry news and reports since 2011 via its website, monthly newsletter and now quarterly magazine. Optical connections media provides coverage of market influencing technology advancements, commercial prospects, product developments and editorial insight.

439) Interview with Benzina with Meg Flippin, entitled, "Lightwave Logic presents at European Conference on Optical Communications and takes home award" and can be found at: https://www.benzinga.com/partner/emerging-markets/24/10/41311612/lightwave-logic-presents-at-2024-european-conference-on-optical-communications-takes-hom
   a. Published 14th October 2024
   b. Benzinga
   c. Location: Virtually recorded at the Global Photonics Economic Forum, Malaga, Spain, October 2024

440) Project advisor and panelist: European Commission HORIZON-CL4-2022-DIGITAL-EMERGING-01-57 RETINA EU project number 101135529 for 1st review meeting (virtual meeting).
   a. 21st October 2024
   b. European Commission: https://retina-project.eu
   c. RETINA: the consortium project aims to create a holistic framework for the development of next-generation hardware and software solutions, including innovative LIDAR solutions and CMOS imaging technologies.

441) Industry award "Photonics 100 for 2025" by Europascience https://www.europascience.com/publications/ and Electro Optics Publication (photonics business applications and technology), https://www.electrooptics.com/ . The award is based on exceptional contributions and achievements in the field of photonics as well a level of dedication and innovation that continues to inspire and advance the photonics industry.
   a. 28th October 2024 (published and announced)
   b. Electro Optics Publication https://www.electrooptics.com/
   c. EO publication is a resource for entrepreneurs, engineers and researchers involved in photonics business, technology and applications. It gives access to news of the latest technological developments, trends and opinions in the photonics industry as well as independent, in-depth editorial content. It also provides informed commentary and analysis on topics of interest for those involved in the photonics industry.

442) Invited article from Gazettabyte (www.gazettabyte.com) and editor Roy Rubenstein on the review and reflections from 50th ECOC conference in Frankfurt, October 2024. Article can be located at;

Professor (Dr. Dr.) Michael S. Lebby, B. Eng. (Hons), MBA, Ph.D., D. Eng, Fellow NAI, IEEE, Optica (OSA); C. Eng.
1 Hawthorne St., unit 25a, San Francisco, CA 94105, USA; mobile +1 717 839 7078; drmlebby@gmail.com

https://www.gazettabyte.com/home/2024/10/29/ecoc-2024-industry-reflections-final-part.html

a. 29th October 2024 (published)
b. Gazettabyte publication (https://www.gazettabyte.com)
c. Gazettabyte is a resource for the optical community. It includes in-depth features on datacom and telecom topics as well as information targeted at individuals working in the optical industry.

443) Invited and recorded TV interview: Benzinga All Access Fireside Chat 20 mins inclusive of Q&A) as part of the Dan Leach show (https://www.youtube.com/watch?v=vhbdv8jXmvQ)

a. Recorded TV interview on 12th November 2024 for release 14th November 2024
b. Video interview can be found at: https://www.benzinga.com and https://www.youtube.com/watch?v=vhbdv8jXmvQ and the Dan Leach show/background
c. Location: Virtually recorded in Englewood, Denver, CO.

444) Reviewer: (European Commission) for project Forte which is a project that is developing frequency-agile lasers for photonic sensing. Role of innovation radar expect in addition to technical expert reviewer.

a. 27th November 2025
b. Virtual meeting for the consortium
c. Forte is an EU project to a prototype and mature photonic integrated circuit-based frequency-agile ultra-low noise laser technology, and apply it to the domain of fiber sensing and FMCW LiDAR.
d. https://forte-project.eu

445) Invited interview and article: Optical Connections News, Industry Focus, interview with Peter Dykes, Editor. Article titled, "Electro-optic polymers: A revolution in optical switching" www.opticalconnectionsnews.com

a. 29th November 2024 (for release in Optical Connections News early 2025)
b. Article can be found at www.opticalconnectionsnews.com
c. Location: Virtually recorded in Englewood, Denver, CO.

446) Reviewer (European Commission) for pilot line Medphab

a. 5th December 2024
b. Virtual meeting with consortium and European Commission
c. MedPhab is a pilot line that is focused on bringing to commercial market silicon photonics-based technologies for medical applications. Demonstrator use-cases as prototype products have been selected for the validation of the pilot line technologies covering both *in-vivo* and *in-vitro* domains. The demonstrator cases include: manufacturing a disposable plasmonic-fluidic sensors and a wearable PCI temperature sensor.
d. https://medphab.eu

447) Invited interview and/or podcast with "All things Photonics" from Photonics Spectra and Photonics Media.

a. Published 10th December 2024 (recorded Nov 2024)

Professor (Dr. Dr.) Michael S. Lebby, B. Eng. (Hons), MBA, Ph.D., D. Eng, Fellow NAI, IEEE, Optica (OSA); C. Eng.
1 Hawthorne St., unit 25a, San Francisco, CA 94105, USA; mobile +1 717 839 7078; drmlebby@gmail.com

b. Article can be found at https://www.photonics.com/Podcast/Electro-Optic_Polymers_with_Michael_Lebby_and/p5/pc1/pce89
c. Location: Virtually recorded at Englewood, Denver, CO

448) Reviewer: (European Commission) for project PhotoGeNIC
a. 11th December 2024
b. Virtual meeting for the consortium
c. PhotoGeNiC is an EU project for VCSEL based technology for Germanium wafers. It consists of eight partners from five countries (AT, BE, DE, FR, PL) including highly specialised SMEs, qualified university, advance research organisation and leading industrial companies. The goal is to develop VCSEL industrial technology applying Ge large diameter substrates.
d. https://horizon-photogenic.eu

2025

449) Invited interview with Laser Focus editor Justin Murphy, Editor, LASER FOCUS WORLD, on the subject of photonics, roadmaps, entrepreneurship and intrapreneurship, current trends in the industry and taking technologies from research to volume production. .
a. 8th January 2025
b. Laser Focus world can be found at: https://www.laserfocusworld.com and the magazine at: https://www.laserfocusworld.com/magazine
c. Laser Focus World

450) Invited moderator for Optica's VIP Executive Reception at the Museum of Modern Art (MoMA) as part of Photonics West Conference, San Francisco, 2025 to introduce and chair the question and answer session for Teledyne Technology's CEO Edwin Roks, https://www.optica.org/events/industry_events/2025/vip_executive_reception/
a. 27th January 2025
b. Optica's reception talk can be viewed at: https://www.youtube.com/watch?v=-v9S6-2Lvz8
c. Location: Museum of Modern Art, San Francisco, as part of SPIE's Photonics West conference.

451) Keynote speaker for EPICs EU Projects, Pilot Lines & Innovation Hubs Breakfast event with a talk entitled, "Innovative approaches to commercialize photonics" https://epic-photonics.com/events/eu-projects-innovation-hubs-breakfast-2025/
a. 28th January 2025
b. EPIC Pilot Line projects and innovation hubs meeting
c. Location: W hotel San Francisco, as part of SPIE's Photonics West Conference, 2025

452) Reviewer: (European Commission) for project InSiDe
a. 5th March 2025

Professor (Dr. Dr.) Michael S. Lebby, B. Eng. (Hons), MBA, Ph.D., D. Eng, Fellow NAI, IEEE, Optica (OSA); C. Eng.
1 Hawthorne St., unit 25a, San Francisco, CA 94105, USA; mobile +1 717 839 7078; drmlebby@gmail.com

b. Face to face meeting for the consortium both at Medtronic and Masstricht childrens hospital.
c. InSiDe is an EU project for PIC based technology in the medical field to monitor blood flow and artery stiffness in the human body using long wavelength lasers and silicon photonics. Hospital clinical trials were conducted. It is a follow-on with more clinical trials from an initial CARDIS EU project.
d. http://www.inside-h2020.eu

453) Invited talk Corporate Engagement Council, Optical Board of Directors, Strategic planning roadmap and game changers
a. 22th March 2025
b. Optica Headquarters, Washington DC
c. www.optica.com

454) Invited moderator for Optica's Executive forum CEO panel at OFC 2025 at the Marriot Marquis Hotel in San Francisco, California, (https://www.optica.org/events/industry_events/2025/optica_executive_forum_at_ofc_2025/?utm_source=google&utm_medium=cpc&utm_keyword=&utm_device=c&matchtype=&location=9196351&utm_campaign=&gad_source=1&gbraid=0AAAAABo5sUp5WtBxkL9yvTI8AELbjDYYJ&gclid=CjwKCAjwzMi_BhACEiwAX4YZUNuSg40saecgOBSYspVVYP8nYj04tn80bOqng_CcyuNRUOaentjPChoCYf0QAvD_BwE). The CEO panel consisted of Gary Smith, CEO Ciena; Michael Hurlston, CEO Lumentum; Jim Anderson, CEO Coherent; Hong Hou, CEO Semtech Corporation.
a. 31st March 2025
b. Details of the Executive Forum can be found at: https://www.optica.org/events/industry_events/2025/optica_executive_forum_at_ofc_2025/program/?_gl=1*11x2mf9*_up*MQ..*_gs*MQ..&gclid=CjwKCAjwzMi_BhACEiwAX4YZUNuSg40saecgOBSYspVVYP8nYj04tn80bOqng_CcyuNRUOaentjPChoCYf0QAvD_BwE&gbraid=0AAAAABo5sUp5WtBxkL9yvTI8AELbjDYYJ located at the Marriot Marquis, San Franscisco, California

455) Invited Chair and conference moderator for the 2nd ESS (Executive Strategy Summit) – a global perspective that includes electronics, semiconductors, photonics, sensing with focus a) economic trends and market drivers, b) funding opportunities , c) intellectual property, patents, mergers and acquisitions. https://angel-tech.net/executivestrategysummit/agenda
a. 7th April 2025
b. Brussels, Belgium
c. https://angel-tech.net/executivestrategysummit The conference will delve into key topics such as emerging economic trends, disruptive technologies, market forecasts, and funding strategies. By exploring these areas, attendees will gain a deeper understanding of the market landscape and the implications for their business strategies. Moreover, they will gain valuable insights into how to navigate the complex funding landscape and capitalize on growth opportunities in the CS, PIC and PE industries.

Professor (Dr. Dr.) Michael S. Lebby, B. Eng. (Hons), MBA, Ph.D., D. Eng, Fellow NAI, IEEE, Optica (OSA); C. Eng.
1 Hawthorne St., unit 25a, San Francisco, CA 94105, USA; mobile +1 717 839 7078; drmlebby@gmail.com

456) Invited speaker for 2nd ESS entitled, "European Pilot Lines for Photonics" . https://angel-tech.net/executivestrategysummit/agenda

457) Brussels, Belgium

a. https://angel-tech.net/executivestrategysummit The 10th PIC International conference aims to connect, educate, and inspire the photonic integrated circuit (PIC) industry. The "European Pilot Lines for Photonics" session brings together industry experts to explore the transformative role of pilot lines in driving innovation and fostering a robust ecosystem for commercialization. With Europe at the forefront of photonics research and development, this session will delve into the capabilities and strategic importance of European pilot lines in accelerating the transition from lab-scale breakthroughs to industrial-scale production. Panelists will discuss collaborative efforts, technological advancements, and the challenges of scaling photonics technologies while highlighting the critical role of public-private partnerships in maintaining Europe's competitive edge. This discussion aims to provide insights into how pilot lines are shaping the future of the photonics industry.

458) Invited panel speaker for 2nd ESS panel entitled, "European Pilot Lines for Photonics" with panel members from Fraunhofer HHI, TU Eindhoven, GenusTechnik, IMEC. . https://angel-tech.net/executivestrategysummit/agenda

a. 7th April 2025
b. Brussels, Belgium
c. https://angel-tech.net/executivestrategysummit The 10th PIC International conference aims to connect, educate, and inspire the photonic integrated circuit (PIC) industry. The "European Pilot Lines for Photonics" session brings together industry experts to explore the transformative role of pilot lines in driving innovation and fostering a robust ecosystem for commercialization. With Europe at the forefront of photonics research and development, this session will delve into the capabilities and strategic importance of European pilot lines in accelerating the transition from lab-scale breakthroughs to industrial-scale production. Panelists will discuss collaborative efforts, technological advancements, and the challenges of scaling photonics technologies while highlighting the critical role of public-private partnerships in maintaining Europe's competitive edge. This discussion aims to provide insights into how pilot lines are shaping the future of the photonics industry.

459) Invited conference co-chair (with David Cheskis) for 10th PIC (PIC International Conference) https://picinternational.net/agenda

a. 8th and 9th April 2025
b. Brussels, Belgium
c. https://picinternational.net The 9th PIC International conference aims to connect, educate, and inspire the photonic integrated circuit (PIC) industry. With presentations covering seven sectors, attendees will gain insights into topics like Hybrid PICs, Photonic Integration, PIC Packaging, Quantum PICs, Scaling of PICs, Volume Production, PIC Size and Simulation, PIC Power Efficiency.

Professor (Dr. Dr.) Michael S. Lebby, B. Eng. (Hons), MBA, Ph.D., D. Eng, Fellow NAI, IEEE, Optica (OSA); C. Eng.
1 Hawthorne St., unit 25a, San Francisco, CA 94105, USA; mobile +1 717 839 7078; drmlebby@gmail.com

460) Project advisor and panelist: European Commission HORIZON-CL4-2021-DIGITAL-EMERGING-01-07 LOLIPOP EU project number 101070441 for 3rd review meeting (partially virtual, meeting in EU Commission Brussels).
   a. 10th April 2025
   b. European Commission: https://horizon-de-lolipop.eu
   c. LOLIPOP: Lithium NiObate empowered siLIcon nitride Platform for fragmentation free OPeration in the visible and the NIR. Material technology includes LNOI (lithium niobate on insulator) and TFLN (thin film lithium niobate).

461) Project advisor and panelist: European Commission PhotonHub EU project number/grant agreement 101016665 for 3rd review meeting (virtual). Project call DT-ICT-04-2020 - Photonics Innovation Hubs
   a. 11th and 12th June 2025
   b. European Commission: https://www.photonhub.eu and https://cordis.europa.eu/project/id/101016665
   c. PhotonHub: PhotonHub Europe is a unique European full-service one-stop-shop Photonics Innovation Hub to advance EU competitiveness. Project review included technical assessment, financial, marketing, and operational reviews.

462) Project advisor and panelist: European Commission HORIZON-CL4-2022-DIGITAL-EMERGING-01-57 RETINA EU project number 101135529 for 2nd review meeting (virtual meeting).
   a. 13th June 2025
   b. European Commission: https://retina-project.eu
   c. RETINA: the consortium project aims to create a holistic framework for the development of next-generation hardware and software solutions, including innovative LIDAR solutions and CMOS imaging technologies.

463) Invited speaker for EPICs Integrated photonics applications stage at the Laser World of Photonics (LWoP) 2025 with a talk entitled, "Commercializing integrated photonics with broad applications using EU based pilot lines". https://epic-photonics.com/events/integrated-photonics-applications-stage-at-the-laser-world-of-photonics-2025/
   a. 24th June 2025
   b. Laser World of Photonics photonics forums in integrated photonics applications 24th June 2025 organized by Chair Dr Abdul Rahim from Photon Delta.
   c. Location: International conference (messe) Munich as part of the Laser World of Photonics conference, 24-28th June 2025.

464) Invited speaker for a talk entitled "Nurturing your photonics career", at the University of Oxford, St Hugh's College, and School of Engineering.
   a. 27th June 2025
   b. St. Hughs college, School of Engineering, Oxford University, UK at the request of Engineering optics and photonics professor Martin Booth.

Professor (Dr. Dr.) Michael S. Lebby, B. Eng. (Hons), MBA, Ph.D., D. Eng, Fellow NAI, IEEE, Optica (OSA); C. Eng.
1 Hawthorne St., unit 25a, San Francisco, CA 94105, USA; mobile +1 717 839 7078; drmlebby@gmail.com

c. The talk consisted of career directions for students, post graduates in optics and photonics, and included analysis of entrepreneurial and intrapreneurial industrial and commercial observations.

Professor (Dr. Dr.) Michael S. Lebby, B. Eng. (Hons), MBA, Ph.D., D. Eng, Fellow NAI, IEEE, Optica (OSA); C. Eng.
1 Hawthorne St., unit 25a, San Francisco, CA 94105, USA; mobile +1 717 839 7078; drmlebby@gmail.com