Exhibit 3 – U.S. Patent No. 7,894,385 (Cisco Wireless Mesh Networks with Catalyst and Aironet Access Points)

Cisco Systems, Inc. ("Cisco") has and continues to make, use, sell, offer for sale, and/or import the Cisco Wireless Mesh Network including but not limited to Cisco's Catalyst and Aironet Access Points, with related controllers and software (the "Cisco Accused Products," *see* Exhibit 11), and has infringed and infringes at least Claims 1-3 (the "Asserted Claims") of U.S. Patent No. 7,894,385 (the "'385 Patent").[1]

Cisco has and continues to infringe (literally and/or under the doctrine of equivalents), directly and/or through subsidiaries, agents, representatives, or intermediaries, one or more claims of the '385 Patent by making, using, testing, supplying, causing to be supplied, importing, selling, and/or offering for sale in the United States the Cisco Accused Products.

Cisco directly infringes and has infringed under 35 U.S.C. § 271(a) by making, using, selling, offering for sale and importing the Cisco Accused Products. Cisco further directly infringes and has infringed by testing, setting up, and using Cisco Wireless Mesh Networks on Cisco's campuses and locations throughout the United States,[2] and/or assisting customers in setting up and servicing their Cisco Wireless Mesh Networks. On information and belief, Cisco has partnered with several customers to set up an infringing Cisco Wireless Mesh Network in the United States.

Cisco indirectly infringes and has infringed under 35 U.S.C. § 271(b) by providing specific guidance and instructions to its customers and end users on how to infringe the '385 Patent and make and use the infringing Cisco Wireless Mesh Network. Specifically, Cisco's Wireless Mesh Access Points, Design and Deployment Guides, Technical Assistance Center, Cisco Tech Talks, technical support, Cisco Community, presentations, and technical documentation on Cisco's website identified in the chart *infra* provide design and deployment guidelines for the deployment of, *e.g.*, secure enterprise, campus, and metropolitan Wi-Fi networks within the Cisco Wireless Mesh Network solutions. These guides and instructions specifically teach and describe each and every claim element of Claims 1-3 as demonstrated *infra*, including the necessary components to make and use the infringing Cisco Wireless Mesh Network, and the infringing configuration and operation of the controller, access points, and software that comprise the infringing Cisco Wireless Mesh Network. These guides and instructions were published and distributed by Cisco for its customers for the sole purpose to instruct and encourage its customers to purchase the Cisco components to make and use the infringing Cisco Wireless Mesh Network (and directly infringe literally and/or under the doctrine of equivalents). Cisco has had knowledge of the '385 Patent since 2009 when Cisco executives

[1] The identified Accused Products also include Cisco's products, services, and systems that are considered sold or related to the infringement in the United States and subject to a reasonable royalty according to the Federal Circuit's decisions in *Carnegie Mellon Univ. v. Marvell Tech. Group. Ltd.*, 807 F.3d 1283 (Fed. Cir. 2015), *Cal. Inst. of Tech. v. Broadcom Ltd.*, 25 F.4th 976 (Fed. Cir. 2022), and *Brumfield v. IBG LLC*, 97 F.4th 854 (Fed. Cir. 2024).

[2] *See, e.g.*, https://www.cisco.com/c/dam/en_us/about/ciscoitatwork/downloads/ciscoitatwork/pdf/Richardson_Topology.pdf.

met with MeshDynamics to discuss partnering opportunities and the application that would result in the ’385 Patent. MeshDynamics further put Cisco on actual notice of its infringement by its making, using, selling, offering for sale and importing the Cisco Accused Products that comprise the Cisco Wireless Mesh Networks in 2022. Cisco has knowingly and intentionally induced its customers to infringe the ’385 Patent, or in the alternative was willfully blind to the ’385 Patent and the infringement, following the MeshDynamics meeting in 2009.

Cisco further indirectly infringes and has infringed under 35 U.S.C. § 271(c) by supplying the components used in the infringing Cisco Wireless Mesh Network, with knowledge of its infringing use (as discussed *supra*) and without substantial non-infringing uses. Further, the Cisco Accused Products were designed specifically to be used in a manner that infringes the ’385 Patent. Cisco Accused Products come enabled as a mesh access points and automatically connect to the controller to establish an infringing wireless mesh network. Certain Cisco access points and proprietary software are particularly suited for Cisco’s Wireless Mesh Network, and Cisco provides specific instructions and guides on how to make and use the Cisco Wireless Mesh Network using the Cisco Accused Products. As a result of Cisco’s selling and/or offering for sale of the Cisco Accused Products to other entities, the other entities use these products for their intended purpose and according to their instructions with the result that such entities directly infringe the ’385 Patent, literally or under the doctrine of equivalents, for the reasons stated *infra*. Cisco’s Accused Products are specially made and adapted for this use in an infringing manner, are not staple articles of commerce, and do not have substantial non-infringing uses.

MeshDynamics asserts that the Cisco Accused Products literally infringed and continue to infringe the Asserted Claims of the ’385 Patent. With respect to any claim limitation that may be found not to be literally infringed, MeshDynamics contends in the alternative that Cisco Accused Products infringed such claim limitations under the doctrine of equivalents and that any claim element not found to be literally met is equivalently met because any difference between the claim limitation and Cisco Accused Products is not a substantial difference. Accordingly, MeshDynamics contends that if any Cisco Accused Products is found not to have infringed any Asserted Claims literally it is nevertheless embodied by Cisco Accused Products under an operative doctrine of equivalents test (*e.g.*, function-way-result or insubstantial difference).

The below chart presents MeshDynamics’s preliminary infringement analysis of Cisco Accused Products based solely on public information. MeshDynamics has not received any discovery from Cisco, including any confidential information or source code demonstrating the operation and structure of the Cisco Accused Products. All information contained in this disclosure is the result of publicly available information regarding the Cisco Accused Products. Based on these circumstances, MeshDynamics presents these infringement allegations reflecting its analysis of the facts

presently known to it. To the best of MeshDynamics's knowledge, information, and belief, formed after an inquiry that is reasonable under the circumstances, the information contained in this disclosure is correct.

Certain information about Cisco Accused Products is not available without discovery, such as proprietary source code, documents, and deposition testimony, from Cisco. Accordingly, MeshDynamics reserves the right to supplement and/or amend this infringement contention claim chart as new information becomes available and as MeshDynamics has the opportunity to review Cisco document productions, including information related to the implementation of Cisco Accused Products, relationships with other parties who participated or contributed to the operation of Cisco Accused Products, and/or elements of Cisco Accused Products that cannot be fully examined based solely on publicly available information. Infringement investigations are ongoing, and MeshDynamics anticipates that additional facts and relevant documents will be uncovered and disclosed that create cause for supplementation and/or amendment.

Claim 1	Cisco's Wireless Mesh Network with Ultra Reliable Wireless Backhaul
1.pre. A method of operating a mesh network having a plurality of mesh nodes, comprising:	Cisco's Wireless Mesh Network with Ultra Reliable Wireless Backhaul ("URWB") comprises a method of operating a mesh network having a plurality of mesh nodes (*e.g.*, Cisco Catalyst Heavy Duty Access Points and Industrial Wireless Access Points). Cisco's Wireless Mesh Network supports mobile access points and routers. Cisco offers access points designed for mobile use cases. These access points ("APs") can be used in various settings, including vehicles like trains, buses, or emergency response vehicles. Cisco's Ultra Reliable Wireless Backhaul ("URWB") works with both fixed infrastructure and mobile assets, *e.g.*, moving vehicles. URWB can be implemented in a mesh topology, where each vehicle equipped with a URWB device acts as a node in the network. The vehicle can be equipped with Catalyst access points, including the Cisco Catalyst Heavy Duty and Industrial Wireless products. **URWB supports different architectures:** • **Mobility:** Connectivity between radios deployed on vehicles and fixed structures or just between vehicles is generally used to connect Automated Guided Vehicles (AGVs), autonomous mobile robots (AMRs), trains, and other moving assets. • **Fixed infrastructure:** Connectivity between radios attached to fixed structures – poles, towers, buildings, etc. – is generally used to support wireless backhaul, physical surveillance, and more. The layout and data communication can be implemented through Point-To-Point (PTP), Point-To-Multipoint (PTMP), and mesh topologies.

Source: https://www.cisco.com/c/en/us/products/collateral/wireless/ultra-reliable-wireless-backhaul/ultra-wireless-backhaul-so.html

URWB allows multiple Catalyst APs to wirelessly connect and form a mesh network. One AP is designated as the root or parent (connected to the wired LAN), and others become mobile mesh nodes (connected wirelessly).

Achieving low latency with Cisco Ultra-Reliable Wireless Backhaul

Cisco Ultra-Reliable Wireless Backhaul (Cisco URWB) is a wireless WAN backhaul technology derived from Wi-Fi and designed to serve mobile network environments such as trains, buses, subways, remotely controlled cranes, AGVs, and AMRs. It can also be deployed as a fixed infrastructure, providing backhaul where fiber can't go or is too expensive. Cisco URWB is especially well suited for connectivity between mobile networks (such as vehicles) and a fixed infrastructure, optimized to quickly move the mobile device's communications within a fixed wireless infrastructure before breaking. Cisco URWB networks can be designed for Layer 2 use cases (such as AGVs or AMRs in a distribution center) as well as Layer 3 use cases (such as subways), allowing network mobility through multiple locations a few miles apart.

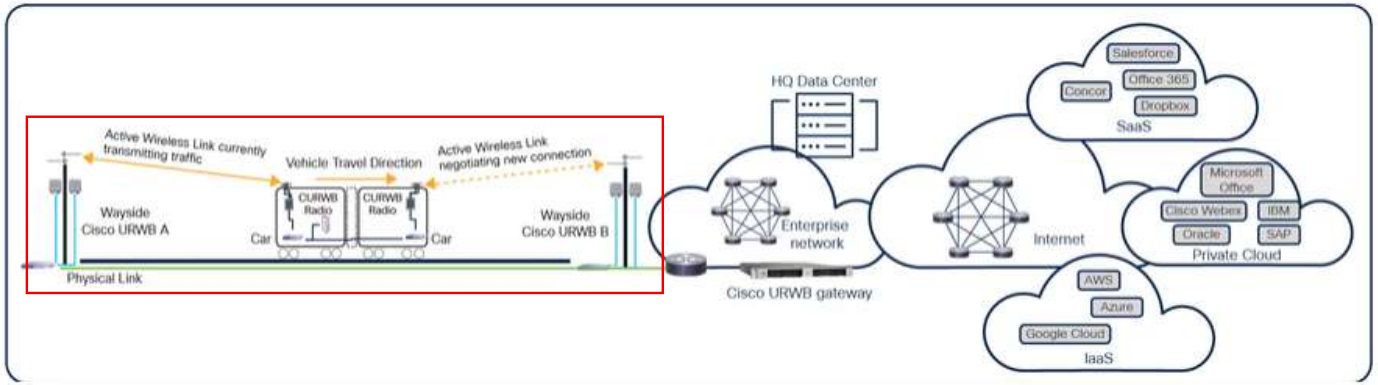

Figure 6.

Cisco Ultra Reliable Wireless Backhaul topology

Source: https://www.cisco.com/c/en/us/products/collateral/wireless/arch-end-to-end-low-latency-wireless-networks.html

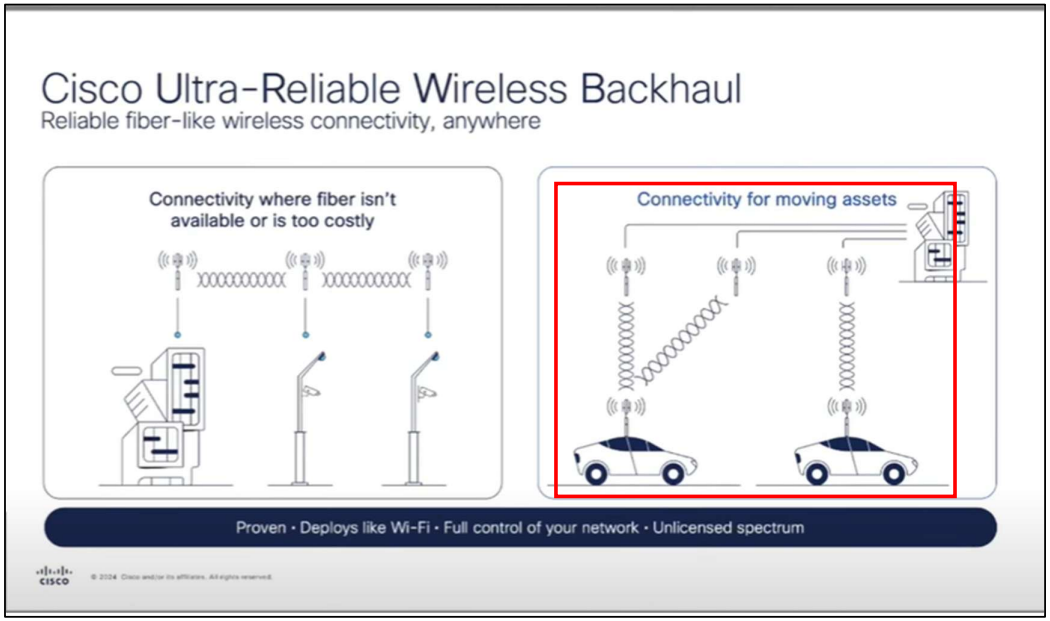

Source: https://www.youtube.com/watch?v=g9iJUmjy9Ug&list=PLinuRwpnsHacte6oSjeABKeotKLfPzNBN&t=86s

	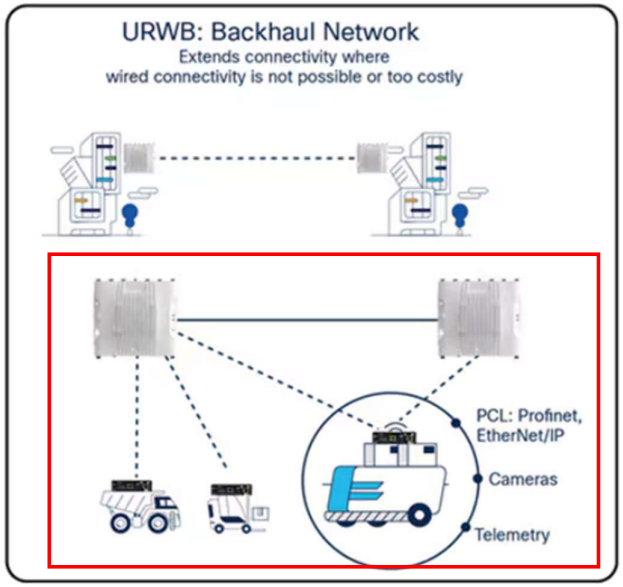 Source: https://www.cisco.com/c/en/us/products/collateral/wireless/ultra-reliable-wireless-backhaul/elevating-wifi-intelligent-reliable-seamless-connectivity-so.html
1.a. for at least one mesh node of the mesh network, scanning a Radio Frequency (RF) environment using a dedicated scanning radio to determine a new potential parent mesh node for connecting with said at least one mesh node;	Cisco's Wireless Mesh Network with Ultra Reliable Wireless Backhaul ("URWB") comprises a method of operating a mesh network having a plurality of mesh nodes (*e.g.*, Cisco Catalyst Heavy Duty and Industrial Wireless Access Points) for at least one mesh node of the mesh network, scanning a Radio Frequency (RF) environment using a dedicated scanning radio to determine a new potential parent mesh node for connecting with said at least one mesh node. In URWB-enabled access points, such as the multi-radio IW9167E, there is a dedicated radio that can be used for scanning and monitoring the environment. Cisco's access point radio(s) can be a "dedicated" when being used for the purpose of scanning. This scanning radio can search for root or parent mesh nodes and optimize mesh path selection without disrupting client or backhaul traffic. URWB must know the boundary of a root or parent access point that it is currently connected to, and that the direction of a moving AP is soon going to lose that connection. This radio can scan ahead for alternative parent mesh points without dropping the current link.

Cisco Industrial Wireless Portfolio supporting URWB

Table 1. Specifications summary for multi-radio Cisco Catalyst® Industrial Wireless products

	Catalyst IW9165E Rugged Access Point and Wireless Client	Catalyst IW9165D Heavy Duty Access Point	Catalyst IW9167I Heavy Duty Access Point	Catalyst IW9167E Heavy Duty Access Point	Catalyst IW9167E-HZ Heavy Duty Access Point
URWB mode	Standalone, Integrated with Wi-Fi technology	Standalone, Integrated with Wi-Fi technology	Integrated with Wi-Fi technology	Standalone, Integrated with Wi-Fi technology	Standalone, Integrated with Wi-Fi technology
Technology	2x2 dual radio up to 160 MHz	2x2 dual radio up to 160 MHz	4x4 tri-radio up to 160 MHz	4x4 tri-radio up to 160 MHz	4x4 tri-radio up to 160 MHz

Source: https://www.cisco.com/c/en/us/products/collateral/wireless/ultra-reliable-wireless-backhaul/ultra-wireless-backhaul-so.html

Overview of Fluidity frequency scan

Fluidity frequency scan is designed for scenarios involving high-density mobility environments using multiple frequencies on the infrastructure side to reduce self-interference and improve wireless channel capacity and performance. It helps to ensure continuous and seamless connectivity as these devices move across different network areas, facilitating smooth transitions between APs. When the current signal strength is weak, the device starts searching for a frequency with a better signal to maintain a stable connection. This feature is applicable in all high-density mobility environments, such as train-to-ground, mining, and port terminals.

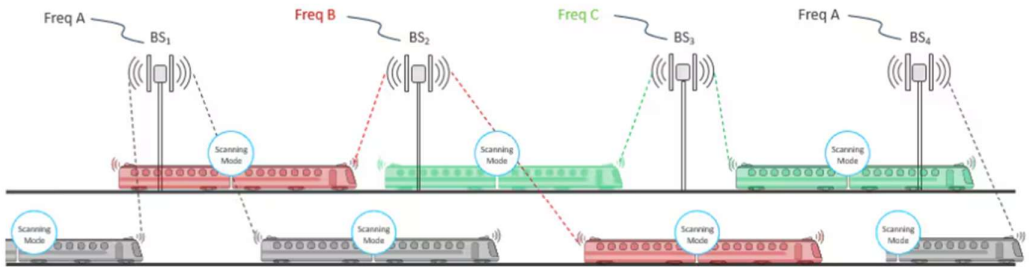

For effective frequency scanning, a mobile device typically requires at least two radios:

- Radio 1: Maintains the current connection with the network.
- Radio 2: Performs scanning for better available frequencies without disrupting the existing connection on Radio 1.

Source: https://www.cisco.com/c/en/us/td/docs/wireless/outdoor_industrial/iw9167/software/configuration/m-cisco-catalyst-iw9167e-iw9165e-and-iw9165dh-heavy-duty-access-point-cisco-ultra-reliable-wireless-backhaul-software-configuration-guide/m_auto-or-frequency-scan.html

Scanning radio	Dedicated radio for monitoring air space to perform advanced RF spectrum analysis and deliver features such as Cisco CleanAir®, Wireless Intrusion Prevention System (WIPS), etc.

Source: https://www.cisco.com/c/en/us/products/collateral/wireless/catalyst-iw9167-series/cat-iw9167e-heavy-duty-ap-ds.html

The GNSS/BLE scanning radio helps to determine a new potential parent mesh node for connecting by enabling all mesh nodes to share a precise clock, allowing coordinated time-slot communication, and improves how APs connect and operate in mesh. This radio enables precise AP location and time sync for Time Division Multiple Access ("TDMA") for URWB and helps mesh APs coordinate in time and space, which is critical for scheduling and optimizing the mesh.

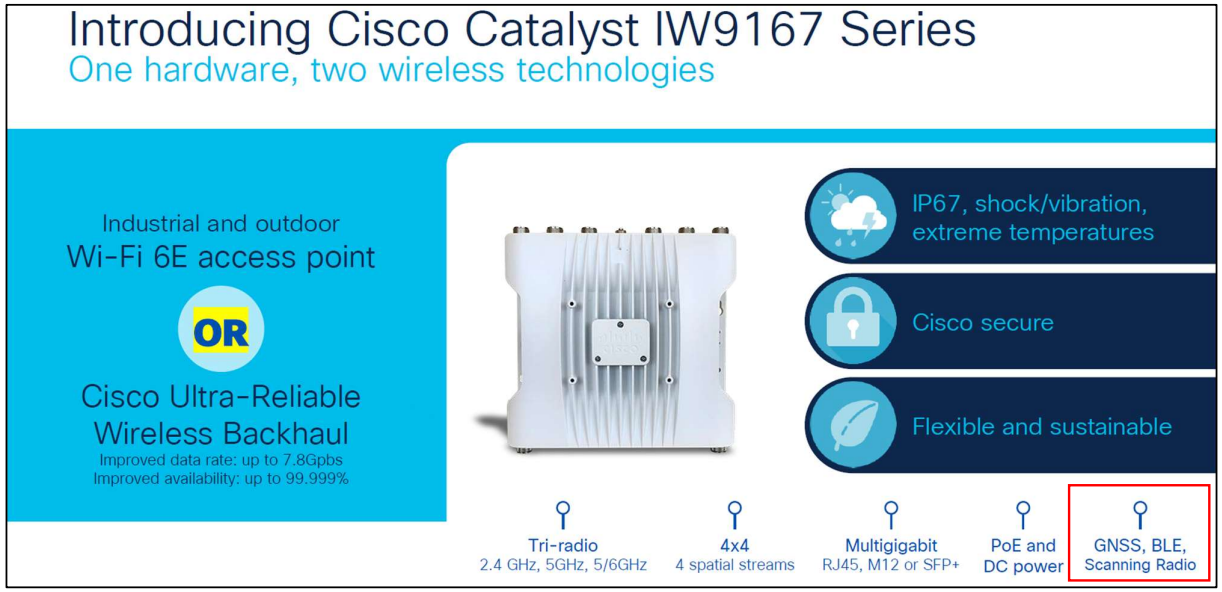

Source: https://www.ciscolive.com/c/dam/r/ciscolive/global-event/docs/2022/pdf/BRKEWN-2832.pdf

If this claim element is not literally infringed, it is infringed under the doctrine of equivalents. Cisco's Catalyst Heavy Duty and Industrial Wireless Access Points perform the same function of determining a new potential parent or root mesh node for connecting with said at least one mesh node in the same way by using radios to regularly scan for and track potential new parents or roots in an RF environment and achieves the same result by determining the best parent or root mesh node for optimal network performance and to maintain connectivity while in motion. Moreover, any differences between the functionality of the Cisco Accused Products and the claimed element are insignificant or insubstantial because Cisco's URWB networks deploy multiple dual-radio (or tri-radio) mesh access points to find the best path through the network for data traffic and to maintain connectivity when in motion by scanning for new parents.

	A person skilled in the relevant art would consider any difference between the claimed invention and the Cisco Accused Products to be minor and insubstantial. MeshDynamics asserts that this claim element is a software limitation. Pursuant to P.R. 3-1(g) and Judge Schroeder's standard discovery order, MeshDynamics will identify what Cisco source code satisfies this limitation 30 days after Cisco's complete production of source code or at such other time as the parties may agree to.
1.b. wherein said at least one mesh node includes, in addition to said scanning radio, at least two relay radios in each mesh element and wherein said scanning radio and said at least two relay radios operate on different non-interfering channels;	Cisco's Wireless Mesh Network with Ultra Reliable Wireless Backhaul ("URWB") comprises a method of operating a mesh network having a plurality of mesh nodes (*e.g.*, Cisco Catalyst Heavy Duty and Industrial Wireless Access Points) wherein said at least one mesh node includes, in addition to said scanning radio, at least two relay nodes in each mesh element and wherein said scanning radio and said at least two relay nodes operate on different non-interfering channels. URWB also uses dual backhaul radios operating on different non-interfering channels (typically 5 GHz or 4.9 GHz bands) from the scanning radio(s), with MIMO (multiple-input, multiple-output) antennas. There is also a 2.4 GHz radio. Each of the 2.4GHz and 5GHz (or 6GHz) bands have several different non-interfering channels for radio operation. For instance, channels 1, 6 and 11 on the 2.4 GHz band do not interfere. There are 24 non-overlapping channels for 5-GHz, offering more flexibility and less congestion. The APs use at least the 2.4 GHz, 5 GHz, and/or 6 GHz bands to provide comprehensive monitoring and use of the wireless spectrum for various purposes, at different channels.

Cisco Industrial Wireless Portfolio supporting URWB

Table 1. Specifications summary for multi-radio Cisco Catalyst® Industrial Wireless products

	Catalyst IW9165E Rugged Access Point and Wireless Client	Catalyst IW9165D Heavy Duty Access Point	Catalyst IW9167I Heavy Duty Access Point	Catalyst IW9167E Heavy Duty Access Point	Catalyst IW9167E-HZ Heavy Duty Access Point
URWB mode	Standalone, Integrated with Wi-Fi technology	Standalone, Integrated with Wi-Fi technology	Integrated with Wi-Fi technology	Standalone, Integrated with Wi-Fi technology	Standalone, Integrated with Wi-Fi technology
Technology	2x2 dual radio up to 160 MHz	2x2 dual radio up to 160 MHz	4x4 tri-radio up to 160 MHz	4x4 tri-radio up to 160 MHz	4x4 tri-radio up to 160 MHz

Frequency	4.9 GHz, 5.1 to 6.9 GHz*	4.9 GHz, 5.1 to 6.9 GHz*	2.4 GHz, 4.9 GHz, 5.1 to 6.9 GHz*	2.4 GHz, 4.9 GHz, 5.1 to 6.9 GHz*	2.4 GHz, 4.9 GHz, 5.1 to 6.9 GHz*

Source: https://www.cisco.com/c/en/us/products/collateral/wireless/ultra-reliable-wireless-backhaul/ultra-wireless-backhaul-so.html

Overview of Cisco Catalyst IW9167E and IW9165 Access Points

Overview of Cisco Catalyst IW9167E

The Catalyst IW9167E access point provides reliable wireless connectivity for mission-critical applications in a state-of-the art platform to deliver a network that is more reliable and secure, with higher throughput, more capacity, and less device interference. The Catalyst IW9167E is Cisco's first outdoor Wi-Fi 6E ready Access Point supporting tri-radio and tri-band (2.4/5/6 GHz bands). The Catalyst IW9167E can operate in Wi-Fi (control and provisioning of wireless access points (CAPWAP)) mode or Ultra-Reliable Wireless Backhaul (URWB) mode and URWB software on Catalyst IW9167E designed to support the Cisco style parser.

Source: https://www.cisco.com/c/en/us/td/docs/wireless/outdoor_industrial/iw9167/software/configuration/m-cisco-catalyst-iw9167e-iw9165e-and-iw9165dh-heavy-duty-access-point-cisco-ultra-reliable-wireless-backhaul-software-configuration-guide/chapter-1.html

If this claim element is not literally infringed, it is infringed under the doctrine of equivalents. Cisco's Catalyst Heavy Duty and Industrial Wireless Access Points perform the same function of determining a new potential parent mesh node for connecting with at least one mesh node in the same way by using radios to regularly scan for and track potential new parents in an RF environment, with radios operating at different frequencies and channels, and achieves the same result by determining the best parent mesh node for optimal network performance and to maintain connectivity when in motion by scanning for new parents, while maintaining a separate backhaul. Moreover, any differences between the functionality of the Cisco Accused Products and the claimed element are insignificant or insubstantial because Cisco's mesh networks using URWB deploy multiple dual-radio (or tri-radio) mesh access points to find the best path through the network for data traffic by scanning for new parents to maintain connectivity and while maintaining a separate

	backhaul. A person skilled in the relevant art would consider any difference between the claimed invention and the Cisco Accused Products to be minor and insubstantial. MeshDynamics asserts that this claim element is a software limitation. Pursuant to P.R. 3-1(g) and Judge Schroeder's standard discovery order, MeshDynamics will identify what Cisco source code satisfies this limitation 30 days after Cisco's complete production of source code or at such other time as the parties may agree to.
1.c. wherein said at least one mesh node is moving sufficiently rapidly that it may lose connectivity with its current parent mesh node, and wherein said dedicated scanning radio is utilized for discovery of potential new parent nodes and sampling of discovered potential new parent nodes is performed by an uplink relay radio of said at least one mesh node;	Cisco's Wireless Mesh Network comprises a mesh network having a plurality of mesh nodes (*e.g.*, Cisco Catalyst Heavy Duty and Industrial Wireless Access Points) wherein said at least one mesh node is moving sufficiently rapidly that it may lose connectivity with its current mesh node, and wherein said dedicated scanning radio is utilized for discovery of potential new parent and sampling of discovered potential new parent nodes is performed by an uplink relay radio of said at least one mesh node. Cisco's Wireless Mesh Network supports mobile access points and routers. Cisco offers access points designed for mobile use cases. These APs can be used in various settings, including vehicles like trains, buses, or emergency response vehicles. Cisco's Ultra Reliable Wireless Backhaul ("URWB") works with both fixed infrastructure and mobile assets, *e.g.* moving vehicles. URWB can be implemented in a mesh topology, where each vehicle equipped with a URWB device acts as a node in the network ("at least one mesh node is moving sufficiently rapidly"). The vehicle can be equipped with Catalyst access points, including the Cisco Catalyst Heavy Duty and Industrial Wireless products. **URWB supports different architectures:** • **Mobility:** Connectivity between radios deployed on vehicles and fixed structures or just between vehicles is generally used to connect Automated Guided Vehicles (AGVs), autonomous mobile robots (AMRs), trains, and other moving assets. • **Fixed infrastructure:** Connectivity between radios attached to fixed structures – poles, towers, buildings, etc. – is generally used to support wireless backhaul, physical surveillance, and more. The layout and data communication can be implemented through Point-To-Point (PTP), Point-To-Multipoint (PTMP), and mesh topologies. Source: https://www.cisco.com/c/en/us/products/collateral/wireless/ultra-reliable-wireless-backhaul/ultra-wireless-backhaul-so.html As discussed *supra* claim element 1.a, Cisco Catalyst Heavy Duty Access Points and Industrial Wireless Access Points comprise a "scanning radio is utilized for discovery of potential new parent nodes" and to monitor the environment. URWB delivers a "make-before-break" handover, enabling moving vehicles to negotiate and establish a reliable parent connection ("sampling" using its uplink radio) with the next access point along their path before losing connectivity to

the current one. The availability of at least one AP is ensured ("sampling") before a handoff is made using an uplink radio. *See also infra* claim 1.d.

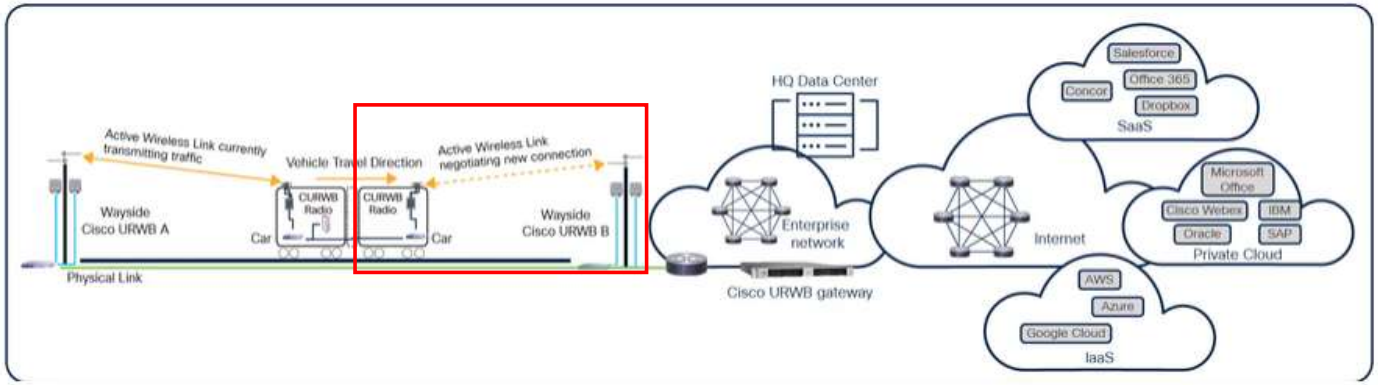

Figure 6.

Cisco Ultra Reliable Wireless Backhaul topology

Source: https://www.cisco.com/c/en/us/products/collateral/wireless/arch-end-to-end-low-latency-wireless-networks.html; *see also* https://www.cisco.com/c/dam/en/us/td/docs/wireless/ultra-reliable-wireless-backhaul/device-software/cisco-urwb-fluidity-specs-usermanual.pdf

If this claim element is not literally infringed, it is infringed under the doctrine of equivalents. Cisco's Catalyst Heavy Duty and Industrial Wireless Access Points perform the same function of determining a new potential parent mesh node for connecting with at least one mesh node in the same way by using radios to regularly scan for and track potential new parents in an RF environment, with radios operating at different frequencies and channels, and achieves the same result by determining the best parent mesh node for optimal network performance and to maintain connectivity when in motion by scanning for new parents, while maintaining a separate backhaul. Moreover, any differences between the functionality of the Cisco Accused Products and the claimed element are insignificant or insubstantial because Cisco's mesh networks using URWB deploy multiple dual-radio (or tri-radio) mesh access points to find the best path through the network for data traffic by scanning for new parents to maintain connectivity when in motion and while maintaining a separate backhaul. A person skilled in the relevant art would consider any difference between the claimed invention and the Cisco Accused Products to be minor and insubstantial.

	MeshDynamics asserts that this claim element is a software limitation. Pursuant to P.R. 3-1(g) and Judge Schroeder's standard discovery order, MeshDynamics will identify what Cisco source code satisfies this limitation 30 days after Cisco's complete production of source code or at such other time as the parties may agree to.
1.d. wherein while said at least one mesh node samples potential new parent nodes, packets to be sent to said at least one mesh node from its current parent node are buffered by the current parent node, and packets to be sent from said at least one mesh node to its current parent are buffered by said at least one mesh node; and	Cisco's Wireless Mesh Network comprises a mesh network having a plurality of mesh nodes (*e.g.*, Cisco Catalyst Heavy Duty and Industrial Wireless Access Points) wherein while said at least one mesh node samples potential new parent nodes, packets to be sent to said at least one mesh node from its current parent node are buffered by the current parent node, and packets to be sent from said at least one mesh node to its current parent are buffered by said at least one mesh node. URWB delivers a "make-before-break" handover, enabling moving vehicles to negotiate and establish a reliable connection ("sampling") with the next access point along their path before losing connectivity to the current one. When the mesh node uplink is negotiating, on information and belief, the parent node or current node holds the packets ("buffered") so no packets are lost during the handoff. As discussed *infra* claim 1.e, receiving and transmission times are coordinated and on information and belief, packets are buffered at the APs during times not slotted for receiving and transmission. 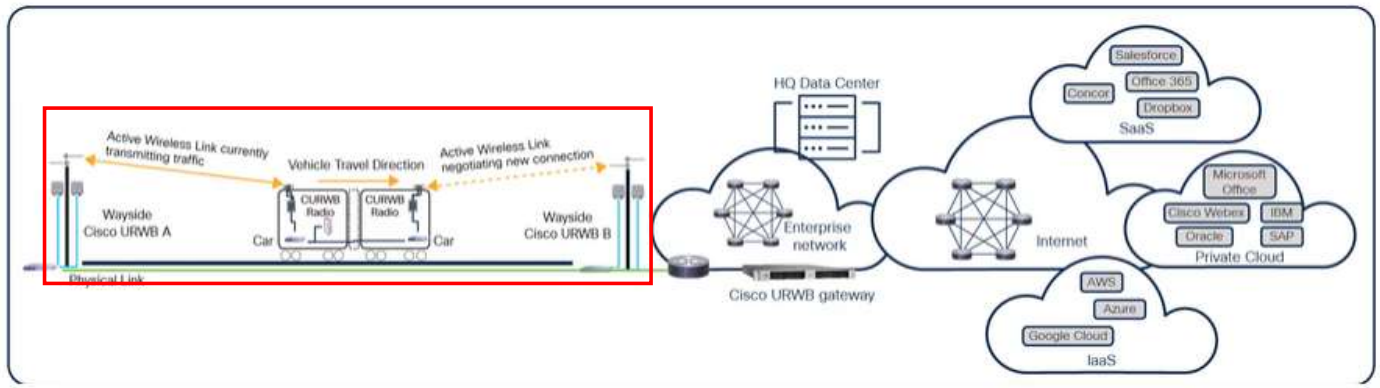 **Figure 6.** Cisco Ultra Reliable Wireless Backhaul topology Source: https://www.cisco.com/c/en/us/products/collateral/wireless/arch-end-to-end-low-latency-wireless-networks.html

	If this claim element is not literally infringed, it is infringed under the doctrine of equivalents. Cisco's Catalyst Heavy Duty and Industrial Wireless Access Points perform the same function of sampling or negotiating with other nodes to determine a new potential parent mesh node for maintaining a network connection in the same way by using radios to regularly scan for potential new parents in an RF environment, while maintaining the traffic flow to the old parent before transfer to a new potential parent, and achieves the same result of ensuring the seamless transfer of data flow ("make-before-break" handover) and a good user experience without degrading performance. Moreover, any differences between the functionality of the Cisco Accused Products and the claimed element are insignificant or insubstantial because Cisco's mesh networks with URWB must solicit and learn all of the available APs to maintain a connection while moving. The "make-before-break" handover, like buffering, ensures that no packets are lost in the transition to a new RAP when moving. A person skilled in the relevant art would consider any difference between the claimed invention and the Cisco Accused Products to be minor and insubstantial. MeshDynamics asserts that this claim element is a software limitation. Pursuant to P.R. 3-1(g) and Judge Schroeder's standard discovery order, MeshDynamics will identify what Cisco source code satisfies this limitation 30 days after Cisco's complete production of source code or at such other time as the parties may agree to.
1.e. wherein sampling times are coordinated among multiple mesh nodes having a common current parent node whereby the common current parent node sends tokens to each of its children in a round-robin manner.	Cisco's Wireless Mesh Network comprises a mesh network having a plurality of mesh nodes (*e.g.*, Cisco Catalyst Heavy Duty and Industrial Wireless Access Points) wherein sampling times are coordinated among multiple mesh nodes having a common current parent node whereby the common current parent node sends tokens to each of its children in a round-robin manner. The current parent or fixed root access point (RAP) hosts URWB functions. The RAP contains intelligence to monitor moving node signal quality, advertise its availability and quality metrics (*e.g.*, SNR, latency), accept or reject roaming requests, and recalculate schedules and time slots dynamically. Mesh links are reserved, scheduled and optimized in real time to ensure stability even as one node moves. This is how URWB can deliver zero loss and seamless handoffs ("make-before-break" handover) in complex mobile use cases. Cisco®'s Ultra-Reliable Wireless Backhaul (URWB) technology addresses these complex fixed and mobile use cases, delivering advantages across the network: • Provides multigigabit high-throughput performance, connects moving assets, and links locations that need temporary connectivity. • Delivers ultra-low latency, zero loss, and seamless handoffs. • Extends 802.11 technology and uses unlicensed spectrum, reducing costs and complexity and making it easy to deploy pretty much anywhere. • Since URWB is based on the 802.11 standard, IT and OT teams find it easy to understand and deploy.

Source: https://www.cisco.com/c/en/us/products/collateral/wireless/ultra-reliable-wireless-backhaul/ultra-wireless-backhaul-so.html

On information and belief, the RAPs utilizing URWB use a Time Division Multiple Access ("TDMA") or TDMA-like mechanism (using a similar Cisco proprietary protocol, such as "Fluidity" or Fluidmax mode, or Cisco's Multiprotocol Label Switching (MPLS) or Multipath Operations (MPO)). TDMA is a wireless scheduling method where the available airtime is divided into fixed time slots, and each device is assigned a slot for transmission ("sampling times are coordinated among multiple mesh nodes having a common current parent node"). The RAP acts like a TDMA scheduler and coordinates a unique time slot for each node for transmitting or receiving. The RAP ensures all nodes are time-synced (like a clock, "sends tokens to each of its children in a round-robin manner"), so they transmit only in their slots. All participating nodes—including mobile and fixed APs—are time-synchronized. This allows both old and new access points to coordinate when the mobile node will talk/listen without interference.

Configuring URWB Radio Mode

The wireless interfaces are configured to operate in a specific mode, or you can disable it. Once you configure the Radio mode, the device starts working as a Fluidity or Fixed infrastructure.

The following table shows the configuration of Radio mode on the device:

Table 1. Radio Mode Configuration

Radio Role	Radio Mode	Description
Fixed Infrastructure	Fixed Fluidmax primary Fluidmax secondary	P2P mode (point to point) P2MP (point to multipoint) mode (Fluidmax) and P2MP P2MP mode (Fluidmax) and P2MP
Mobility AP	Fluidity	Mobility mode
Mobility Client	Fluidity	Mobility mode

Source: https://www.cisco.com/c/en/us/td/docs/wireless/outdoor_industrial/iw9167/software/configuration/m-cisco-catalyst-iw9167e-iw9165e-and-iw9165dh-heavy-duty-access-point-cisco-ultra-reliable-wireless-backhaul-software-configuration-guide/m-configuring-curwb-radio-mode.html; *see also* https://community.cisco.com/t5/wireless-mobility-

knowledge-base/time-division-multiple-access-tdma/ta-p/3112403; https://www.cisco.com/c/dam/en/us/td/docs/wireless/ultra-reliable-wireless-backhaul/outdoor-devices/cisco-urwb-fm3200base-usermanual.pdf (referencing Fluidmax TDMA mode)

URWB ensures that a moving vehicle establishes a reliable connection with the next access point before losing connectivity to the current one. On information and belief, this transition relies on managing connection handoffs efficiently and coordination by the parent node, at least conceptually similar to how TDMA would allocate time slots to different users for uninterrupted communication. URWB's predictable communication, redundant paths and MPO, and dedicated time for packet transmission are TDMA-like approaches.

- URWB uses a specialized implementation of the Multiprotocol Label Switching (MPLS)-over-wireless links, created to overcome the limits of standard wireless protocols when transmitting any IP-compatible traffic with very low latency in a mobility context.
- URWB delivers a "make-before-break" handover, enabling moving vehicles to establish a reliable connection with the next access point along their path before losing connectivity to the current one.
- With Multipath Operations (MPO) technology, URWB can deliver uninterrupted connectivity to fast-moving devices by sending high-priority packets via redundant paths on uncorrelated frequencies at the same time to multiple access points. It can duplicate protected traffic up to eight times, exploiting time, spatial, and frequency diversity. This functionality, combined with cutting edge hardware capability, can further reduce latency and improve reliability, addressing both interference and hardware failures.

Source: https://www.cisco.com/c/en/us/products/collateral/wireless/ultra-reliable-wireless-backhaul/ultra-wireless-backhaul-so.html

Furthermore, URWB discloses this element because Cisco's URWB has the ability to switch to a plurality of operating modes (*e.g.*, fixed and fluidity) that requires the root node to coordinate when nodes should sample the presence of other candidate root nodes. For example, on information and belief, the root node would inform (*i.e.*, send a "token") to a node operating in fixed mode to perform sampling at a relatively slow rate and the root node would inform (*i.e.*, send a "token") to a node operating in fluidity mode to sample at a higher rate (because of the higher mobility use case, such as a train). This would be done when initially configuring a node for its mode of operation and, on information and belief, on an ongoing basis. The root node would send this information to the nodes (fixed and fluidity) separately (*i.e.*, "round-robin manner"). Also, with TDMA, the specific time slot made available for a particular node to transmit can be understood to be a "token," and the rotating availability of time slots for different nodes would be considered being done in a "round-robin manner."

	If this claim element is not literally infringed, it is infringed under the doctrine of equivalents. Cisco's Heavy Duty and Industrial Wireless Access Points perform the same function of seamless parent node switching in a mobile mesh network in the same way by coordinating transmissions and achieves the same result of ensuring the seamless transfer of data flow ("make-before-break" handover) and a good user experience without degrading performance. Moreover, any differences between the functionality of the Cisco Accused Products and the claimed element are insignificant or insubstantial. URWB time slots or "make-before-break" handover functionally ensure orderly, collision-free and uninterrupted communication. The time slot or transition serves the same function of preventing collisions and giving each node a clear opportunity and permission to transmit. The time slot or handover is also assigned and centrally controlled by the RAP, such that just like a token, only the node whose time slot or transition is active can transmit. A person skilled in the relevant art would consider any difference between the claimed invention and the Cisco Accused Products to be minor and insubstantial. MeshDynamics asserts that this claim element is a software limitation. Pursuant to P.R. 3-1(g) and Judge Schroeder's standard discovery order, MeshDynamics will identify what Cisco source code satisfies this limitation 30 days after Cisco's complete production of source code or at such other time as the parties may agree to.
Claim 2	**Cisco's Wireless Mesh Network with Ultra Reliable Wireless Backhaul**
2.pre. A mesh network comprising: a plurality of mesh nodes;	Cisco's Wireless Mesh Network with Ultra Reliable Wireless Backhaul ("URWB") comprises a mesh network having a plurality of mesh nodes (*e.g.*, Cisco Catalyst Heavy Duty Access Points and Industrial Wireless Access Points). *See supra* discussion for claim element 1.pre, the contents of which are incorporated herein by reference.
2.a. wherein at least one mesh node of the mesh network is configured to scan a Radio Frequency (RF) environment using a dedicated scanning radio to determine a new potential parent mesh node for connecting with said at least one mesh node;	*See supra* discussion for claim element 1.a., the contents of which are incorporated herein by reference.
2.b. wherein said at least one mesh node includes, in addition to the scanning radio, at least two relay radios in each	*See supra* discussion for claim element 1.b., the contents of which are incorporated herein by reference.

mesh element and wherein said scanning radio and said at least two relay radios operate on different non-interfering channels;	
2.c. wherein while said at least one mesh node samples potential new parent nodes, packets to be sent to said at least one mesh node from its current parent node are buffered by the current parent node, and packets to be sent from said at least one mesh node to its current parent are buffered by said at least one mesh node;	*See supra* discussion for claim element 1.d., the contents of which are incorporated herein by reference.
2.d. wherein sampling times are coordinated among multiple mesh nodes having a common current parent node whereby the common current parent node sends tokens to each of its children in a round-robin manner.	*See supra* discussion for claim element 1.e., the contents of which are incorporated herein by reference.
Claim 3	**Cisco's Wireless Mesh Network with Ultra Reliable Wireless Backhaul**
3.pre. A mesh network comprising: a plurality of mesh nodes;	Cisco's Wireless Mesh Network with Ultra Reliable Wireless Backhaul ("URWB") comprises a mesh network having a plurality of mesh nodes (*e.g.*, Cisco Catalyst Heavy Duty Access Points and Industrial Wireless Access Points). *See supra* discussion for claim element 1.pre, the contents of which are incorporated herein by reference.

3.a. wherein each node within said plurality of nodes comprises at least three radios further including	Cisco Catalyst Heavy Duty Access Points and Industrial Wireless Access Points in the Cisco Wireless Mesh Network with URWB comprise a mesh network wherein each node within said plurality of nodes comprises at least three radios. As shown above, the Cisco Catalyst Heavy Duty Access Points and Industrial Wireless Access Points are tri-radio, or include at least dual radios and a scanning radio. Each of the 2.4GHz and 5GHz (or 6GHz) bands have several different non-interfering channels for radio operation. For instance, channels 1, 6 and 11 on the 2.4 GHz band do not interfere. There are 24 non-overlapping channels for 5GHz, offering more flexibility and less congestion. The APs use at least the 2.4 GHz, 5 GHz, and/or 6 GHz bands to provide comprehensive monitoring and use of the wireless spectrum for various purposes, at different channels. *See supra* discussion for claim elements 1.a and 1.b., the contents of which are incorporated herein by reference. If this claim element is not literally infringed, it is infringed under the doctrine of equivalents. Cisco's Catalyst Heavy Duty Access Points and Industrial Wireless Access Points perform the same function of determining a new potential parent mesh node for connecting with at least one mesh node in the same way by using radios to regularly scan for and track potential new parents in an RF environment, with radios operating at different frequencies and channels, and achieves the same result by determining the best parent mesh node for optimal network performance. Moreover, any differences between the functionality of the Cisco Accused Products and the claimed element are insignificant or insubstantial because Cisco's mesh networks deploy multiple dual-radio (or tri-radio) mesh access points to find the best path through the network for data traffic by scanning for new parents. A person skilled in the relevant art would consider any difference between the claimed invention and the Cisco Accused Products to be minor and insubstantial. MeshDynamics asserts that this claim element is a software limitation. Pursuant to P.R. 3-1(g) and Judge Schroeder's standard discovery order, MeshDynamics will identify what Cisco source code satisfies this limitation 30 days after Cisco's complete production of source code or at such other time as the parties may agree to.
3.b. a first relay radio operating on a first RF channel at a first point in time and dedicated to uplink connections to a single current parent node; a second relay radio operating on a second RF channel at a first point in	Cisco Catalyst Heavy Duty Access Points and Industrial Wireless Access Points in the Cisco Wireless Mesh Network comprise a first relay radio operating on a first RF channel at a first point in time and dedicated to uplink connections to a single current parent node and a second relay radio operating a second RF channel at a first point in time dedicated to downlink connections to zero or more child nodes. As shown above, and in Cisco's documentation, the Cisco Catalyst Heavy Duty Access Points and Industrial Wireless Access Points have dedicated backhaul radios (uplink to the parent and network and downlink to zero or more child nodes) operating on different channels. Cisco's access point radio(s) can be a "dedicated" when being used for the purpose of uplink to the parent node or downlink to zero or more child nodes. Cisco Catalyst Heavy Duty Access Points and Industrial Wireless Access Points are tri-radio, or include at least dual radios and a scanning radio. Each of the 2.4GHz and 5GHz (or 6GHz) bands have several different non-interfering channels for radio operation. For instance,

time dedicated to downlink connections to zero or more child nodes; and	channels 1, 6 and 11 on the 2.4 GHz band do not interfere. There are 24 non-overlapping channels for 5GHz, offering more flexibility and less congestion. **Feature** / **Benefit** **Tri-radio architecture** IW9167E • 2.4 GHz 4x4 radio: 20-MHz channels • 5 GHz 4x4 radio: 20, 40, 80 MHz channels • 5/6˜ GHz 4x4 radio: 20, 40, 80, and 160 MHz channels IW9167I • 2.4 GHz 4x4 radio: 20-MHz channels • 5 GHz 4x4 radio: 20, 40, 80 MHz channels • 6˜ GHz 4x4 radio: 20, 40, 80, and 160 MHz channels **Uplink/downlink OFDMA¥** — Orthogonal Frequency-Division Multiple Access (OFDMA)-based scheduling splits the bandwidth into smaller frequency allocations called Resource Units (RUs), which can be assigned to individual clients in both the downlink and uplink directions to reduce overhead and latency. **Uplink/downlink MU-MIMO technology¥** — Supporting four spatial streams, Multiuser Multiple Input, Multiple Output (MU-MIMO) enables access points to split spatial streams between client devices to maximize throughput. Source: https://www.industrialnetworking.com/pdf/Cisco-Catalyst-IW9167E.pdf *See supra* discussion for claim elements 1.a and 1.b, the contents of which are incorporated herein by reference. If these claim elements are not literally infringed, they are infringed under the doctrine of equivalents. Cisco's Catalyst Heavy Duty Access Points and Industrial Wireless Access Points perform the same function of determining a new potential parent mesh node for connecting with at least one mesh node in the same way by using radios to regularly scan for and track potential new parents in an RF environment, with radios operating at different frequencies and channels, and achieves the same result by determining the best parent mesh node for optimal network performance. Moreover, any differences between the functionality of the Cisco Accused Products and the claimed elements are insignificant or insubstantial because Cisco's mesh networks deploy multiple dual-radio (or tri-radio) mesh access points to find the best path through the network for data traffic by scanning for new parents. A person skilled in the relevant art would consider any difference between the claimed invention and the Cisco Accused Products to be minor and insubstantial. MeshDynamics asserts that this claim element is a software limitation. Pursuant to P.R. 3-1(g) and Judge Schroeder's standard discovery order, MeshDynamics will identify what Cisco source code satisfies this limitation 30 days after Cisco's complete production of source code or at such other time as the parties may agree to.

3.c. a dedicated scanning radio operating on a third RF channel at a first point in time and configured to scan a Radio Frequency (RF) environment to discover new potential parent mesh nodes for connection with said first relay radio;	*See supra* discussion for claim element 1.a, the contents of which are incorporated herein by reference.
3.d. said first, second, and third RF channels are different from each other	*See supra* discussion for claim elements 1.a, 1.b, 3.a, and 3.b, the contents of which are incorporated herein by reference.
3.e. wherein after said dedicated scanning radio discovers a potential new parent node, said first relay radio samples the RF link to said potential new parent node using its uplink radio and concurrent with said sampling, packets to be sent to the mesh node from its current parent node are buffered by the current parent node, and packets to be sent from the mesh node to its current parent node are buffered by the mesh node wherein sampling times are coordinated among multiple mesh nodes having a common	*See supra* discussion for claim elements 1.a, 1.c, 1.d. and 1.e. the contents of which are incorporated herein by reference.

current parent node whereby the common current parent node sends tokens to each of its children in a round-robin manner.	
Claim 2	**Cisco's Wireless Mesh Network with Catalyst and Aironet Access Points**
2.pre. A mesh network comprising: a plurality of mesh nodes;	Cisco's Wireless Mesh Network (a component of the Cisco Unified Wireless Network solution) comprises a mesh network having a plurality of mesh nodes (*e.g.*, Cisco Catalyst 9100 and Aironet Series Access Points). Cisco Catalyst 9100 and Aironet Access Points support Wi-Fi capabilities. The Catalyst series is a follow-up from the Cisco Aironet series access points, and the Aironet and Catalyst Access Points contain the same mesh networking capabilities, as shown below in Cisco's documentation and guides that apply to both product lines: Q. Which Cisco access points support Wi-Fi 6? A. Cisco Catalyst 9100 enterprise-class access points support Wi-Fi 6 capabilities, extending the power of intent-based networking with hardware and software innovations. The Cisco Catalyst 9100 APs offer resiliency and security while enabling intelligence at the network edge. Q. What is the portfolio transition from the Cisco Aironet Series to the Cisco Catalyst 9100 platform? A. The Cisco Catalyst 9100 Access Points consist of the Cisco Catalyst 9105, 9115, 9120, 9130, 9136, 9162, 9164, 9166 and 9166D1, and outdoor 9163E Series. These access points are the follow-ups to the Cisco Aironet 1815, 1850, 2800, and 3800 Series Access Points, respectively. The Cisco Catalyst 9100 Access Points come equipped with Wi-Fi 6/6E capabilities, a better industrial design, and improved RF performance, and deliver reliability, security, and intelligence at scale. Source: https://www.cisco.com/c/en/us/products/collateral/wireless/catalyst-9100ax-access-points/nb-06-802-11ax-faq-cte-en.html

Cisco Aironet 1560 Series Outdoor Access Points

Product Type	Outdoor and Industrial Wireless
Status	End of Sale **EOL Details**
Series Release Date	05-JUL-2016
End-of-Sale Date	31-JAN-2023
End-of-Support Date	31-JAN-2028

This product is supported by Cisco, but is no longer being sold. Ready for an upgrade? The **Cisco Catalyst 9124AX Series Access Points** offer greater performance and functionality.

Source: https://www.cisco.com/c/en/us/support/wireless/aironet-1560-series/series.html

Mesh deployments are supported on the Cisco Catalyst 9100 Access Points:

Q. Will Mesh deployment be supported on the Catalyst 9124 Access Points?

A. Yes. Mesh deployments will be supported on the Catalyst 9124 Access Points. Embedded Wireless Controller deployment is also supported with the Catalyst 9124 Access Point acting as a controller for up to 100 APs.

Source: https://www.cisco.com/c/en/us/products/collateral/wireless/catalyst-9100ax-access-points/nb-06-802-11ax-faq-cte-en.html

In addition to the Wave 1 and Wave 2 access points, mesh deployments are supported on the Cisco Catalyst 9100 Access Points, including, *e.g.*, Catalyst 9124 Access Points, Catalyst 9130 Access Points and "AX" access points:

Families of mesh APs

The two families of mesh APs available are the Cisco Wave 1 APs and the Cisco Wave 2 APs + the AX APs. These two families of mesh APs have different capabilities and features, and they are not fully compatible with each other. The Cisco Wave 1 APs do not support the same feature set as the Cisco Wave 2 + AX APs.

Source: https://www.cisco.com/c/en/us/td/docs/wireless/controller/9800/17-15/config-guide/b_wl_17_15_cg/m_mesh_ewlc.html; *see also* https://www.cisco.com/c/en/us/td/docs/wireless/controller/9800/16-12/config-guide/b_wl_16_12_cg/mesh-access-points.html

> From this release, mesh support is included in the Cisco Catalyst 9130AX Series Access Points. All traditional capabilities of mesh are included in the Cisco Catalyst 9130AX Series APs operating in Cisco IOS XE Dublin 17.12.1.

Source: https://www.cisco.com/c/en/us/td/docs/wireless/controller/ewc/17-13/config-guide/ewc_cg_17_13/mesh_access_points.html

Cisco Catalyst 9100 Access Points (with the Cisco Aironet series access points) can be deployed in a Cisco Wireless Mesh Network with a controller and software, such as the Catalyst 9800 Controller and Cisco DNA and Prime Infrastructure. Cisco Aironet and Catalyst series access points are both identified as components of a Cisco wireless mesh network:

> **Mesh Network Components**
>
> This section describes the mesh network components.
>
> The Cisco wireless mesh network has four core components:
>
> - Cisco C9800 and IOS-XE 17.1
> - Cisco Aironet and Catalyst series access points
> - Cisco PI and Cisco DNA Center
> - Mesh software architecture

Mesh networking employs Cisco Aironet 1540, 1560, or 1570 Series access points and the latest Catalyst 9124AX Series outdoor mesh access points; Catalyst 9800 Series wireless controllers; and Cisco DNA Center to provide scalable, central management and mobility between indoor and outdoor deployments. The CAPWAP protocol manages the connection of mesh access points to the network.

- Cisco Aironet Wave 1 indoor APs: 1700, 2700, and 3700 series.
- Cisco Aironet Wave 2 indoor APs: 1815i, 1815m, 1830, 1850, 2800, 3800, and 4800 Series.

Source: https://www.cisco.com/c/dam/en/us/td/docs/wireless/controller/9800/17-1/deployment-guide/c9800-mesh-rel-17-1.pdf; https://www.cisco.com/c/en/us/products/collateral/wireless/unified-wireless-network-sg.html#12Mesh; *see also* https://www.cisco.com/c/en/us/td/docs/wireless/controller/technotes/8-8/b_mesh_88.pdf

In Cisco's Wireless Mesh Network, Cisco Catalyst 9100 and Aironet Access Points ("plurality of mesh nodes" as shown in red below) are organized in a mesh network.

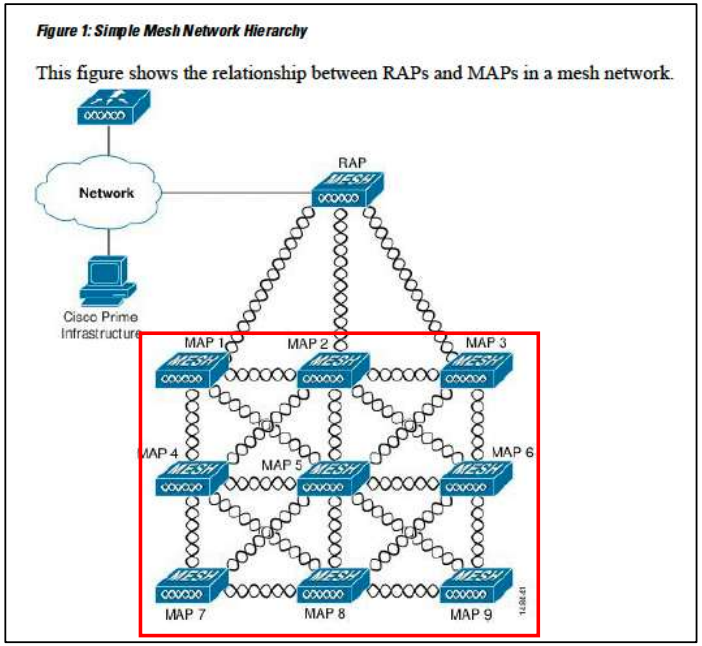

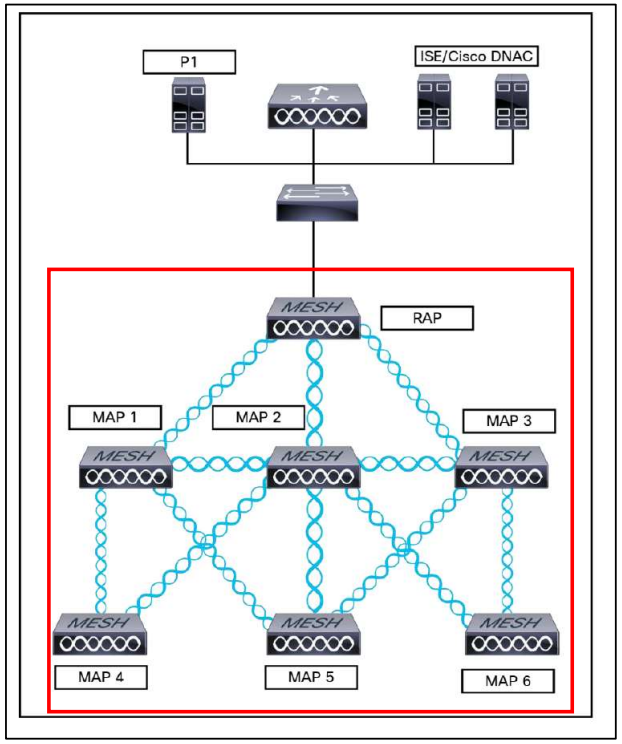

	Source: https://www.cisco.com/c/en/us/td/docs/wireless/controller/technotes/8-8/b_mesh_88.pdf; https://www.cisco.com/c/en/us/products/collateral/wireless/unified-wireless-network-sg.html#12Mesh
2.a. wherein at least one mesh node of the mesh network is configured to scan a Radio Frequency (RF) environment using a dedicated scanning radio to determine a new potential parent mesh node for connecting with said at least one mesh node;	Cisco's Catalyst 9100 and Aironet Access Points in the Cisco Wireless Mesh Network comprise of a method for operating a mesh network having a plurality of mesh nodes comprising for at least one mesh node of the mesh network, scanning a Radio Frequency (RF) environment using a dedicated scanning radio to determine a new potential parent mesh node for connecting with said at least one mesh node. Cisco's Catalyst 9100 and Aironet Access Points support multiple radios, including one or more radios for client access, one or more radios for wireless backhaul, and a scanning radio. Cisco's access point radio(s) can be a "dedicated scanning radio" when being used for the purpose of scanning to discover neighbors or other mesh nodes ("new potential parent mesh node") but may subsequently be used for other purposes such as backhaul or sampling. With multiple radios (*e.g.*, tri-radio) one radio can be dedicated to the purpose of scanning. For example, Cisco Catalyst 9130AX Wi-Fi 6 access point is tri-radio (2.4 GHz + 5 GHz with dual-5GHz using Flexible Radio Assignment) that supports mesh. One radio can be used for client access, the others used flexibly for backhaul or scanning at different channels. **Flexible Radio Assignment (FRA) with tri-radio mode** FRA allows the access points to intelligently determine the operating mode of serving radios based on the RF environment and traffic demands. The access points can operate in the following modes: • Dual-radio mode: One 8x8 5 GHz and one 4x4 2.4 GHz. One radio will serve clients on the 5-GHz band, while the other serves clients on the 2.4-GHz band. • Tri-radio mode: * Dual 4x4 5 GHz and one 4x4 2.4 GHz. With two 4x4 5-GHz and one 4x4 2.4-GHz radios (tri-radio) inside the access point, client device capacity can be increased on demand. The access point's default mode is dual radio with 8x8 5 GHz and 4x4 2.4 GHz. It has the ability to split the 8x8 radio into two separate 4x4 5-GHz radios through software, thereby enabling the benefits of FRA while allowing the 2.4-GHz radio to remain active. Source: https://www.cisco.com/c/en/us/products/collateral/wireless/catalyst-9100ax-access-points/nb-06-cat-9130-ser-ap-ds-cte-en.html

Cisco Access Points with Tri-Radio

This topic describes the Tri-Radio feature for Cisco Access Points (APs).

Access Points with three radios are designed for high density environments. The APs by default run one dedicated 2.4-GHz 4x4 mode radio and one 5-GHz 8x8 mode radio. In the default mode, the radios are managed by the Flexible Radio Assignment (FRA), and the Dual Radio Mode is in the disabled state indicating that the radios have either been assigned as client serving 8x8 radio or have not yet been evaluated by FRA.

When you enable the dual radio mode setting, the 8x8 radio is split to two independent 5-GHz 4x4 radios. In this mode, slot 1 and slot 2 are active independent 4x4 radio interfaces. They can serve different user groups with different assigned channels.

Source: https://www.cisco.com/c/en/us/td/docs/wireless/controller/9800/17-2/config-guide/b_wl_17_2_cg/cisco_access_points_with_tri_radio.pdf

There is also a Cisco RF ASIC (Software-Defined Radio), as described in Cisco's datasheet that functions a dedicated monitoring radio, enabling spectrum scanning off-channel to find other neighboring mesh nodes and to facilitate parent discovery ("dedicated scanning radio to determine a new potential parent mesh node for connecting with said at least one mesh node").

Cisco RF ASIC	The Cisco RF Application-Specific Integrated Circuit (ASIC) is a fully integrated Software-Defined Radio (SDR) that can perform advanced RF spectrum analysis and delivers features such as Cisco CleanAir, Wireless Intrusion Prevention System (WIPS), FastLocate, and Dynamic Frequency Selection (DFS) detection.

Source: https://www.cisco.com/c/en/us/products/collateral/wireless/catalyst-9100ax-access-points/nb-06-cat-9130-ser-ap-ds-cte-en.html

- Off-Channel Radio Resource Management (RRM) Scanning and Neighbor Discovery Protocol (NDP) Transmission: RF ASIC performs off-channel scanning to analyze channel utilization. In typical RRM scenarios, when the radio is off channel, it cannot receive from or transmit to clients on the channel it was serving. In a busy network, this scanning is often interrupted periodically to prevent potential intermittent delays or packet loss on time sensitive applications. The RF ASIC radio offloads this function by continuously monitoring conditions and enhancing the performance of the access points' client-serving radios.

Source: https://blogs.cisco.com/networking/cisco-rf-asic-named-best-enterprise-wi-fi-network-technology-by-the-wireless-broadband-alliance

In addition, while 5 GHz is often used for the primary backhaul (communication between access points), 2.4 GHz can also be used for backhaul and scanning, for example, when Universal Backhaul Access (UBA) is enabled.

Source: https://www.cisco.com/c/en/us/td/docs/wireless/technology/mesh/8-6/b_mesh_86/m_mesh-network-components.html

Catalyst 9100 and Aironet Access Points in Cisco Wireless Mesh Networks use Adaptive Wireless Path Protocol (AWPP) to determine the best path through the mesh access points (MAPs) to a Root Access Point (RAP). This includes selection of a parent mesh node and establishing a parent-child relationship. AWPP takes RF details into account. During solicitation, the MAP learns all the available neighbors back to a RAP, determines which neighbor offers the best path and then synchronizes with that neighbor. On information and belief, the 5GHz backhaul radio, for example, may also be used by AWPP for scanning to find a new potential parent mesh node.

Adaptive Wireless Path Protocol

The Adaptive Wireless Path Protocol (AWPP) is designed specifically for wireless mesh networking to provide ease of deployment, fast convergence, and minimal resource consumption.

AWPP takes advantage of the CAPWAP WLAN, where client traffic is tunneled to the controller and is therefore hidden from the AWPP process. Also, the advance radio management features in the CAPWAP WLAN solution are available to the wireless mesh network and do not have to be built into AWPP.

AWPP enables a remote access point to dynamically find the best path back to a RAP for each MAP that is part of the RAP's bridge group (BGN). Unlike traditional routing protocols, AWPP takes RF details into account.

To optimize the route, a MAP actively solicits neighbor MAP. During the solicitation, the MAP learns all of the available neighbors back to a RAP, determines which neighbor offers the best path, and then synchronizes with that neighbor. The path decisions of AWPP are based on the link quality and the number of hops.

AWPP automatically determines the best path back to the CAPWAP controller by calculating the cost of each path in terms of the signal strength and number of hops. After the path is established, AWPP continuously monitors conditions and changes routes to reflect changes in conditions. AWPP also performs a smoothing function to signal condition information to ensure that the ephemeral nature of RF environments does not impact network stability.

Source: https://www.cisco.com/c/en/us/td/docs/wireless/controller/technotes/8-8/b_mesh_88.pdf; https://www.cisco.com/c/dam/en/us/td/docs/wireless/controller/9800/17-1/deployment-guide/c9800-mesh-rel-17-1.pdf at 12; https://www.cisco.com/c/en/us/products/collateral/wireless/unified-wireless-network-sg.html#12Mesh

AWPP follows a process in selecting parents for a MAP with a radio backhaul, including generating a list of channels with neighbors by passive scanning in the *scan* state, which is a subset of all backhaul channels. The channels with the neighbors are sought by actively scanning in the *seek* state and the backhaul channel is changed to the best neighbor. Parent maintenance and optimization occurs in the maintain state.

Criteria to Choose the Best Parent

AWPP follows this process in selecting parents for a RAP or MAP with a radio backhaul:

- A list of channels with neighbors is generated by passive scanning in the *scan* state, which is a subset of all backhaul channels.
- The channels with neighbors are sought by actively scanning in the *seek* state and the backhaul channel is changed to the channel with the best neighbor.
- The parent is set to the best neighbor and the parent-child handshake is completed in the *seek* state.
- Parent maintenance and optimization occurs in the *maintain* state.

This algorithm is run at startup and whenever a parent is lost and no other potential parent exists, and is usually followed by CAPWAP network and controller discovery. All neighbor protocol frames carry the channel information.

Parent maintenance occurs by the child node sending a directed NEIGHBOR_REQUEST to the parent and the parent responding with a NEIGHBOR_RESPONSE.

Parent optimization and refresh occurs by the child node sending a NEIGHBOR_REQUEST broadcast on the same channel on which its parent resides, and by evaluating all responses from neighboring nodes on the channel.

A parent mesh access point provides the best path back to a RAP. AWPP uses ease to determine the best path. Ease can be considered the opposite of cost, and the preferred path is the path with the higher ease.

Source: https://www.cisco.com/c/en/us/td/docs/wireless/controller/technotes/8-8/b_mesh_88.pdf; *see also* https://www.cisco.com/c/en/us/products/collateral/wireless/unified-wireless-network-sg.html#12Mesh

The Mesh Background Scanning feature allows for faster mesh convergence and sampling potential new parent nodes. The child MAP periodically scans its neighbors across all off-channels to connect with a better potential parent.

This new Mesh Background Scanning and Auto parent selection will further improve convergence times and parent selection reliability and stability - a MAP should be able to find and connect with a better potential parent across any channels and maintain its uplink with a best parent all the time .

A child MAP will switch between optimal parents based on periodic evaluation of best neighbors across all off-channels. Best next parent is identified with highest adjustedEase value of another off-channel neighbor compared to current on-channel parent's stickyEase.

Source: https://www.cisco.com/c/en/us/td/docs/wireless/controller/technotes/8-8/b_mesh_88.pdf

Deploy multiple RAPs in each BGN

When deploying a mesh network, there should be multiple paths for each access point back to a WLC. Multiple paths can be added by having multiple RAPs per mesh tree. If a RAP fails and goes offline, other mesh access points will join another RAP with the same bridge group name (BGN) and still have a path back to the WLC.

For best results, follow these simple recommendations:

Ensure that RAPs are configured on different channels to reduce or avoid co-channel interference. MAPs will use background scanning to identify each RAP.

RAPs should be on the same VLAN/subnet to prevent mesh AP address renegotiation on parent change that could delay total mesh convergence time.

Ensure that MAPs have background scanning enabled, to facilitate new parent discovery.

Source: https://www.cisco.com/c/en/us/td/docs/wireless/controller/9800/technical-reference/c9800-best-practices.html

If this claim element is not literally infringed, it is infringed under the doctrine of equivalents. Cisco's Catalyst 9100 and Aironet Access Points perform the same function of determining a new potential parent mesh node for connecting with said at least one mesh node in the same way by using radios to regularly scan for and track potential new parents in an RF environment and achieves the same result by determining the best parent mesh node for optimal network performance. Moreover, any differences between the functionality of the Cisco Accused Products and the claimed element are insignificant or insubstantial because Cisco's mesh networks deploy multiple dual-radio (or tri-radio) mesh access points to find the best path through the network for data traffic by scanning for new parents. A person skilled in

	the relevant art would consider any difference between the claimed invention and the Cisco Accused Products to be minor and insubstantial. MeshDynamics asserts that this claim element is a software limitation. Pursuant to P.R. 3-1(g) and Judge Schroeder's standard discovery order, MeshDynamics will identify what Cisco source code satisfies this limitation 30 days after Cisco's complete production of source code or at such other time as the parties may agree to.
2.b. wherein said at least one mesh node includes, in addition to the scanning radio, at least two relay radios in each mesh element and wherein said scanning radio and said at least two relay radios operate on different non-interfering channels;	Cisco's Catalyst 9100 and Aironet Access Points in the Cisco Wireless Mesh Network comprise of a method for operating a mesh network having a plurality of mesh nodes, comprising wherein said at least one mesh node includes, in addition to said scanning radio, at least two relay radios in each mesh element and wherein said scanning radio and said at least two relay radios operate on different non-interfering channels. Cisco's Catalyst 9100 and Aironet Access Points support multiple relay radios, including one or more radios for client access and one or more radios for wireless backhaul, and a scanning radio, that operate on different non-interfering channels by operating at different frequencies with different channels (*e.g.*, 2.4GHz, 5GHz channels). For example, Cisco Catalyst 9130AX Wi-Fi 6 access point is tri-radio (2.4 GHz + 5 GHz with dual-5GHz backhaul using Flexible Radio Assignment). One relay radio can be used for client access, the other used flexibly for backhaul or scanning at two different channels. Each of the 2.4GHz and 5GHz bands have several different non-interfering channels for radio operation. For instance, channels 1, 6 and 11 on the 2.4 GHz band do not interfere. The 5-GHz radio supports the 5.15 GHz, 5.25 GHz, 5.47 GHz, and 5.8 GHz bands, and there are 24 non-overlapping channels, offering more flexibility and less congestion. **Flexible Radio Assignment (FRA) with tri-radio mode** FRA allows the access points to intelligently determine the operating mode of serving radios based on the RF environment and traffic demands. The access points can operate in the following modes: • Dual-radio mode: One 8x8 5 GHz and one 4x4 2.4 GHz. One radio will serve clients on the 5-GHz band, while the other serves clients on the 2.4-GHz band. • Tri-radio mode: * Dual 4x4 5 GHz and one 4x4 2.4 GHz. With two 4x4 5-GHz and one 4x4 2.4-GHz radios (tri-radio) inside the access point, client device capacity can be increased on demand. The access point's default mode is dual radio with 8x8 5 GHz and 4x4 2.4 GHz. It has the ability to split the 8x8 radio into two separate 4x4 5-GHz radios through software, thereby enabling the benefits of FRA while allowing the 2.4-GHz radio to remain active.

Source: https://www.cisco.com/c/en/us/products/collateral/wireless/catalyst-9100ax-access-points/nb-06-cat-9130-ser-ap-ds-cte-en.html

Cisco Access Points with Tri-Radio

This topic describes the Tri-Radio feature for Cisco Access Points (APs).

Access Points with three radios are designed for high density environments. The APs by default run one dedicated 2.4-GHz 4x4 mode radio and one 5-GHz 8x8 mode radio. In the default mode, the radios are managed by the Flexible Radio Assignment (FRA), and the Dual Radio Mode is in the disabled state indicating that the radios have either been assigned as client serving 8x8 radio or have not yet been evaluated by FRA.

When you enable the dual radio mode setting, the 8x8 radio is split to two independent 5-GHz 4x4 radios. In this mode, slot 1 and slot 2 are active independent 4x4 radio interfaces. They can serve different user groups with different assigned channels.

Source: https://www.cisco.com/c/en/us/td/docs/wireless/controller/9800/17-2/config-guide/b_wl_17_2_cg/cisco_access_points_with_tri_radio.pdf

As discussed above, these radios are also in addition to the Cisco RF ASIC (Software-Defined Radio) scanning radio, as described in Cisco's datasheet that functions a dedicated monitoring radio, enabling spectrum scanning.

Cisco RF ASIC	The Cisco RF Application-Specific Integrated Circuit (ASIC) is a fully integrated Software-Defined Radio (SDR) that can perform advanced RF spectrum analysis and delivers features such as Cisco CleanAir, Wireless Intrusion Prevention System (WIPS), FastLocate, and Dynamic Frequency Selection (DFS) detection.

Source: https://www.cisco.com/c/en/us/products/collateral/wireless/catalyst-9100ax-access-points/nb-06-cat-9130-ser-ap-ds-cte-en.html

If this claim element is not literally infringed, it is infringed under the doctrine of equivalents. Cisco's Catalyst 9100 and Aironet Access Points perform the same function of determining a new potential parent mesh node for connecting with at least one mesh node in the same way by using radios to regularly scan for and track potential new parents in an RF environment, with radios operating at different frequencies and channels, and achieves the same result by determining the best parent mesh node for optimal network performance. Moreover, any differences between the functionality of the

	Cisco Accused Products and the claimed element are insignificant or insubstantial because Cisco's mesh networks deploy multiple dual-radio (or tri-radio) mesh access points to find the best path through the network for data traffic by scanning for new parents. A person skilled in the relevant art would consider any difference between the claimed invention and the Cisco Accused Products to be minor and insubstantial. MeshDynamics asserts that this claim element is a software limitation. Pursuant to P.R. 3-1(g) and Judge Schroeder's standard discovery order, MeshDynamics will identify what Cisco source code satisfies this limitation 30 days after Cisco's complete production of source code or at such other time as the parties may agree to.
2.c. wherein while said at least one mesh node samples potential new parent nodes, packets to be sent to said at least one mesh node from its current parent node are buffered by the current parent node, and packets to be sent from said at least one mesh node to its current parent are buffered by said at least one mesh node;	Cisco's Catalyst 9100 and Aironet Access Points in the Cisco Wireless Mesh Network comprise a mesh network wherein while said at least one mesh node samples potential new parent nodes, packets to be sent to said at least one mesh node from its current parent node are buffered by the current parent node, and packets to be sent from said at least one mesh node to its current parent are buffered by said at least one mesh node. Catalyst 9100 and Aironet Access Points in Cisco Wireless Mesh Networks use AWPP to determine the best path through the MAPs to a RAP. This includes selection of a parent mesh node and establishing a parent-child relationship. AWPP takes RF details into account. During solicitation, the MAP learns all of the available neighbors back to a RAP, receives a token to commence sampling while packets are buffered, and observes the downlink-uplink connectivity ("samples potential new parent nodes"), determines which neighbor offers the best path and then synchronizes with that neighbor to either switch to a new parent that offers a better path, or decides to stay with its current parent.

Adaptive Wireless Path Protocol

The Adaptive Wireless Path Protocol (AWPP) is designed specifically for wireless mesh networking to provide ease of deployment, fast convergence, and minimal resource consumption.

AWPP takes advantage of the CAPWAP WLAN, where client traffic is tunneled to the controller and is therefore hidden from the AWPP process. Also, the advance radio management features in the CAPWAP WLAN solution are available to the wireless mesh network and do not have to be built into AWPP.

AWPP enables a remote access point to dynamically find the best path back to a RAP for each MAP that is part of the RAP's bridge group (BGN). Unlike traditional routing protocols, AWPP takes RF details into account.

To optimize the route, a MAP actively solicits neighbor MAP. During the solicitation, the MAP learns all of the available neighbors back to a RAP, determines which neighbor offers the best path, and then synchronizes with that neighbor. The path decisions of AWPP are based on the link quality and the number of hops.

AWPP automatically determines the best path back to the CAPWAP controller by calculating the cost of each path in terms of the signal strength and number of hops. After the path is established, AWPP continuously monitors conditions and changes routes to reflect changes in conditions. AWPP also performs a smoothing function to signal condition information to ensure that the ephemeral nature of RF environments does not impact network stability.

Source: https://www.cisco.com/c/en/us/td/docs/wireless/controller/technotes/8-8/b_mesh_88.pdf; https://www.cisco.com/c/dam/en/us/td/docs/wireless/controller/9800/17-1/deployment-guide/c9800-mesh-rel-17-1.pdf at 12; https://www.cisco.com/c/en/us/products/collateral/wireless/unified-wireless-network-sg.html#12Mesh

AWPP follows a process in selecting parents for a MAP with a radio backhaul, including generating a list of channels with neighbors by passive scanning in the scan state, which is a subset of all backhaul channels. The channels with the neighbors are sought by actively scanning in the seek state and the backhaul channel is changed to the best neighbor. Parent optimization and refresh occurs by the child node sending a NEIGHBOR_REQUEST broadcast on the same channel on which its parent resides to sample potential new parents.

Criteria to Choose the Best Parent

AWPP follows this process in selecting parents for a RAP or MAP with a radio backhaul:

- A list of channels with neighbors is generated by passive scanning in the *scan* state, which is a subset of all backhaul channels.
- The channels with neighbors are sought by actively scanning in the *seek* state and the backhaul channel is changed to the channel with the best neighbor.
- The parent is set to the best neighbor and the parent-child handshake is completed in the *seek* state.
- Parent maintenance and optimization occurs in the *maintain* state.

This algorithm is run at startup and whenever a parent is lost and no other potential parent exists, and is usually followed by CAPWAP network and controller discovery. All neighbor protocol frames carry the channel information.

Parent maintenance occurs by the child node sending a directed NEIGHBOR_REQUEST to the parent and the parent responding with a NEIGHBOR_RESPONSE.

Parent optimization and refresh occurs by the child node sending a NEIGHBOR_REQUEST broadcast on the same channel on which its parent resides, and by evaluating all responses from neighboring nodes on the channel.

A parent mesh access point provides the best path back to a RAP. AWPP uses ease to determine the best path. Ease can be considered the opposite of cost, and the preferred path is the path with the higher ease.

Source: https://www.cisco.com/c/en/us/td/docs/wireless/controller/technotes/8-8/b_mesh_88.pdf; *see also* https://www.cisco.com/c/en/us/products/collateral/wireless/unified-wireless-network-sg.html#12Mesh

The Mesh Background Scanning feature allows for faster mesh convergence and soliciting and selecting potential new parent nodes. A child MAP will switch between optimal parents based on evaluation across all off-channels.

This new Mesh Background Scanning and Auto parent selection will further improve convergence times and parent selection reliability and stability - a MAP should be able to find and connect with a better potential parent across any channels and maintain its uplink with a best parent all the time .

A child MAP will switch between optimal parents based on periodic evaluation of best neighbors across all off-channels. Best next parent is identified with highest adjustedEase value of another off-channel neighbor compared to current on-channel parent's stickyEase.

https://www.cisco.com/c/en/us/td/docs/wireless/controller/technotes/8-8/b_mesh_88.pdf

	Parent Loss Detection/ Keep Alive Timers	Channel Scan/Seek	DHCP/CAPWAP Information	Time per hop (sec)
Standard	21 / 3 sec	Scan/Seek all 2.4 and 5 Ghz Channels	Renew / Restart CAPWAP	48.6*
Fast	7 / 3 sec	Scan/Seek only channels found in same bridge group	Maintain DHCP and CAPWAP	20.5*
Very Fast	4 / 1.5 sec	Scan/Seek only channels found in same bridge group	Maintain DHCP and CAPWAP	15.9*
CCN/BG Scan Fast/VF	4 / 3 sec for 50ms	Scan/Seek only channels found in same bridge group	Maintain DHCP and CAPWAP	8-10 sec

During this process, when a MAP goes off-channel periodically, it transmits NDReq broadcast packets on the selected off-channel and receives NDResp packs from all neighbor.

Non–DFS channel scan

- A MAP goes off-channel periodically, transmits NDReq broadcast packets on the selected off-channel, and shall receive NDResp packets from all 'reachable' neighbors
- Off-channel scan periodicity will occur every 3 seconds and stay for a maximum of 50 milliseconds per off-channel
- NDReq has to be transmitted every 10 milliseconds to send at least 4 messages within 50 milliseconds dwell time to hear better from each neighbor

https://www.cisco.com/c/en/us/td/docs/wireless/controller/technotes/8-8/b_mesh_88.pdf

During the process, when the access points go "off-channel," packets to be sent to a current parent node are buffered by the current parent node, and packets to be sent from the child to its current parent are buffered, as shown in the illustration below. On information and belief, details regarding packet transfer during parent node switching will be shown in Cisco's proprietary code.

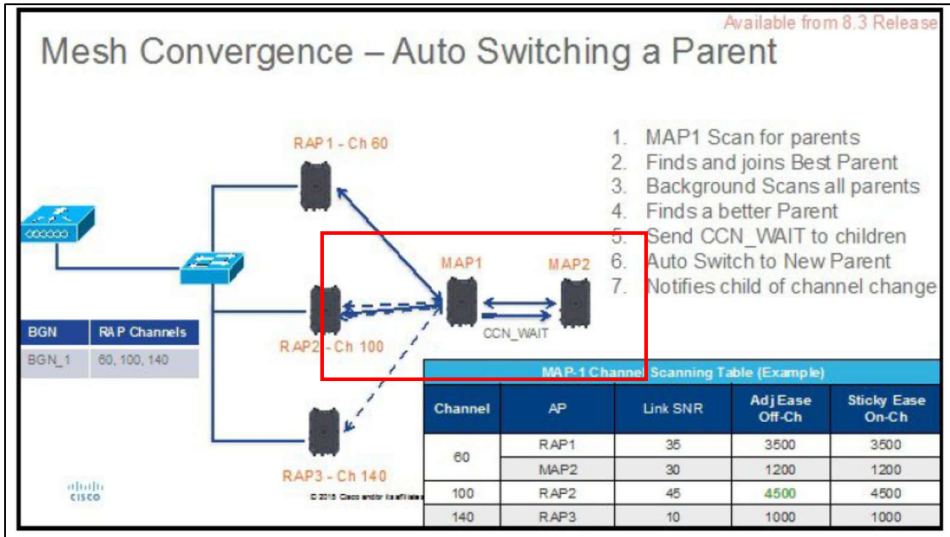

The illustration below shows Mesh convergence and Parent Auto Switching when the "ease" value dictates switching to a better parent is prompted by new "ease value" even if the original parent is still available.

https://www.cisco.com/c/en/us/td/docs/wireless/controller/technotes/8-8/b_mesh_88.pdf; *see also* https://www.cisco.com/c/en/us/support/docs/wireless/wireless-lan-controller-software/214393-configure-rrm-to-defer-off-channel-scann.html (describing delays associated with buffering the client traffic while the APs are performing off-channel scanning)

On information and belief, Cisco's proprietary mesh network operates the same or similar to 802.11 Passive/Active Scanning, where client radios look for the best access points to connect to. The client radio sends a null data frame to the access point, indicating that the client radio is going into sleep mode, and the access point well then starts buffering packets destined to the client radio. The client radio also buffers packets destined to the access point, and then the client radio goes "off channel" to scan other channels for possible neighboring access points. On information and belief, the access points in a Cisco Wireless Mesh Network operate in the same or similar as shown in Cisco's proprietary code.

	If this claim element is not literally infringed, it is infringed under the doctrine of equivalents. Cisco's Catalyst 9100 and Aironet Access Points perform the same function of sampling other nodes to determine a new potential parent mesh node for connecting with said at least one mesh node in the same way by using radios to regularly scan for and broadcast potential new parents in an RF environment, while maintaining the traffic flow to the old parent before transfer to a new potential parent, and achieves the same result of ensuring the seamless transfer of data flow and a good user experience without degrading performance. Moreover, any differences between the functionality of the Cisco Accused Products and the claimed element are insignificant or insubstantial because Cisco's mesh networks solicit and the MAP learns all of the available neighbors back to a RAP to determine the best path. Packets must be buffered to prevent packet loss when a node goes off channel or the parent is switched. A person skilled in the relevant art would consider any difference between the claimed invention and the Cisco Accused Products to be minor and insubstantial. MeshDynamics asserts that this claim element is a software limitation. Pursuant to P.R. 3-1(g) and Judge Schroeder's standard discovery order, MeshDynamics will identify what Cisco source code satisfies this limitation 30 days after Cisco's complete production of source code or at such other time as the parties may agree to.
2.d. wherein sampling times are coordinated among multiple mesh nodes having a common current parent node whereby the common current parent node sends tokens to each of its children in a round-robin manner.	Cisco's Catalyst 9100 and Aironet Access Points in the Cisco Wireless Mesh Network comprise a mesh network wherein sampling times are coordinated among multiple mesh nodes having a common current parent node whereby the common current parent node sends tokens to each of its children in a round-robin manner. In a Cisco Wireless Mesh Network (802.11 Wi-Fi Mesh), Catalyst 9100 and Aironet Series Access Point parent nodes (RAP or MAP) send out beacon frames and other control frames to children (MAPs) to manage how resources are allocated between the parent and child nodes. These frames provide essential information including network parameters (SSID, supported rates, channel information, etc.), parent node status (whether the node is available to accept new child nodes), and link quality (such as signal strength), etc. This could include information elements with Action frames, like Channel Switch Announcement, that can be used to tell a child to go off-channel and scan, which is not a part of the beacon frame. Other control frames, *e.g.*, trigger frames and PS-Poll frames may be used to coordinate or schedule a child/client to go off-channel. The time interval between two consecutive beacon frames is called the beacon interval and is 100ms by default. Source: https://documentation.meraki.com/MR/Wireless_Troubleshooting/Analyzing_Wireless_Packet_Captures On information and belief, the common current parent sends tokens with, or in, the beacon messages (or other control frames) that coordinate the sampling times in a round robin manner, such that each of the children can sample at appropriate times and processing efficiencies are maintained. The implementation of such tokens is enabled in Cisco's proprietary code and may take the form of flags, contention free notices, request/response messages, or other notifications or permissions.

	On information and belief, Cisco's proprietary mesh network operates the same or similar to Target Wake Time ("TWT") in Wi-Fi 6. TWT is a feature in Wi-Fi 6 that allows devices to negotiate specific times to wake up and communicate with the access point, optimizing power consumption and improving network efficiency. Access points negotiate a "TWT agreement" specifying when the device will send or receive data. If this claim element is not literally infringed, it is infringed under the doctrine of equivalents. Cisco's Catalyst 9100 and Aironet Access Points perform the same function of seamless parent node switching in a mesh network in the same way by coordinating sampling times with periodic transmissions and exchanges of broadcast packets (which may be set by or sent at the beacon interval), and achieves the same result of ensuring the seamless transfer of data flow and a good user experience without degrading performance. Moreover, any differences between the functionality of the Cisco Accused Products and the claimed element are insignificant or insubstantial because Cisco's mesh networks achieve coordinated and seamless transfer of data flows during parent switching. A person skilled in the relevant art would consider any difference between the claimed invention and the Cisco Accused Products to be minor and insubstantial. MeshDynamics asserts that this claim element is a software limitation. Pursuant to P.R. 3-1(g) and Judge Schroeder's standard discovery order, MeshDynamics will identify what Cisco source code satisfies this limitation 30 days after Cisco's complete production of source code or at such other time as the parties may agree to.
Claim 3	**Cisco's Wireless Mesh Network with Catalyst and Aironet Access Points**
3.pre. A mesh network comprising: a plurality of mesh nodes;	Cisco's Wireless Mesh Network (a component of the Cisco Unified Wireless Network solution) comprises a plurality of Wi-Fi mesh nodes (*e.g.*, Cisco Catalyst 9100 and Aironet Series Access Points). Cisco Catalyst 9100 and Aironet Access Points support Wi-Fi capabilities. The Catalyst series is a follow-up from the Cisco Aironet series access points, and the Aironet and Catalyst Access Points contain the same mesh networking capabilities, as shown below in Cisco's documentation and guides that apply to both product lines: Q. Which Cisco access points support Wi-Fi 6? A. Cisco Catalyst 9100 enterprise-class access points support Wi-Fi 6 capabilities, extending the power of intent-based networking with hardware and software innovations. The Cisco Catalyst 9100 APs offer resiliency and security while enabling intelligence at the network edge.

Q. What is the portfolio transition from the Cisco Aironet Series to the Cisco Catalyst 9100 platform?

A. The Cisco Catalyst 9100 Access Points consist of the Cisco Catalyst 9105, 9115, 9120, 9130, 9136, 9162, 9164, 9166 and 9166D1, and outdoor 9163E Series. These access points are the follow-ups to the Cisco Aironet 1815, 1850, 2800, and 3800 Series Access Points, respectively. The Cisco Catalyst 9100 Access Points come equipped with Wi-Fi 6/6E capabilities, a better industrial design, and improved RF performance, and deliver reliability, security, and intelligence at scale.

Source: https://www.cisco.com/c/en/us/products/collateral/wireless/catalyst-9100ax-access-points/nb-06-802-11ax-faq-cte-en.html

Cisco Aironet 1560 Series Outdoor Access Points

Product Type	Outdoor and Industrial Wireless
Status	End of Sale EOL Details
Series Release Date	05-JUL-2016
End-of-Sale Date	31-JAN-2023
End-of-Support Date	31-JAN-2028

This product is supported by Cisco, but is no longer being sold. Ready for an upgrade? The Cisco Catalyst 9124AX Series Access Points offer greater performance and functionality.

Source: https://www.cisco.com/c/en/us/support/wireless/aironet-1560-series/series.html

Mesh deployments are supported on the Cisco Catalyst 9100 Access Points:

Q. Will Mesh deployment be supported on the Catalyst 9124 Access Points?

A. Yes. Mesh deployments will be supported on the Catalyst 9124 Access Points. Embedded Wireless Controller deployment is also supported with the Catalyst 9124 Access Point acting as a controller for up to 100 APs.

Source: https://www.cisco.com/c/en/us/products/collateral/wireless/catalyst-9100ax-access-points/nb-06-802-11ax-faq-cte-en.html

In addition to the Wave 1 and Wave 2 access points, mesh deployments are supported on the Cisco Catalyst 9100 Access Points, including, *e.g.*, Catalyst 9124 Access Points, Catalyst 9130 Access Points and "AX" access points:

> **Families of mesh APs**
>
> The two families of mesh APs available are the Cisco Wave 1 APs and the Cisco Wave 2 APs + the AX APs. These two families of mesh APs have different capabilities and features, and they are not fully compatible with each other. The Cisco Wave 1 APs do not support the same feature set as the Cisco Wave 2 + AX APs.

Source: https://www.cisco.com/c/en/us/td/docs/wireless/controller/9800/17-15/config-guide/b_wl_17_15_cg/m_mesh_ewlc.html; *see also* https://www.cisco.com/c/en/us/td/docs/wireless/controller/9800/16-12/config-guide/b_wl_16_12_cg/mesh-access-points.html

> From this release, mesh support is included in the Cisco Catalyst 9130AX Series Access Points. All traditional capabilities of mesh are included in the Cisco Catalyst 9130AX Series APs operating in Cisco IOS XE Dublin 17.12.1.

Source: https://www.cisco.com/c/en/us/td/docs/wireless/controller/ewc/17-13/config-guide/ewc_cg_17_13/mesh_access_points.html

Cisco Catalyst 9100 Access Points (with the Cisco Aironet series access points) can be deployed in a Cisco Wireless Mesh Network with a controller and software, such as the Catalyst 9800 Controller and Cisco DNA and Prime Infrastructure. Cisco Aironet and Catalyst series access points are both identified as components of a Cisco wireless mesh network:

Mesh Network Components

This section describes the mesh network components.

The Cisco wireless mesh network has four core components:

- Cisco C9800 and IOS-XE 17.1
- Cisco Aironet and Catalyst series access points
- Cisco PI and Cisco DNA Center
- Mesh software architecture

Mesh networking employs Cisco Aironet 1540, 1560, or 1570 Series access points and the latest Catalyst 9124AX Series outdoor mesh access points; Catalyst 9800 Series wireless controllers; and Cisco DNA Center to provide scalable, central management and mobility between indoor and outdoor deployments. The CAPWAP protocol manages the connection of mesh access points to the network.

- Cisco Aironet Wave 1 indoor APs: 1700, 2700, and 3700 series.
- Cisco Aironet Wave 2 indoor APs: 1815i, 1815m, 1830, 1850, 2800, 3800, and 4800 Series.

Source: https://www.cisco.com/c/dam/en/us/td/docs/wireless/controller/9800/17-1/deployment-guide/c9800-mesh-rel-17-1.pdf; https://www.cisco.com/c/en/us/products/collateral/wireless/unified-wireless-network-sg.html#12Mesh; *see also* https://www.cisco.com/c/en/us/td/docs/wireless/controller/technotes/8-8/b_mesh_88.pdf

Cisco Wireless Mesh Networks organize the wireless access points ("mesh nodes") in a mesh network.

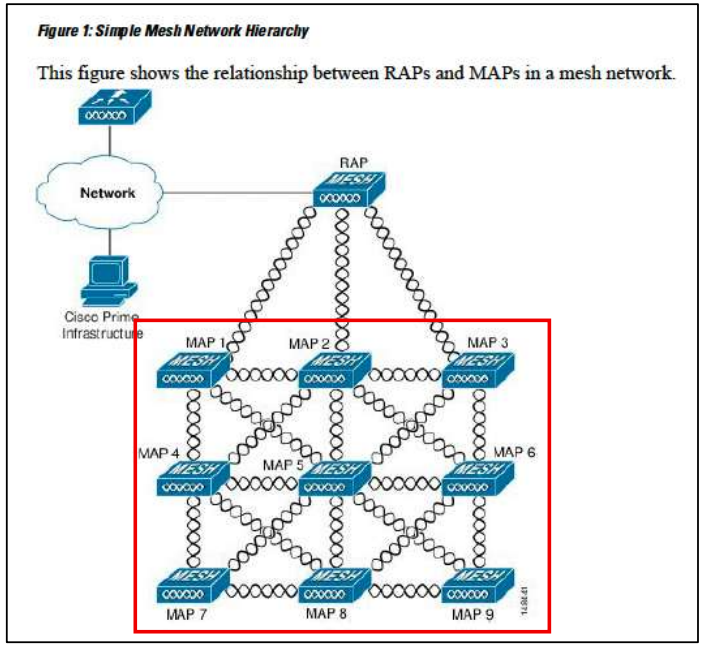

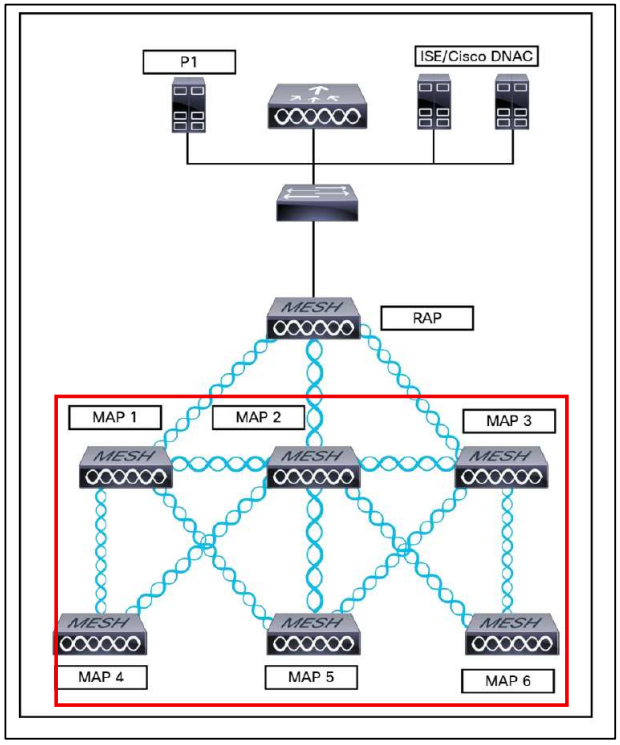

Source: https://www.cisco.com/c/en/us/td/docs/wireless/controller/technotes/8-8/b_mesh_88.pdf; https://www.cisco.com/c/en/us/products/collateral/wireless/unified-wireless-network-sg.html#12Mesh

3.a. wherein each node within said plurality of nodes comprises at least three radios further including:	Cisco's Catalyst 9100 and Aironet Access Points in the Cisco Wireless Mesh Network comprise a mesh network wherein each node within said plurality of nodes comprises at least three radios. As shown *supra* in claim 2, Cisco's Catalyst 9100 and Aironet Access Points comprise at least three radios. For example, Cisco Catalyst 9130AX Wi-Fi 6 access point is tri-radio (2.4 GHz + 5 GHz with dual-5GHz backhaul using Flexible Radio Assignment). One radio can be used for client access, the other used flexibly for backhaul or scanning at two different channels. Each of the 2.4GHz and 5GHz bands have several different non-interfering channels for radio operation. For instance, channels 1, 6 and 11 on the 2.4 GHz band do not interfere. The 5-GHz radio supports the 5.15 GHz, 5.25 GHz, 5.47 GHz, and 5.8 GHz bands, and there are 24 non-overlapping channels, offering more flexibility and less congestion.

Flexible Radio Assignment (FRA) with tri-radio mode	FRA allows the access points to intelligently determine the operating mode of serving radios based on the RF environment and traffic demands. The access points can operate in the following modes: • Dual-radio mode: One 8x8 5 GHz and one 4x4 2.4 GHz. One radio will serve clients on the 5-GHz band, while the other serves clients on the 2.4-GHz band. • Tri-radio mode: * Dual 4x4 5 GHz and one 4x4 2.4 GHz. With two 4x4 5-GHz and one 4x4 2.4-GHz radios (tri-radio) inside the access point, client device capacity can be increased on demand. The access point's default mode is dual radio with 8x8 5 GHz and 4x4 2.4 GHz. It has the ability to split the 8x8 radio into two separate 4x4 5-GHz radios through software, thereby enabling the benefits of FRA while allowing the 2.4-GHz radio to remain active.

Source: https://www.cisco.com/c/en/us/products/collateral/wireless/catalyst-9100ax-access-points/nb-06-cat-9130-ser-ap-ds-cte-en.html

Cisco Access Points with Tri-Radio

This topic describes the Tri-Radio feature for Cisco Access Points (APs).

Access Points with three radios are designed for high density environments. The APs by default run one dedicated 2.4-GHz 4x4 mode radio and one 5-GHz 8x8 mode radio. In the default mode, the radios are managed by the Flexible Radio Assignment (FRA), and the Dual Radio Mode is in the disabled state indicating that the radios have either been assigned as client serving 8x8 radio or have not yet been evaluated by FRA.

When you enable the dual radio mode setting, the 8x8 radio is split to two independent 5-GHz 4x4 radios. In this mode, slot 1 and slot 2 are active independent 4x4 radio interfaces. They can serve different user groups with different assigned channels.

Source: https://www.cisco.com/c/en/us/td/docs/wireless/controller/9800/17-2/config-guide/b_wl_17_2_cg/cisco_access_points_with_tri_radio.pdf

There is also a Cisco RF ASIC (Software-Defined Radio), as described in Cisco's datasheet that functions a dedicated monitoring radio, enabling spectrum scanning and finding a potential new parent for connection on the mesh nodes uplink radio.

	Cisco RF ASIC — The Cisco RF Application-Specific Integrated Circuit (ASIC) is a fully integrated Software-Defined Radio (SDR) that can perform advanced RF spectrum analysis and delivers features such as Cisco CleanAir, Wireless Intrusion Prevention System (WIPS), FastLocate, and Dynamic Frequency Selection (DFS) detection. If this claim element is not literally infringed, it is infringed under the doctrine of equivalents. Cisco's Catalyst 9100 and Aironet Access Points perform the same function of determining a new potential parent mesh node for connecting with at least one mesh node in the same way by using radios to regularly scan for and track potential new parents in an RF environment, with radios operating at different frequencies and channels, and achieves the same result by determining the best parent mesh node for optimal network performance. Moreover, any differences between the functionality of the Cisco Accused Products and the claimed element are insignificant or insubstantial because Cisco's mesh networks deploy multiple dual-radio (or tri-radio) mesh access points to find the best path through the network for data traffic by scanning for new parents. A person skilled in the relevant art would consider any difference between the claimed invention and the Cisco Accused Products to be minor and insubstantial. MeshDynamics asserts that this claim element is a software limitation. Pursuant to P.R. 3-1(g) and Judge Schroeder's standard discovery order, MeshDynamics will identify what Cisco source code satisfies this limitation 30 days after Cisco's complete production of source code or at such other time as the parties may agree to.
3.b. a first relay radio operating on a first RF channel at a first point in time and dedicated to uplink connections to a single current parent node; a second relay radio operating on a second RF channel at a first point in time dedicated to downlink connections to	Cisco's Catalyst 9100 and Aironet Access Points in the Cisco Wireless Mesh Network comprise a mesh network with a first relay radio operating on a first RF channel at a first point in time and dedicated to uplink connections to a single current parent node and a second relay radio operating on a second RF channel at a first point in time dedicated to downlink connections to zero or more child nodes. Cisco's Catalyst 9100 and Aironet Access Points support multiple relay radios, including one or more radios for wireless backhaul and uplink/downlink connection to the parent node. Cisco's access point radio(s) can be a "dedicated" when being used for the purpose of uplink to the parent node or downlink to zero or more child nodes. Different channels are available for operating the uplink connection, including MU-MIMO and OFDMA technology for splitting channels for uplink to a parent and downlink connections to zero or more child nodes. For example, Cisco Catalyst 9130AX Wi-Fi 6 access point is tri-radio (2.4 GHz + 5 GHz with dual-5GHz using Flexible Radio Assignment) that supports mesh. Radios are used flexibly for backhaul (uplink and downlink) at different channels.

zero or more child nodes; and

Cisco Catalyst 9130AX Series Wireless Access Point Features

The C9130AX series AP is a wireless controller-based product, and supports:

- Four radios, a dual-band 5 GHz (8x8) flexible radio with 2.4 GHz and 4x4 5 GHz, a single-band 5 GHz radio, and an omni IoT radio that can be used with a BLE device.
- Four dual-band and four single-band 5 GHz integrated antennas on the C9130AXI AP models (C9130AXI-x and C9130AXI-EWC-x).

Note The 'x' in the model numbers represents the regulatory domain. For information on supported regulatory domains, see theAP Model Numbers and Regulatory Domains.

- Integrated internal antennas that are omni directional in azimuth, for both 2.4 GHz and 5 GHz bands.
- External antennas on the C9130AXE AP model (C9130AXE-x and C9130AXE-EWC-x).
- Multiuser Multiple-Input Multiple-Output (MU-MIMO) technology for uplink and downlink.
- Orthogonal Frequency Division Multiple Access (OFDMA)-based scheduling for both uplink and downlink.
- Multigigabit Ethernet (mGig)

Source: https://www.cisco.com/c/en/us/td/docs/wireless/access_point/9130ax/quick/guide/ap9130ax-getstart.html

Cisco Access Points with Tri-Radio

This topic describes the Tri-Radio feature for Cisco Access Points (APs).

Access Points with three radios are designed for high density environments. The APs by default run one dedicated 2.4-GHz 4x4 mode radio and one 5-GHz 8x8 mode radio. In the default mode, the radios are managed by the Flexible Radio Assignment (FRA), and the Dual Radio Mode is in the disabled state indicating that the radios have either been assigned as client serving 8x8 radio or have not yet been evaluated by FRA.

When you enable the dual radio mode setting, the 8x8 radio is split to two independent 5-GHz 4x4 radios. In this mode, slot 1 and slot 2 are active independent 4x4 radio interfaces. They can serve different user groups with different assigned channels.

Source: https://www.cisco.com/c/en/us/td/docs/wireless/controller/9800/17-2/config-guide/b_wl_17_2_cg/cisco_access_points_with_tri_radio.pdf

In addition, while 5 GHz is often used for the primary backhaul (communication between access points), both the 2.4 GHz and 5GHz radios are configurable to be used for backhaul, *e.g.*, uplink and downlink at different frequencies, for example, when Universal Backhaul Access (UBA) is enabled.

.The Cisco indoor mesh access points are equipped with the following two simultaneously operating radios:

- From rel 8.2 2.4 GHz radio used for data backhaul and client access if UBA is enable
- 5-GHz radio used for data backhaul and client access if Universal Backhaul Access is enabled

The 5-GHz radio supports the 5.15 GHz, 5.25 GHz, 5.47 GHz, and 5.8 GHz bands.

Source: https://www.cisco.com/c/en/us/td/docs/wireless/technology/mesh/8-6/b_mesh_86/m_mesh-network-components.html; https://www.cisco.com/c/dam/en/us/td/docs/wireless/controller/technotes/8-5/cisco-enterprise-mobility-design-guide-8-5.pdf

With Mesh Serial Backhaul, two of the radios are reserved for backhaul. The Mesh Serial Backhaul feature in a mesh access point (MAP) allows different channels for uplink and downlink access, thus improving backhaul bandwidth and extending universal access. One radio is used as the uplink radio and a different one is used as the downlink radio, and use different channels.

Mesh serial backhaul

Serial backhaul enables us to use different channels on different backhauls, which helps in reducing interference and maximizing throughput. The intention is that in units with third and fourth radios, two of the radios are reserved for backhaul.

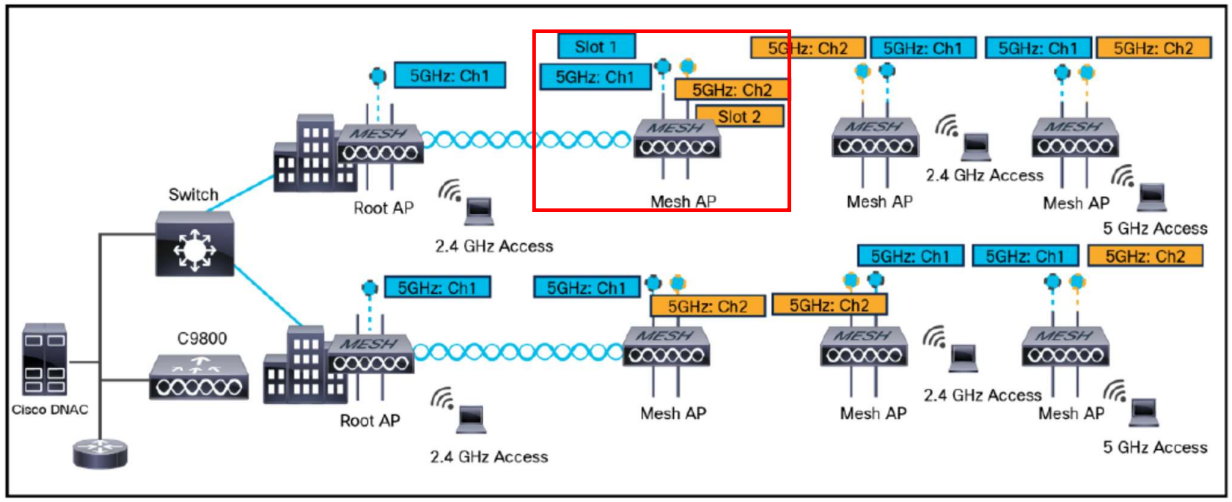

Source: https://www.cisco.com/c/en/us/products/collateral/wireless/unified-wireless-network-sg.html#12Mesh; https://www.cisco.com/c/en/us/td/docs/wireless/controller/9800/17-7/config-guide/b_wl_17_7_cg/m_mesh_ewlc.html#mesh-backhaul-24ghz-5ghz

If these claim elements are not literally infringed, they are infringed under the doctrine of equivalents. Cisco's Catalyst 9100 and Aironet Access Points perform the same function of determining a new potential parent mesh node for connecting with at least one mesh node in the same way by using radios to regularly scan for and track potential new parents in an RF environment, with radios operating at different frequencies and channels, and achieves the same result by determining the best parent mesh node for optimal network performance. Moreover, any differences between the functionality of the Cisco Accused Products and the claimed elements are insignificant or insubstantial because Cisco's mesh networks deploy multiple dual-radio (or tri-radio) mesh access points to find the best path through the network for data traffic by scanning for new parents. A person skilled in the relevant art would consider any difference between the claimed invention and the Cisco Accused Products to be minor and insubstantial.

MeshDynamics asserts that this claim element is a software limitation. Pursuant to P.R. 3-1(g) and Judge Schroeder's standard discovery order, MeshDynamics will identify what Cisco source code satisfies this limitation 30 days after Cisco's complete production of source code or at such other time as the parties may agree to.

3.c. a dedicated scanning radio operating on a third RF channel at a first point in time and	*See supra* discussion for claim elements 2.a and 3.a, the contents of which are incorporated herein by reference.

configured to scan a Radio Frequency (RF) environment to discover new potential parent mesh nodes for connection with said first relay radio;	
3.d. said first, second, and third RF channels are different from each other	*See supra* discussion for claim elements 2.a, 2.b, 3.a and 3.b, the contents if which are incorporated herein by reference.
3.e. wherein after said dedicated scanning radio discovers a potential new parent node, said first relay radio samples the RF link to said potential new parent node using its uplink radio and concurrent with said sampling, packets to be sent to the mesh node from its current parent node are buffered by the current parent node, and packets to be sent from the mesh node to its current parent node are buffered by the mesh node wherein sampling times are coordinated among multiple mesh nodes having a common current parent node whereby the common current parent node sends tokens to each of its	Cisco's Catalyst 9100 and Aironet Access Points in the Cisco Wireless Mesh Network comprise a mesh network wherein after said dedicated scanning radio discovers a potential new parent node, said first relay radio samples the RF link to said potential new parent node using its uplink radio and concurrent with said sampling, packets to be sent to the mesh node from its current parent node are buffered by the current parent node, and packets to be sent from the mesh nod e to its current parent node are buffered by the mesh node wherein sampling times are coordinated among multiple mesh nodes having a common parent node whereby the common current parent node sends tokens to each of its children in a round-robin manner. Catalyst 9100 and Aironet Access Points in Cisco Wireless Mesh Networks use AWPP to determine the best path through the MAPs to a RAP. This includes selection of a parent mesh node and establishing a parent-child relationship. AWPP takes RF details into account. During solicitation, the MAP learns all of the available neighbors back to a RAP, determines which neighbor offers the best path and then synchronizes with that neighbor.

children in a round-robin manner.	**Adaptive Wireless Path Protocol** The Adaptive Wireless Path Protocol (AWPP) is designed specifically for wireless mesh networking to provide ease of deployment, fast convergence, and minimal resource consumption. AWPP takes advantage of the CAPWAP WLAN, where client traffic is tunneled to the controller and is therefore hidden from the AWPP process. Also, the advance radio management features in the CAPWAP WLAN solution are available to the wireless mesh network and do not have to be built into AWPP. AWPP enables a remote access point to dynamically find the best path back to a RAP for each MAP that is part of the RAP's bridge group (BGN). Unlike traditional routing protocols, AWPP takes RF details into account. To optimize the route, a MAP actively solicits neighbor MAP. During the solicitation, the MAP learns all of the available neighbors back to a RAP, determines which neighbor offers the best path, and then synchronizes with that neighbor. The path decisions of AWPP are based on the link quality and the number of hops. AWPP automatically determines the best path back to the CAPWAP controller by calculating the cost of each path in terms of the signal strength and number of hops. After the path is established, AWPP continuously monitors conditions and changes routes to reflect changes in conditions. AWPP also performs a smoothing function to signal condition information to ensure that the ephemeral nature of RF environments does not impact network stability. Source: https://www.cisco.com/c/en/us/td/docs/wireless/controller/technotes/8-8/b_mesh_88.pdf; https://www.cisco.com/c/dam/en/us/td/docs/wireless/controller/9800/17-1/deployment-guide/c9800-mesh-rel-17-1.pdf at 12; https://www.cisco.com/c/en/us/products/collateral/wireless/unified-wireless-network-sg.html#12Mesh As shown *supra* in claim elements 2.a-2.d (which are incorporated herein by reference), a dedicated scanning radio discovers neighbors and potential new parent nodes. AWPP follows a sampling process in selecting parents for a MAP with a radio backhaul, including generating a list of channels with neighbors by passive scanning in the scan state, which is a subset of all backhaul channels. The channels with the neighbors are sought by actively scanning in the seek state and the backhaul channel is changed to the best neighbor.

Criteria to Choose the Best Parent

AWPP follows this process in selecting parents for a RAP or MAP with a radio backhaul:

- A list of channels with neighbors is generated by passive scanning in the *scan* state, which is a subset of all backhaul channels.
- The channels with neighbors are sought by actively scanning in the *seek* state and the backhaul channel is changed to the channel with the best neighbor.
- The parent is set to the best neighbor and the parent-child handshake is completed in the *seek* state.
- Parent maintenance and optimization occurs in the *maintain* state.

This algorithm is run at startup and whenever a parent is lost and no other potential parent exists, and is usually followed by CAPWAP network and controller discovery. All neighbor protocol frames carry the channel information.

Parent maintenance occurs by the child node sending a directed NEIGHBOR_REQUEST to the parent and the parent responding with a NEIGHBOR_RESPONSE.

Parent optimization and refresh occurs by the child node sending a NEIGHBOR_REQUEST broadcast on the same channel on which its parent resides, and by evaluating all responses from neighboring nodes on the channel.

A parent mesh access point provides the best path back to a RAP. AWPP uses ease to determine the best path. Ease can be considered the opposite of cost, and the preferred path is the path with the higher ease.

Source: https://www.cisco.com/c/en/us/td/docs/wireless/controller/technotes/8-8/b_mesh_88.pdf; *see also* https://www.cisco.com/c/en/us/products/collateral/wireless/unified-wireless-network-sg.html#12Mesh

As shown *supra* in claim elements 2.a-2.d (which are incorporated herein by reference), during the process, when the access points go "off-channel," packets to be sent to a child node from the current parent node are buffered by the current parent, and packets to be sent from the child node to its current parent are buffered by the child, as shown in the illustration below. On information and belief, details regarding packet transfer during parent node switching will be shown in Cisco's proprietary code.

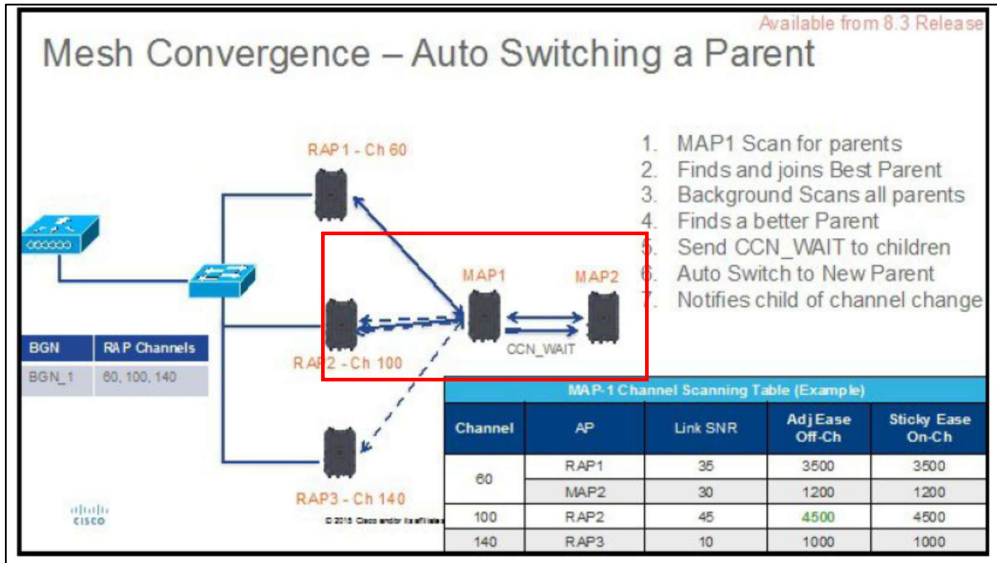

The illustration below shows Mesh convergence and Parent Auto Switching when the "ease" value dictates switching to a better parent is prompted by new "ease value" even if the original parent is still available.

https://www.cisco.com/c/en/us/td/docs/wireless/controller/technotes/8-8/b_mesh_88.pdf; *see also* https://www.cisco.com/c/en/us/support/docs/wireless/wireless-lan-controller-software/214393-configure-rrm-to-defer-off-channel-scann.html (describing delays associated with buffering the client traffic while the APs are performing off-channel scanning)

As shown *supra* in claim elements 2.a-2.d (which are incorporated herein by reference), sampling times are coordinated among multiple mesh nodes having a common current parent node whereby the common current parent node sends tokens to each of its children in a round-robin manner.

MeshDynamics asserts that this claim element is a software limitation. Pursuant to P.R. 3-1(g) and Judge Schroeder's standard discovery order, MeshDynamics will identify what Cisco source code satisfies this limitation 30 days after Cisco's complete production of source code or at such other time as the parties may agree to.