Trials@uspto.gov
571-272-7822

Paper 20
Date: October 1, 2025

UNITED STATES PATENT AND TRADEMARK OFFICE

BEFORE THE PATENT TRIAL AND APPEAL BOARD

GOOGLE LLC, CELLCO PARTNERSHIP D/B/A VERIZON WIRELESS,
VERIZON CORPORATE SERVICES GROUP INC.,
T-MOBILE USA, INC., SPRINT LLC F/K/A SPRINT CORP.,
and AT&T SERVICES, INC.,
Petitioner,

v.

HEADWATER RESEARCH LLC,
Patent Owner.

IPR2024-00942
IPR2024-00943
Patent 8,589,541 B2[1]

Before HYUN J. JUNG, SCOTT B. HOWARD,
and STEPHEN E. BELISLE, *Administrative Patent Judges.*

HOWARD, *Administrative Patent Judge*.

JUDGMENT
Final Written Decision
Determining All Challenged Claims Unpatentable
35 U.S.C. § 318(a)

---

[1] The parties are not authorized to use this style caption unless later permitted.

I. INTRODUCTION

A. Background and Summary

In these *inter partes* reviews, instituted pursuant to 35 U.S.C. § 314, Google LLC, Cellco Partnership d/b/a Verizon Wireless, Verizon Corporate Services Group Inc., T Mobile USA, Inc., Sprint LLC f/k/a Sprint Corp., and AT&T Services, Inc. (collectively "Petitioner") challenging claims 2–23, 26, 41–60, 63, 64, 91–152, and 155–171 ("the challenged claims") of U.S. Patent No. 8,589,541 B2 (Ex. 1001, "the '541 patent"), owned by Headwater Research LLC ("Patent Owner").

As explained in detail below, the references applied against the challenged claims are identical in each of the cases. Petitioner relies on the same declarant submitting an identical declaration in each proceeding for testimonial evidence. Under these circumstances, we determine that a combined Final Decision will promote a just, speedy, and inexpensive resolution of these proceedings. *See* 37 C.F.R. §§ 42.5(a), 42.122(a) (2023).

The Board has jurisdiction under 35 U.S.C. § 6(b) (2024). This Final Written Decision issues pursuant to 35 U.S.C. § 318(a). For the reasons that follow, we determine that Petitioner has shown by a preponderance of the evidence that the challenged claims are unpatentable.

1. IPR2024-00942 Procedural History

Petitioner filed a Petition requesting *inter partes* review of claims 1–23, 26, 41–60, 63, 64, 155–157, and 160–171 of the '541 patent. Paper 1[2] ("Petition" or "Pet."). Patent Owner filed a statutory disclaimer disclaiming certain claims of the '541 patent, including challenged claim 1. Ex. 3001.

[2] Unless otherwise noted, all citations are to IPR2024-00942.

We instituted an *inter partes* review of claims 2–23, 26, 41–60, 63, 64, 155–157, and 160–171 on all grounds of unpatentability alleged in the Petition. Paper 10 ("Institution Decision" or "Inst. Dec.").

After institution of trial, Patent Owner filed a Response (Paper 12, "PO Resp."), Petitioner filed a Reply to Patent Owner's Response (Paper 14), and Patent Owner filed a Sur-reply to Petitioner's Reply (Paper 18, "PO Sur-reply").

2. IPR2024-00943 Procedural History

Petitioner filed a Petition requesting *inter partes* review of claims 1, 91–152, 158, and 159 of the '541 patent. IPR2024-00943, Paper 1, 1 ("943Pet."). However, Patent Owner filed a statutory disclaimer disclaiming certain claims of the '541 patent, including challenged claim 1. Ex. 3001. We instituted an *inter partes* review of claims 91–152, 158, and 159 on all grounds of unpatentability alleged in the Petition. IPR2024-00943, Paper 6.

After institution of trial, Patent Owner filed a Response (IPR2024-00943, Paper 10), Petitioner filed a Reply to Patent Owner's Response (IPR2024-00943, Paper 14), and Patent Owner filed a Sur-reply to Petitioner's Reply (IPR2024-00943, Paper 18).

B. Real Parties in Interest

Petitioner identifies Google LLC, Cellco Partnership d/b/a Verizon Wireless, Verizon Corporate Services Group Inc., T-Mobile USA, Inc., Sprint LLC f/k/a Sprint Corp., AT&T Services, Inc., AT&T Mobility LLC, and AT&T Enterprises LLC as the real parties in interest. Pet. 81; 943Pet. 90.

Patent Owner identifies Headwater Research LLC as the real party in interest. Paper 8, 1 (Patent Owner's Mandatory Notices); IPR2024-00943, Paper 8, 1 (Patent Owner's Mandatory Notices).

C. Related Matters

Petitioner indicates that "[t]he '541 patent is, or has been, involved" in the following proceedings:

1. *Headwater Research LLC v. Verizon Communications Inc.*, 2:23-cv-00352 (E.D. Tex. Jul. 28, 2023)
2. *Headwater Research LLC v. AT&T Inc.*, 2:23-cv-00397 (E.D. Tex. Sept. 1, 2023)
3. *Headwater Research LLC v. AT&T Inc.*, 2:23-cv-00398 (E.D. Tex. Sept. 1, 2023)
4. *Headwater Research LLC v. T-Mobile US, Inc.*, 2:23-cv-00377 (E.D. Tex. Aug. 21, 2023)
5. *Headwater Research LLC v. T-Mobile US, Inc.*, 2:23-cv-00379 (E.D. Tex. Aug. 21, 2023).

Pet. 82; 943Pet. 91. Petitioner further states that above proceedings 2 and 3 have been consolidated and above proceedings 4 and 5 have been consolidated. Pet. 82, nn.4–5; 943Pet. 91, nn.4–5.

Patent Owner identifies the above proceedings (but omitting proceedings 3 and 5) and additionally identifies the following PTAB proceeding:

1. *Google LLC v. Headwater Research LLC*, IPR2024-00944 (PTAB).

Paper 8, 1; IPR2024-00943, Paper 8, 1. We take Official Notice that we did not institute trial in that *inter partes* review proceeding. IPR2024-00944, Paper 17 (Institution Decision).

D. The '541 patent (Ex. 1001)

The '541 patent is titled "Device-Assisted Services for Protecting Network Capacity" and relates to software "of a wireless end-user device" aimed at addressing the "growing digital networking demand" for "user capacity" without "degrad[ing] overall network service experience" (e.g., without overly "consum[ing] the available [network] capacity"). Ex. 1001, codes (54), (57), 7:35–55.

Figure 14 is reproduced below.

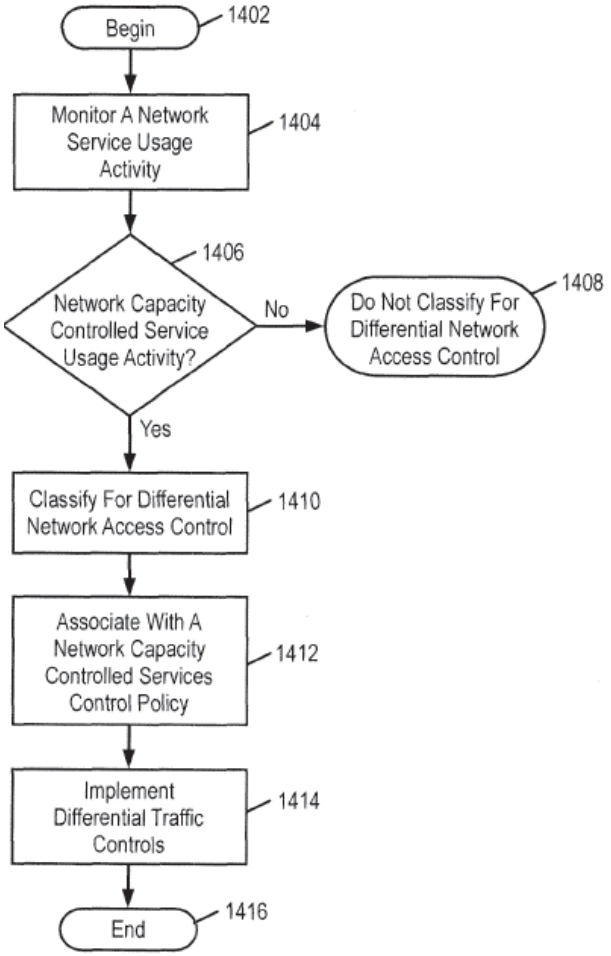

Figure 14 "illustrates a flow diagram for device assisted services (DAS) for protecting network capacity." Ex. 1001, 8:47–49; *see also id.* at 69:5–38 (describing Figure 14 in detail).

Step 1402 begins the process. Ex. 1001, 69:7. Step 1404 monitors the network service usage activity of a wireless network device. *Id.* at 69:7–10. Step 1406 determines whether the monitored network service usage activity is a network capacity controlled service. *Id.* at 69:10–12. If the answer is no, then at step 1408, "the network service usage activity is not classified for differential network access control." *Id.* at 69:12–15. But, if the answer is yes, then "the network service usage activity is classified (e.g., into one or more network capacity controlled services) for differential network access control for protecting network capacity." *Id.* at 69:15–20. The "classifying the network service usage activity includes classifying the network service usage activity into one or more of a plurality of classification categories for differential network access control for protecting network capacity," such as "a background services classification and/or a background priority state classification." *Id.* at 69:20–27. Based on the particular classification of the network service usage activity for differential network access control (e.g., "background services classification"), step 1412 associates the network service usage activity with a network capacity controlled services control policy to facilitate differential network access control for protecting network capacity. *Id.* at 69:28–32. Step 1414 implements differential network access control for protecting network capacity by implementing different traffic controls for all or some of the network service usage activities (e.g., based on a network busy state or

another criteria/measure). *Id.* at 69:33–37. Step 1416 completes the process. *Id.* at 69:37–38.

Figure 18 is reproduced below.

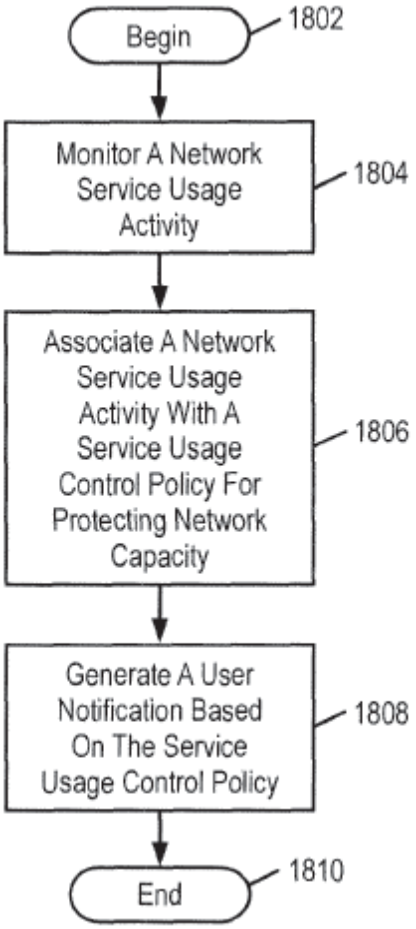

Figure 18 "illustrates another flow diagram for device assisted services (DAS) for protecting network capacity." Ex. 1001, 8:59–61; *see also id.* at 70:57–71:3 (describing Figure 18). Step 1802 begins the process. *Id.* at 70:59. Step 1804 monitors the network service usage activities of a wireless network device. *Id.* at 70:59–61. Step 1806 associates a network service usage activity (e.g., a network capacity controlled service) with a service usage control policy (e.g., a network capacity controlled services policy) based on a classification of the network service usage activity for differential

network access control for protecting network capacity. *Id.* at 70:61–71:1. Step 1808 generates a user notification based on the service usage control policy. *Id.* at 71:1–2. Step 1810 completes the process. *Id.* at 71:2–3.

E. Illustrative Claim

Claim 1 was the only independent claim. Claim 3 depends from independent claim 1 and is illustrative of the claimed invention. Claims 1 and 3 are reproduced below.

> 1. [1a] A non-transitory computer-readable storage medium storing machine-executable instructions that, when executed by one or more processors of a wireless end-user device, cause the one or more processors to:
>
> [1b] identify a service usage activity of the wireless end-user device, the service usage activity being associated with a first software component of a plurality of software components on the wireless end user device,
>
> [1c] the service usage activity comprising one or more prospective or successful communications over a wireless network;
>
> [1d] determine whether the service usage activity comprises a background activity;
>
> [1e] determine at least an aspect of a policy based on a user input obtained through a user interface of the wireless end-user device or based on information from a network element,
>
> [1f] the policy to be applied if the service usage activity is the background activity, the policy at least for controlling the service usage activity; and
>
> [1g] if it is determined that the service usage activity is the background activity, apply the policy.
>
> 3. The non-transitory computer-readable storage medium recited in claim 1, wherein the one or more prospective or successful communications over the wireless network

> comprise a communication associated with a network access, background signaling, a cloud synchronization service, an information feed, a download, an e-mail, a chat client, a security update, a peer-to-peer networking application update, a report of a behavior associated with the wireless end-user device, or a combination of these.

Ex. 1001, 110:14–31, 110:39–47 (bracketed material reflects limitations as argued by Petitioner (Pet. viii–ix)).

F. Prior Art and Asserted Grounds

Petitioner asserts that the challenged claims would have been unpatentable on the following grounds:

Claim(s) Challenged	35 U.S.C. §[3]	Reference(s)/Basis
3–6, 8–23, 26, 45, 49, 50, 58–60, 64, 157, 165, 169, 171	102	Rao[4]
3–6, 8–23, 26, 45, 49, 50, 58–60, 64, 157, 165, 169, 171	103(a)	Rao
1, 2, 7, 41–43, 46, 63, 91–96, 99, 102–138, 140–152, 155, 156, 158–164, 166–168, 170	103(a)	Rao, Fadell[5]
44, 47, 48, 51–57	103(a)	Rao, Freund[6]

[3] The Leahy-Smith America Invents Act ("AIA") included revisions to 35 U.S.C. §§ 102 and 103 that became effective on March 16, 2013. Because the '541 patent has an application filing date of May 11, 2011, we apply the pre-AIA version of the statutory basis for unpatentability. *See* Ex. 1001, code (22).

[4] US 2006/0039354 A1, published Feb. 23, 2006 (Ex. 1002).

[5] US 2010/0017506 A1, published Jan. 21, 2010 (Ex. 1003).

[6] US 5,987,611, issued Nov. 16, 1999 (Ex. 1004).

Claim(s) Challenged	35 U.S.C. §[3]	Reference(s)/Basis
97, 98, 100, 101, 139	103(a)	Rao, Fadell, Freund

Petitioner also relies on the testimony of Andrew Wolfe, Ph.D. (Ex. 1015). Dr. Wolfe was not cross-examined.

II. ANALYSIS

A. *Legal Standards*

1. Anticipation

A patent claim is unpatentable under 35 U.S.C. § 102 if "the four corners of a single, prior art document describe every element of the claimed invention, either expressly or inherently, such that a person of ordinary skill in the art could practice the invention without undue experimentation." *Advanced Display Sys., Inc. v. Kent State Univ.*, 212 F.3d 1272, 1282 (Fed. Cir. 2000). "A single prior art reference may anticipate without disclosing a feature of the claimed invention if such feature is necessarily present, or inherent, in that reference." *Allergan, Inc. v. Apotex Inc.*, 754 F.3d 952, 958 (Fed. Cir. 2014). Moreover, the reference must also "disclose[] within the four corners of the document not only all of the limitations claimed but also all of the limitations arranged or combined in the same way as recited in the claim." *Net MoneyIN, Inc. v. Verisign, Inc.*, 545 F.3d 1359, 1371 (Fed. Cir. 2008). However, "the reference need not satisfy an *ipsissimis verbis* test." *In re Gleave*, 560 F.3d 1331, 1334 (Fed. Cir. 2009).

2. Obviousness

In *Graham v. John Deere Co. of Kansas City*, 383 U.S. 1 (1966), the Supreme Court set out a framework for assessing obviousness under 35 U.S.C. § 103 that requires consideration of four factors: (1) the "level of ordinary skill in the pertinent art," (2) the "scope and content of the prior

art," (3) the "differences between the prior art and the claims at issue," and (4) if in evidence, "secondary considerations" of non-obviousness such as "commercial success, long-felt but unsolved needs, failure of others, etc." *Id.* at 17–18. "While the sequence of these questions might be reordered in any particular case," *KSR Int'l Co. v. Teleflex Inc.*, 550 U.S. 398, 407 (2007), the U.S. Court of Appeals for the Federal Circuit has repeatedly emphasized that "it is error to reach a conclusion of obviousness until all those factors are considered," *WBIP, LLC v. Kohler Co.*, 829 F.3d 1317, 1328 (Fed. Cir. 2016). Because Patent Owner does not address objective evidence of non-obviousness, we focus solely on the first three *Graham* factors.

B. Level of Ordinary Skill in the Art

The level of ordinary skill in the pertinent art at the time of the invention is a factor in how we construe patent claims. *See Phillips v. AWH Corp.*, 415 F.3d 1303, 1312–13 (Fed. Cir. 2005) (en banc). It is also one of the factors we consider when determining whether a patent claim is obvious over the prior art. *See Graham*, 383 U.S. at 17–18.

Factors pertinent to a determination of the level of ordinary skill in the art include "(1) the educational level of the inventor; (2) type of problems encountered in the art; (3) prior art solutions to those problems; (4) rapidity with which innovations are made; (5) sophistication of the technology; and (6) educational level of active workers in the field." *Envtl. Designs, Ltd. v. Union Oil Co. of Cal.*, 713 F.2d 693, 696–97 (Fed. Cir. 1983) (citing *Orthopedic Equip. Co. v. All Orthopedic Appliances, Inc.*, 707 F.2d 1376, 1381–82 (Fed. Cir. 1983)). "Not all such factors may be present in every

case, and one or more of these or other factors may predominate in a particular case." *Id.*

Petitioner argues that a person having ordinary skill in the art "would have at least a bachelor's degree in computer science, computer engineering, or a similar field, and approximately two years of industry or academic experience in a field related to computer software development and/or computer networking." Pet. 2 (citing Ex. 1015 ¶¶ 50–52). Petitioner further argues that "[w]ork experience can substitute for education, and additional education can substitute for work experience." *Id.* at 2–3 (citing Ex. 1015 ¶¶ 50–52).

Because Petitioner's proposed level of ordinary skill in the art is consistent with the field of the invention of the '541 patent and not disputed by Patent Owner (*see* PO Resp.), we adopt Petitioner's formulation of the person having ordinary skill in the art.

C. Claim Construction

We apply the same claim construction standard used in the federal courts, in other words, the claim construction standard that would be used to construe the claim in a civil action under 35 U.S.C. § 282(b), which is articulated in *Phillips v. AWH Corp.*, 415 F.3d 1303 (Fed. Cir. 2005) (en banc). *See* 37 C.F.R. § 42.100(b). Under the *Phillips* standard, the "words of a claim 'are generally given their ordinary and customary meaning,'" which is "the meaning that the term would have to a person of ordinary skill in the art in question at the time of the invention, i.e., as of the effective filing date of the patent application." *Phillips*, 415 F.3d at 1312–13.

Petitioner states "[n]o terms require construction to resolve this Petition." Pet. 3. Patent Owner does not propose any claim constructions. *See* PO Resp.

For the purposes of this Decision, we need not expressly construe any claim terms. *See Nidec Motor Corp. v. Zhongshan Broad Ocean Motor Co.*, 868 F.3d 1013, 1017 (Fed. Cir. 2017) (noting that "we need only construe terms 'that are in controversy, and only to the extent necessary to resolve the controversy'" (quoting *Vivid Techs., Inc. v. Am. Sci. & Eng'g, Inc.*, 200 F.3d 795, 803 (Fed. Cir. 1999))).

D. Anticipation and Obviousness of Claims 3–6, 8–23, 26, 45, 49, 50, 58–60, 64, 157, 165, 169, and 171 by Rao

1. Overview of Rao

Rao is titled "Systems and Methods for Client-Side Application-Aware Prioritization of Network Communications." Ex. 1002, code (54). Rao's invention "generally relates to optimizing peer-to-peer network communications, and in particular, to techniques for application-aware prioritizations of network communications on a client." *Id.* ¶ 2.

Rao identifies a problem of processing network communications in the order that communications are generated by client applications of a user's device. Ex. 1002 ¶ 3. As an example, Rao states that "although an application is running in the foreground and currently in active use by the user, a network packet [earlier] generated or received for an application running in the background may be processed ahead of a network packet generated or received for the application running in the foreground." *Id.*

Figure 1C is reproduced below.

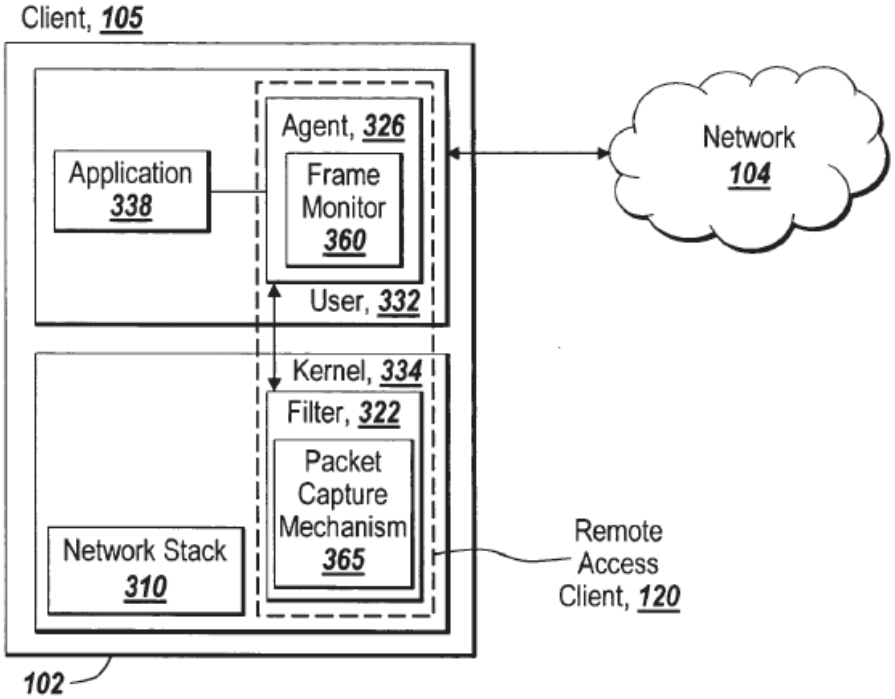

Figure 1C illustrates "a block diagram . . . of a remote access client . . . for network communications." Ex. 1002 ¶ 62. Figure 1C also illustrates a computing device 102 operating as client 105 via network 104 and including user space 332 and kernel space 334. *Id.* ¶ 99. User space 332 includes application 338, agent 326, and frame monitor 360 (of the agent 326) having logic that applies policies to received network packets. *Id.* ¶¶ 99, 108. Kernel space 334 includes network stack 310, filter 322 that determines action taken upon packets, and packet capture mechanism (PCM) 365 (of filter 322) that intercepts network packets. *Id.* ¶¶ 99–104, 180.

Agent 326 and filter 322 form the remote access client (RAC) 120. Ex. 1002 ¶ 99. Agent 326 provides RAC 120 a filtering table that PCM 365 of RAC 120 uses to selectively intercept/forward outbound network packets to frame monitor 360 of agent 326. *Id.* ¶ 104.

Figure 5A is reproduced below.

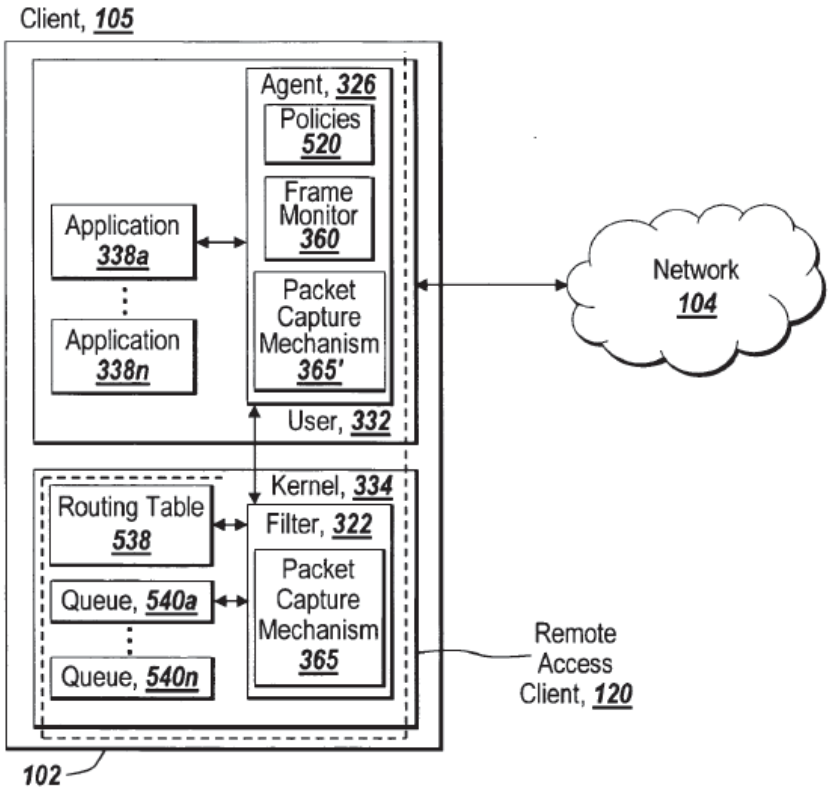

Figure 5A illustrates "block diagram depicting an environment of a client for providing client-side application-aware prioritization techniques." Ex. 1002 ¶ 70. Figure 5A shows client computing device 102, 105 similar, but not identical to, the one shown in Figure 1A. *Compare* Fig. 5A, *with* Fig. 1A.

Unlike in the Figure 1A embodiment, RAC 120 of the kernel space 334 includes queues 540a–540n that queue and prioritize network packets intercepted by PCM 365. *Id.* ¶ 180. Queues 540a–540n are associated with respective applications 338a–338n of the client 105 and organized by levels of priority, e.g., high, medium, low. *Id.* Routing table 538 dictates how agent 326 routes the network packets. *Id.* ¶ 181.

Further, unlike in the Figure 1A embodiment, RAC 120 of user space 332 includes policies 520 specifying client-side prioritizations of network packets generated by the applications 338a–338n. Ex. 1002 ¶ 182. For

example, the policies may prioritize, based on the respective communication protocols of applications 338a–338n, the payload sizes of the network packets, and/or whether a given application is running in the foreground or background of client 105. *Id.*

Figure 5B is reproduced below.

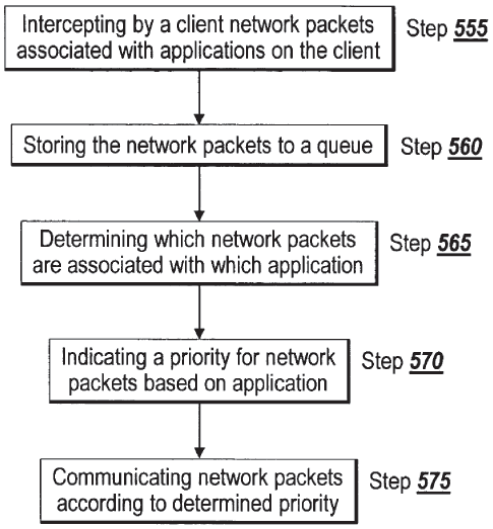

Figure 5B illustrates "a flow diagram depicting . . . [the] client-side application-aware prioritization" (Ex. 1002 ¶ 71) of the Figure 1A and Figure 5A embodiments (*id.* ¶ 184). Step 555 intercepts a network packet generated by one of applications 338a–338n. *Id.* Step 560 stores the intercepted network packet to one of queues 540a–540n. *Id.* Step 565 determines a priority of the intercepted, queued network packet based on the priority for the respective one of applications 338a–338n. *Id.* Steps 570 and 575 respectively indicate the determined priority for the network packet and accordingly communicate the network packet. *Id.*

2. Analysis of Claim 3 (Anticipation)

a) Limitation 1a: The Preamble[7]

The preamble of claim 1 recites "[a] non-transitory computer-readable storage medium storing machine-executable instructions that, when executed by one or more processors of a wireless end-user device, cause the one or more processors to." Ex. 1001, 110:14–17. Petitioner argues that Rao discloses the preamble. Pet. 7; *see also* Ex. 1015 ¶¶ 68–73.

After reviewing Petitioner's arguments and information regarding the preamble, including the Wolfe Declaration, which are not substantively addressed by Patent Owner (PO Resp. 1), we are persuaded that Petitioner sufficiently demonstrates that Rao discloses the preamble of claim 1.[8] Our specific findings are set forth below.

Rao discloses "computing device 102" which includes a central processing unit and a main memory. Ex. 1002 ¶ 118, Figs. 1D–1E. Computing device 102 includes storage 120 which stores, *inter alia*, remote access client software 120. *Id.* at Fig. 1D. A person having ordinary skill in the art would have understood that computing device 102 may be a wireless device. Ex. 1015 ¶ 72 ("[C]omputing device 102 may include a network interface 118 to interface to a Local Area Network (LAN), ***Wide Area Network (WAN)*** or the Internet through a variety of connections including, but not limited to, standard telephone lines, LAN or ***WAN links*** (e.g.,

---

[7] Because claim 3 depends from claim 1, our analysis includes the limitations set forth in claim 1.

[8] Because Petitioner has sufficiently shown that the prior art discloses the preamble, we need not determine at this time whether the preamble is limiting. *See Nidec*, 868 F.3d at 1017.

802.11, T1, T3, 56 kb, X.25), broadband connections (e.g., ISDN, Frame Relay, ATM), ***wireless connections***, or some combination of any or all of the above." (quoting Ex. 1002 ¶ 125)); *see also* Ex. 1002 ¶ 100 (describing the use of a wireless protocol).

b) Limitation 1b: Identifying a Service

Limitation 1b recites "identify a service usage activity of the wireless end-user device, the service usage activity being associated with a first software component of a plurality of software components on the wireless end-user device." Ex. 1001, 110:17–21. Petitioner argues Rao discloses that limitation. Pet. 7–10; *see also* Ex. 1015 ¶¶ 74–83.

After reviewing Petitioner's arguments and information regarding the limitation 1b, including the Wolfe Declaration, which are not substantively addressed by Patent Owner (PO Resp. 1), we are persuaded that Petitioner sufficiently demonstrates that Rao discloses limitation 1b. Our specific findings are set forth below.

Rao discloses network packets which are communicated over the wireless network. *See, e.g.*, Ex. 1002 ¶¶ 41–46, 101–106, Figs. 1A, 1B, 5A, 5B. A person having ordinary skill in the art would have understood such packets to be "a service usage activity." Ex. 1015 ¶ 83. Those network packets are associated with one of the applications 338a–338n (a first software component) of a wireless end-user device. Ex. 1002 ¶¶ 179, 184, 188, Fig. 5A; Ex. 1015 ¶¶ 76–77.

Rao further discloses identifying those network packets (service usage activity). Ex. 1015 ¶¶ 78–82. Specifically, Rao discloses intercepting the network packets, storing them in a queue, and determining with what

application each is associated. Ex. 1002 Fig. 5B (steps 555, 560, and 565), ¶¶ 185–188; *see also* Ex. 1002 ¶¶ 78–82. A person having ordinary skill in the art "would have understood that inspecting and associating a network packet is identifying a packet and its contents, or that at a minimum inspecting and associating a network packet requires identifying a network packet." Ex. 1015 ¶ 82.

c) Limitation 1c: Prospective or Successful Communication

Limitation 1c recites "the service usage activity comprising one or more prospective or successful communications over a wireless network." Ex. 1001, 110:21–23. Petitioner argues Rao discloses that limitation. Pet. 10–11; *see also* Ex. 1015 ¶¶ 84–86.

After reviewing Petitioner's arguments and information regarding the limitation 1c, including the Wolfe Declaration, which are not substantively addressed by Patent Owner (PO Resp. 1), we are persuaded that Petitioner sufficiently demonstrates that Rao discloses limitation 1c. Our specific findings are set forth below.

Rao discloses that "remote access client 120" "intercept[s] network traffic of any of the applications 338*a*-338*n* of the client 105," where remote access client 120 of computing device 102 "is connected to network 104." Ex. 1002 ¶¶ 180 (first two quotations), 179 (last quotation). That can include a wireless network. Ex. 1002 ¶ 125. Rao further discloses that "packet capture mechanism 365" may "obtain inbound and/or outbound packets of the client 105, such as the network traffic associated with application 338." *Id.* ¶ 110; *see also id.* ¶ 185 ("Any inbound and/or

outbound network packets of an application 338a-338n may be intercepted by the remote access client 120 of the present invention.”).

A person having ordinary skill in the art would have understood that “Rao’s intercepting, inspecting, and/or storing network packets associated with network 104 in queues before communicating them from the queues teaches identifying one or more ***prospective*** communications over a wireless network.” Ex. 1015 ¶ 86 (citing Ex. 1002 ¶ 184). Additionally, a person having ordinary skill in the art would have also understood that “Rao’s intercepting ‘inbound . . . [network packets] of the client 105 . . . associated with application 338’ teaches identifying one or more successful communications over a wireless network.” *Id.* (quoting Ex. 1002 ¶ 184).

d) Limitation 1d: Determining Background Activity

Limitation 1d recites “determine whether the service usage activity comprises a background activity.” Ex. 1001, 110:23–24. Petitioner argues Rao discloses that limitation. Pet. 11–13; *see also* Ex. 1015 ¶¶ 87–90.

After reviewing Petitioner’s arguments and information regarding the limitation 1d, including the Wolfe Declaration, which are not substantively addressed by Patent Owner (PO Resp. 1), we are persuaded that Petitioner sufficiently demonstrates that Rao discloses limitation 1d. Our specific findings are set forth below.

Rao discloses that after intercepting the network packets, remote access client 120 “determines the association of network packets with applications 338a-338n in order to determine priorities and apply any priority based policies 520.” Ex. 1002 ¶ 187; *see also id.* at Fig 5B (step 565: “Determining which network packets are associated with each

application"). This includes "determin[ing] whether the application 338a-338n associated with the network packet is running in the foreground or the background of the client 105." *Id.* ¶ 188. A person having ordinary skill in the art would have understood that "by determining whether network packets are associated with an application 'running in the background,' Rao's remote access client 120 determines that the service usage activity associated with that application 'comprises a background activity.'" Ex. 1015 ¶ 89. A person having ordinary skill in the art would have further understood that "by determining whether network packets are associated with an application running in the background of client 105, Rao's remote access client 120 determines whether the service usage activity associated with a first software component comprises a background activity, as claimed." *Id.*

e) Limitation 1e: Determining an Aspect of a Policy

Limitation 1e recites "determine at least an aspect of a policy based on a user input obtained through a user interface of the wireless end-user device or based on information from a network element." Ex. 1001, 110:24–27. Petitioner argues Rao discloses that limitation. Pet. 13–15; *see also* Ex. 1015 ¶¶ 91–95.

After reviewing Petitioner's arguments and information regarding the limitation 1e, including the Wolfe Declaration, which are not substantively addressed by Patent Owner (PO Resp. 1), we are persuaded that Petitioner sufficiently demonstrates that Rao discloses limitation 1e. Our specific findings are set forth below.

Rao discloses that "remote access client 120 may have one or more policies 520 [(a policy)] for specifying client-side prioritization of network communications related to applications 338a-338n." Ex. 1002 ¶ 182. Rao further discloses that the policies may be "provided by or downloaded [to agent 326] via the gateway 340" (a network element) over network 104. *Id.* ¶ 183. In addition, Rao discloses that "a user" may "configur[e]" an aspect of a policy through "a user interface, graphical or otherwise, design[ed] and constructed for configuring or specifying the policies 520." *Id.* Rao further discloses that agent 326 is part of remote access client 120 (*id.* at Fig. 5A), which is a wireless end-user device (Section II.D.2.b, *supra*).

f) Limitation 1f: Policy for Background Activity

Limitation 1f recites "the policy to be applied if the service usage activity is the background activity, the policy at least for controlling the service usage activity." Ex. 1001, 110:27–29. Petitioner argues Rao discloses that limitation. Pet. 15–16; *see also* Ex. 1015 ¶¶ 97–101.

After reviewing Petitioner's arguments and information regarding the limitation 1f, including the Wolfe Declaration, which are not substantively addressed by Patent Owner (PO Resp. 1), we are persuaded that Petitioner sufficiently demonstrates that Rao discloses limitation 1f. Our specific findings are set forth below.

Rao discloses packet prioritization relating to network communications: "[T]he remote access client 120 may have one or more policies 520 for specifying client-side prioritization of network communications related to applications 338a-338n running on application." Ex. 1002 ¶ 182. "[T]he polices 520 [may] define prioritization based on

whether an application is running in the foreground or the background of the client 105." *Id.* "[T]he policies 520 may be specified conditionally, such as if one application 338a is running, a second application 338b may have a higher or lower priority." *Id.* As a result, "one or more queues 540a-540n may be used for network packets intercepted but not prioritized because a policy 520 does not . . . apply to the network packet, or the policies 520 indicate to ignore or not process the network packet for prioritization." *Id.* A person having ordinary skill in the art would have understood that Rao's policies "are conditional and apply based on the characteristics of the applications, such as whether the applications (and thus, the associated network communications/service usage activities) are running in the foreground or background." Ex. 1015 ¶ 100. Accordingly, Rao discloses "a policy to be applied if the service usage activity is the background activity." *Id.*

Rao further discloses that, after the network packets are prioritized in step 570, they are communicated "according to the determined priority" in step 575. Ex. 1002, Fig. 5B (steps 570 and 575), ¶¶ 189–195.

g) Limitation 1g: Applying to Policy

Limitation 1g recites "if it is determined that the service usage activity is the background activity, apply the policy." Ex. 1001, 110:29–31. Petitioner argues Rao discloses that limitation. Pet. 17–18; *see also* Ex. 1015 ¶¶ 106–109.

After reviewing Petitioner's arguments and information regarding the limitation 1g, including the Wolfe Declaration, which are not substantively addressed by Patent Owner (PO Resp. 1), we are persuaded that Petitioner

sufficiently demonstrates that Rao discloses limitation 1g. Our specific findings are set forth below.

Rao discloses that "agent 326 uses the policies 520 to apply a priority to network packets of applications 338a-338n in accordance with the prioritization rules specified or indicated by the policies 520," including those based on "characteristics . . . such as running in the foreground or background, to indicate priority for a network packet of the application." Ex. 1002 ¶ 189; *see also id.* at Fig. 5B (step 570). Rao further discloses that "the agent 326 indicates the priority to the filter 322 for management of network packet queues 540a-540n to apply the indicated priorities." *Id.* ¶ 190.

h) Claim 3

Claim 3 recites:

> The non-transitory computer-readable storage medium recited in claim 1, *wherein the one or more prospective or successful communications* over the wireless network comprise a communication associated with a network access, background signaling, a cloud synchronization service, an information feed, a download, *an e-mail*, a chat client, a security update, a peer-to-peer networking application update, a report of a behavior associated with the wireless end-user device, or a combination of these.

Ex. 1001, 110:39–47 (emphases added). Petitioner argues Rao discloses the additional limitation recited in claim 3. Pet. 19.

After reviewing Petitioner's arguments and information regarding the claim 3, including the Wolfe Declaration, which are not substantively addressed by Patent Owner (PO Resp. 1), we are persuaded that Petitioner

sufficiently demonstrates that Rao discloses the additional limitation recited in claim 3. Our specific findings are set forth below.

Rao states that "one or more of applications 338a-338n may provide email." Ex. 1002 ¶ 179; *see also id.* ¶ 192 ("In another embodiment, all networks packets for a type of application 338a-338n, such as an email or voice application."); Ex. 1015 ¶ 113. Additionally, as discussed above, Rao discloses that remote access client 120 intercepts, inspects, stores, and/or transmits network traffic and that the network traffic is associated with a wireless network. *See* II.D.2.c (discussing limitation 1(c)); *see also* Ex. 1002 ¶ 90 (disclosing that the client can communication over a gateway with a server running an application "providing email services such as Microsoft Exchange manufactured by the Microsoft Corporation of Redmond, Wash."); Ex. 1015 ¶¶ 112–113. Accordingly, a person having ordinary skill in the art "would have understood that Rao's communications would include the sending and receiving of emails, and that such communications would therefore 'comprise . . . communication[s] associated with' emails" as recited in claim 3. Ex. 1015 ¶ 113.

i) Conclusion Regarding Claim 3

For the reasons set forth above, Petitioner has shown by a preponderance of the evidence that claim 3 was anticipated by Rao.

3. Analysis of Claim 3 (Obviousness)

Petitioner also argues that claim 3 would have been obvious over Rao. Pet. 7–19. Patent Owner does not substantively address whether claim 3 would have been obvious over Rao. PO Resp. 1.

"[I]t is well settled that 'a disclosure that anticipates under § 102 also renders the claim invalid under § 103, for "anticipation is the epitome of obviousness."'" *Realtime Data, LLC v. Iancu*, 912 F.3d 1368, 1373 (Fed. Cir. 2019) (quoting *Connell v. Sears, Roebuck & Co.*, 722 F.2d 1542, 1548 (Fed. Cir. 1983)); *cf. Wasica Fin. GmbH v. Cont'l Auto. Sys., Inc.*, 853 F.3d 1272, 1278 n.3 (Fed. Cir. 2017) (noting that the Board's conclusion that a prior art reference rendered certain claims obvious "by virtue of its anticipation of them").

Therefore, because Petitioner shown by a preponderance of the evidence that claim 3 is anticipated by Rao, Petitioner has also shown by a preponderance of the evidence that the subject matter of claim 3 would have been obvious to a person having ordinary skill in the art.

4. Analysis of Claims 4–6, 8–19, 21–23, 45, 49, 50, 59, 60, 157, and 171

Petitioner argues that claims 4–6, 8–19, 21–23, 45, 49, 50, 59, 60, 157, and 171 are anticipated by Rao. Pet. 1, 19–39, 42. Petitioner's arguments are supported by citations to the prior art and the testimony of Dr. Wolfe. *See id.* We have reviewed Petitioner's arguments and evidence, agree with them, and, therefore, adopt Petitioner's arguments and evidence as our own.

Patent Owner does not substantively address whether claims 4–6, 8–19, 21–23, 45, 49, 50, 59, 60, 157, and 171 were anticipated by Rao. PO Resp. 1.

Accordingly, Petitioner has shown by a preponderance of the evidence that the subject matter of claims 4–6, 8–19, 21–23, 45, 49, 50, 59, 60, 157, and 171 were anticipated by Rao.

Petitioner also argues that claims 4–6, 8–19, 21–23, 45, 49, 50, 59, 60, 157, and 171 would have been obvious over Rao. Pet. 1, 19–39, 42. Patent Owner does not substantively address whether claims 4–6, 8–19, 21–23, 45, 49, 50, 59, 60, 157, and 171 would have been obvious over Rao. PO Resp. 1.

"[I]t is well settled that 'a disclosure that anticipates under § 102 also renders the claim invalid under § 103, for "anticipation is the epitome of obviousness."'" *Realtime Data*, 912 F.3d at 1373 (quoting *Connell*, 722 F.2d at 1548.

Therefore, because Petitioner shown by a preponderance of the evidence that claims 4–6, 8–19, 21–23, 45, 49, 50, 59, 60, 157, and 171 are anticipated by Rao, Petitioner has also shown by a preponderance of the evidence that the subject matter of claims 4–6, 8–19, 21–23, 45, 49, 50, 59, 60, 157, and 171 would have been obvious to a person having ordinary skill in the art.

5. Analysis of Claims 20, 26, 58, 64, 165, and 169

Petitioner argues that claim 20, 26, 58, 64, 165, and 169 would have been obvious to a person having ordinary skill in the art. Pet. 1, 30–31, 33–42. Petitioner's arguments are supported by citations to the prior art and the testimony of Dr. Wolfe. *See id.* We have reviewed Petitioner's arguments and evidence, agree with them, and, therefore, adopt Petitioner's arguments and evidence as our own.

Patent Owner does not substantively address claims 20, 26, 58, 64, 165, and 169. PO Resp. 1.

Accordingly, Petitioner has shown by a preponderance of the evidence that the subject matter of claims 20, 26, 58, 64, 165, and 169 would have been obvious to a person having ordinary skill in the art in light of Rao.

Petitioner also sets forth that claims 20, 26, 58, 64, 165, and 169 were anticipated by Rao. Pet. 1, 30–31, 33–42. We have reviewed Petitioner's arguments for each of those dependent claims. *See* Pet. 30–31, 33–42. For each of those dependent claims, the Petition appears to only argue a theory of obvious. That is, the Petition never states that the additional limitation is disclosed by Rao. *See id.*

For example, claim 26 depends from claim 1 and further recites "wherein the policy is based on a background service class." Ex. 1001, 112:49–52. We reproduce Petitioner's arguments directed to claim 26 below:

> Rao's policies 520 may "define prioritization" for network packets "based on whether an application ***is running in the foreground or the background***." [Ex. 1002] ¶ 182; *id.* ¶¶ 38–43, 180, 182, 188–89, 193, Figs. 5A, 5B. Each packet "may be placed and arranged in a priority order respective to all other . . . packets to provide a packet by packet prioritization across all applications 338a-338n and . . . network packets." *Id.* ¶ 191. It would have been obvious to determine and apply a policy assigning a specific priority to packets associated with background applications, supra [1e]-[1f], and Rao thus discloses or renders obvious assigning a priority to network communications based on whether they are characterized as background services (class of services associated with application(s) running in the background of client 105), EX-1015 ¶¶195-96; *supra* [1e], [1f].

Pet. 33–34. Although the Petition sets forth why the claim limitation would have been obvious, there is no discussion as to how the additional limitation

of claim 26—policy based on background class—is disclosed in Rao. *See id.* Similar arguments are presented for the other claims. *See* Pet. 30–31, 35–42.

Because the Petition does not sufficiently show how the additional limitations recited in claims 20, 26, 58, 64, 165, and 169 were disclosed by Rao, Petitioner has not shown by a preponderance of the evidence that claims 20, 26, 58, 64, 165, and 169 were anticipated by Rao.

E. Analysis of Remaining Claims

Petitioner argues that (1) claims 2, 7, 41–43, 46, 63, 91–96, 99, 102–138, 140–152, 155, 156, 158–164, 166–168, and 170 would have been obvious over Rao and Fadell ; (2) claims 44, 47, 48, and 51–57 would have been obvious over Rao and Freund; and (3) that claims 97, 98, 100, 101, and 139 would have been obvious over Rao, Fadell, and Freund. Pet. 1, 42–79; 943Pet. 1, 28–88. Petitioner's arguments are supported by citations to the prior art and the testimony of Dr. Wolfe. *See* Pet. 42–79; 943Pet. 28–88. We have reviewed Petitioner's arguments and evidence, agree with them, and, therefore, adopt Petitioner's arguments and evidence as our own.

Patent Owner does not substantively address claims 2, 7, 41–44, 46–48, 51–57, 63, 91–96, 99–152, 155, 156, 158–164, 166–168, and 170. PO Resp. 1; 943PO Resp. 1.

Accordingly, Petitioner has shown by a preponderance of the evidence that the subject matter of claims 2, 7, 41–44, 46–48, 51–57, 63, 91–96, 99–152, 155, 156, 158–164, 166–168, and 170 would have been obvious to a person having ordinary skill in the art based on the combination of (1) Rao and Fadell, (2) Rao and Freund, or (3) Rao, Fadell, and Freund.

III. CONCLUSION[9]

For the foregoing reasons, we conclude that Petitioner has demonstrated by a preponderance of the evidence the unpatentability of the challenged claims of the '541 patent. Specifically, Petitioner has shown by a preponderance of the evidence that claims 3–6, 8–19, 21–23, 45, 49, 50, 59, 60, 157, and 171 were anticipated by Rao; claims 3–6, 8–23, 26, 45, 49, 50, 58–60, 64, 157, 165, 169, 171 would have been obvious over Rao; claims 2, 7, 41–43, 46, 63, 155, 156, 160–164, 166–168, and 170 would have been obvious over Rao and Fadell; and claims 44, 47, 48, and 51–57 would have been obvious over Rao and Freund. However, Petitioner has not shown by a preponderance of the evidence that claims 20, 26, 58, 64, 165, and 169 were anticipated by Rao.

In summary:

[9] Should Patent Owner wish to pursue amendment of the challenged claims in a reissue or reexamination proceeding subsequent to the issuance of this decision, we draw Patent Owner's attention to the April 2019 *Notice Regarding Options for Amendments by Patent Owner Through Reissue or Reexamination During a Pending AIA Trial Proceeding*. *See* 84 Fed. Reg. 16,654 (Apr. 22, 2019). If Patent Owner chooses to file a reissue application or a request for reexamination of the challenged patent, we remind Patent Owner of its continuing obligation to notify the Board of any such related matters in updated mandatory notices. *See* 37 C.F.R. § 42.8(a)(3), (b)(2).

IPR2024-00942

Claim(s)	35 U.S.C. §	Reference(s)/Basis	Claim(s) Shown Unpatentable	Claim(s) Not Shown Unpatentable
3–6, 8–23, 26, 45, 49, 50, 58–60, 64, 157, 165, 169, 171	102(b)	Rao	3–6, 8–19, 21–23, 45, 49, 50, 59, 60, 157, 171	20, 26, 58, 64, 165, 169
3–6, 8–23, 26, 45, 49, 50, 58–60, 64, 157, 165, 169, 171	103(a)	Rao	3–6, 8–23, 26, 45, 49, 50, 58–60, 64, 157, 165, 169, 171	
2, 7, 41–43, 46, 63, 155, 156, 160–164, 166–168, 170	103(a)	Rao, Fadell	2, 7, 41–43, 46, 63, 155, 156, 160–164, 166–168, 170	
44, 47, 48, 51–57		Rao, Freund	44, 47, 48, 51–57	
Overall Outcome			2–23, 26, 41–60, 63, 64, 155–157, 160–171	

IPR2024-00943

Claim(s)	35 U.S.C. §	Reference(s)/Basis	Claim(s) Shown Unpatentable	Claim(s) Not Shown Unpatentable
91–96, 99, 102–138, 140–152, 158, 159	103(a)	Rao, Fadell	91–96, 99, 102–138, 140–152, 158, 159	
97, 98, 100, 101, 139	103(a)	Rao, Fadell, Freund	97, 98, 100, 101, 139	
Overall Outcome			91–152, 158, 159	

IV. ORDER

In consideration of the foregoing, it is hereby:

ORDERED that Petitioner has shown by a preponderance of the evidence that claims 2–23, 26, 41–60, 63, 64, 91–152, and 155–171 of the ’541 patent are unpatentable; and;

FURTHER ORDERED that because this is a Final Written Decision, parties to the proceeding seeking judicial review of the decision must comply with the notice and service requirements of 37 C.F.R. § 90.2.

FOR PETITIONER:

Erika H. Arner
Daniel C. Tucker
Alexander M. Boyer
Cara E. Regan
FINNEGAN, HENDERSON, FARABOW, GARRETT & DUNNER, LLP
erika.arner@finnegan.com
daniel.tucker@finnegan.com
alexander.boyer@finnegan.com
cara.regan@finnegan.com

Patrick D. McPherson
Kevin P. Anderson
DUANE MORRIS LLP
pdmcpherson@duanemorris.com
kpanderson@duanemorris.com

FOR PATENT OWNER:

Reza Mirzaie
Dale Chang
James Milkey
Neil Rubin
Philip Wang
RUSS AUGUST & KABAT
rmirzaie@raklaw.com
dchang@raklaw.com
jmilkey@raklaw.com
nrubin@raklaw.com
pwang@raklaw.com