US009198042B2

(12) **United States Patent**
Raleigh

(10) **Patent No.: US 9,198,042 B2**
(45) **Date of Patent: Nov. 24, 2015**

(54) **SECURITY TECHNIQUES FOR DEVICE ASSISTED SERVICES**

(71) Applicant: **Headwater Partners I LLC**, Redwood Shores, CA (US)

(72) Inventor: **Gregory G. Raleigh**, Woodside, CA (US)

(73) Assignee: **Headwater Partners I LLC**, Redwood City, CA (US)

(*) Notice: Subject to any disclaimer, the term of this patent is extended or adjusted under 35 U.S.C. 154(b) by 451 days.

(21) Appl. No.: **13/737,748**

(22) Filed: **Jan. 9, 2013**

(65) **Prior Publication Data**

US 2013/0145422 A1 Jun. 6, 2013

Related U.S. Application Data

(63) Continuation of application No. 12/694,445, filed on Jan. 27, 2010, now Pat. No. 8,391,834, which is a continuation of application No. 12/380,780, filed on Mar. 2, 2009, now Pat. No. 8,839,388.

(Continued)

(51) **Int. Cl.**
H04L 29/06 (2006.01)
H04M 11/00 (2006.01)
(Continued)

(52) **U.S. Cl.**
CPC ***H04W 12/08*** (2013.01); ***G06F 21/53*** (2013.01); ***G06F 21/55*** (2013.01);
(Continued)

(58) **Field of Classification Search**
USPC 455/405, 406, 411, 414.1, 417, 432.1; 370/352, 354; 709/203, 217, 219, 223; 726/1, 26; 705/28, 30
IPC H04M 2215/32; H04L 63/20
See application file for complete search history.

(56) **References Cited**

U.S. PATENT DOCUMENTS

5,131,020 A 7/1992 Liebesny et al.
5,283,904 A 2/1994 Carson et al.
(Continued)

FOREIGN PATENT DOCUMENTS

CA 2688553 A1 12/2008
CN 1310401 A 8/2001
(Continued)

OTHER PUBLICATIONS

"Communication Concepts for Mobile Agent Systems," by Joachim Baumann et al.; Inst. Of Parallel and Distributed High-Performance Systems, Univ. of Stuttgart, Germany, pp. 123-135, 1997.
(Continued)

Primary Examiner — Andrew Joseph Rudy
(74) *Attorney, Agent, or Firm* — James E. Harris

(57) **ABSTRACT**

Methods and systems for receiving a report from an end-user device, the report comprising information about a device service state; determining, based on the report, that a particular service policy setting of the end-user device needs to be modified, the particular service policy setting associated with a service profile that provides for access to a network data service over a wireless access network and configured to assist in controlling one or more communications between the end-user device and the wireless access network, the particular service policy setting stored in a protected partition configured to deter or prevent unauthorized modifications to the particular service policy setting; and, in response to determining that the particular service policy setting needs to be modified, sending configuration information to the end-user device, the configuration information configured to assist in modifying or allowing modifications to the particular service policy setting.

18 Claims, 11 Drawing Sheets

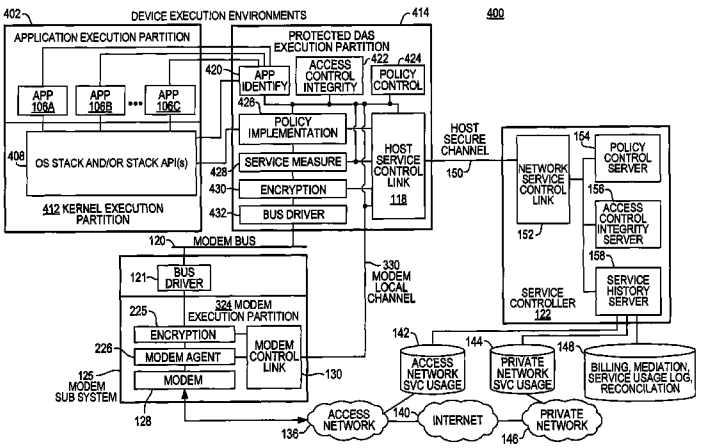

AMAZON-1065
Amazon.com Services LLC v. Headwater Research, IPR2025-01571

Related U.S. Application Data

(60) Provisional application No. 61/206,354, filed on Jan. 28, 2009, provisional application No. 61/206,944, filed on Feb. 4, 2009, provisional application No. 61/207,393, filed on Feb. 10, 2009, provisional application No. 61/207,739, filed on Feb. 13, 2009, provisional application No. 61/252,151, filed on Oct. 15, 2009, provisional application No. 61/206,354, filed on Jan. 28, 2009, provisional application No. 61/206,944, filed on Feb. 4, 2009, provisional application No. 61/207,393, filed on Feb. 10, 2009, provisional application No. 61/207,739, filed on Feb. 13, 2009.

(51) **Int. Cl.**
H04W 12/08 (2009.01)
G06F 21/53 (2013.01)
G06F 21/55 (2013.01)

(52) **U.S. Cl.**
CPC ... ***H04L 63/0428*** (2013.01); *G06F 2221/2101* (2013.01); *G06F 2221/2115* (2013.01); *G06F 2221/2149* (2013.01); *H04L 63/145* (2013.01)

(56) **References Cited**

U.S. PATENT DOCUMENTS

5,325,532 A 6/1994 Crosswy et al.
5,572,528 A 11/1996 Shuen
5,577,100 A 11/1996 McGregor et al.
5,594,777 A 1/1997 Makkonen et al.
5,630,159 A 5/1997 Zancho
5,633,484 A 5/1997 Zancho et al.
5,754,953 A 5/1998 Briancon et al.
5,774,532 A 6/1998 Gottlieb et al.
5,794,142 A 8/1998 Vanttila et al.
5,814,798 A 9/1998 Zancho
5,889,477 A 3/1999 Fastenrath
5,892,900 A 4/1999 Ginter et al.
5,903,845 A 5/1999 Buhrmann et al.
5,915,008 A 6/1999 Dulman
5,933,778 A 8/1999 Buhrmann et al.
5,940,472 A 8/1999 Newman et al.
5,974,439 A 10/1999 Bollella
5,983,270 A 11/1999 Abraham et al.
6,035,281 A 3/2000 Crosskey et al.
6,038,452 A 3/2000 Strawczynski et al.
6,047,268 A 4/2000 Bartoli et al.
6,064,878 A 5/2000 Denker et al.
6,078,953 A 6/2000 Vaid et al.
6,081,591 A 6/2000 Skoog
6,098,878 A 8/2000 Dent et al.
6,104,700 A 8/2000 Haddock et al.
6,119,933 A 9/2000 Wong et al.
6,141,686 A 10/2000 Jackowski et al.
6,148,336 A 11/2000 Thomas et al.
6,154,738 A 11/2000 Call
6,185,576 B1 2/2001 Mcintosh
6,198,915 B1 3/2001 McGregor et al.
6,226,277 B1 5/2001 Chuah
6,263,055 B1 7/2001 Garland et al.
6,292,828 B1 9/2001 Williams
6,317,584 B1 11/2001 Abu-Amara et al.
6,381,316 B2 4/2002 Joyce et al.
6,393,014 B1 5/2002 Daly et al.
6,397,259 B1 5/2002 Lincke et al.
6,418,147 B1 7/2002 Wiedeman
6,438,575 B1 8/2002 Khan et al.
6,445,777 B1 9/2002 Clark
6,449,479 B1 9/2002 Sanchez
6,477,670 B1 11/2002 Ahmadvand
6,502,131 B1 12/2002 Vaid et al.
6,505,114 B2 1/2003 Luciani
6,532,235 B1 3/2003 Benson et al.
6,532,579 B2 3/2003 Sato et al.
6,539,082 B1 3/2003 Lowe et al.
6,542,992 B1 4/2003 Peirce et al.
6,563,806 B1 5/2003 Yano et al.
6,574,321 B1 6/2003 Cox et al.
6,574,465 B2 6/2003 Marsh et al.
6,578,076 B1 6/2003 Putzolu
6,581,092 B1 6/2003 Motoyama
6,598,034 B1 7/2003 Kloth
6,603,969 B1 8/2003 Vuoristo et al.
6,606,744 B1 8/2003 Mikurak
6,628,934 B2 9/2003 Rosenberg et al.
6,631,122 B1 10/2003 Arunachalam et al.
6,639,975 B1 10/2003 O'Neal et al.
6,640,097 B2 10/2003 Corrigan et al.
6,640,334 B1 10/2003 Rasmussen
6,650,887 B2 11/2003 McGregor et al.
6,651,101 B1 11/2003 Gai et al.
6,654,814 B1 11/2003 Britton et al.
6,658,254 B1 12/2003 Purdy et al.
6,662,014 B1 12/2003 Walsh
6,678,516 B2 1/2004 Nordman et al.
6,683,853 B1 1/2004 Kannas et al.
6,684,244 B1 1/2004 Goldman et al.
6,697,821 B2 2/2004 Ziff et al.
6,725,031 B2 4/2004 Watler et al.
6,748,195 B1 6/2004 Phillips
6,754,470 B2 6/2004 Hendrickson et al.
6,757,717 B1 6/2004 Goldstein
6,763,000 B1 7/2004 Walsh
6,763,226 B1 7/2004 McZeal, Jr.
6,765,864 B1 7/2004 Natarajan et al.
6,765,925 B1 7/2004 Sawyer et al.
6,782,412 B2 8/2004 Brophy et al.
6,785,889 B1 8/2004 Williams
6,829,596 B1 12/2004 Frazee
6,829,696 B1 12/2004 Balmer et al.
6,839,340 B1 1/2005 Voit et al.
6,873,988 B2 3/2005 Herrmann et al.
6,876,653 B2 4/2005 Ambe et al.
6,882,718 B1 4/2005 Smith
6,885,997 B1 4/2005 Roberts
6,901,440 B1 5/2005 Bimm et al.
6,920,455 B1 7/2005 Weschler
6,922,562 B2 7/2005 Ward et al.
6,928,280 B1 8/2005 Xanthos et al.
6,934,249 B1 8/2005 Bertin et al.
6,947,723 B1 9/2005 Gurnani et al.
6,952,428 B1 10/2005 Necka et al.
6,957,067 B1 10/2005 Iyer et al.
6,965,667 B2 11/2005 Trabandt et al.
6,965,872 B1 11/2005 Grdina
6,967,958 B2 11/2005 Ono et al.
6,970,692 B2 11/2005 Tysor
6,982,733 B1 1/2006 McNally et al.
6,983,370 B2 1/2006 Eaton et al.
6,996,076 B1 2/2006 Forbes et al.
6,996,393 B2 2/2006 Pyhalammi et al.
6,998,985 B2 2/2006 Reisman et al.
7,002,920 B1 2/2006 Ayyagari et al.
7,007,295 B1 2/2006 Rose et al.
7,013,469 B2 3/2006 Smith et al.
7,024,200 B2 4/2006 McKenna et al.
7,027,408 B2 4/2006 Nabkel et al.
7,032,072 B1 4/2006 Quinn et al.
7,039,027 B2 5/2006 Bridgelall
7,039,037 B2 5/2006 Wang et al.
7,039,403 B2 5/2006 Wong
7,039,713 B1 5/2006 Van Gunter et al.
7,042,988 B2 5/2006 Juitt et al.
7,043,226 B2 5/2006 Yamauchi
7,043,268 B2 5/2006 Yukie et al.
7,047,276 B2 5/2006 Liu et al.
7,058,022 B1 6/2006 Carolan et al.
7,058,968 B2 6/2006 Rowland et al.
7,068,600 B2 6/2006 Cain
7,069,248 B2 6/2006 Huber
7,084,775 B1 8/2006 Smith
7,092,696 B1 8/2006 Hosain et al.
7,102,620 B2 9/2006 Harries et al.

(56) **References Cited**

U.S. PATENT DOCUMENTS

7,113,780 B2 9/2006 Mckenna et al.
7,113,997 B2 9/2006 Jayapalan et al.
7,133,695 B2 11/2006 Beyda
7,139,569 B2 11/2006 Kato
7,142,876 B2 11/2006 Trossen et al.
7,149,229 B1 12/2006 Leung
7,149,521 B2 12/2006 Sundar et al.
7,158,792 B1 1/2007 Cook et al.
7,162,237 B1 * 1/2007 Silver H04W 4/02 455/417
7,167,078 B2 1/2007 Pourchot
7,174,174 B2 2/2007 Boris et al.
7,180,855 B1 2/2007 Lin
7,181,017 B1 2/2007 Nagel et al.
7,197,321 B2 3/2007 Erskine et al.
7,200,112 B2 4/2007 Sundar et al.
7,203,169 B1 4/2007 Okholm
7,203,752 B2 4/2007 Rice et al.
7,212,491 B2 5/2007 Koga
7,222,190 B2 5/2007 Klinker et al.
7,222,304 B2 5/2007 Beaton et al.
7,224,968 B2 5/2007 Dobson et al.
7,228,354 B2 6/2007 Chambliss et al.
7,236,780 B2 6/2007 Benco et al.
7,242,668 B2 7/2007 Kan et al.
7,242,920 B2 7/2007 Morris
7,245,901 B2 7/2007 McGregor et al.
7,251,218 B2 7/2007 Jorgensen
7,260,382 B1 8/2007 Lamb et al.
7,266,371 B1 9/2007 Amin et al.
7,271,765 B2 9/2007 Stilp et al.
7,280,816 B2 10/2007 Fratti et al.
7,280,818 B2 10/2007 Clayton
7,283,561 B1 10/2007 Picher-Dempsey
7,283,963 B1 10/2007 Fitzpatrick et al.
7,286,834 B2 10/2007 Walter
7,286,848 B2 10/2007 Vireday et al.
7,289,489 B1 10/2007 Kung et al.
7,290,283 B2 10/2007 Copeland, III
7,310,424 B2 12/2007 Gehring et al.
7,313,237 B2 12/2007 Bahl et al.
7,317,699 B2 1/2008 Godfrey et al.
7,318,111 B2 1/2008 Zhao
7,320,029 B2 1/2008 Rinne et al.
7,322,044 B2 1/2008 Hrastar
7,324,447 B1 1/2008 Morford
7,325,037 B2 1/2008 Lawson
7,336,960 B2 2/2008 Zavalkovsky et al.
7,346,410 B2 3/2008 Uchiyama
7,349,695 B2 3/2008 Oommen et al.
7,353,533 B2 4/2008 Wright et al.
7,356,011 B1 4/2008 Waters et al.
7,356,337 B2 4/2008 Florence
7,366,497 B2 4/2008 Nagata
7,366,654 B2 4/2008 Moore
7,373,136 B2 5/2008 Watler et al.
7,373,179 B2 5/2008 Stine et al.
7,379,731 B2 5/2008 Natsuno et al.
7,388,950 B2 6/2008 Elsey et al.
7,391,724 B2 6/2008 Alakoski et al.
7,395,244 B1 7/2008 Kingsford
7,401,338 B1 7/2008 Bowen et al.
7,403,763 B2 7/2008 Maes
7,409,447 B1 8/2008 Assadzadeh
7,411,930 B2 8/2008 Montojo et al.
7,418,253 B2 8/2008 Kavanagh
7,418,257 B2 8/2008 Kim
7,421,004 B2 9/2008 Feher
7,444,669 B1 10/2008 Bahl et al.
7,450,591 B2 11/2008 Korling et al.
7,450,927 B1 11/2008 Creswell et al.
7,454,191 B2 * 11/2008 Dawson G06Q 10/1091 379/114.12
7,457,265 B2 11/2008 Julka et al.
7,457,870 B1 11/2008 Lownsbrough et al.
7,460,837 B2 12/2008 Diener
7,472,189 B2 12/2008 Mallya et al.
7,478,420 B2 1/2009 Wright et al.
7,486,185 B2 2/2009 Culpepper et al.
7,493,659 B1 2/2009 Wu et al.
7,496,652 B2 2/2009 Pezzutti
7,499,438 B2 3/2009 Hinman et al.
7,499,537 B2 3/2009 Elsey et al.
7,502,672 B1 3/2009 Kolls
7,508,799 B2 3/2009 Sumner et al.
7,515,608 B2 4/2009 Yuan et al.
7,515,926 B2 4/2009 Bu et al.
7,516,219 B2 4/2009 Moghaddam et al.
7,529,204 B2 5/2009 Bourlas et al.
7,535,880 B1 5/2009 Hinman et al.
7,536,695 B2 5/2009 Alam et al.
7,539,132 B2 5/2009 Werner et al.
7,540,408 B2 6/2009 Levine et al.
7,545,782 B2 6/2009 Rayment et al.
7,546,460 B2 6/2009 Maes
7,546,629 B2 6/2009 Albert et al.
7,548,976 B2 6/2009 Bahl et al.
7,551,922 B2 6/2009 Roskowski et al.
7,554,983 B1 6/2009 Muppala
7,555,757 B2 6/2009 Smith et al.
7,561,899 B2 7/2009 Lee
7,564,799 B2 7/2009 Holland et al.
7,565,141 B2 7/2009 Macaluso
7,574,509 B2 8/2009 Nixon et al.
7,574,731 B2 8/2009 Fascenda
7,580,356 B1 8/2009 Mishra et al.
7,580,857 B2 8/2009 VanFleet et al.
7,583,964 B2 9/2009 Wong
7,586,871 B2 9/2009 Hamilton et al.
7,593,417 B2 9/2009 Wang et al.
7,593,730 B2 9/2009 Khandelwal et al.
7,596,373 B2 9/2009 Mcgregor et al.
7,599,288 B2 10/2009 Cole et al.
7,609,650 B2 10/2009 Roskowski et al.
7,609,700 B1 10/2009 Ying et al.
7,610,328 B2 10/2009 Haase et al.
7,610,396 B2 10/2009 Taglienti et al.
7,614,051 B2 11/2009 Glaum et al.
7,616,962 B2 11/2009 Oswal et al.
7,617,516 B2 11/2009 Huslak et al.
7,620,041 B2 11/2009 Dunn et al.
7,620,065 B2 11/2009 Falardeau
7,620,162 B2 11/2009 Aaron et al.
7,627,314 B2 12/2009 Carlson et al.
7,627,767 B2 12/2009 Sherman et al.
7,627,872 B2 12/2009 Hebeler et al.
7,633,438 B2 12/2009 Tysowski
7,634,388 B2 12/2009 Archer et al.
7,636,574 B2 12/2009 Poosala
7,644,151 B2 1/2010 Jerrim et al.
7,644,267 B2 1/2010 Ylikoski et al.
7,647,047 B2 1/2010 Moghaddam et al.
7,650,137 B2 1/2010 Jobs et al.
7,653,394 B2 1/2010 McMillin
7,668,176 B2 2/2010 Chuah
7,668,612 B1 2/2010 Okkonen
7,668,903 B2 2/2010 Edwards et al.
7,684,370 B2 3/2010 Kezys
7,685,131 B2 3/2010 Batra et al.
7,685,254 B2 3/2010 Pandya
7,685,530 B2 3/2010 Sherrard et al.
7,693,720 B2 4/2010 Kennewick et al.
7,697,540 B2 4/2010 Haddad et al.
7,710,932 B2 5/2010 Muthuswamy et al.
7,711,848 B2 5/2010 Maes
7,720,464 B2 5/2010 Batta
7,720,505 B2 5/2010 Gopi et al.
7,720,960 B2 5/2010 Pruss et al.
7,725,570 B1 5/2010 Lewis
7,729,326 B2 6/2010 Sekhar
7,730,123 B1 6/2010 Erickson et al.
7,734,784 B1 6/2010 Araujo et al.
7,742,406 B1 6/2010 Muppala
7,746,854 B2 6/2010 Ambe et al.

(56) **References Cited**

U.S. PATENT DOCUMENTS

7,747,240 B1 6/2010 Briscoe et al.
7,747,699 B2 6/2010 Prueitt et al.
7,747,730 B1 6/2010 Harlow
7,752,330 B2 7/2010 Olsen et al.
7,756,056 B2 7/2010 Kim et al.
7,756,534 B2 7/2010 Anupam et al.
7,756,757 B1 7/2010 Oakes, III
7,760,137 B2 7/2010 Martucci et al.
7,760,711 B1 7/2010 Kung et al.
7,760,861 B1 7/2010 Croak et al.
7,774,323 B2 8/2010 Helfman
7,774,456 B1 8/2010 Lownsbrough et al.
7,778,176 B2 8/2010 Morford
7,778,643 B2 8/2010 Laroia et al.
7,792,257 B1 9/2010 Vanier et al.
7,792,538 B2 9/2010 Kozisek
7,792,708 B2 9/2010 Alva
7,797,060 B2 9/2010 Grgic et al.
7,797,204 B2 9/2010 Balent
7,797,401 B2 9/2010 Stewart et al.
7,801,523 B1 9/2010 Kenderov
7,801,783 B2 9/2010 Kende et al.
7,801,985 B1 9/2010 Pitkow et al.
7,802,724 B1 9/2010 Nohr
7,805,140 B2 9/2010 Friday et al.
7,805,606 B2 9/2010 Birger et al.
7,809,351 B1 10/2010 Panda et al.
7,817,615 B1 * 10/2010 Breau H04W 28/24 370/349
7,822,837 B1 10/2010 Urban et al.
7,826,427 B2 11/2010 Sood et al.
7,826,607 B1 11/2010 De Carvalho Resende et al.
7,843,843 B1 11/2010 Papp, III et al.
7,844,034 B1 * 11/2010 Oh H04M 3/5116 370/261
7,844,728 B2 11/2010 Anderson et al.
7,848,768 B2 12/2010 Omori et al.
7,849,161 B2 12/2010 Koch et al.
7,849,477 B2 12/2010 Cristofalo et al.
7,853,255 B2 12/2010 Karaoguz et al.
7,856,226 B2 12/2010 Wong et al.
7,860,088 B2 12/2010 Lioy
7,865,182 B2 1/2011 Macaluso
7,865,187 B2 1/2011 Ramer et al.
7,868,778 B2 1/2011 Kenwright
7,873,344 B2 1/2011 Bowser et al.
7,873,705 B2 1/2011 Kalish
7,877,090 B2 1/2011 Maes
7,881,199 B2 2/2011 Krstulich
7,881,697 B2 2/2011 Baker et al.
7,882,029 B2 2/2011 White
7,886,047 B1 2/2011 Potluri
7,890,084 B1 2/2011 Dudziak et al.
7,890,111 B2 2/2011 Bugenhagen
7,894,431 B2 2/2011 Goring et al.
7,899,039 B2 * 3/2011 Andreasen H04L 12/1403 370/354
7,899,438 B2 3/2011 Baker et al.
7,903,553 B2 3/2011 Liu
7,907,970 B2 3/2011 Park et al.
7,911,975 B2 3/2011 Droz et al.
7,912,025 B2 3/2011 Pattenden et al.
7,912,056 B1 3/2011 Brassem
7,920,529 B1 4/2011 Mahler et al.
7,921,463 B2 4/2011 Sood et al.
7,925,778 B1 4/2011 Wijnands et al.
7,929,959 B2 4/2011 DeAtley et al.
7,929,960 B2 4/2011 Martin et al.
7,929,973 B2 4/2011 Zavalkovsky et al.
7,930,327 B2 4/2011 Craft et al.
7,930,446 B2 4/2011 Kesselman et al.
7,933,274 B2 4/2011 Verma et al.
7,936,736 B2 5/2011 Proctor, Jr. et al.
7,937,069 B2 5/2011 Rassam
7,937,450 B2 5/2011 Janik
7,940,685 B1 5/2011 Breslau et al.
7,940,751 B2 5/2011 Hansen
7,941,184 B2 5/2011 Prendergast et al.
7,944,948 B2 5/2011 Chow et al.
7,945,238 B2 5/2011 Baker et al.
7,945,240 B1 5/2011 Klock et al.
7,945,945 B2 5/2011 Graham et al.
7,948,952 B2 5/2011 Hurtta et al.
7,948,953 B2 5/2011 Melkote et al.
7,948,968 B2 5/2011 Voit et al.
7,949,529 B2 5/2011 Weider et al.
7,953,808 B2 5/2011 Sharp et al.
7,953,877 B2 5/2011 Vemula et al.
7,957,020 B2 6/2011 Mine et al.
7,957,381 B2 6/2011 Clermidy et al.
7,957,511 B2 6/2011 Drudis et al.
7,958,029 B1 6/2011 Bobich et al.
7,962,622 B2 6/2011 Friend et al.
7,965,983 B1 6/2011 Swan et al.
7,969,950 B2 6/2011 Iyer et al.
7,970,350 B2 6/2011 Sheynman et al.
7,970,426 B2 6/2011 Poe et al.
7,974,624 B2 7/2011 Gallagher et al.
7,975,184 B2 7/2011 Goff et al.
7,978,627 B2 7/2011 Taylor et al.
7,978,686 B2 7/2011 Goyal et al.
7,984,130 B2 7/2011 Bogineni et al.
7,984,511 B2 7/2011 Kocher et al.
7,986,935 B1 7/2011 D'Souza et al.
7,987,496 B2 7/2011 Bryce et al.
7,987,510 B2 7/2011 Kocher et al.
7,990,049 B2 8/2011 Shioya
8,000,276 B2 8/2011 Scherzer et al.
8,000,318 B2 8/2011 Wiley et al.
8,005,009 B2 8/2011 McKee et al.
8,005,459 B2 8/2011 Balsillie
8,005,726 B1 8/2011 Bao
8,005,988 B2 8/2011 Maes
8,010,080 B1 8/2011 Thenthiruperai et al.
8,010,081 B1 8/2011 Roskowski
8,010,082 B2 8/2011 Sutaria et al.
8,015,133 B1 9/2011 Wu et al.
8,015,234 B2 9/2011 Lum et al.
8,019,687 B2 9/2011 Wang et al.
8,019,820 B2 9/2011 Son et al.
8,019,846 B2 9/2011 Roelens et al.
8,019,868 B2 9/2011 Rao et al.
8,019,886 B2 9/2011 Harrang et al.
8,023,425 B2 9/2011 Raleigh
8,024,397 B1 9/2011 Erickson et al.
8,027,339 B2 9/2011 Short et al.
8,031,601 B2 10/2011 Feroz et al.
8,032,409 B1 10/2011 Mikurak
8,032,899 B2 10/2011 Archer et al.
8,036,600 B2 10/2011 Garrett et al.
8,045,973 B2 10/2011 Chambers
8,046,449 B2 10/2011 Yoshiuchi
8,050,275 B1 11/2011 Iyer
8,050,690 B2 11/2011 Neeraj
8,050,705 B2 11/2011 Sicher et al.
8,059,530 B1 11/2011 Cole
8,060,463 B1 11/2011 Spiegel
8,064,418 B2 11/2011 Maki
8,064,896 B2 11/2011 Bell et al.
8,068,824 B2 11/2011 Shan et al.
8,068,829 B2 11/2011 Lemond et al.
8,073,427 B2 12/2011 Koch et al.
8,073,721 B1 12/2011 Lewis
8,078,140 B2 12/2011 Baker et al.
8,078,163 B2 12/2011 Lemond et al.
8,086,398 B2 12/2011 Sanchez et al.
8,086,497 B1 12/2011 Oakes, III
8,086,791 B2 12/2011 Caulkins
8,090,359 B2 1/2012 Proctor, Jr. et al.
8,090,616 B2 1/2012 Proctor, Jr. et al.
8,094,551 B2 1/2012 Huber et al.
8,095,112 B2 1/2012 Chow et al.
8,095,124 B2 1/2012 Balia
8,095,640 B2 1/2012 Guingo et al.

(56) **References Cited**

U.S. PATENT DOCUMENTS

8,095,666 B2 1/2012 Schmidt et al.
8,098,579 B2 1/2012 Ray et al.
8,099,077 B2 1/2012 Chowdhury et al.
8,099,517 B2 1/2012 Jia et al.
8,102,814 B2 1/2012 Rahman et al.
8,103,285 B2 1/2012 Kalhan
8,104,080 B2 * 1/2012 Burns G06F 9/44505 705/51
8,107,953 B2 1/2012 Zimmerman et al.
8,108,520 B2 1/2012 Ruutu et al.
8,112,435 B2 2/2012 Epstein et al.
8,116,223 B2 2/2012 Tian et al.
8,116,749 B2 2/2012 Proctor, Jr. et al.
8,116,781 B2 2/2012 Chen et al.
8,122,128 B2 2/2012 Burke, II et al.
8,122,249 B2 2/2012 Falk et al.
8,126,123 B2 2/2012 Cai et al.
8,126,396 B2 2/2012 Bennett
8,126,476 B2 2/2012 Vardi et al.
8,126,722 B2 2/2012 Robb et al.
8,130,793 B2 3/2012 Edwards et al.
8,131,256 B2 3/2012 Martti et al.
8,131,281 B1 3/2012 Hildner et al.
8,134,954 B2 3/2012 Godfrey et al.
8,135,388 B1 3/2012 Gailloux et al.
8,135,392 B2 3/2012 Marcellino et al.
8,135,657 B2 3/2012 Kapoor et al.
8,144,591 B2 3/2012 Ghai et al.
8,149,823 B2 4/2012 Turcan et al.
8,150,394 B2 * 4/2012 Bianconi H04W 8/20 370/352
8,150,431 B2 4/2012 Wolovitz et al.
8,155,155 B1 4/2012 Chow et al.
8,155,620 B2 4/2012 Wang et al.
8,155,666 B2 4/2012 Alizadeh-Shabdiz
8,155,670 B2 4/2012 Fullam et al.
8,156,206 B2 4/2012 Kiley et al.
8,160,015 B2 4/2012 Rashid et al.
8,160,598 B2 4/2012 Savoor
8,165,576 B2 4/2012 Raju et al.
8,166,040 B2 4/2012 Brindisi et al.
8,166,554 B2 * 4/2012 John H04L 63/105 726/26
8,170,553 B2 5/2012 Bennett
8,174,378 B2 5/2012 Richman et al.
8,174,970 B2 5/2012 Adamczyk et al.
8,175,574 B1 5/2012 Panda et al.
8,180,881 B2 5/2012 Seo et al.
8,180,886 B2 5/2012 Overcash et al.
8,184,530 B1 5/2012 Swan et al.
8,184,590 B2 5/2012 Rosenblatt
8,185,088 B2 5/2012 Klein et al.
8,185,093 B2 5/2012 Jheng et al.
8,185,127 B1 5/2012 Cai et al.
8,185,152 B1 5/2012 Goldner
8,185,158 B2 5/2012 Tamura et al.
8,190,122 B1 5/2012 Alexander et al.
8,190,675 B2 5/2012 Tribbett
8,191,116 B1 5/2012 Gazzard
8,191,124 B2 5/2012 Wynn et al.
8,194,549 B2 6/2012 Huber et al.
8,194,553 B2 6/2012 Liang et al.
8,194,572 B2 6/2012 Horvath et al.
8,195,093 B2 6/2012 Garrett et al.
8,195,163 B2 6/2012 Gisby et al.
8,195,661 B2 6/2012 Kalavade
8,196,199 B2 6/2012 Hrastar et al.
8,200,163 B2 6/2012 Hoffman
8,200,200 B1 6/2012 Belser et al.
8,200,509 B2 6/2012 Kenedy et al.
8,200,775 B2 6/2012 Moore
8,200,818 B2 6/2012 Freund et al.
8,204,190 B2 6/2012 Bang et al.
8,204,505 B2 6/2012 Jin et al.
8,208,788 B2 6/2012 Ando et al.
8,208,919 B2 6/2012 Kotecha
8,213,296 B2 7/2012 Shannon et al.
8,213,363 B2 7/2012 Ying et al.
8,214,536 B2 7/2012 Zhao
8,223,741 B1 7/2012 Bartlett et al.
8,224,382 B2 7/2012 Bultman
8,224,773 B2 7/2012 Spiegel
8,228,818 B2 7/2012 Chase et al.
8,229,394 B2 7/2012 Karlberg
8,229,914 B2 7/2012 Ramer et al.
8,233,433 B2 7/2012 Kalhan
8,233,883 B2 7/2012 De Froment
8,233,895 B2 7/2012 Tysowski
8,238,287 B1 8/2012 Gopi et al.
8,239,520 B2 8/2012 Grah
8,242,959 B2 8/2012 Mia et al.
8,244,241 B2 8/2012 Montemurro
8,249,601 B2 8/2012 Emberson et al.
8,254,880 B2 8/2012 Aaltonen et al.
8,254,915 B2 8/2012 Kozisek
8,255,515 B1 8/2012 Melman et al.
8,255,534 B2 8/2012 Assadzadeh
8,255,689 B2 8/2012 Kim et al.
8,259,692 B2 9/2012 Bajko
8,264,965 B2 9/2012 Dolganow et al.
8,265,004 B2 9/2012 Toutonghi
8,266,681 B2 9/2012 Deshpande et al.
8,270,955 B2 9/2012 Ramer et al.
8,270,972 B2 9/2012 Otting et al.
8,271,045 B2 9/2012 Parolkar et al.
8,271,049 B2 9/2012 Silver et al.
8,271,992 B2 9/2012 Chatley et al.
8,275,415 B2 9/2012 Huslak
8,279,067 B2 10/2012 Berger et al.
8,279,864 B2 10/2012 Wood
8,280,354 B2 10/2012 Smith et al.
8,284,740 B2 10/2012 O'Connor
8,285,249 B2 10/2012 Baker et al.
8,291,238 B2 10/2012 Ginter et al.
8,296,404 B2 10/2012 McDysan et al.
8,300,575 B2 10/2012 Willars
8,306,518 B1 11/2012 Gailloux et al.
8,307,067 B2 11/2012 Ryan
8,315,593 B2 11/2012 Gallant et al.
8,315,594 B1 11/2012 Mauser et al.
8,315,718 B2 11/2012 Caffrey et al.
8,315,999 B2 11/2012 Chatley et al.
8,320,244 B2 11/2012 Muqattash et al.
8,320,949 B2 11/2012 Matta
8,325,638 B2 12/2012 Jin et al.
8,326,319 B2 12/2012 Davis
8,326,828 B2 12/2012 Zhou et al.
8,331,223 B2 12/2012 Hill et al.
8,331,293 B2 12/2012 Sood
8,332,375 B2 12/2012 Chatley et al.
8,339,991 B2 12/2012 Biswas et al.
8,340,718 B2 12/2012 Colonna et al.
8,346,210 B2 1/2013 Balsan et al.
8,347,104 B2 1/2013 Pathiyal
8,347,362 B2 1/2013 Cai et al.
8,347,378 B2 1/2013 Merkin et al.
8,350,700 B2 1/2013 Fast et al.
8,351,592 B2 1/2013 Freeny, Jr. et al.
8,351,898 B2 1/2013 Raleigh
8,352,360 B2 1/2013 De Judicibus et al.
8,352,980 B2 1/2013 Howcroft
8,353,001 B2 1/2013 Herrod
8,355,696 B1 1/2013 Olding et al.
8,356,336 B2 1/2013 Johnston et al.
8,358,638 B2 1/2013 Scherzer et al.
8,358,975 B2 1/2013 Bahl et al.
8,363,658 B1 1/2013 Delker et al.
8,364,089 B2 1/2013 Phillips
8,364,806 B2 1/2013 Short et al.
8,369,274 B2 2/2013 Sawai
8,370,477 B2 2/2013 Short et al.
8,370,483 B2 2/2013 Choong et al.
8,374,090 B2 2/2013 Morrill et al.
8,374,592 B2 2/2013 Proctor, Jr. et al.

(56) **References Cited**

U.S. PATENT DOCUMENTS

8,375,128 B2 2/2013 Tofighbakhsh et al.
8,375,136 B2 2/2013 Roman et al.
8,385,896 B2 2/2013 Proctor, Jr. et al.
8,385,975 B2 2/2013 Forutanpour et al.
8,386,386 B1 2/2013 Zhu
8,391,262 B2 3/2013 Maki et al.
8,396,458 B2 3/2013 Raleigh
8,396,929 B2 3/2013 Helfman et al.
8,402,540 B2 3/2013 Kapoor et al.
8,406,427 B2 3/2013 Chand et al.
8,406,736 B2 3/2013 Das et al.
8,411,587 B2 4/2013 Curtis et al.
8,411,691 B2 4/2013 Aggarwal
8,422,988 B1 4/2013 Keshav
8,423,016 B2 4/2013 Buckley et al.
8,429,403 B2 4/2013 Moret et al.
8,437,734 B2 5/2013 Ray et al.
8,442,015 B2 5/2013 Behzad et al.
8,447,324 B2 5/2013 Shuman et al.
8,447,607 B2 5/2013 Weider et al.
8,447,980 B2 5/2013 Godfrey et al.
8,452,858 B2 5/2013 Wu et al.
8,461,958 B2 6/2013 Saenz et al.
8,463,232 B2 6/2013 Tuli et al.
8,468,337 B2 6/2013 Gaur et al.
8,472,371 B1 6/2013 Bari et al.
8,477,778 B2 7/2013 Lehmann, Jr. et al.
8,483,135 B2 7/2013 Cai et al.
8,483,694 B2 7/2013 Lewis et al.
8,484,327 B2 7/2013 Werner et al.
8,488,597 B2 7/2013 Nie et al.
8,489,110 B2 7/2013 Frank et al.
8,489,720 B1 7/2013 Morford et al.
8,495,181 B2 7/2013 Venkatraman et al.
8,495,227 B2 7/2013 Kaminsky et al.
8,495,360 B2 7/2013 Falk et al.
8,495,700 B2 7/2013 Shahbazi
RE44,412 E 8/2013 Naqvi et al.
8,503,455 B2 8/2013 Heikens
8,504,729 B2 8/2013 Pezzutti
8,509,082 B2 8/2013 Heinz et al.
8,514,927 B2 8/2013 Sundararajan et al.
8,516,552 B2 8/2013 Raleigh
8,520,589 B2 8/2013 Bhatt et al.
8,521,110 B2 8/2013 Rofougaran
8,522,039 B2 8/2013 Hyndman et al.
8,522,249 B2 8/2013 Beaule
8,522,337 B2 8/2013 Adusumilli et al.
8,526,329 B2 9/2013 Mahany et al.
8,526,350 B2 9/2013 Xue et al.
8,527,410 B2 9/2013 Markki et al.
8,527,662 B2 9/2013 Biswas et al.
8,528,068 B1 9/2013 Weglein et al.
8,532,610 B2 9/2013 Manning Cassett et al.
8,533,775 B2 9/2013 Alcorn et al.
8,538,394 B2 9/2013 Zimmerman et al.
8,538,458 B2 9/2013 Haney
8,543,265 B2 9/2013 Ekhaguere et al.
8,544,105 B2 9/2013 Mclean et al.
8,548,427 B2 10/2013 Chow et al.
8,554,876 B2 10/2013 Winsor
8,561,138 B2 10/2013 Rothman et al.
8,565,746 B2 10/2013 Hoffman
8,566,236 B2 10/2013 Busch
8,571,474 B2 10/2013 Chavez et al.
8,571,501 B2 10/2013 Miller et al.
8,571,598 B2 10/2013 Valavi
8,571,993 B2 10/2013 Kocher et al.
8,572,117 B2 10/2013 Rappaport
8,572,256 B2 10/2013 Babbar
8,583,499 B2 11/2013 De Judicibus et al.
8,589,955 B2 11/2013 Roundtree et al.
8,601,125 B2 12/2013 Huang et al.
8,605,691 B2 12/2013 Soomro et al.
8,631,428 B2 1/2014 Scott et al.
8,634,425 B2 1/2014 Gorti et al.
8,635,164 B2 1/2014 Rosenhaft et al.
8,644,702 B1 2/2014 Kalajan
8,644,813 B1 2/2014 Gailloux et al.
8,645,518 B2 2/2014 David
8,655,357 B1 2/2014 Gazzard et al.
8,660,853 B2 2/2014 Robb et al.
8,666,395 B2 3/2014 Silver
8,667,542 B1 * 3/2014 Bertz H04L 51/20 725/32
8,670,334 B2 3/2014 Keohane et al.
8,676,925 B1 3/2014 Liu et al.
8,693,323 B1 4/2014 McDysan
8,694,772 B2 4/2014 Kao et al.
8,701,015 B2 4/2014 Bonnat
8,705,361 B2 4/2014 Venkataraman et al.
8,706,863 B2 4/2014 Fadell
8,713,535 B2 4/2014 Malhotra et al.
8,713,641 B1 4/2014 Pagan et al.
8,719,423 B2 5/2014 Wyld
8,725,899 B2 5/2014 Short et al.
8,730,842 B2 5/2014 Collins et al.
8,732,808 B2 5/2014 Sewall et al.
8,739,035 B2 5/2014 Trethewey
8,761,711 B2 6/2014 Grignani et al.
8,780,857 B2 7/2014 Balasubramanian et al.
8,793,304 B2 * 7/2014 Lu H04L 63/101 340/1.1
8,811,991 B2 8/2014 Jain et al.
8,825,109 B2 9/2014 Montemurro et al.
8,831,561 B2 9/2014 Sutaria et al.
8,880,047 B2 11/2014 Konicek et al.
8,930,238 B2 1/2015 Coffman et al.
8,948,726 B2 * 2/2015 Smith H04W 8/183 455/406
8,949,597 B1 2/2015 Reeves et al.
8,966,018 B2 2/2015 Bugwadia et al.
8,977,284 B2 3/2015 Reed
9,002,342 B2 4/2015 Tenhunen et al.
9,014,973 B2 4/2015 Ruckart
9,049,010 B2 6/2015 Jueneman et al.
2001/0048738 A1 12/2001 Baniak et al.
2001/0053694 A1 12/2001 Igarashi et al.
2002/0022472 A1 2/2002 Watler et al.
2002/0049074 A1 4/2002 Eisinger et al.
2002/0116338 A1 8/2002 Gonthier et al.
2002/0120540 A1 8/2002 Kende et al.
2002/0131404 A1 9/2002 Mehta et al.
2002/0138601 A1 9/2002 Piponius et al.
2002/0154751 A1 10/2002 Thompson et al.
2002/0161601 A1 10/2002 Nauer et al.
2002/0164983 A1 11/2002 Raviv et al.
2002/0176377 A1 11/2002 Hamilton
2002/0188732 A1 12/2002 Buckman et al.
2002/0191573 A1 12/2002 Whitehill et al.
2002/0199001 A1 12/2002 Wenocur et al.
2003/0004937 A1 1/2003 Salmenkaita et al.
2003/0005112 A1 1/2003 Krautkremer
2003/0013434 A1 1/2003 Rosenberg et al.
2003/0018524 A1 1/2003 Fishman et al.
2003/0046396 A1 3/2003 Richter et al.
2003/0050070 A1 3/2003 Mashinsky et al.
2003/0050837 A1 3/2003 Kim
2003/0084321 A1 5/2003 Tarquini et al.
2003/0088671 A1 5/2003 Klinker et al.
2003/0133408 A1 7/2003 Cheng et al.
2003/0161265 A1 8/2003 Cao et al.
2003/0171112 A1 9/2003 Lupper et al.
2003/0182420 A1 9/2003 Jones et al.
2003/0182435 A1 9/2003 Redlich et al.
2003/0188006 A1 10/2003 Bard
2003/0188117 A1 10/2003 Yoshino et al.
2003/0220984 A1 11/2003 Jones et al.
2003/0224781 A1 12/2003 Milford et al.
2003/0229900 A1 12/2003 Reisman
2003/0233332 A1 12/2003 Keeler et al.
2003/0236745 A1 12/2003 Hartsell et al.
2004/0019539 A1 1/2004 Raman et al.
2004/0021697 A1 2/2004 Beaton et al.

(56) **References Cited**

U.S. PATENT DOCUMENTS

2004/0030705 A1 2/2004 Bowman-Amuah
2004/0039792 A1 2/2004 Nakanishi
2004/0044623 A1 3/2004 Wake et al.
2004/0047358 A1 3/2004 Chen et al.
2004/0073672 A1 4/2004 Fascenda
2004/0082346 A1 4/2004 Skytt et al.
2004/0098715 A1 5/2004 Aghera et al.
2004/0102182 A1 5/2004 Reith et al.
2004/0103193 A1 5/2004 Pandya et al.
2004/0107360 A1 6/2004 Herrmann et al.
2004/0127200 A1 7/2004 Shaw et al.
2004/0132427 A1 7/2004 Lee et al.
2004/0133668 A1 7/2004 Nicholas, III
2004/0137890 A1 7/2004 Kalke
2004/0168052 A1 8/2004 Clisham et al.
2004/0170191 A1 9/2004 Guo et al.
2004/0198331 A1 10/2004 Coward et al.
2004/0203755 A1 10/2004 Brunet et al.
2004/0203833 A1 10/2004 Rathunde et al.
2004/0225898 A1 11/2004 Frost et al.
2004/0236547 A1 11/2004 Rappaport et al.
2004/0243992 A1 12/2004 Gustafson et al.
2004/0249918 A1 12/2004 Sunshine
2004/0255145 A1 12/2004 Chow
2004/0259534 A1 12/2004 Chaudhari et al.
2004/0260766 A1 12/2004 Barros et al.
2005/0007993 A1 1/2005 Chambers et al.
2005/0009499 A1 1/2005 Koster
2005/0021995 A1 1/2005 Lal et al.
2005/0041617 A1 2/2005 Huotari et al.
2005/0048950 A1 3/2005 Morper
2005/0055291 A1 3/2005 Bevente et al.
2005/0055309 A1 3/2005 Williams et al.
2005/0055595 A1 3/2005 Frazer et al.
2005/0060266 A1 3/2005 DeMello et al.
2005/0075115 A1 4/2005 Corneille et al.
2005/0079863 A1 4/2005 Macaluso
2005/0097516 A1 5/2005 Donnelly et al.
2005/0107091 A1 5/2005 Vannithamby et al.
2005/0128967 A1 6/2005 Scobbie
2005/0135264 A1 6/2005 Popoff et al.
2005/0166043 A1 7/2005 Zhang et al.
2005/0183143 A1 8/2005 Anderholm et al.
2005/0186948 A1 8/2005 Gallagher et al.
2005/0198377 A1 9/2005 Ferguson et al.
2005/0216421 A1 9/2005 Barry et al.
2005/0228985 A1 10/2005 Ylikoski et al.
2005/0238046 A1 10/2005 Hassan et al.
2005/0239447 A1 10/2005 Holzman et al.
2005/0245241 A1 11/2005 Durand et al.
2005/0246282 A1 11/2005 Naslund et al.
2005/0250508 A1 11/2005 Guo et al.
2005/0250536 A1 11/2005 Deng et al.
2005/0254435 A1 11/2005 Moakley et al.
2005/0266825 A1 12/2005 Clayton
2005/0266880 A1 12/2005 Gupta et al.
2006/0014519 A1 1/2006 Marsh et al.
2006/0019632 A1 1/2006 Cunningham et al.
2006/0026679 A1 2/2006 Zakas
2006/0030306 A1 2/2006 Kuhn
2006/0034256 A1 2/2006 Addagatla et al.
2006/0035631 A1 2/2006 White et al.
2006/0040642 A1 2/2006 Boris et al.
2006/0045245 A1 3/2006 Aaron et al.
2006/0048223 A1 3/2006 Lee et al.
2006/0068796 A1 3/2006 Millen et al.
2006/0072451 A1 4/2006 Ross
2006/0072646 A1 4/2006 Feher
2006/0085543 A1 4/2006 Hrastar et al.
2006/0095517 A1 5/2006 O'Connor et al.
2006/0098627 A1 5/2006 Karaoguz et al.
2006/0112016 A1 5/2006 Ishibashi
2006/0114832 A1 6/2006 Hamilton et al.
2006/0135144 A1 6/2006 Jothipragasam
2006/0136882 A1 6/2006 Noonan et al.
2006/0143066 A1 6/2006 Calabria
2006/0143098 A1 6/2006 Lazaridis
2006/0156398 A1 7/2006 Ross et al.
2006/0160536 A1 7/2006 Chou
2006/0165060 A1 7/2006 Dua
2006/0168128 A1 7/2006 Sistla et al.
2006/0173959 A1 8/2006 Mckelvie et al.
2006/0174035 A1 8/2006 Tufail
2006/0178917 A1 8/2006 Merriam et al.
2006/0178918 A1 8/2006 Mikurak
2006/0183462 A1 8/2006 Kolehmainen
2006/0190314 A1 8/2006 Hernandez
2006/0199608 A1 9/2006 Dunn et al.
2006/0206709 A1 9/2006 Labrou et al.
2006/0206904 A1 9/2006 Watkins et al.
2006/0218395 A1 9/2006 Maes
2006/0233108 A1 10/2006 Krishnan
2006/0233166 A1 10/2006 Bou-Diab et al.
2006/0236095 A1 10/2006 Smith et al.
2006/0242685 A1 10/2006 Heard et al.
2006/0258341 A1 11/2006 Miller et al.
2006/0291477 A1 12/2006 Croak et al.
2007/0005795 A1 1/2007 Gonzalez
2007/0019670 A1 1/2007 Falardeau
2007/0022289 A1 1/2007 Alt et al.
2007/0025301 A1 2/2007 Petersson et al.
2007/0033194 A1 2/2007 Srinivas et al.
2007/0033197 A1 2/2007 Scherzer et al.
2007/0036312 A1 2/2007 Cai et al.
2007/0055694 A1 3/2007 Ruge et al.
2007/0060200 A1 3/2007 Boris et al.
2007/0061243 A1 3/2007 Ramer et al.
2007/0061878 A1 3/2007 Hagiu et al.
2007/0073899 A1 3/2007 Judge et al.
2007/0076616 A1 4/2007 Ngo et al.
2007/0093243 A1 4/2007 Kapadekar et al.
2007/0100981 A1 5/2007 Adamczyk et al.
2007/0101426 A1 5/2007 Lee et al.
2007/0104126 A1 5/2007 Calhoun et al.
2007/0109983 A1 5/2007 Shankar et al.
2007/0130315 A1 6/2007 Friend et al.
2007/0140113 A1 6/2007 Gemelos
2007/0140145 A1 6/2007 Kumar et al.
2007/0140275 A1 6/2007 Bowman et al.
2007/0143824 A1 6/2007 Shahbazi
2007/0147317 A1 6/2007 Smith et al.
2007/0147324 A1 6/2007 McGary
2007/0155365 A1 7/2007 Kim et al.
2007/0165630 A1 7/2007 Rasanen et al.
2007/0168499 A1 7/2007 Chu
2007/0174490 A1 7/2007 Choi et al.
2007/0192460 A1 8/2007 Choi et al.
2007/0198656 A1 8/2007 Mazzaferri et al.
2007/0213054 A1 9/2007 Han
2007/0220251 A1 9/2007 Rosenberg et al.
2007/0226225 A1 9/2007 Yiu et al.
2007/0226775 A1 9/2007 Andreasen et al.
2007/0234402 A1 10/2007 Khosravi et al.
2007/0243862 A1 10/2007 Coskun et al.
2007/0248100 A1 10/2007 Zuberi et al.
2007/0254675 A1 11/2007 Zorlu Ozer et al.
2007/0255848 A1 11/2007 Sewall et al.
2007/0259656 A1 11/2007 Jeong
2007/0259673 A1 11/2007 Willars et al.
2007/0263558 A1 11/2007 Salomone
2007/0266422 A1 11/2007 Germano et al.
2007/0274327 A1 11/2007 Kaarela et al.
2007/0280453 A1 12/2007 Kelley et al.
2007/0282896 A1 12/2007 Wydroug et al.
2007/0293191 A1 12/2007 Mir et al.
2007/0294395 A1 12/2007 Strub et al.
2007/0294410 A1 12/2007 Pandya et al.
2007/0298764 A1 12/2007 Clayton
2007/0300252 A1 12/2007 Acharya et al.
2008/0005285 A1 1/2008 Robinson et al.
2008/0005561 A1 1/2008 Brown et al.
2008/0010379 A1 1/2008 Zhao
2008/0010452 A1 1/2008 Holtzman et al.
2008/0018494 A1 1/2008 Waite et al.

(56) **References Cited**

U.S. PATENT DOCUMENTS

2008/0022354 A1 1/2008 Grewal et al.
2008/0025230 A1 1/2008 Patel et al.
2008/0032715 A1 2/2008 Jia et al.
2008/0034063 A1 2/2008 Yee
2008/0034419 A1 2/2008 Mullick et al.
2008/0039102 A1 2/2008 Sewall et al.
2008/0049630 A1 2/2008 Kozisek et al.
2008/0050715 A1 2/2008 Golczewski et al.
2008/0051076 A1 2/2008 O'Shaughnessy et al.
2008/0052387 A1 2/2008 Heinz et al.
2008/0056273 A1 3/2008 Pelletier et al.
2008/0059474 A1 3/2008 Lim
2008/0059743 A1 3/2008 Bychkov et al.
2008/0060066 A1 3/2008 Wynn et al.
2008/0062900 A1 3/2008 Rao
2008/0064367 A1 3/2008 Nath et al.
2008/0066149 A1 3/2008 Lim
2008/0066150 A1 3/2008 Lim
2008/0070550 A1 3/2008 Hose
2008/0080457 A1 4/2008 Cole
2008/0081606 A1 4/2008 Cole
2008/0082643 A1 4/2008 Storrie et al.
2008/0083013 A1 4/2008 Soliman et al.
2008/0085707 A1 4/2008 Fadell
2008/0089295 A1 4/2008 Keeler et al.
2008/0095339 A1 4/2008 Elliott et al.
2008/0098062 A1 4/2008 Balia
2008/0109679 A1 5/2008 Wright et al.
2008/0120129 A1 5/2008 Seubert et al.
2008/0120668 A1 5/2008 Yau
2008/0120688 A1 5/2008 Qiu et al.
2008/0125079 A1 5/2008 O'Neil et al.
2008/0127304 A1 5/2008 Ginter et al.
2008/0130534 A1 6/2008 Tomioka
2008/0130656 A1 6/2008 Kim et al.
2008/0132201 A1 6/2008 Karlberg
2008/0132268 A1 6/2008 Choi-Grogan et al.
2008/0134330 A1 6/2008 Kapoor et al.
2008/0139210 A1 6/2008 Gisby et al.
2008/0147454 A1 6/2008 Walker et al.
2008/0160958 A1 7/2008 Abichandani et al.
2008/0162637 A1 7/2008 Adamczyk et al.
2008/0162704 A1 7/2008 Poplett et al.
2008/0164304 A1 7/2008 Narasimhan et al.
2008/0166993 A1 7/2008 Gautier et al.
2008/0167027 A1 7/2008 Gautier et al.
2008/0167033 A1 7/2008 Beckers
2008/0168523 A1 7/2008 Ansari et al.
2008/0177998 A1 7/2008 Apsangi et al.
2008/0183812 A1 7/2008 Paul et al.
2008/0184127 A1 7/2008 Rafey et al.
2008/0189760 A1 8/2008 Rosenberg et al.
2008/0201266 A1 8/2008 Chua et al.
2008/0207167 A1 8/2008 Bugenhagen
2008/0212470 A1 9/2008 Castaneda et al.
2008/0219268 A1 9/2008 Dennison
2008/0221951 A1 9/2008 Stanforth et al.
2008/0222692 A1 9/2008 Andersson et al.
2008/0225748 A1 9/2008 Khemani et al.
2008/0229385 A1 9/2008 Feder et al.
2008/0229388 A1 9/2008 Maes
2008/0235511 A1 9/2008 O'Brien et al.
2008/0240373 A1 10/2008 Wilhelm
2008/0250053 A1 10/2008 Aaltonen et al.
2008/0256593 A1 10/2008 Vinberg et al.
2008/0262798 A1 10/2008 Kim et al.
2008/0263348 A1 10/2008 Zaltsman et al.
2008/0268813 A1 10/2008 Maes
2008/0270212 A1 10/2008 Blight et al.
2008/0282319 A1 11/2008 Fontijn et al.
2008/0293395 A1 11/2008 Mathews et al.
2008/0298230 A1 12/2008 Luft et al.
2008/0305793 A1 12/2008 Gallagher et al.
2008/0311885 A1 12/2008 Dawson et al.
2008/0313315 A1 12/2008 Karaoguz et al.
2008/0313730 A1 12/2008 Iftimie et al.
2008/0316923 A1 12/2008 Fedders et al.
2008/0318547 A1 12/2008 Ballou et al.
2008/0318550 A1 12/2008 DeAtley
2008/0319879 A1 12/2008 Carroll et al.
2009/0005000 A1 1/2009 Baker et al.
2009/0005005 A1 1/2009 Forstall et al.
2009/0006116 A1 1/2009 Baker et al.
2009/0006200 A1 1/2009 Baker et al.
2009/0013157 A1 1/2009 Beaule
2009/0044185 A1 2/2009 Krivopaltsev
2009/0046707 A1 2/2009 Smires et al.
2009/0046723 A1 2/2009 Rahman et al.
2009/0048913 A1 2/2009 Shenfield et al.
2009/0049518 A1 2/2009 Roman et al.
2009/0054030 A1 2/2009 Golds
2009/0067372 A1 3/2009 Shah et al.
2009/0068984 A1 3/2009 Burnett
2009/0070379 A1 3/2009 Rappaport
2009/0077622 A1 3/2009 Baum et al.
2009/0079699 A1 3/2009 Sun
2009/0113514 A1 4/2009 Hu
2009/0125619 A1 5/2009 Antani
2009/0157792 A1 6/2009 Fiatal
2009/0163173 A1 6/2009 Williams
2009/0172077 A1 7/2009 Roxburgh et al.
2009/0180391 A1 7/2009 Petersen et al.
2009/0181662 A1 7/2009 Fleischman et al.
2009/0197585 A1 8/2009 Aaron
2009/0197612 A1 8/2009 Kiiskinen
2009/0219170 A1 9/2009 Clark et al.
2009/0248883 A1 10/2009 Suryanarayana et al.
2009/0254857 A1 10/2009 Romine et al.
2009/0257379 A1 10/2009 Robinson et al.
2009/0271514 A1 10/2009 Thomas et al.
2009/0282127 A1 11/2009 Leblanc et al.
2009/0286507 A1 11/2009 O'Neil et al.
2009/0287921 A1 11/2009 Zhu et al.
2009/0288140 A1 11/2009 Huber et al.
2009/0299857 A1 12/2009 Brubaker
2009/0307746 A1 12/2009 Di et al.
2009/0315735 A1 12/2009 Bhavani et al.
2010/0017506 A1 1/2010 Fadell
2010/0020822 A1 1/2010 Zerillo et al.
2010/0027469 A1 2/2010 Gurajala et al.
2010/0027559 A1 2/2010 Lin et al.
2010/0030890 A1 2/2010 Dutta et al.
2010/0041364 A1 2/2010 Lott et al.
2010/0042675 A1 2/2010 Fujii
2010/0043068 A1 2/2010 Varadhan et al.
2010/0071053 A1 3/2010 Ansari et al.
2010/0075666 A1 3/2010 Garner
2010/0080202 A1 4/2010 Hanson
2010/0082431 A1 4/2010 Ramer et al.
2010/0103820 A1 4/2010 Fuller et al.
2010/0131584 A1 5/2010 Johnson
2010/0144310 A1 6/2010 Bedingfield, Sr. et al.
2010/0151866 A1 6/2010 Karpov et al.
2010/0153781 A1 6/2010 Hanna
2010/0167696 A1 7/2010 Smith et al.
2010/0188975 A1 7/2010 Raleigh
2010/0188990 A1 7/2010 Raleigh
2010/0188992 A1 7/2010 Raleigh
2010/0188994 A1 7/2010 Raleigh
2010/0191576 A1 7/2010 Raleigh
2010/0191612 A1 7/2010 Raleigh
2010/0191846 A1 7/2010 Raleigh
2010/0192170 A1 7/2010 Raleigh
2010/0192212 A1 7/2010 Raleigh
2010/0195503 A1 8/2010 Raleigh
2010/0197268 A1 8/2010 Raleigh
2010/0198698 A1 8/2010 Raleigh et al.
2010/0198939 A1 8/2010 Raleigh
2010/0235329 A1 9/2010 Koren et al.
2010/0241544 A1 9/2010 Benson et al.
2010/0248719 A1 9/2010 Scholaert
2010/0284327 A1 11/2010 Miklos
2010/0287599 A1 11/2010 He et al.
2010/0311402 A1 12/2010 Srinivasan et al.

(56) **References Cited**

U.S. PATENT DOCUMENTS

2010/0325420	A1	12/2010	Kanekar
2011/0013569	A1	1/2011	Scherzer et al.
2011/0019574	A1	1/2011	Malomsoky et al.
2011/0081881	A1	4/2011	Baker et al.
2011/0082790	A1	4/2011	Baker et al.
2011/0110309	A1	5/2011	Bennett
2011/0126141	A1	5/2011	King et al.
2011/0145920	A1	6/2011	Mahaffey et al.
2011/0159818	A1	6/2011	Scherzer et al.
2011/0173678	A1	7/2011	Kaippallimalil et al.
2011/0264923	A1	10/2011	Kocher et al.
2011/0277019	A1	11/2011	Pritchard, Jr.
2012/0020296	A1	1/2012	Scherzer et al.
2012/0196644	A1	8/2012	Scherzer et al.
2012/0238287	A1	9/2012	Scherzer
2013/0029653	A1	1/2013	Baker et al.
2013/0058274	A1	3/2013	Scherzer et al.
2013/0065555	A1	3/2013	Baker et al.
2013/0084835	A1	4/2013	Scherzer et al.
2013/0144789	A1	6/2013	Aaltonen et al.
2013/0326356	A9	12/2013	Zheng et al.

FOREIGN PATENT DOCUMENTS

CN	1508734	A	6/2004
CN	1538730	A	10/2004
CN	1567818	A	1/2005
CN	101035308	A	3/2006
CN	1801829	A	7/2006
CN	1802839	A	7/2006
CN	1889777	A	7/2006
CN	101155343	A	9/2006
CN	1867024	A	11/2006
CN	1878160	A	12/2006
CN	1937511	A	3/2007
CN	101123553	A	9/2007
CN	101080055	A	11/2007
CN	101115248	A	1/2008
CN	101127988	A	2/2008
CN	101183958	A	5/2008
CN	101335666	A	12/2008
CN	101341764	A	1/2009
CN	101815275	A	8/2010
EP	1463238		9/2004
EP	1503548	A1	2/2005
EP	1739518		1/2007
EP	1772988		4/2007
EP	1850575	A1	10/2007
EP	1978772		10/2008
JP	3148713	B2	3/2001
JP	2007318354	A	12/2007
JP	2008301121	A	12/2008
JP	2009111919		5/2009
JP	2009212707	A	9/2009
JP	2009218773		9/2009
JP	2009232107	A	10/2009
WO	9858505		12/1998
WO	9927723	A1	6/1999
WO	9965185		12/1999
WO	03014891		2/2003
WO	03058880		7/2003
WO	2004028070		4/2004
WO	2004064306		7/2004
WO	2004077797		9/2004
WO	2004095753		11/2004
WO	2005008995		1/2005
WO	2006004467		1/2006
WO	2006012610	A2	2/2006
WO	2006050758		5/2006
WO	2006073837		7/2006
WO	2006077481		7/2006
WO	2006093961	A1	9/2006
WO	2006120558	A1	11/2006
WO	2006130960		12/2006
WO	2007001833		1/2007
WO	2007014630		2/2007
WO	2007018363		2/2007
WO	2007053848		5/2007
WO	2007068288		6/2007
WO	2007069245		6/2007
WO	2007097786	A	8/2007
WO	2007107701		9/2007
WO	2007124279		11/2007
WO	2007126352		11/2007
WO	2007133844	A	11/2007
WO	2008017837		2/2008
WO	2008051379		5/2008
WO	2008066419		6/2008
WO	2008080139		7/2008
WO	2008080430		7/2008
WO	2008099802		8/2008
WO	2010088413		8/2010

OTHER PUBLICATIONS

Oct. 29, 2014 Office Action in Australian Patent Application No. 2010208294.

"End to End QoS Solution for Real-time Multimedia Application;" Computer Engineering and Applications, 2007, 43 (4): 155-159, by Tan Zu-guo, Wang Wen-juan; Information and Science School, Zhanjian Normal College, Zhan jiang, Guangdong 524048, China.

"ASA/PIX: Allow Split Tunneling for VPN Clients on the ASA Configuration Example," Document ID 70917, Jan. 10, 2008.

Ahmed et al., "A Context-Aware Vertical Handover Decision Algorithm for Multimode Mobile Terminals and Its Performance," BenQ Mobile, Munich Germany; University of Klagenfurt, Klagenfurt, Austria; 2006.

Dixon et al., Triple Play Digital Services: Comcast and Verizon (Digital Phone, Television, and Internet), Aug. 2007.

Kassar et al., "An overview of vertical handover decision strategies in heterogeneous wireless networks," ScienceDirect, University Pierre & Marie Curie, Paris, France, Jun. 5, 2007.

Sadeh et al., "Understanding and Capturing People's Privacy Policies in a Mobile Social Networking Application," ISR School of Computer Science, Carnegie Mellon University, 2007.

Schiller et al., "Location-Based Services," The Morgan Kaufmann Series in Data Management Systems, 2004.

Office Action in Chinese Patent Application No. CN 201080010511.1 dated Mar. 6, 2015.

Jun. 11, 2014 Second Office Action in Chinese Application No. 201080010511.1.

Accuris Networks, "The Business Value of Mobile Data Offload—a White Paper", 2010.

Anton, B. et al., "Best Current Practices for Wireless Internet Service Provider (WISP) Roaming"; Release Date Feb. 2003, Version 1.0; Wi-Fi Alliance—Wireless ISP Roaming (WISPr).

Ruckus Wireless—White Paper; "Smarter VVi-Fi for Mobile Operator Infrastructures" 2010.

Wireless Broadband Alliance, "WISPr 2.0, 08 Apr. 2010"; Doc. Ref. No. WBA/RM/WISPr, Version 01.00.

"Ads and movies on the run," the Gold Coast Bulletin, Southport, Qld, Jan. 29, 2008.

"Jentro Technologies launches Zenlet platform to accelerate location-based content delivery to mobile devices," The Mobile Internet, Boston, MA, Feb. 2008.

Jing et al., "Client-Server Computing in Mobile Environments," GTE Labs. Inc., Purdue University, ACM Computing Surveys, vol. 31, No. 2, Jun. 1999.

Kim, "Free wireless a high-wire act; MetroFi needs to draw enough ads to make service add profits," San Francisco Chronicle, Aug. 21, 2006.

Koutsopoulou et al., "Charging, Accounting and Billing Management Schemes in Mobile Telecommunication Networks and the Internet," IEEE Communications Surveys & Tutorials, First Quarter 2004, vol. 6, No. 1.

Loopt User Guide, metroPCS, Jul. 17, 2008.

Nuzman et al., "A compund model for TCP connection arrivals for LAN and WAN applications," Oct. 22, 2002.

(56) **References Cited**

OTHER PUBLICATIONS

Richtel, "Cellphone consumerism; If even a debit card is too slow, now you have a new way to act on impulse: [National Edition]," National Post, Canada, Oct. 2, 2007.
Rivadeneyra et al., "A communication architecture to access data services through GSM," San Sebastian, Spain, 1998.
Sabat, "The evolving mobile wireless value chain and market structure," Nov. 2002.
Sun et al., "Towards Connectivity Management Adaptability: Context Awareness in Policy Representation and End-to-end Evaluation Algorithm," Dept. of Electrical and Information Engineering, Univ. of Oulu, Finland, 2004.
"The Construction of Intelligent Residential District in Use of Cable Television Network," Shandong Science, vol. 13, No. 2, Jun. 2000.
VerizonWireless.com news, "Verizon Wireless Adds to Portfolio of Cosumer-Friendly Tools With Introduction of Usage Controls, Usage Controls and Chaperone 2.0 Offer Parents Full Family Security Solution," Aug. 18, 2008.
Aug. 14, 2013 Office Action in Chinese Patent Application No. 201080010511.1.
3rd Generation Partnership Project, "Technical Specification Group Services and System Aspects; General Packet Radio Service (GPRS) Enhancements for Evolved Universal Terrestrial Radio Access Network (E-UTRAN) Access," Release 8, Document No. 3GPP TS 23.401, V8.4.0, Dec. 2008.
3rd Generation Partnership Project, "Technical Specification Group Services and System Aspects; Policy and Charging Control Architecture," Release 8, Document No. 3GPP TS 23.203, V8.4.0, Dec. 2008.
Alonistioti et al., "Intelligent Architectures Enabling Flexible Service Provision and Adaptability," 2002.
Amazon Technologies, Inc., "Kindle™ User's Guide," 3rd Edition, Copyright 2004-2009.
Chandrasekhar et al., "Femtocell Networks: A Survey," Jun. 28, 2008.
Chaouchi et al., "Policy Based Networking in the Integration Effort of 4G Networks and Services," 2004 IEEE.
Cisco Systems, Inc., "Cisco Mobile Exchange (CMX) Solution Guide: Chapter 2—Overview of GMS, GPRS, and UMTS," Nov. 4, 2008.
Dikaiakos et al., "A Distributed Middleware Infrastructure for Personalized Services," Nov. 24, 2003.
European Commission, "Data Roaming Tariffs—Transparency Measures," [online] retrieved from http://web.archive.org/web/20081220232754/http://ec.europa.eu/information_society/activities/roaming/data/measures/index_en.htm, Dec. 20, 2008 [retrieved May 16, 2012].
Farooq et al., "An IEEE 802.16 WiMax Module for the NS-3 Simulator," Mar. 2-6, 2009.
Han et al., "Information Collection Services for Qos-Aware Mobile Applications," 2005.
Hartmann et al., "Agent-Based Banking Transactions & Information Retrieval—What About Performance Issues?" 1999.
Hewlett-Packard Development Company, LP, "IP Multimedia Services Charging," white paper, Jan. 2006.
Hossain et al., "Gain-Based Selection of Ambient Media Services in Pervasive Environments," Mobile Networks and Applications. Oct. 3, 2008.
Knight et al., "Layer 2 and 3 Virtual Private Networks: Taxonomy, Technology, and Standarization Efforts," IEEE Communications Magazine, Jun. 2004.
Koutsopoulou et al., "Middleware Platform for the Support of Charging Reconfiguration Actions," 2005.
Kyriakakos et al., "Ubiquitous Service Provision in Next Generation Mobile Networks," Proceedings of the 13th IST Mobile and Wireless Communications Summit, Lyon, France, Jun. 2004.
Li, Yu, "Dedicated E-Reading Device: The State of the Art and The Challenges," Scroll, vol. 1, No. 1, 2008.
Nilsson et al., "A Novel MAC Scheme for Solving the QoS Parameter Adjustment Problem in IEEE802.11e EDCA," Feb. 2006.
Oppliger, Rolf, "Internet Security: Firewalls and Bey," Communications of the ACM, May 1997, vol. 40. No. 5.
Rao et al., "Evolution of Mobile Location-Based Services," Communication of the ACM, Dec. 2003.
Steglich, Stephan, "I-Centric User Interaction," Nov. 21, 2003.
Van Eijk, et al., "GigaMobile, Agent Technology for Designing Personalized Mobile Service Brokerage," Jul. 1, 2002.
Zhu et al., "A Survey of Quality of Service in IEEE 802.11 Networks," IEEE Wireless Communications, Aug. 2004.

* cited by examiner

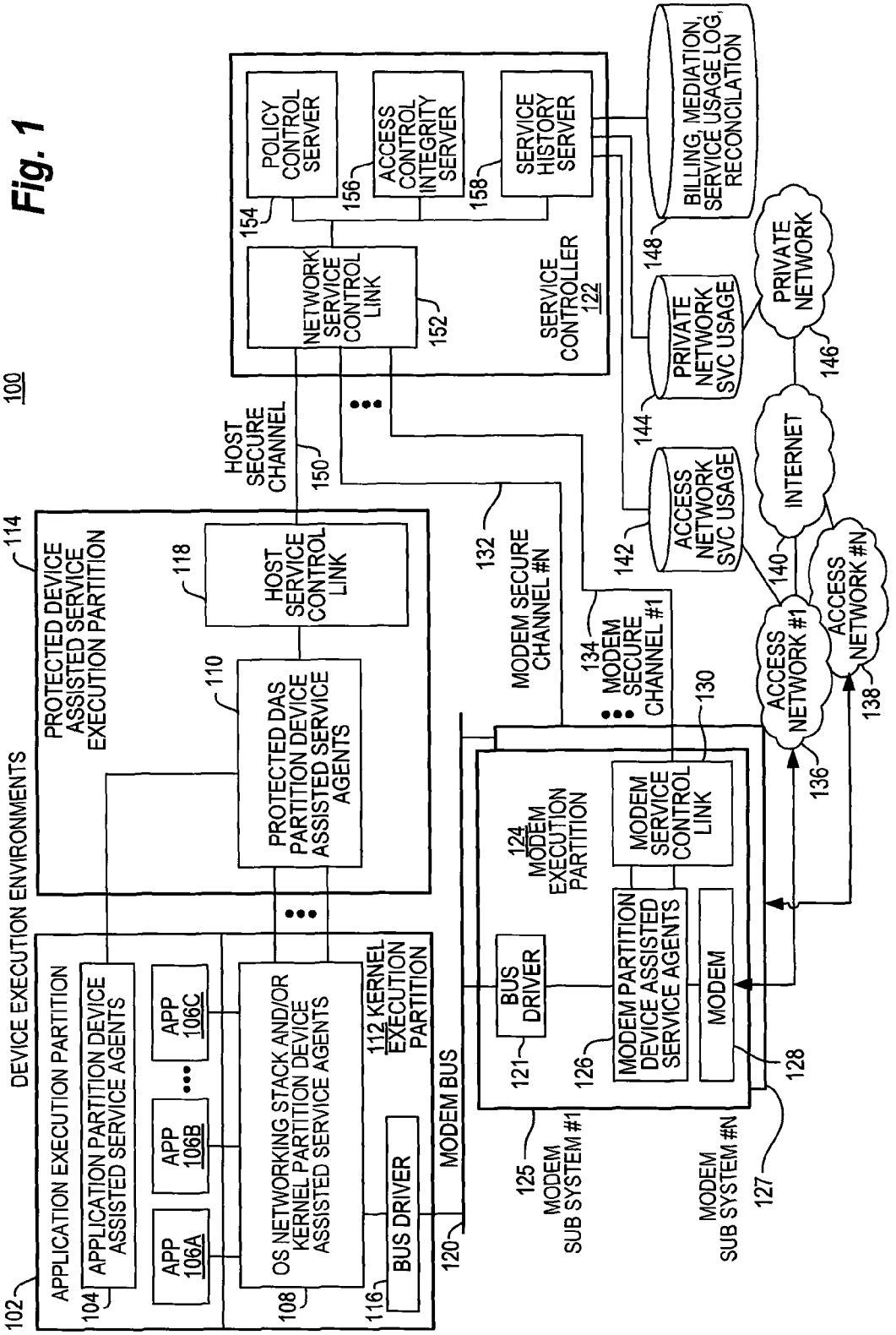
Fig. 1
100
DEVICE EXECUTION ENVIRONMENTS
114
PROTECTED DEVICE ASSISTED SERVICE EXECUTION PARTITION
118
HOST SERVICE CONTROL LINK
110
PROTECTED DAS PARTITION DEVICE ASSISTED SERVICE AGENTS
HOST SECURE CHANNEL
150
132
MODEM SECURE CHANNEL #N
134
MODEM SECURE CHANNEL #1
POLICY CONTROL SERVER
154
ACCESS CONTROL INTEGRITY SERVER
156
SERVICE HISTORY SERVER
158
NETWORK SERVICE CONTROL LINK
152
SERVICE CONTROLLER 122
BILLING, MEDIATION, SERVICE USAGE LOG, RECONCILATION
148
PRIVATE NETWORK SVC USAGE
144
PRIVATE NETWORK
146
ACCESS NETWORK SVC USAGE
142
INTERNET
140
ACCESS NETWORK #1
136
ACCESS NETWORK #N
138
APPLICATION EXECUTION PARTITION
102
APPLICATION PARTITION DEVICE ASSISTED SERVICE AGENTS
104
APP 106A
APP 106B
APP 106C
OS NETWORKING STACK AND/OR KERNEL PARTITION DEVICE ASSISTED SERVICE AGENTS
108
112 KERNEL EXECUTION PARTITION
BUS DRIVER
116
MODEM BUS
120
124 MODEM EXECUTION PARTITION
MODEM SERVICE CONTROL LINK
130
BUS DRIVER
121
MODEM PARTITION DEVICE ASSISTED SERVICE AGENTS
126
MODEM
128
125 MODEM SUB SYSTEM #1
MODEM SUB SYSTEM #N
127

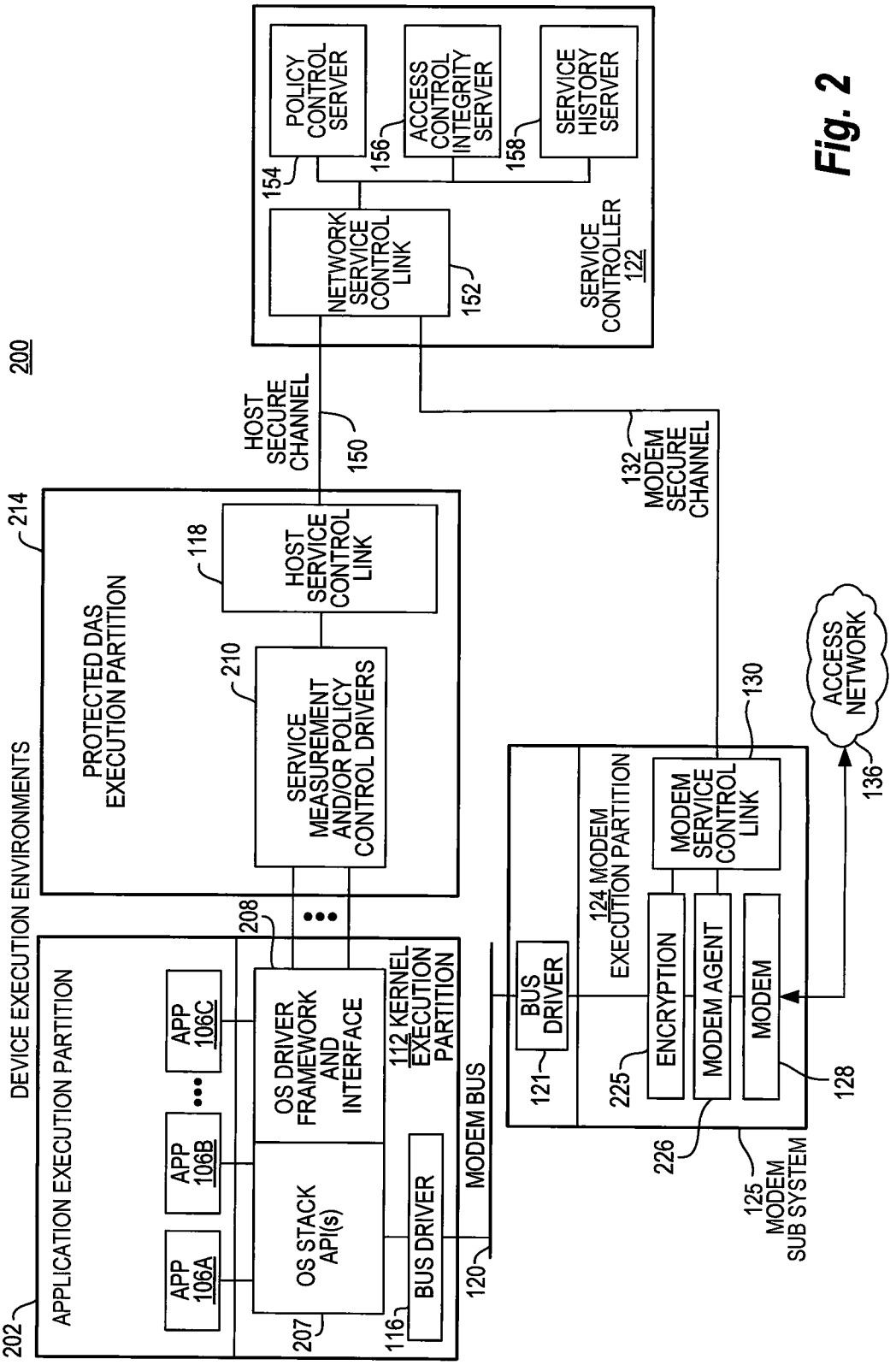
200
DEVICE EXECUTION ENVIRONMENTS
202
APPLICATION EXECUTION PARTITION
APP 106A
APP 106B
APP 106C
207
OS STACK API(s)
208
OS DRIVER FRAMEWORK AND INTERFACE
112 KERNEL EXECUTION PARTITION
116
BUS DRIVER
120
MODEM BUS
214
PROTECTED DAS EXECUTION PARTITION
210
SERVICE MEASUREMENT AND/OR POLICY CONTROL DRIVERS
118
HOST SERVICE CONTROL LINK
HOST SECURE CHANNEL
150
NETWORK SERVICE CONTROL LINK
152
154
POLICY CONTROL SERVER
156
ACCESS CONTROL INTEGRITY SERVER
158
SERVICE HISTORY SERVER
SERVICE CONTROLLER 122
132
MODEM SECURE CHANNEL
121
BUS DRIVER
124 MODEM EXECUTION PARTITION
225
ENCRYPTION
226
MODEM AGENT
128
MODEM
130
MODEM SERVICE CONTROL LINK
125
MODEM SUB SYSTEM
136
ACCESS NETWORK

Fig. 2

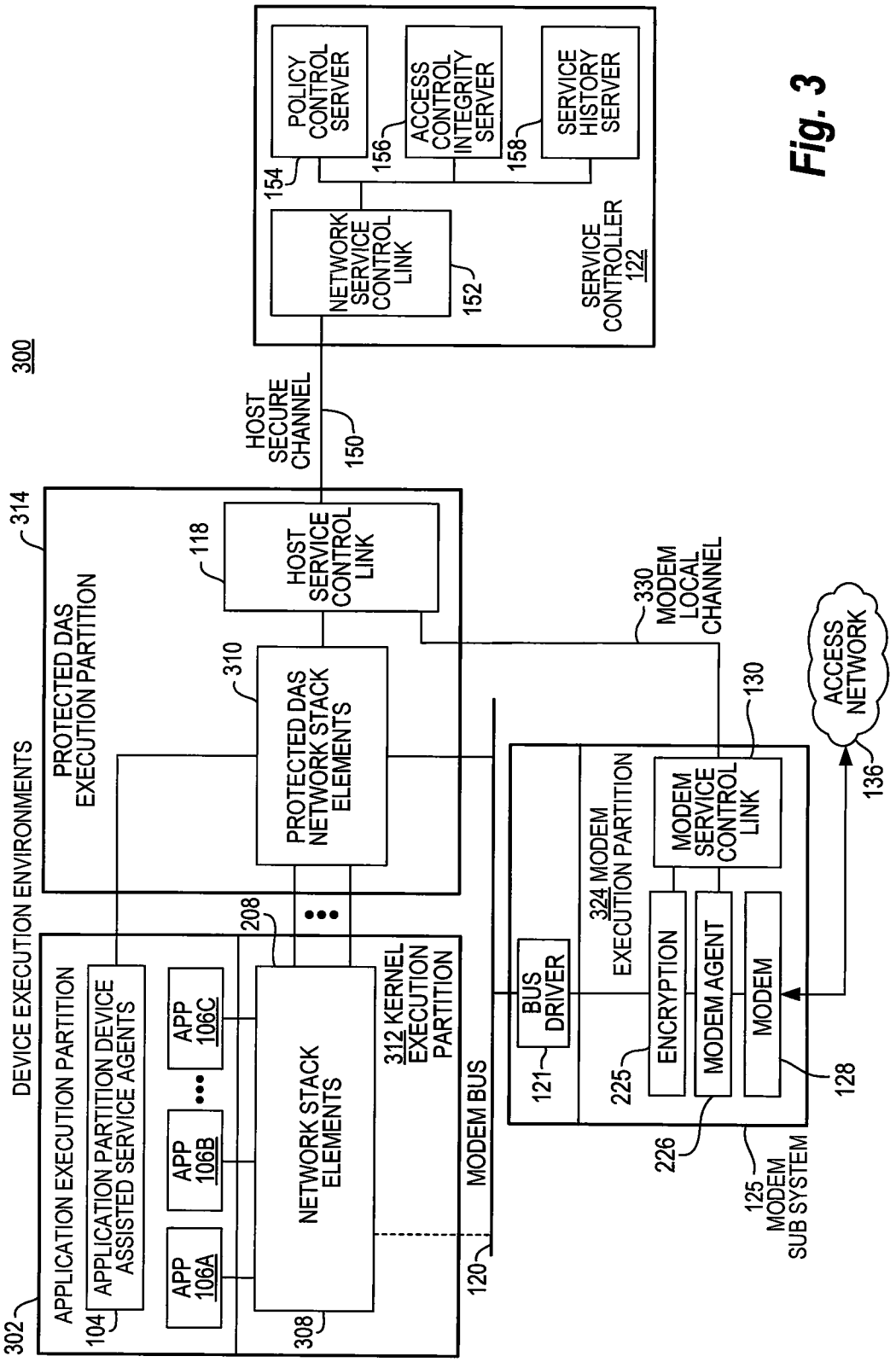
300
DEVICE EXECUTION ENVIRONMENTS
314
PROTECTED DAS EXECUTION PARTITION
118
HOST SERVICE CONTROL LINK
310
PROTECTED DAS NETWORK STACK ELEMENTS
HOST SECURE CHANNEL
150
POLICY CONTROL SERVER
154
ACCESS CONTROL INTEGRITY SERVER
156
SERVICE HISTORY SERVER
158
NETWORK SERVICE CONTROL LINK
152
SERVICE CONTROLLER 122
330 MODEM LOCAL CHANNEL
130
MODEM SERVICE CONTROL LINK
ACCESS NETWORK
136
324 MODEM EXECUTION PARTITION
BUS DRIVER
121
ENCRYPTION
225
MODEM AGENT
226
MODEM
128
125 MODEM SUB SYSTEM
MODEM BUS
120
312 KERNEL EXECUTION PARTITION
208
NETWORK STACK ELEMENTS
308
APPLICATION EXECUTION PARTITION
302
APPLICATION PARTITION DEVICE ASSISTED SERVICE AGENTS
104
APP 106A
APP 106B
APP 106C

Fig. 3

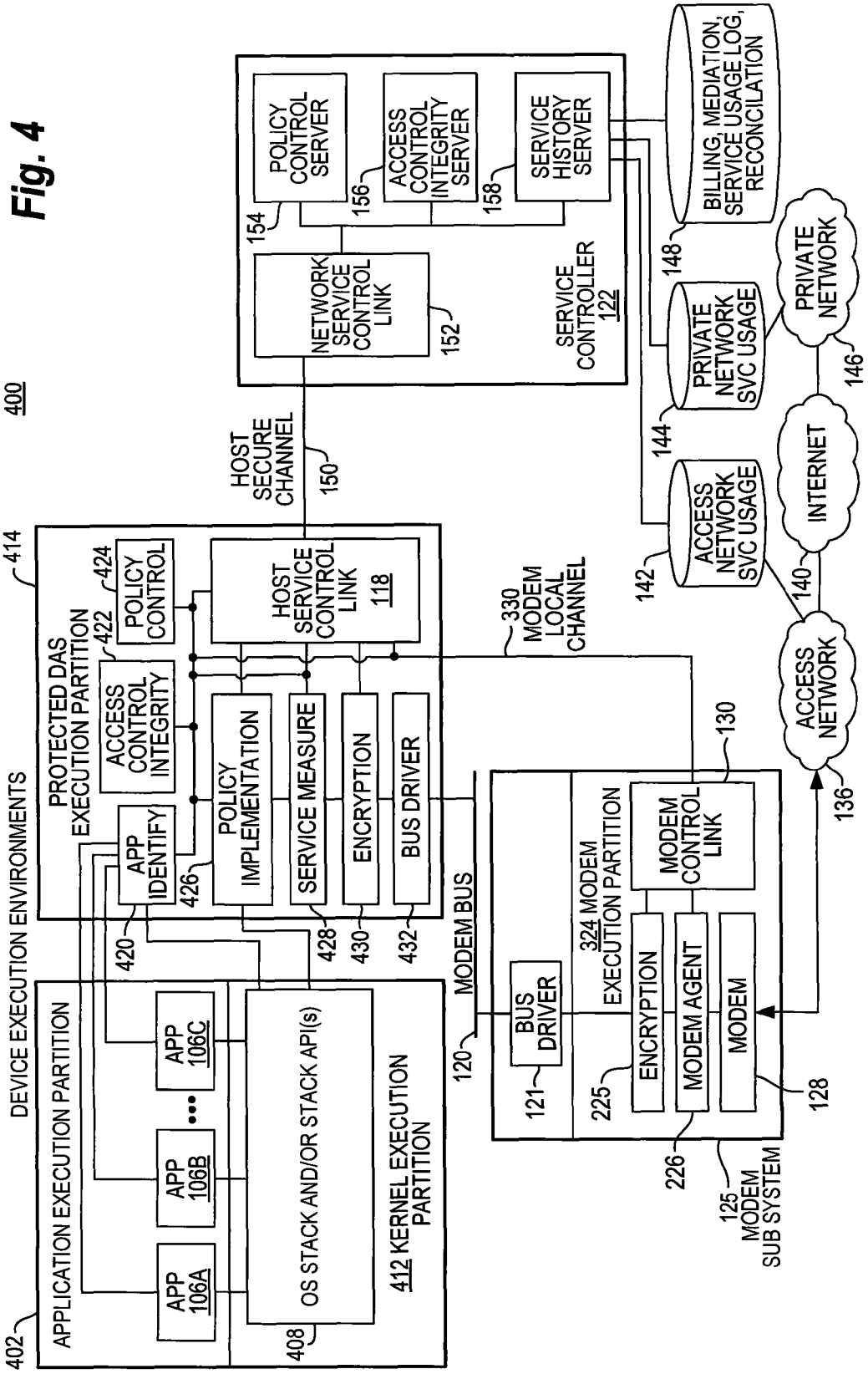
400
Fig. 4
DEVICE EXECUTION ENVIRONMENTS
414
PROTECTED DAS EXECUTION PARTITION
422
ACCESS CONTROL INTEGRITY
424
POLICY CONTROL
APP IDENTIFY
426
420
POLICY IMPLEMENTATION
SERVICE MEASURE
428
ENCRYPTION
430
BUS DRIVER
432
HOST SERVICE CONTROL LINK 118
HOST SECURE CHANNEL
150
330 MODEM LOCAL CHANNEL
MODEM BUS
120
APPLICATION EXECUTION PARTITION
402
APP 106A
APP 106B
APP 106C
OS STACK AND/OR STACK API(s)
408
412 KERNEL EXECUTION PARTITION
BUS DRIVER
121
324 MODEM EXECUTION PARTITION
225
ENCRYPTION
MODEM AGENT
226
MODEM
128
MODEM CONTROL LINK
130
125 MODEM SUB SYSTEM
ACCESS NETWORK
136
INTERNET
140
PRIVATE NETWORK
146
ACCESS NETWORK SVC USAGE
142
PRIVATE NETWORK SVC USAGE
144
BILLING, MEDIATION, SERVICE USAGE LOG, RECONCILATION
148
SERVICE CONTROLLER 122
NETWORK SERVICE CONTROL LINK
152
POLICY CONTROL SERVER
154
ACCESS CONTROL INTEGRITY SERVER
156
SERVICE HISTORY SERVER
158

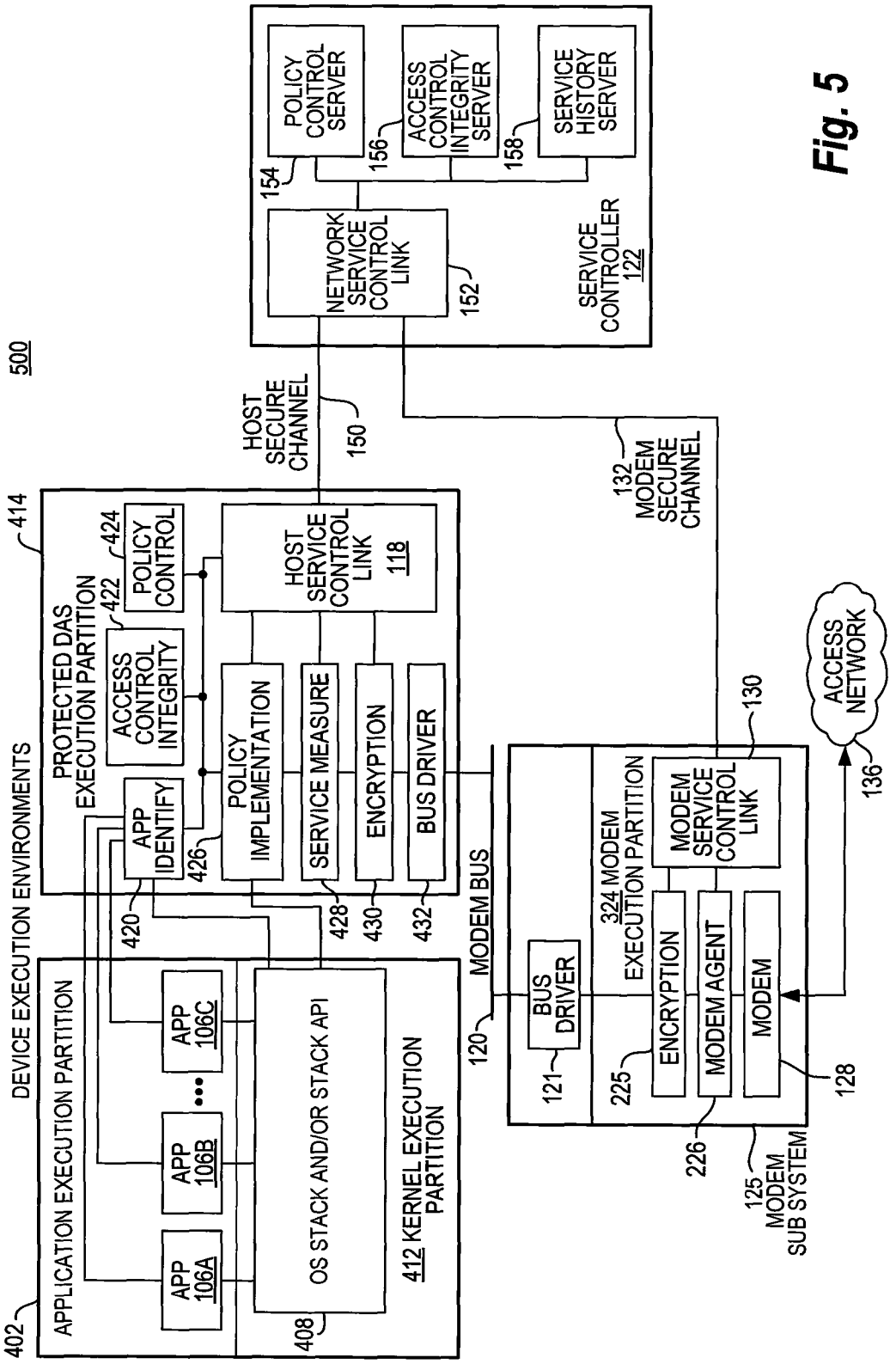
500
SERVICE CONTROLLER 122
POLICY CONTROL SERVER
154
ACCESS CONTROL INTEGRITY SERVER
156
SERVICE HISTORY SERVER
158
NETWORK SERVICE CONTROL LINK
152
HOST SECURE CHANNEL
150
132 MODEM SECURE CHANNEL
414
DEVICE EXECUTION ENVIRONMENTS
PROTECTED DAS EXECUTION PARTITION
422
424
POLICY CONTROL
ACCESS CONTROL INTEGRITY
HOST SERVICE CONTROL LINK 118
APP IDENTIFY
426
POLICY IMPLEMENTATION
SERVICE MEASURE
ENCRYPTION
BUS DRIVER
420
428
430
432
402
APPLICATION EXECUTION PARTITION
APP 106A
APP 106B
APP 106C
OS STACK AND/OR STACK API
408
412 KERNEL EXECUTION PARTITION
MODEM BUS
120
BUS DRIVER
121
324 MODEM EXECUTION PARTITION
MODEM SERVICE CONTROL LINK
130
ENCRYPTION
225
MODEM AGENT
226
MODEM
128
125 MODEM SUB SYSTEM
ACCESS NETWORK
136

Fig. 5

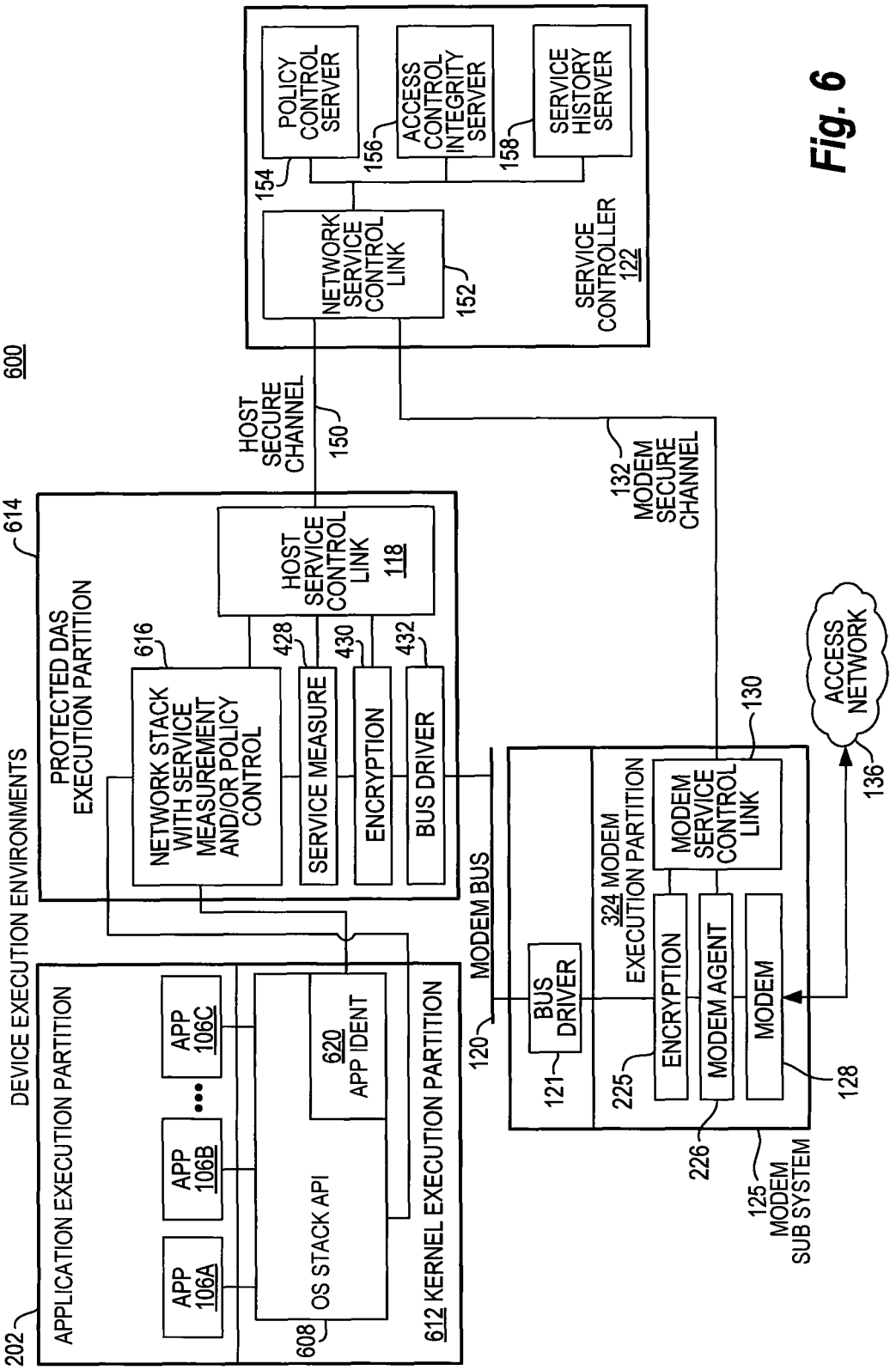
600
DEVICE EXECUTION ENVIRONMENTS
614
PROTECTED DAS EXECUTION PARTITION
616
NETWORK STACK WITH SERVICE MEASUREMENT AND/OR POLICY CONTROL
HOST SERVICE CONTROL LINK 118
428
SERVICE MEASURE
430
ENCRYPTION
432
BUS DRIVER
HOST SECURE CHANNEL
150
NETWORK SERVICE CONTROL LINK
152
POLICY CONTROL SERVER
154
ACCESS CONTROL INTEGRITY SERVER
156
SERVICE HISTORY SERVER
158
SERVICE CONTROLLER 122
132
MODEM SECURE CHANNEL
MODEM BUS
120
202
APPLICATION EXECUTION PARTITION
APP 106A
APP 106B
APP 106C
OS STACK API
608
620 APP IDENT
612 KERNEL EXECUTION PARTITION
121
BUS DRIVER
324 MODEM EXECUTION PARTITION
MODEM SERVICE CONTROL LINK
130
225
ENCRYPTION
MODEM AGENT
MODEM
128
226
125 MODEM SUB SYSTEM
ACCESS NETWORK
136

Fig. 6

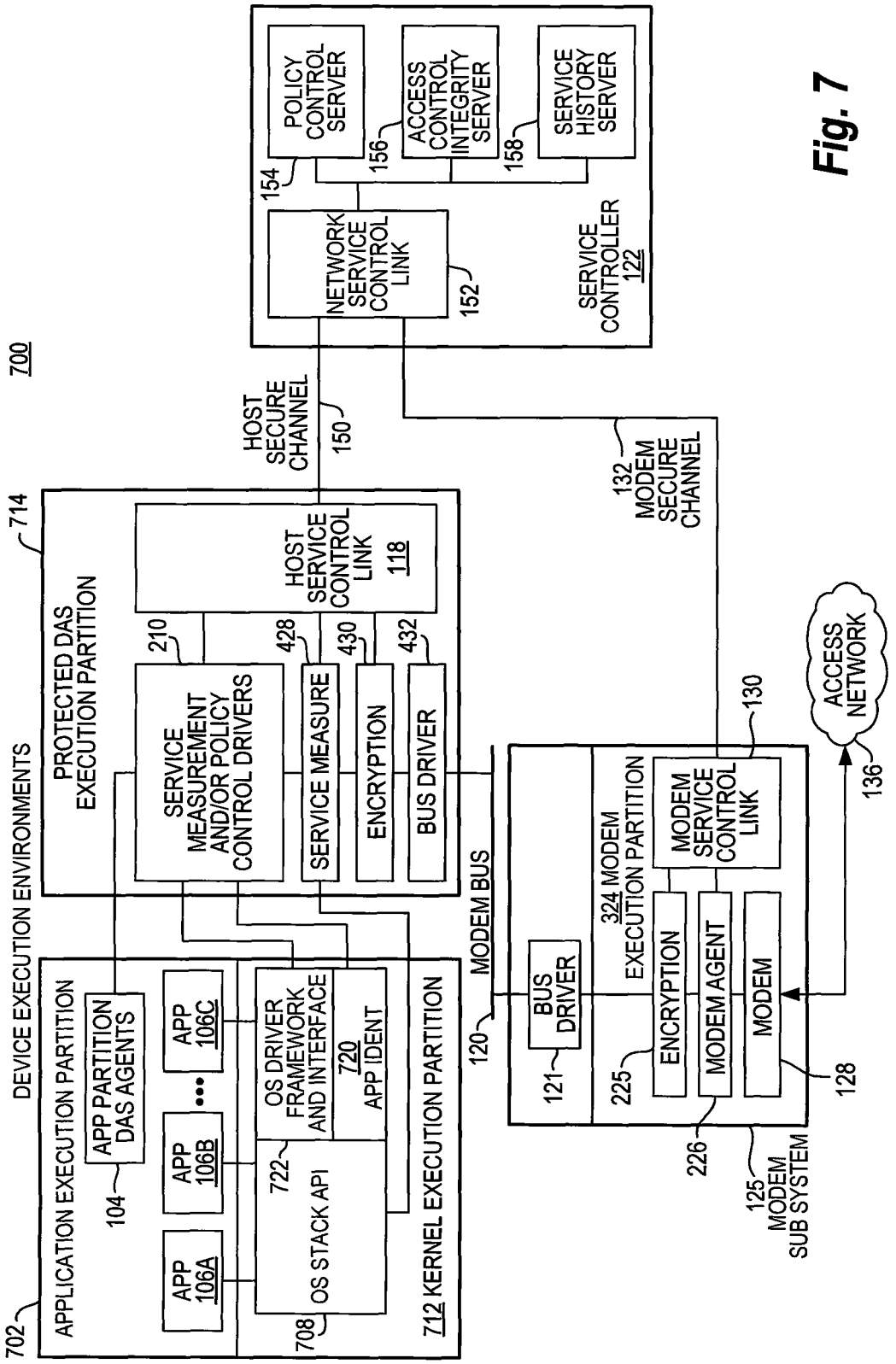
700
DEVICE EXECUTION ENVIRONMENTS
714
PROTECTED DAS EXECUTION PARTITION
HOST SERVICE CONTROL LINK
118
210
SERVICE MEASUREMENT AND/OR POLICY CONTROL DRIVERS
428
SERVICE MEASURE
430
ENCRYPTION
432
BUS DRIVER
HOST SECURE CHANNEL
150
NETWORK SERVICE CONTROL LINK
152
POLICY CONTROL SERVER
154
ACCESS CONTROL INTEGRITY SERVER
156
SERVICE HISTORY SERVER
158
SERVICE CONTROLLER
122
132
MODEM SECURE CHANNEL
702
APPLICATION EXECUTION PARTITION
APP PARTITION DAS AGENTS
104
APP 106A
APP 106B
APP 106C
OS DRIVER FRAMEWORK AND INTERFACE
720
APP IDENT
722
OS STACK API
708
712 KERNEL EXECUTION PARTITION
MODEM BUS
120
BUS DRIVER
121
324 MODEM EXECUTION PARTITION
MODEM SERVICE CONTROL LINK
130
ENCRYPTION
225
MODEM AGENT
226
MODEM
128
125
MODEM SUB SYSTEM
ACCESS NETWORK
136

Fig. 7

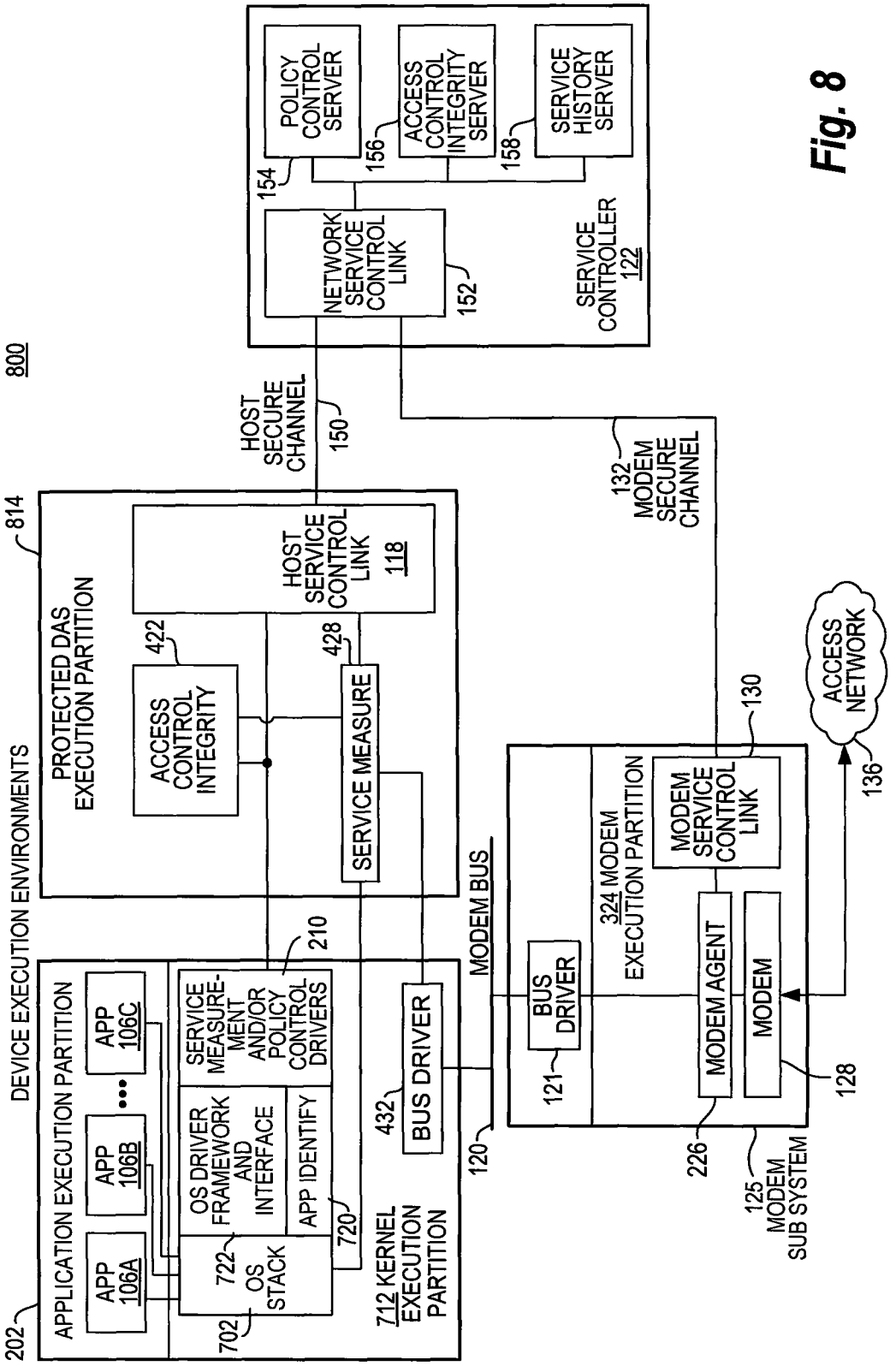
800
POLICY CONTROL SERVER
154
ACCESS CONTROL INTEGRITY SERVER
156
SERVICE HISTORY SERVER
158
NETWORK SERVICE CONTROL LINK
152
SERVICE CONTROLLER 122
HOST SECURE CHANNEL
150
132 MODEM SECURE CHANNEL
814
PROTECTED DAS EXECUTION PARTITION
HOST SERVICE CONTROL LINK 118
422
ACCESS CONTROL INTEGRITY
428
SERVICE MEASURE
DEVICE EXECUTION ENVIRONMENTS
APPLICATION EXECUTION PARTITION
APP 106A
APP 106B
APP 106C
SERVICE MEASURE-MENT AND/OR POLICY CONTROL DRIVERS
210
OS DRIVER FRAMEWORK AND INTERFACE
APP IDENTIFY
720
722 OS STACK
702
202
712 KERNEL EXECUTION PARTITION
432
BUS DRIVER
MODEM BUS
120
BUS DRIVER
121
324 MODEM EXECUTION PARTITION
MODEM SERVICE CONTROL LINK
130
MODEM AGENT
MODEM
128
226
125 MODEM SUB SYSTEM
ACCESS NETWORK
136

Fig. 8

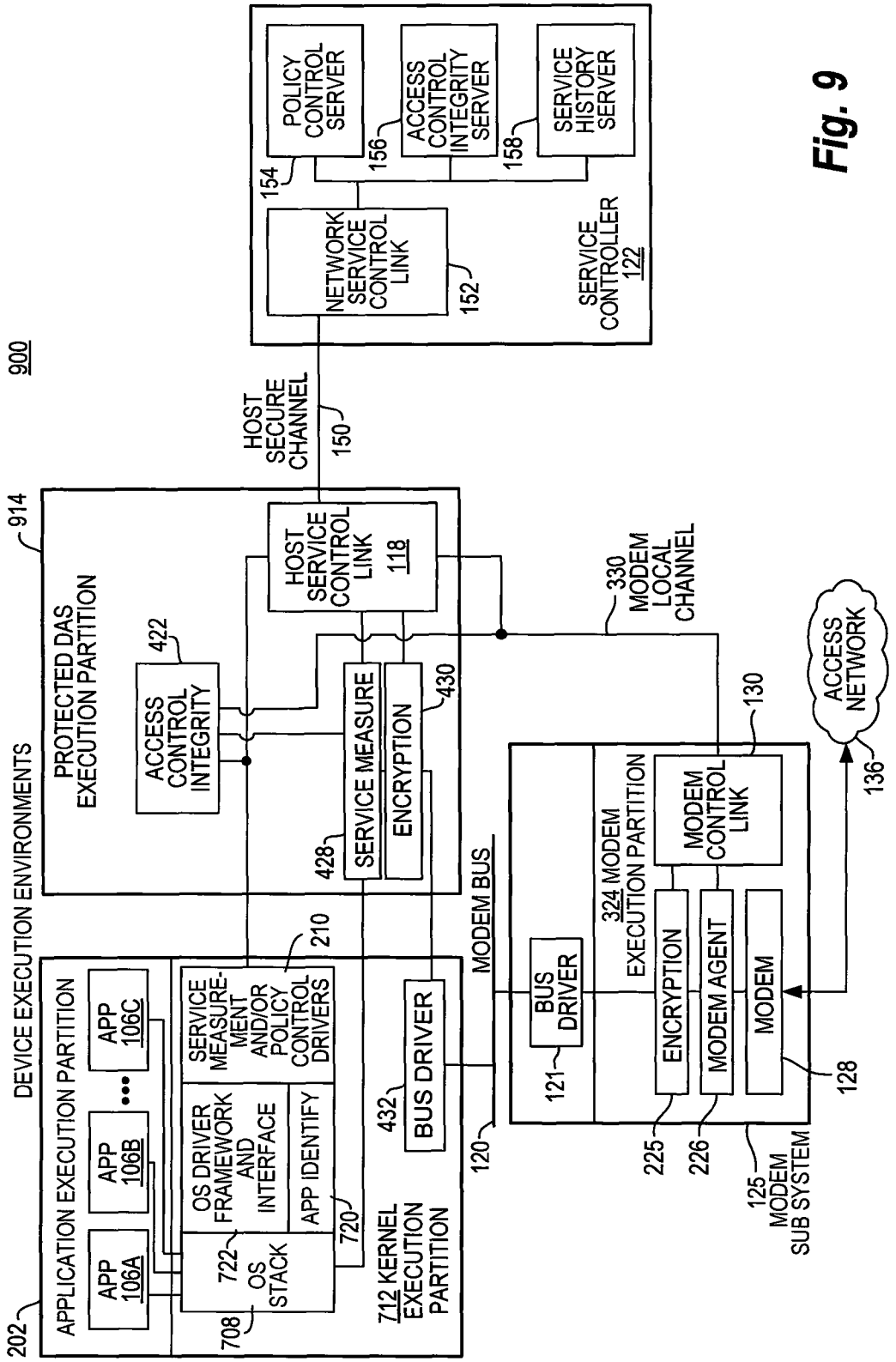
900
SERVICE CONTROLLER 122
POLICY CONTROL SERVER
154
ACCESS CONTROL INTEGRITY SERVER
156
SERVICE HISTORY SERVER
158
NETWORK SERVICE CONTROL LINK
152
HOST SECURE CHANNEL
150
914
PROTECTED DAS EXECUTION PARTITION
HOST SERVICE CONTROL LINK 118
422
ACCESS CONTROL INTEGRITY
SERVICE MEASURE
428
ENCRYPTION
430
330 MODEM LOCAL CHANNEL
ACCESS NETWORK
136
130
DEVICE EXECUTION ENVIRONMENTS
APPLICATION EXECUTION PARTITION
APP 106A
APP 106B
APP 106C
SERVICE MEASURE-MENT AND/OR POLICY CONTROL DRIVERS
210
OS DRIVER FRAMEWORK AND INTERFACE
APP IDENTIFY
720
722 OS STACK
708
202
712 KERNEL EXECUTION PARTITION
432
BUS DRIVER
MODEM BUS
120
BUS DRIVER
121
324 MODEM EXECUTION PARTITION
MODEM CONTROL LINK
ENCRYPTION
MODEM AGENT
MODEM
128
225
226
125 MODEM SUB SYSTEM

Fig. 9

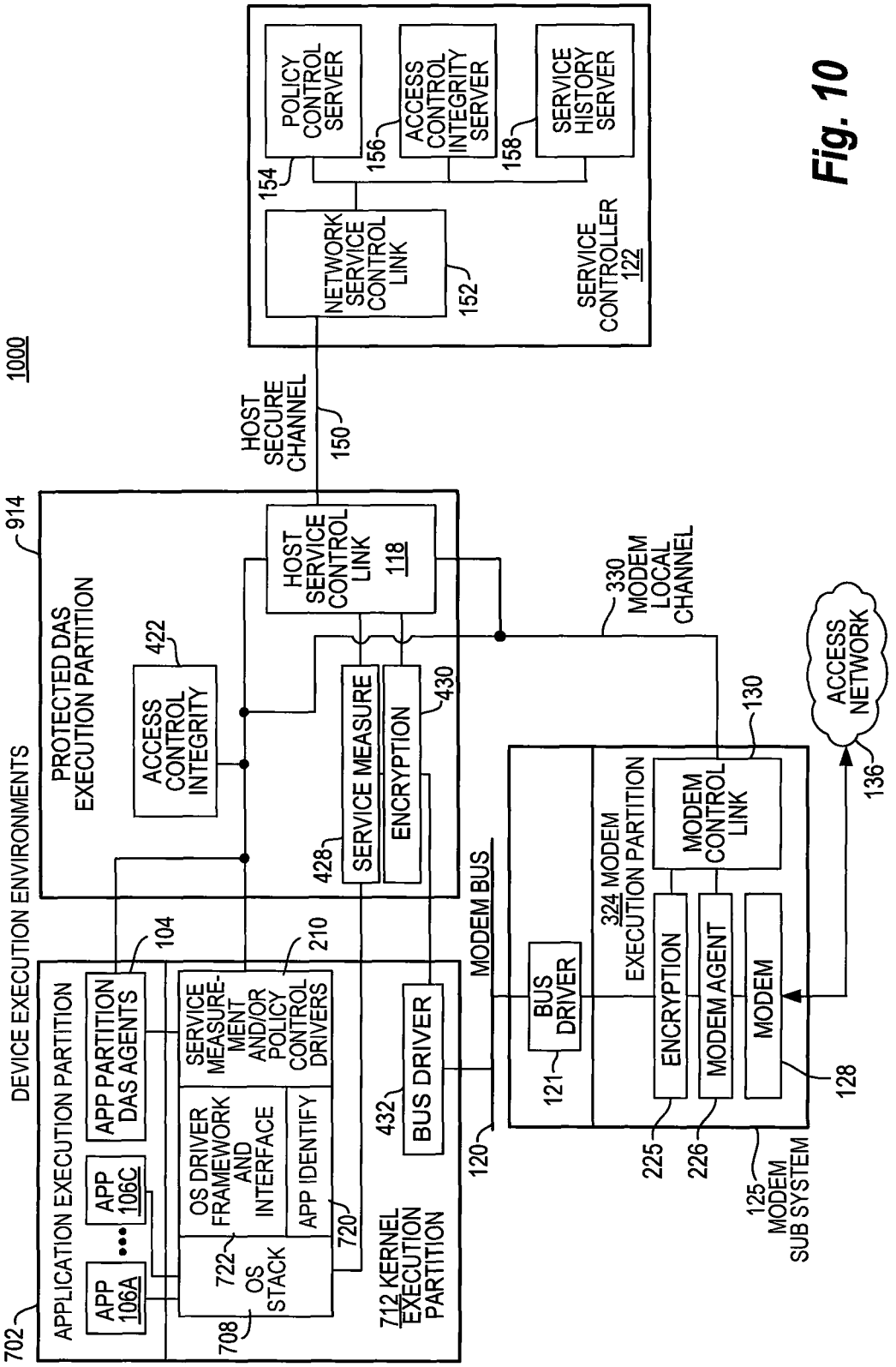
1000
DEVICE EXECUTION ENVIRONMENTS
914
PROTECTED DAS EXECUTION PARTITION
ACCESS CONTROL INTEGRITY
422
HOST SERVICE CONTROL LINK
118
SERVICE MEASURE
428
ENCRYPTION
430
HOST SECURE CHANNEL
150
NETWORK SERVICE CONTROL LINK
152
POLICY CONTROL SERVER
154
ACCESS CONTROL INTEGRITY SERVER
156
SERVICE HISTORY SERVER
158
SERVICE CONTROLLER
122
330 MODEM LOCAL CHANNEL
ACCESS NETWORK
136
130
702
APPLICATION EXECUTION PARTITION
APP 106A
APP 106C
APP PARTITION DAS AGENTS
104
SERVICE MEASURE-MENT AND/OR POLICY CONTROL DRIVERS
210
OS DRIVER FRAMEWORK AND INTERFACE
APP IDENTIFY
722
OS STACK
708
720
712 KERNEL EXECUTION PARTITION
BUS DRIVER
432
MODEM BUS
120
BUS DRIVER
121
324 MODEM EXECUTION PARTITION
MODEM CONTROL LINK
ENCRYPTION
MODEM AGENT
MODEM
128
225
226
125 MODEM SUB SYSTEM

Fig. 10

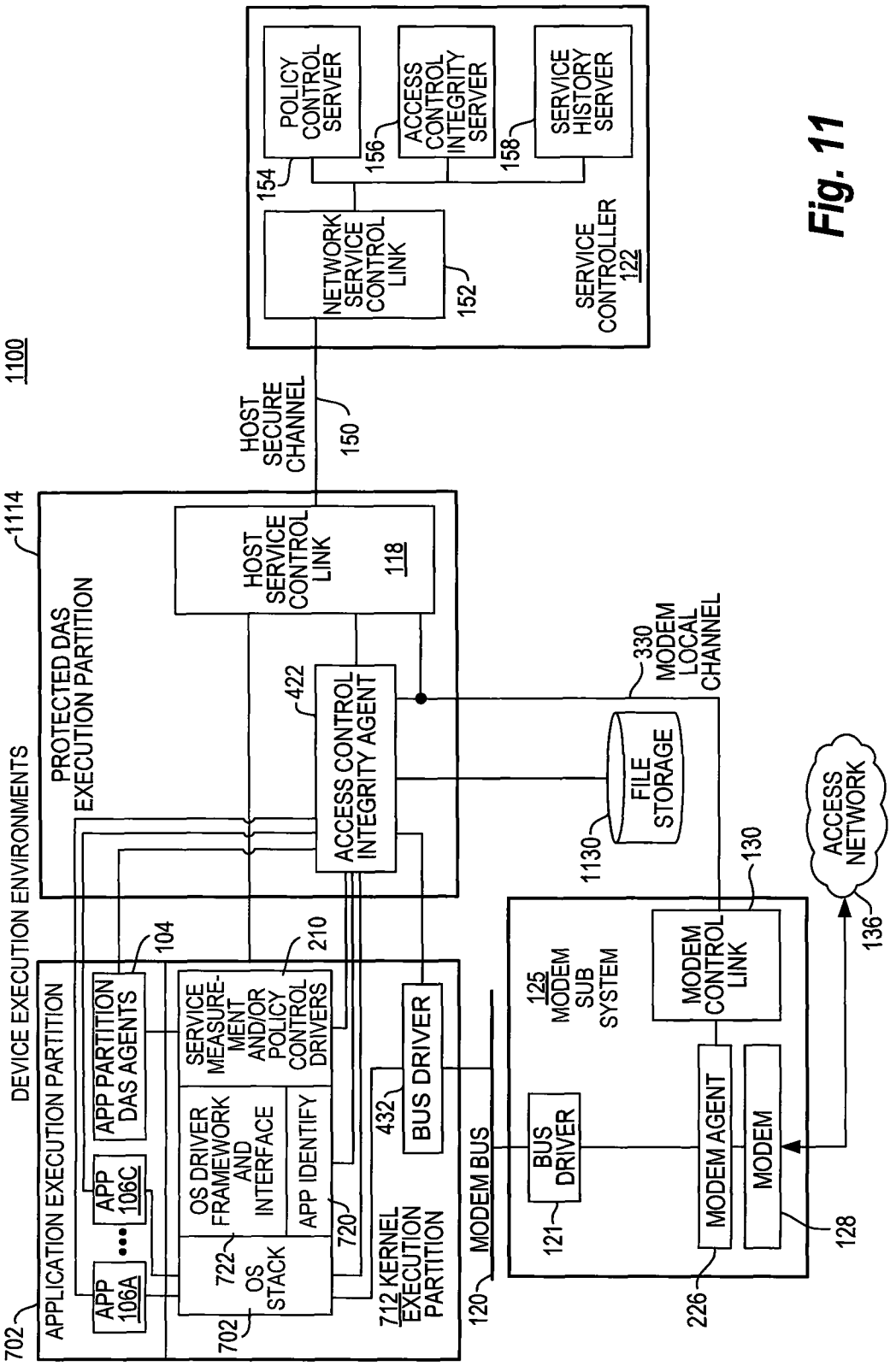
1100
DEVICE EXECUTION ENVIRONMENTS
1114
PROTECTED DAS EXECUTION PARTITION
HOST SERVICE CONTROL LINK
118
422
ACCESS CONTROL INTEGRITY AGENT
HOST SECURE CHANNEL
150
NETWORK SERVICE CONTROL LINK
152
POLICY CONTROL SERVER
154
ACCESS CONTROL INTEGRITY SERVER
156
SERVICE HISTORY SERVER
158
SERVICE CONTROLLER 122
330 MODEM LOCAL CHANNEL
FILE STORAGE
1130
ACCESS NETWORK
136
130
MODEM CONTROL LINK
125 MODEM SUB SYSTEM
BUS DRIVER
121
MODEM AGENT
MODEM
128
226
MODEM BUS
120
BUS DRIVER
432
712 KERNEL EXECUTION PARTITION
APPLICATION EXECUTION PARTITION
702
APP 106A
APP 106C
APP PARTITION DAS AGENTS
104
SERVICE MEASURE-MENT AND/OR POLICY CONTROL DRIVERS
210
OS DRIVER FRAMEWORK AND INTERFACE
APP IDENTIFY
720
722 OS STACK
702

Fig. 11

SECURITY TECHNIQUES FOR DEVICE ASSISTED SERVICES

CROSS REFERENCE TO OTHER APPLICATIONS

This application is a continuation of application Ser. No. 12/694,445, filed Jan. 27, 2010, entitled SECURITY TECHNIQUES FOR DEVICE ASSISTED SERVICES, which is a continuation-in-part of application Ser. No. 12/380,780, filed Mar. 2, 2009, entitled AUTOMATED DEVICE PROVISIONING AND ACTIVATION, both of which are incorporated herein by reference for all purposes.

Application Ser. No. 12/694,445, filed Jan. 27, 2010, entitled SECURITY TECHNIQUES FOR DEVICE ASSISTED SERVICES, claims the benefit of provisional Application No. 61/206,354, filed Jan. 28, 2009, entitled SERVICES POLICY COMMUNICATION SYSTEM AND METHOD, provisional Application No. 61/206,944, filed Feb. 4, 2009, entitled SERVICES POLICY COMMUNICATION SYSTEM AND METHOD, provisional Application No. 61/207,393, filed Feb. 10, 2009, entitled SERVICES POLICY COMMUNICATION SYSTEM AND METHOD, provisional Application No. 61/207,739, filed Feb. 13, 2009, entitled SERVICES POLICY COMMUNICATION SYSTEM AND METHOD, and provisional Application No. 61/252,151, filed on Oct. 15, 2009, entitled SECURITY TECHNIQUES FOR DEVICE ASSISTED SERVICES, all of which are incorporated herein by reference for all purposes.

Application Ser. No. 12/380,780, filed Mar. 2, 2009, entitled AUTOMATED DEVICE PROVISIONING AND ACTIVATION, claims the benefit of provisional Application No. 61/206,354, filed Jan. 28, 2009, entitled SERVICES POLICY COMMUNICATION SYSTEM AND METHOD, provisional Application No. 61/206,944, filed Feb. 4, 2009, entitled SERVICES POLICY COMMUNICATION SYSTEM AND METHOD, provisional Application No. 61/207,393, filed Feb. 10, 2009, entitled SERVICES POLICY COMMUNICATION SYSTEM AND METHOD, and provisional Application No. 61/207,739, filed Feb. 13, 2009, entitled SERVICES POLICY COMMUNICATION SYSTEM AND METHOD.

BACKGROUND OF THE INVENTION

With the advent of mass market digital communications, applications and content distribution, many access networks such as wireless networks, cable networks and DSL (Digital Subscriber Line) networks are pressed for user capacity, with, for example, EVDO (Evolution-Data Optimized), HSPA (High Speed Packet Access), LTE (Long Term Evolution), WiMax (Worldwide Interoperability for Microwave Access), DOCSIS, DSL, and Wi-Fi (Wireless Fidelity) becoming user capacity constrained. In the wireless case, although network capacity will increase with new higher capacity wireless radio access technologies, such as MIMO (Multiple-Input Multiple-Output), and with more frequency spectrum and cell splitting being deployed in the future, these capacity gains are likely to be less than what is required to meet growing digital networking demand.

Similarly, although wire line access networks, such as cable and DSL, can have higher average capacity per user compared to wireless, wire line user service consumption habits are trending toward very high bandwidth applications and content that can quickly consume the available capacity and degrade overall network service experience. Because

some components of service provider costs go up with increasing bandwidth, this trend will also negatively impact service provider profits.

BRIEF DESCRIPTION OF THE DRAWINGS

Various embodiments of the invention are disclosed in the following detailed description and the accompanying drawings.

FIG. **1** illustrates a secure execution environment for device assisted services in accordance with some embodiments.

FIG. **2** illustrates another secure execution environment for device assisted services in accordance with some embodiments.

FIG. **3** illustrates another secure execution environment for device assisted services in accordance with some embodiments.

FIG. **4** illustrates another secure execution environment for device assisted services in accordance with some embodiments.

FIG. **5** illustrates another secure execution environment for device assisted services in accordance with some embodiments.

FIG. **6** illustrates another secure execution environment for device assisted services in accordance with some embodiments.

FIG. **7** illustrates another secure execution environment for device assisted services in accordance with some embodiments.

FIG. **8** illustrates another secure execution environment for device assisted services in accordance with some embodiments.

FIG. **9** illustrates another secure execution environment for device assisted services in accordance with some embodiments.

FIG. **10** illustrates another secure execution environment for device assisted services in accordance with some embodiments.

FIG. **11** illustrates another secure execution environment for device assisted services in accordance with some embodiments.

DETAILED DESCRIPTION

The invention can be implemented in numerous ways, including as a process; an apparatus; a system; a composition of matter; a computer program product embodied on a computer readable storage medium; and/or a processor, such as a processor configured to execute instructions stored on and/or provided by a memory coupled to the processor. In this specification, these implementations, or any other form that the invention may take, may be referred to as techniques. In general, the order of the steps of disclosed processes may be altered within the scope of the invention. Unless stated otherwise, a component such as a processor or a memory described as being configured to perform a task may be implemented as a general component that is temporarily configured to perform the task at a given time or a specific component that is manufactured to perform the task. As used herein, the term 'processor' refers to one or more devices, circuits, and/or processing cores configured to process data, such as computer program instructions.

A detailed description of one or more embodiments of the invention is provided below along with accompanying figures that illustrate the principles of the invention. The invention is described in connection with such embodiments, but the

invention is not limited to any embodiment. The scope of the invention is limited only by the claims and the invention encompasses numerous alternatives, modifications and equivalents. Numerous specific details are set forth in the following description in order to provide a thorough understanding of the invention. These details are provided for the purpose of example and the invention may be practiced according to the claims without some or all of these specific details. For the purpose of clarity, technical material that is known in the technical fields related to the invention has not been described in detail so that the invention is not unnecessarily obscured.

In some embodiments, security techniques for device assisted services are provided. In some embodiments, secure service measurement and/or control execution partition techniques for device assisted services are provided. In some embodiments, a secure execution environment for device assisted services is provided. In some embodiments, a secure stack for device assisted services is provided. In some embodiments, a secure memory for device assisted services is provided. In some embodiments, a secure modem for device assisted services is provided (e.g., providing a secure communication link between the modem/modem driver and a service processor and/or agent on the device, such as a communications device or an intermediate networking device). In some embodiments, one or more secure monitoring points for device assisted services are provided. In some embodiments, one or more secure monitoring points with verification for device assisted services are provided (e.g., a secured monitoring point can be provided in a modem, which communicates securely to a secured execution environment in a CPU/processor, which can then verify such service usage measures). In some embodiments, a secure bus for device assisted services is provided. In some embodiments, a secure execution environment in the CPU/processor for device assisted services is provided. In some embodiments, secure access to a secure execution environment(s) for device assisted services is provided (e.g., securing communication from a bottom of the stack, such as modem drivers, which require credentials to access the bus as controlled by a service processor or secure agent on the device, and in which the traffic on the bus is encrypted). In some embodiments, various secure execution environments for device assisted services are provided using various hardware partition techniques (e.g., secure memory, secure modems, secure memory partition(s) in the CPU/processor), as described herein.

In some embodiments, device assisted services (DAS) provide for one or more of device based service usage measurements, service usage policy implementation, service usage accounting, service usage control, and any of the other functions described in various embodiments that assist, replace, and/or augment network based functions. For example, various DAS embodiments perform one or more of the following: facilitate and control activation to one or more access service networks; measure access and/or service usage on one or more access networks; control access and/or service usage on one or more access networks; account for different types of service usage on one or more access networks; implement quality of service (QOS) controls, collect and report QOS traffic demand, aggregate multiple device QOS demand reports to asses a measure of overall network QOS demand, and/or facilitate QOS resource allocation; and/or facilitate roaming between access networks. There are many more functions and embodiments for DAS as described with respect to various embodiments.

In some embodiments, various program/functional elements that perform the functions to implement various DAS embodiments are referred to herein as DAS agents or device assisted service agents, or in some embodiments, more specific terms are used to be more descriptive in specific examples. In some embodiments, device assisted service agent functions include service measurements and/or service measure recording and/or service measure reporting (e.g., to the service controller, the device, the user, or other device agents) and/or service measure synchronization (e.g., between device and network). In some embodiments, device assisted service agent functions include service usage controls and/or service usage control policy settings. In some embodiments, service usage controls include one or more of network authorization, network authentication, network admission, access control, service usage activity classification, allowing or disallowing one or more service usage activity and traffic shaping for one or more service usage activity.

In some embodiments, device assisted service agent functions include one or more of the following: reporting service usage to QOS control elements in the network, receiving QOS assignment from the network, reporting QOS assignments to the network, and/or communicating with QOS service reservation elements in the network. In some embodiments, device assisted service agent functions include one or more of implementing QOS service controls on the device based on one or more of the following criteria: fair queuing of service usage activities, differentiated QOS based on an assigned QOS hierarchy of service usage activities, service usage activity QOS assignments from the network for one or more service usage activities, service usage activity policy directives from the network for one or more service usage activities.

In some embodiments, a service control link is used for communication between the device assisted service agents and the service controller. In some embodiments, the service control link is a secure link (e.g., an encrypted communication link).

In some embodiments, the device assisted service agent functions include device assisted service system communication, measuring and/or recording and/or reporting and/or synchronizing service measures, observing communicating information for service control integrity, communicating information for service control policy instructions and/or settings, or updating device assisted software and/or agent settings.

In some embodiments, device assisted service on the device includes the following: service measurements, service controls, user interface and usage reporting, user policy options, accept policy instructions, protected execution partition provided to prevent hacking, malware, errors, and other security techniques. In some embodiments, device assisted service on the server includes one or more of the following: set policy, set configurations, install/update agents, check usage versus policy, check proper operation of agents, synchronize usage from network to device, and other verification techniques. For example, when errors in policy enforcement are detected, servers can perform actions to either further observe, quarantine, or suspend the device.

In some embodiments, a control server/control service network element receives service measures from the device. In some embodiments, the control server/control service network element receives service measures from the network. In some embodiments, the control server/control service network element sets policies and manages service across multiple networks (e.g., while one modem is shown in various figures, multiple modems can be employed for multiple networks with consistent service usage measures, service con-

trols, QOS controls, UI (User Interface), user preferences, user usage reporting, and/or other settings/controls across different networks).

In some embodiments, traffic type refers to one or more of the following: best effort network traffic, real-time traffic (e.g., live voice such as VoIP, live video, etc.), streaming traffic, multi-cast traffic, uni-cast traffic, point to point traffic, file types, traffic associated with an application, real time traffic, traffic with an assigned priority, traffic without an assigned priority, and traffic for a certain network.

In some embodiments, service usage activity refers to a usage of service by a device. In some embodiments, service usage activity can be one or more of connection to an access network, connection to certain destinations, URLs or addresses on a network, connection to the network by one or more applications, transmission of certain types of traffic, a type of transaction based service, a type of advertising based services, or a combination of one or more of the following: an application type, a network destination/address/URL, a traffic type, and a transaction type.

In some embodiments, protection of the device assisted service agents/functional elements to protect the functions that perform the device assisted functions is provided with a protected execution partition on the CPU (Central Processor Unit), APU (Auxiliary Processor Unit), or another hardware based processor. For example, such hardware protected execution capabilities in the CPU, APU, or other processor can be combined in some embodiments with either OS software functions or other native mode software functions to create secure program execution partitions as described herein. In some embodiments, the term host is used to refer to the hardware and firmware and/or software system that executes the device applications and networking stack. In some embodiments, some of the device assisted service agents/functions are implemented in a modem execution partition environment.

FIG. **1** illustrates a secure execution environment **100** (e.g., for a communications device) for device assisted services in accordance with some embodiments. As shown in FIG. **1**, the device execution environments include program/functional elements for a communications (e.g., a communications device can be an intermediate networking device, such as 3G/4G WWAN to WLAN bridges/routers/gateways, femto cells, DOCSIS modems, DSL modems, remote access/backup routers, and other intermediate network devices, or a mobile communications device, such as a mobile phone, a PDA, an eBook reader, a music device, an entertainment/gaming device, a computer, laptop, a netbook, a tablet, a home networking system, and/or any other mobile communications device) device that utilizes the modem subsystems #**1** (**125**) through #N (**127**) to connect to one or more of the access networks #**1** (**136**) through #N (**138**). In some embodiments, a communications device includes multiple program execution partitions. As shown in FIG. **1**, four execution partitions are provided: an application execution partition **102** in which, for example, application programs execute, a kernel execution partition **112** in which, for example, the lower level drivers and basic low level OS programs execute, a protected device assisted service (DAS) execution partition **114** (also referred to as protected DAS partition) in which, in some embodiments, some or all of the device assisted service agents and/or functions execute, and a modem execution partition **124** in which, for example, the modem program elements execute and, in some embodiments, some or all of the device assisted service agents and/or functions execute. In some embodiments, each of these execution partitions are optimized for different software functions, each providing programs with the basic physical memory, data memory, CPU or APU or modem processor execution resources, high level and/or low level OS, memory management, file storage, I/O device resources (e.g., user interface (UI), peripherals, etc.), network communications stack, other device resources, and/or other resources that are required or used for operation of the programs. The collection of these hardware and software resources for the CPU or APU is sometimes referred to herein with the term host.

As shown, FIG. **1** illustrates an application execution partition **102** and a kernel execution partition **112**, which are shown as separate partitions within the device execution environments. For example, this separation is based on the manner in which "kernel programs" (e.g., drivers and network stack, etc.) are commonly supported as compared to "application programs" (e.g., browsers, word processors, user interfaces, etc.) within the context of several different popular operating systems (OS) (e.g., Windows, UNIX, Linux, MAC OS, certain mobile device OSs, certain embedded device OSs, etc.). In some embodiments, this functional separation is not required, and, in some embodiments, other functional separations are supported.

As shown in FIG. **1**, protected device assisted service agents, such as the protected DAS partition device assisted service agents **110**, execute in the protected DAS partition **114** while unprotected device assisted service agents and/or OS networking stack elements and applications (e.g., applications **106**A through **106**C) execute outside of the secure device assisted service execution partition **114**, such as the application partition device assisted service agents **104** and the OS networking stack and/or kernel partition device assisted service agents **108**. For example, the protected DAS partition **114** can make it more difficult for a hacker, malware or system errors to compromise, attack or modify the device assisted service measurements, service policy implementation or service usage control operations on the device (e.g., communications device). In some embodiments, the protected DAS partition **114** need not support open access to all programs and OS elements so that it can be easier to protect. Also, as shown, a bus driver **116** in the application execution partition **102** provides for communication with a modem bus **120**, which is in communication with a bus driver **121** in the modem execution partition **124**. The protected DAS partition also includes a host service control link **118**, which facilitates communication with a host secure channel **150** as shown.

In some embodiments, the protected DAS partition **114** is a protected execution partition on the main device that is supported by certain configurations in the host (e.g., a secure virtual execution environment or a separate hardware security function). For example, this protected execution partition can be used to provide added service measurement integrity and/or service control integrity for a device assisted service enabled device. In some embodiments, as described herein, the operating system (OS) also performs a role in establishing the protected execution partition for secure operation of device assisted services, and, in some embodiments, this role is performed by native software or firmware operating on secure hardware elements.

In some embodiments, the DAS agents responsible for maintaining service control integrity execute in the protected DAS partition **114**. For example, the protected DAS partition device assisted service agents **110** can include one or more of the following: one or more service usage measurement functions; some or all of the device networking stack functions that are monitored and/or controlled by the device assisted services system; device drivers that interface to an OS networking stack to observe or manipulate stack traffic; access

control integrity functions; service policy control functions; service UI functions; application identification functions, and/or functions to classify service usage activities by combinations of application, address/URL and/or traffic type; modem bus driver functions; and/or modem data encryption functions to prevent other unauthorized programs from bypassing the device assisted service measurements and/or controls by directly accessing the modem around the stack. In some embodiments, the system designer or a given set of design criteria determine which of the various described device assisted agent functions should be executed in protected DAS partition **114** to strengthen the service control integrity for the system.

In some embodiments, the device operating system provides for the protected DAS partition **114** in addition to conventional security features available in the operating system. In some embodiments, the protected DAS partition **114** provides an execution partition with increased program execution protection in which, for example, service measurement and/or service control programs (agents) can execute in a mode that provides for higher access control integrity (e.g., proper service usage reporting and/or service measurement and/or service control system operation with increased protection from attacks, errors, malware, etc.). In some embodiments, a hardware assisted secure execution partition provides for increased program execution protection for device assisted service agent functions.

In some embodiments, a service control link (e.g., host service control link **118** via host secure channel **150** to network service control link **152**) is used for communication between the device assisted service agents and a service controller **122**. In some embodiments, the service control link is a secure link (e.g., an encrypted communications link). In some embodiments, an encrypted secure control link can be implemented over the higher layers of the network stack (e.g., TCP, HTTP, TLS, etc.), and, in some embodiments, the encrypted link can be implemented over lower layers in the network stack, such as the IP layer or the access network layers (e.g., the WWAN device management channels or signaling layers). In some embodiments, service control link security is provided at least in part by encrypting link traffic between the device and the service controller **122**. In some embodiments, service control link security is provided at least in part by running the service control link device side program agents in the protected DAS partition **114**. In some embodiments, service control link security is achieved at least in part by restricting access to the service control link to certain device assisted service agents that are allowed to communicate with the service controller **122**. In some embodiments, the agents that are allowed to communicate with the service control link perform such communications using encrypted communications. In some embodiments, the encrypted communications is accomplished with a secure inter-agent communication bus on the device. In some embodiments, the only mechanism for modifying the configuration of the operation, execution code, execution instructions and/or settings of certain device assisted service processor agents executing in the protected DAS partition **114** is through the service control link. In some embodiments, the only mechanism for modifying any program elements executing inside the protected DAS partition **114** is through the service control link so that only the service controller **122** may modify the operation or service policy settings for the agents located in the service measurement and/or service control execution partition.

As shown in FIG. **1**, various server functions within the service controller **122** are provided. In some embodiments, a service history server **158** collects service usage measures from one or more of the device DAS agents and/or from various sources of potential network based service usage databases, such as the access network service usage **142** (e.g., carrier charging data record (CDR) systems), private network service usage **144** (e.g., MVNO or enterprise network service usage accounting system), and/or billing, mediation service usage log, reconciliation **148** (e.g., service provider billing or mediation system). In some embodiments, an access control integrity server **156** is used to compare various access control verification checks to ensure that the device assisted service agents have not been compromised. The various embodiments used in the access control integrity server **156** to perform these integrity checks are described with respect to various embodiments. Some embodiments include comparing device based service usage measures versus the service usage that should result if the desired service policy were properly implemented, comparing device based service usage measures versus the service usage that should result if the desired service policy were properly implemented with device based service usage measures that are executing in the protected DAS partition **114** and/or the modem execution partition **124**, comparing network based service usage measures versus the service usage that should result if the desired service policy were properly implemented, and comparing network based service usage measures with device based service usage measures. In some embodiments, a policy control server **154** stores policy settings for the various service plans that can be implemented on the device, and communicates the appropriate policy settings to the appropriate device DAS agents.

In some embodiments, the service controller **122** has secure access to service measures, service control settings, software images, software security state(s), and/or other settings/functions, for example, by virtue of the hardware enhanced execution partition and the secure channel into the protected DAS partition **114**. For example, the host secure channel **150** can be encrypted employing keys that are public/private or point to point private. Also, other link security, for example, can be implemented as described herein. For example, servers can ensure that the link remains authenticated and information is validated. For example, the service controller can perform one or more of the following verification techniques: compare the monitored service usage versus the policy, compare the monitored service usage versus other service usage measures and/or combined with various other network service usage measures.

In some embodiments, the protected DAS partition **114** includes a host service control link **118** as shown in FIG. **1** that works in combination, that is, in communication with a network service control link **152** to send and receive secure messages between the service controller and the host via a host secure channel **150**. In some embodiments, the protected DAS partition **114** only accepts new program images from the service controller **122** and not from local programs or disks. In some embodiments, the protected DAS partition **114** cannot communicate with other applications and/or kernel programs. In some embodiments, the protected DAS partition **114** can also communicate with other applications and/or kernel programs but only to gather information or to set settings. In some embodiments, the protected DAS partition **114** can also communicate with other applications and/or kernel programs but only through a restricted encrypted communication bus that restricts outside program access to protected programs or agent functions, and can also restrict the agents inside of the protected partition from accepting unauthorized information or code modifications from programs outside the protected partition. Various other security tech-

niques can be provided for the DAS execution environments as will be apparent to one of ordinary skill in the art in view of the embodiments described herein.

In some embodiments, the protected DAS partition **114** is created by employing CPU or APU hardware security features in addition to or in alternative to other software security features (e.g., virtual execution partitions) that can be provided by the operating system and/or other software. In some embodiments, the host hardware security features are provided with the operating system secure kernel operating modes. In some embodiments, the host hardware security features used for secure device assisted service execution partition operation are independent of the operating system kernel (e.g., implemented in secure program partitions in a separate secure program area not directly controlled by the OS and/or software that does not have access to the partitions).

In some embodiments, the hardware security features that support the protected DAS partition **114** include preventing other elements on the device from writing and/or reading certain memory areas reserved for device assisted service agents and/or control link functions. In some embodiments, this memory protection function is accomplished by locating the memory in a secure hardware partition that cannot be accessed by unauthorized device program elements (e.g., a separate bank of isolated memory space within the host CPU). In some embodiments, this memory protection function includes encrypting traffic to and from memory so that only authorized device program elements posses the counterpart encryption capability to access the memory. In some embodiments, the mechanism to access device assisted service agent memory and/or certain data elements is restricted to authorized device assisted service agents and/or the service controller via the service control link so that unauthorized program elements on the device cannot alter the device assisted service agent code and/or operation.

In some embodiments, the hardware security features that support the protected DAS partition **114** includes preventing unauthorized elements on the device from accessing the protected storage and/or file storage (e.g., "protected storage," such as disk storage, non-volatile memory, embedded non-volatile memory, such as NVRAM, flash or NVROM, securely embedded non-volatile memory, and/or other types of storage) that is used to store the device assisted service agent programs. In some embodiments, this protected storage is maintained within the secure hardware partitions that also execute one or more of the device assisted service agents so that only authorized device assisted service agents have access to the storage locations. In some embodiments, the images that are stored in such protected file storage must be properly encrypted and signed for a boot loader to authorize loading the device assisted service agent programs into execution memory, and in some embodiments, if the images are not properly signed then an access control integrity error is generated and/or the program is not loaded. In some embodiments, such properly signed DAS images can only be obtained from the service controller. In some embodiments, such DAS images can only be loaded into protected file storage by the service controller. In some embodiments, the hardware security features that prevent unauthorized elements on the device from accessing the protected file storage include encrypting all traffic to and from the secure storage so that only authorized device program elements possess the counterpart encryption capability to access the storage. In some embodiments, access or access rights to re-program a device assisted service agent program store is restricted to the service controller via the service control link so that unauthorized program elements on the device are not authorized to alter the device assisted service agent code and/or operation.

In some embodiments, the hardware security features that protect device assisted service agent storage include a protected DAS partition in which an access control integrity agent function is isolated from other device program elements, and a secure service control link is also isolated in a similar manner, and the access control integrity agent scans the execution memory, data memory and/or file storage used by one or more device assisted services agents to measure and/or control services. In some embodiments, the purpose of the scan is to detect changes to the device assisted service agent code and/or data. In some embodiments, the purpose of the scan is to detect other unauthorized program elements or data that may be present in reserved or protected areas used for device assisted service agent execution. In some embodiments, reports of such scan audits are reported over the service control link to the service controller for further processing by use of cloud based resources to identify access control integrity violations. In some embodiments, the access control integrity agent functions include one or more of hashing other device assisted security agents, querying other device assisted security agents, observing the operation of other device assisted security agents or monitoring service measures and then either evaluating the results locally on the device to determine if they are within pre-defined allowable parameters or sending at least some of the results to the service controller for further analysis via the service control link. In some embodiments, the scan audits are compared with earlier versions of the scans to compare code configuration or operational characteristics. In some embodiments, the scan audits are compared against known databases for the code or operational characteristics that should be present in the DAS agents.

In some embodiments, an access control integrity agent, or a new version of the access control integrity agent can be downloaded by the service controller over the secure service control link. For example, this technique provides for a real time assessment of device service control security state as described above in the event that corruption or compromise of the secure device assisted service agent(s) has occurred. In some embodiments, the access control integrity agent that is downloaded can have a different configuration and/or operation than any agent previously loaded onto the device so that it is difficult or impossible for a hacker or malware to spoof the operation of the agent in a short period of time. For example, by requiring the agent to report security assessments back to the server in a period of time that is typically less than what is required to spoof the agent, the agent will either report back an accurate assessment of device status or will be blocked by a hacker or malware, and both of these conditions can provide the information required to take action if the device assisted services system has been corrupted or compromised.

In some embodiments, the protected DAS partition and/or the modem execution partition can be used to securely store some or all of the device credentials that are used for one or more of device group association, activation, authorization to the access network and/or the DAS network, service level, and service usage accounting and/or billing.

In some embodiments, the modem subsystem also includes DAS elements that strengthen the access control integrity of the DAS system. As shown in FIG. **1**, one or more modems can include, in some embodiments, DAS agent functions labeled modem partition DAS agents **126**. The modem execution partition **124** of the modem sub system #**1** (**125**) of the modem execution partition **124** includes modem partition

DAS agents **126** in communication (e.g., secure communication, such as using encrypted communications) with a modem **128** and a modem service control link **130**, which is in communication with the network service control link **152** via the modem secure channel #**1** (**132**), as shown. Also, the modem **128** is in communication (e.g., secure communication, such as using encrypted communications) with the access network #**1** (**136**), which is in communication with the access network service usage **142** and the Internet **140**, which is in communication with a private network **146**, which is in communication with the private network service usage **144**, as shown.

Example embodiments for DAS agent functions that execute in the modem execution partition include modem encryption and modem service usage measures. In other embodiments, the modem execution partition can also include higher level DAS agent functions, such as stack traffic classification, stack manipulation, access control, and/or traffic control. For example, the modem execution partition can also include a full service processor that is fully capable of managing all aspects of service usage measurement and/or service control. It will now be apparent to one of ordinary skill in the art that the modem execution partition can employ a number of the service security embodiments described in the context of the protected DAS partition, for example, to enhance the service integrity of the DAS system. For example, the DAS agents on the modem can be stored in an encrypted and signed format on non-volatile (NV) memory on the modem that is only accessible by the network service control link or by a local secure control link from the protected DAS partition to the modem execution partition. As shown in FIG. **1**, a separate secure modem control channel (e.g., modem secure channel #**1** (**132**) through modem secure channel #N (**134**)) that is distinct from the host secure control channel **150** is provided. This separate modem control channel can either be implemented over the higher network layers of the device or over the lower access network layer so that special access to access network resources is required to even connect to the modem DAS agents **126** thereby further enhancing service control related security.

In some embodiments, the protected DAS partition provides for performing the DAS agent functions required for parental controls, enterprise WWAN management controls or roaming controls, and/or usage reporting in the protected execution space. In view of the DAS embodiments described herein, it will now be apparent to one of ordinary skill in the art how to implement such protected controls for these various and other application scenarios.

In some embodiments, a protected DAS partition provides for performing a virtual machine (VM) on top of a secure machine. The device application OS that is accessible by software that can be installed without special permissions can be isolated from the secure hardware and/or OS that is running under the VM. Using these techniques, malware can be "cocooned in" on the VM OS rather than "walled out" as discussed with respect to various embodiments described herein.

In some embodiments, communication between program/functional elements outside of the protected DAS partition to DAS agents inside the protected DAS partition is controlled by a secure encrypted channel. In some embodiments, only programs/functions that have access to communicate with DAS agents are allowed to do so, and, in some embodiments, even these outside programs are not allowed to modify the DAS agent configuration, only to report information and/or receive information.

For example, various embodiments can be used to connect to multiple access networks through multiple modems, with each modem potentially being associated with a different set of DAS service policies corresponding to the different types of access networks supported. In some embodiments, such as for 3G/4G modems, WWAN/WLAN modems, and various other multiple modem embodiments, the multiple modems can also be provided on the same multi-mode modem subsystem rather than on different modem subsystems.

In some embodiments, the various techniques and embodiments described herein can be readily applied to intermediate networking devices as will now be apparent to one of ordinary skill in the art. For example, an intermediate networking device can includes some or all of the DAS agents for managing, controlling, and/or measuring service usage for one or more devices in communication with a wireless network via the intermediate networking device, in which the DAS agents can be executed in secure execution environments or secure execution partitions using the various techniques described herein. In some embodiments, intermediate networking devices include, for example, WWAN/WLAN bridges, routers and gateways, cell phones with WWAN/WLAN or WWAN/Bluetooth, WWAN/LAN or WWAN/WPAN capabilities, femto cells, back up cards for wired access routers, and other forms/types of intermediate networking devices.

FIG. **2** illustrates another secure execution environment **200** for device assisted services in accordance with some embodiments. In particular, FIG. **2** illustrates an embodiment in which DAS agents do not actually replace the OS network stack elements, but instead one or more DAS agents include device driver programs that interface into the network stack and pass (e.g., securely communicate) traffic information or actual traffic back and forth with the stack. These device driver interface constructs are labeled OS driver framework and interface **208** as shown in FIG. **2**. Example OS system constructs that provide for this type of architecture for DAS agents include Windows NDIS and/or TDI drivers, Windows Filter Platform (WFP), Berkeley Packet Filter, ipfw (e.g., a BSD packet filter that can be used for various OSs, such as Unix, Linux, MAC OS), and/or other platforms/programs performing these or similar functions. While these OS stack options are not secure in themselves, if the drivers that interface with them are secured as illustrated in FIG. **2** by executing the drivers in the protected DAS partition **214**, then higher overall access control integrity/security levels can be achieved.

As shown in FIG. **2**, the service measurement and/or policy control drivers **210** executed in the protected DAS partition **214** represent the DAS drivers that interface to the OS stack device driver interface constructs labeled OS driver framework and interface **208** executed in the kernel execution partition **212**, which are in communication with/interface with OS Stack API(s) **207**. As also shown, applications, such as applications **106**A through **106**C execute in the application execution partition **202**. In some embodiments, service access control integrity is further enhanced by placing additional measurement points outside of the network stack, so that, for example, if the network stack service usage reporting is hacked, corrupted, and/or compromised, there is a secure additional or back-up service measure located on the device and/or in the network (e.g., modem agent **226** as shown in FIG. **2**, which provides a service measurement point in the modem for measuring service usage by the device, and as shown also provides for secure communication with the modem agent **226** using modem encryption **225**). For example, the service measure provided by the modem agent **226**, modem encryption **225**, and/or modem bus **120** functions shown in FIG. **2** can be executed in a protected partition (e.g., modem execution partition **124** as shown in FIG. **2** can

be implemented as a secure or protected partition using the various techniques described herein).

FIG. **3** illustrates another secure execution environment **300** for device assisted services in accordance with some embodiments. As shown, some stack elements are executed in the kernel execution partition **312** and some stack elements are executed in the protected DAS execution partition **314**. In some embodiments, the DAS agents **104** executed in the application execution partition **302** are directly monitoring and/or controlling stack traffic by intercepting it and imposing additional traffic measurement and/or filtering. Examples of such techniques are described herein with respect to various embodiments. As shown in FIG. **3**, the network stack elements **308** are the OS stack elements that reside in the kernel execution partition **312** and the protected DAS network stack elements **310** are the stack elements that reside in protected DAS execution partition **314**. For example, as some or potentially all of the stack network traffic processing resides in the protected DAS execution partition **314**, a high level of service control integrity can be maintained using these techniques. For example, the modem bus driver **121** can be executed in a secure execution partition, such as modem execution partition **324**, which can be implemented as a secure execution partition using the various techniques described herein, or the modem bus driver **121** can be executed in the protected DAS execution partition **314**, so that unauthorized programs can be blocked from accessing the access network through the modem.

In some embodiments, the entire stack is executed in the protected DAS execution partition **314** with only a stack API executing in kernel execution partition **312**. Various other embodiments involve implementing a minimum (e.g., in terms of a number of agents and/or functionality) in the protected DAS execution partition **314** required to secure a service measure that can be used to confirm the integrity of the service policy implementation (e.g., as described with respect to various other embodiments disclosed herein). As will now be apparent to one of ordinary skill in the art, various combinations of stack processing functions can be implemented in a secure host execution partition to strengthen the service measurement and/or service control integrity of the DAS system using the techniques and/or similar techniques to the various techniques described herein.

In some embodiments, the stack elements implemented in the protected DAS execution partition can include stack API, sockets layer, TCP, UDP, service measurements at one or more points in the stack, IP layer processing, VPN/IPSEC, PPP, access control, traffic classification, traffic queuing, traffic routing, traffic QOS, traffic demand reporting to QOS allocation servers, traffic statistics reporting to the QOS servers, traffic QOS reservation requests including by traffic type or app type or service priority to the servers, traffic throttling, traffic statistics gathering, traffic QOS priority identification, modem drivers, modem data encryption, and/or other stack element functionality or features.

In some embodiments, the above discussed service control mechanisms are controlled by policy commands received over the service control link from the servers or other authorized network elements. In some embodiments, the device also reports usage measures to servers or other authorized network elements. In some embodiments, the device also reports QOS demand to the servers or other authorized network elements and/or accepts QOS instructions from the servers or other authorized network elements. In some embodiments, the device reports traffic statistics, projected traffic demand, application usage, projected QOS demand can all be reported to the servers or other authorized network elements for the purpose of provisioning the right amount of data bandwidth and traffic priority to the device, and the servers or other authorized network elements aggregate such reports from many different devices to project needed allocations across the entire network and make global bearer channel level or base station level decisions bearer channel allocation and bearer channel QOS allocation decisions, which can also be tied into a bearer channel provisioning, or bearer channel QOS provisioning apparatus or other authorized network elements located in the access network.

For example, as will now be apparent to one of ordinary skill in the art in view of the various embodiments described herein, additional security measures, can be added in some embodiments to augment the secure service partitioning, including, for example, access control integrity checks. For example, in addition to the service control policy instructions that can be received from the servers or other authorized network elements, an intermediate policy control agent can be present to make additional higher level decisions on how instantaneous policy should be implemented.

As shown in FIG. **3**, the modem control link, shown as modem local channel **330**, provides a link from local connection to the host service control link **118**, which in turn connects through the host secure channel **150** to the service controller **152**. This communication channel can also be implemented or configured to provide for encrypted communication and, in some embodiments, can be used as an alternative to the direct connection from the modem service control link to the network service control link as disclosed with respect to other figures and various embodiments as described herein.

As shown in FIG. **3**, the final stack elements that feed or communicate with the modem bus driver **121** are the protected DAS network stack elements **310** located in the protected DAS execution partition **314** (illustrated as a solid line in FIG. **3**), or, in some embodiments, can be the network stack elements **308** located in the kernel execution partition **312** (illustrated as a dashed line in FIG. **3**). In some embodiments, these final stack elements feed or communicate with the modem subsystem **125**. In some embodiments, the modem subsystem **125** includes an encrypted link so that the stack elements **310** in the protected DAS execution partition **314** can communicate with the modem **128** but other software programs or hardware elements cannot, for example, thereby preventing the service measures and/or controls from being inappropriately bypassed or otherwise comprised. For example and as similarly discussed above, the modem subsystem **125**, for example, can include its own the protected execution partition using various techniques described herein. The modem protected execution partition, for example, can also include a service measure (e.g., modem agent **226** can provide such a service measurement point in the modem subsystem **125**, as similarly described above with respect to FIG. **2**) to increase service control integrity verification as depicted by service measure. The modem service measure can be included in protected execution partition that can only be accessed by the service controller **122** by way of the modem local channel **330**, or the modem service measure can only be accessed by another DAS agent **310** in protected execution partition **314**. In some embodiments, the modem local channel **330** is implemented as a secure channel (e.g., an encrypted communication channel between the modem service control link **130** and the host service control link **118**). As described herein, the modem driver can reside in protected service execution environment, or the modem traffic can be

encrypted within service execution environment. For example, the encryption settings can be controlled by various secure control servers.

FIG. **4** illustrates another secure execution environment **400** for device assisted services in accordance with some embodiments. In particular, FIG. **4** illustrates a direct stack manipulation option performed by the DAS agents executed in the protected DAS execution partition **414**, including, as shown, an app(lication) identify agent **420**, an access control integrity agent **422**, a policy control agent **424**, a policy implementation agent **426**, a service measure/service monitoring agent **428**, a modem encryption agent **430**, and a bus driver **432**. For example, the policy implementation agent **426** performs access control and/or traffic shaping according a set of service control policies. The service control policies, for example, can be set by the service controller **122** or by the service controller **122** in coordination with the policy control agent **422**. As shown the app identify agent **420** is in communication with the various applications **106**A through **106**C executed in the application execution partition **402**. As also shown, the various applications **106**A through **106**C executed in the application execution partition **402** are in communication with the OS stack and/or stack API(s) **408** executed in the kernel execution partition **412**.

In some embodiments, the protected service measure agent **428**, the modem encryption agent **430**, the modem driver agent **432**, the application identifier agent **420**, the access control integrity agent **422**, and the policy control agent **424** are all implemented in protected DAS partition **414**, as shown. In some embodiments, as will now be apparent to one of ordinary skill in the art, a subset of these functions can be implemented in a protected execution partition, such as the protected DAS partition, in various circumstances.

FIG. **4** also similarly shows various embodiments that are available for network based service usage measures and interfacing to the mediation and billing systems, and it should be understood that any or all of the embodiments and figures can be employed in the context of carrier networks, MVNOs, private networks, or open networks supporting enterprise IT manger controls, parental controls, multi-network controls, and/or roaming controls.

FIG. **5** illustrates another secure execution environment **500** for device assisted services in accordance with some embodiments. In particular, FIG. **5** is similar to that FIG. **4** except that FIG. **5** illustrates a modem service control link **132** that is connected directly to the service controller **122** via the network service control link **152** (e.g., via a modem secure channel). In some embodiments, a modem control link for DAS is established locally on the device or through an entirely different control channel, which, in some embodiments, provides enhanced security as discussed herein (e.g., it is very difficult to hack a service usage measure or service control that cannot be accessed on the device).

FIG. **6** illustrates another secure execution environment **600** for device assisted services in accordance with some embodiments. In particular, FIG. **6** illustrates a policy implementation agent **616** that includes the entire networking stack running in protected execution partition **614** and an OS stack API **608** that includes an application identifying function **620** in the kernel execution partition **612**.

FIG. **7** illustrates another secure execution environment **700** for device assisted services in accordance with some embodiments. In particular, FIG. **7** illustrates DAS agents that do not replace the OS network stack elements, but instead one or more DAS agents are comprised of device driver programs that interface into the network stack and pass traffic information or actual traffic back and forth with the stack. These device driver interface constructs are labeled OS driver framework and interface **722** in FIG. **7** as similarly shown in and described with respect to FIG. **2**, along with OS stack API **708**, which includes application identifier function **720** as similarly discussed above with respect to FIG. **6**, and are executed in kernel execution partition **712**. Also, as shown, application partition DAS agents **104** are executed in application execution partition **702**. The main difference between the embodiment in FIG. **7** and that shown in and described with respect to FIG. **2** is that the service measure agent **428**, modem encryption agent **430**, and modem driver agent **432** are executed in the protected DAS partition **714**, as shown in FIG. **7**. For example, this provides for enhanced service control security as described herein with respect to various embodiments.

FIG. **8** illustrates another secure execution environment **800** for device assisted services in accordance with some embodiments. In particular, FIG. **8** illustrates a more simplified embodiment that is similar to that of FIG. **7**. In FIG. **8**, only an access control integrity agent **422** and a service measure **428** are executed in protected DAS partition **814**, and the bus driver **432** and the service measurement and/or policy control drivers **210** are executed in the kernel execution partition **712**. This embodiment illustrates that provided that at least one protected service measure is provided on the device, then the DAS service control integrity can be very high. For example, if it is not possible to access the program code or control traffic for the service measure agent **428**, and the host service control link **118** except through the encrypted control channel from the service controller **122**, then this simplified configuration can be almost as secure as that possible with network based service measures. It will now be apparent to one of ordinary skill in the art that this technique similarly applies to a service measure and control link similarly implemented in a protected modem execution partition **324**. In some embodiments, the access control integrity agent **422** provides additional security, for example, in the event that the protected DAS partition **814** is breached or compromised.

FIG. **9** illustrates another secure execution environment **900** for device assisted services in accordance with some embodiments. In particular, FIG. **9** illustrates an embodiment similar to that of FIG. **8** except that, in particular, in addition to the service measure being executed in protected DAS partition **914**, the modem encryption agent **430** is also implemented in/executed in the protected DAS partition **914**. For example, this prevents unauthorized software from defeating the service measurements and/or service controls by going around the network stack directly to the modem.

FIG. **10** illustrates another secure execution environment **1000** for device assisted services in accordance with some embodiments. In particular, FIG. **10** illustrates an embodiment similar to that of FIG. **9** except that, in particular, there are additional app partition DAS agents **104** executing in the application execution partition **702**. For example, this illustrates that some DAS agents can be implemented in application space (e.g., UI agent, policy control agent, and various other DAS agents as described herein) while still maintaining a high level of service measurement and/or control security as long as there are a few key measures and/or controls implemented in protected execution partitions using the various techniques described herein.

FIG. **11** illustrates another secure execution environment **1100** for device assisted services in accordance with some embodiments. In particular, FIG. **11** illustrates how the server cloud can be assisted by the on board access control integrity agent to detect tampering with other service measurement(s) and/or control agent(s), or to protect the service measurement

and/or control system from being attacked by malware and/or otherwise comprised. As shown, the access control integrity agent **422** executes inside the protected DAS partition **1114** and is in communication with file storage **1130** (e.g., for persistently maintaining device status and/or other settings or status or monitoring information). The access control integrity agent **422** performs the various access control integrity check functions as, for example, described herein with respect to various embodiments, and, in some embodiments, in coordination with the servers over the secure control channel (e.g., host secure channel **150**). In some embodiments, the access control integrity agent **422** can send the service controller **122** information about the other service measurements and/or control agents so that the service controller **122** can determine if the agents are working properly or have been tampered with or otherwise compromised. For example, such information can include sections of code, hashes, code segments, code variations from a previous image, code variations from a historical image, responses to queries, checksums, observations of operating behavior or patterns, service usage, policy implementation behavior, and/or other information that may be indicative of tampering, corruption, and/or a compromise of any of the device agents/measures. In some embodiments, the access control integrity agent **422** checks the operating environment for signs of malware signatures, or sends application and/or driver information or other information about the operating environments to the servers for further processing to detect malware. In some embodiments, the access control integrity agent **422** performs basic operations on protected DAS partition memory, kernel execution partition memory areas, application execution partition memory areas, on disk storage areas or on other file storage areas to detect known malware hashes or signatures, etc., or the access control integrity agent **422** can send the hashes to the servers for comparison against malware databases (e.g., to compare against signatures for known malware or for further behavioral based or other security/malware detection techniques).

In some embodiments, the DAS system is implemented in a manner that is robust to losses in service control link (e.g., coverage outages on a WWAN link or loss of connection on a wired link). In some embodiments, the DAS system to be implemented in a manner that is robust to one or more server elements in the service controller going offline or failing for any reason. The following embodiments facilitate these techniques, as described below.

In some embodiments, it is advantageous for one or more of the device assisted service agents to maintain a record of the service usage reports and/or other reporting that is provided to the service controller regarding device service control state (e.g., present service plan settings, current service usage policy settings, current user preference settings, current DAS settings, current encrypted control channel and/or local encrypted communication channel key information, current DAS agent status reports, current DAS agent security state reports, current ambient service usage and/or transaction records, current service control integrity threat reports, user status information, device status information, application status information, device location, device QOS state, and/or other state and/or settings information). In addition to such information that exists on the device and is reported to the service controller, additional service information can be derived and recorded in the service controller, such as information received from outside the device and/or analysis of the device reported information (e.g., network based service usage measures, analysis of device service usage, comparison of device reports with other information, analysis of access control integrity agent reports, information received from roaming networks, information input to the service controller from parental control terminals, enterprise control terminals, virtual service provider control terminals, access network authorization information, service integrity violation level, and many other types of information used to properly measure and/or control the device services). For example, the information reported from the device and received or derived outside the device that is required to adequately define the actions needed from the service controller to maintain proper DAS system operation is sometimes referred to herein as the "device service state."

In some embodiments, the service controller functions are highly scalable and can be executed on a number of hardware and software platforms (e.g., different virtual machines in a server, different servers in a data center, or different servers located in different data centers). For example, in such embodiments the service controller can be designed so that the programs that execute the various service controller server functions can derive all of the information necessary to properly manage the device at any moment in time by knowing past device service state and current service state that adequately define the next set of actions the service controller needs to implement to properly maintain the DAS system operation. By designing the system in this way, if the server that is running the service controller server functions for any given device in question were to go down or become disconnected from the device, then another server could later resume proper operation of the DAS system by assigning another service controller server function to the device and recovering or restoring the necessary past device service state and the necessary current device service state.

For example, this can be accomplished in some embodiments as described below. The service controller saves the current device service state into a common database (e.g., which can be centralized or distributed) that is available to all service controller server functions. The device service state is saved each time the device communicates with the service controller, or at regular time intervals, or a combination of both. The device retains its current and past service state reports even after they are reported at least until the service controller sends the device a message confirming that the service controller has saved a given device service state. Once the device receives this save confirmation for a given device state report then it is no longer required to retain that particular device state report once the device has no further use for it. In this manner, if a service controller server function goes down then a save confirmation for one or more reported device states is not transmitted to the device by the service controller, and the device can retain that report. A server load balancer detects that a given service controller server function has gone down, looks up the devices that were being controlled by that service controller server function, finds that the device in question was one of those devices and re-assigns a new service controller server function (either in the same data center or in another data center) to control the device in question. The newly assigned service controller server function then recovers all past device states that were recorded in the service controller database and are required to properly manage the DAS system, and then asks the device to transmit or re-transmit all device state reports that were not saved in the service controller database. Once the device transmits or re-transmits the requested information, the newly assigned service controller function then has the information it needs to properly manage the DAS system, it saves all the reported device state information, and then sends save confirmations to the device so that the device need no longer retain the older service state reports. The newly assigned service controller

server function can then resume the DAS system operation with a set of actions that are identical or very similar to the actions that would have been taken by the original service controller server function if it had not gone down. One of ordinary skill in the art will now appreciate that the above techniques can also be used to accommodate temporary losses in the connection between the device and the service controller. For example, such techniques provide for a highly scalable and robust approach to implement a distributed service controller across multiple data centers for reliable service redundancy. In some embodiments, the past device service state information is saved in the protected DAS execution partition and/or the modem execution partition, for example, so that it is protected from corruption.

Although the foregoing embodiments have been described in some detail for purposes of clarity of understanding, the invention is not limited to the details provided. There are many alternative ways of implementing the invention. The disclosed embodiments are illustrative and not restrictive.

What is claimed is:

1. A method comprising:

receiving, over a service control link, a report from a wireless end-user device, the report comprising information about a device service state;

determining, based on the report, that a particular service policy setting of the wireless end-user device needs to be modified, the particular service policy setting being stored in a protected partition of the wireless end-user device, the protected partition configured to deter or prevent unauthorized modifications to the particular service policy setting, the particular service policy setting being associated with a service profile that provides for access by the wireless end-user device to a network data service over a wireless access network, the particular service policy setting configured to assist in controlling one or more communications associated with the wireless end-user device over the wireless access network; and

is in response to determining that the particular service policy setting needs to be modified, sending configuration information to the wireless end-user device over the service control link, the configuration information configured to assist in modifying or allowing modifications to the particular service policy setting.

2. The method of claim **1**, wherein the particular service policy setting assists in implementing a roaming control, a parental control, or an enterprise wireless wide-area network (WWAN) management control.

3. The method of claim **1**, wherein the wireless end-user device is an intermediate networking device for forwarding traffic between a wireless wide-area network (WWAN) and a wireless local-area network (WLAN).

4. The method of claim **1**, wherein the wireless end-user device is an intermediate networking device comprising a cellular device, the intermediate networking device for forwarding traffic between the wireless access network and a second network.

5. The method of claim **1**, wherein the wireless end-user device is an intermediate networking device, and the particular service policy setting assists one or more other end-user devices in communicating over the wireless access network via the intermediate networking device.

6. The method of claim **1**, further comprising:

obtaining a service usage measure, the service usage measure accounting for the one or more communications associated with the wireless end-user device over the wireless access network; and

based on the service usage measure, taking an action.

7. The method of claim **6**, wherein the service usage measure comprises a measure of a service usage activity.

8. The method of claim **6**, wherein the action is to verify the service usage measure.

9. The method of claim **6**, wherein the action is to quarantine or suspend the wireless end-user device.

10. The method of claim **6**, further comprising obtaining secondary information associated with the wireless end-user device, and wherein the action is to verify the service usage measure using the secondary information.

11. The method of claim **1**, further comprising receiving, from the wireless end-user device, an integrity report configured to assist a network element in identifying an access control integrity violation.

12. The method of claim **1**, wherein the configuration information comprises at least a portion of the service profile.

13. The method of claim **1**, wherein the service control link is secured by an encryption protocol.

14. The method of claim **1**, wherein the device service state comprises a service profile setting, a service usage policy setting, or a device-assisted services (DAS) setting.

15. The method of claim **1**, wherein the device service state provides information about a user preference.

16. The method of claim **1**, wherein the device service state comprises information associated with an encryption key.

17. The method of claim **1**, wherein the device service state comprises an agent report, a service usage record, a transaction record, or an integrity report.

18. The method of claim **1**, wherein the device service state comprises user status information, device status information, application status information, a device location, or a device quality-of-service (QOS) state.

* * * * *