SCORE Placeholder Sheet for IFW Content

Application Number: 15830549 Document Date: 12/04/2017

The presence of this form in the IFW record indicates that the following document type was received in electronic format on the date identified above. This content is stored in the SCORE database.

Since this was an electronic submission, there is no physical artifact folder, no artifact folder is recorded in PALM, and no paper documents or physical media exist. The TIFF images in the IFW record were created from the original documents that are stored in SCORE.

- Drawing

At the time of document entry (noted above):

- USPTO employees may access SCORE content via eDAN using the Supplemental Content tab, or via the SCORE web page.
- External customers may access SCORE content via PAIR using the Supplemental Content tab.

ABSTRACT

Systems and methods for predicting user interaction with vehicles. A computing device receives an image and a video segment of a road scene, the first at least one of an image and a video segment being taken from a perspective of a participant in the road scene and then generates stimulus data based on the image and the video segment. Stimulus data is transmitted to a user interface and response data is received, which includes at least one of an action and a likelihood of the action corresponding to another participant in the road scene. The computing device aggregates a subset of the plurality of response data to form statistical data and a model is created based on the statistical data. The model is applied to another image or video segment and a prediction of user behavior in the another image or video segment is generated.

CLAIMS

1. A computerized method of predicting user interaction with vehicles enabling motorists, cyclists, and pedestrians to anticipate the actions of other motorists, cyclists, and pedestrians, the computerized method comprising:

receiving, by a computing device, a first at least one of an image and a video segment of a road scene, the first at least one of an image and a video segment being taken from a perspective of a participant in the road scene, the first at least one of an image and a video segment including at least one of a pedestrian, a cyclist, and a motor vehicle;

generating, by the computing device, stimulus data based on the first at least one of the image and the video segment, the stimulus data comprising at least one of:

the first at least one of the image and the video segment, and

an altered version of the first at least one of the image and the video segment;

transmitting, by the computing device, the stimulus data to a user interface;

receiving, by the computing device, a plurality of response data from the user interface, the response data including user inputted data by associated with the stimulus data, the user inputted data including at least one of an action and a likelihood of the action corresponding to at least one of the pedestrian, the cyclist, and the motor vehicle associated with the road scene;

aggregating, by the computing device, a subset of the plurality of response data corresponding to one of the first at least one of the image and the video segment to form statistical data;

creating, by the computing device, a model based on the statistical data;

applying, by the computing device, the model to a second at least one image or video segment; and

generating, by the computing device, a prediction of user behavior in the second at least one image or video segment based on the application of the model to the second at least one image or video segment.

2. The computerized method of claim 1, wherein creating the model further comprises training, by the computing device, a supervised learning algorithm, the supervised learning algorithm including at least one of a random forest regressor, a support vector regressor, a simple neural network, a deep convolutional neural network, a recurrent neural network, and a long-short-term memory (LSTM) neural network.

3. The computerized method of claim 1, wherein generating the stimulus data further comprises:

manipulating at least one of pixel data or array data associated with the first at least one of the image and the video segment; and

creating a manipulated data file including the manipulated at least one of pixel data or array data associated with the first at least one of the image and the video segment.

4. The computerized method of claim 3, wherein the manipulated data file includes a looped version of extracted frames from the first at least one of the image and the video segment.

5. The computerized method of claim 1, wherein:

the action includes one of the at least one of the pedestrian, the cyclist, and the motor vehicle staying in place, changing lanes, and crossing a street; and

the likelihood of the action includes an ordinal value associated with a probability of the action.

6. The computerized method of claim 1, wherein the statistical data is associated with a parameter of the subset of the plurality of response data, the parameter including at least one of a content of a response, a time associated with entering a response, and a position of an eye of a human observer associated with the response, the position being measured with respect to a display associated with the user interface.

7. The computerized method of claim 6, wherein the parameter is further associated with at least one of a central tendency, a variance, a skew, a kurtosis, a scale, and a histogram.

8. The computerized method of claim 1, wherein the second at least one image or video segment is associated with a live road scene.

9. The computerized method of claim 8, further comprising receiving, by the computing device, the second at least one image or video segment from another computing device associated with a vehicle participating in the live road scene.

10. The computerized method of claim 1, wherein the second at least one image or video segment is the same as the first at least one image or video segment, the method further comprising:

comparing, by the computing device, the prediction of user behavior with the statistical data to generate an error signal; and

adjusting, by the computing device, at least one weight associated with the model based on the error signal.

11. A computing system for predicting user interaction with vehicles enabling motorists, cyclists, and pedestrians to anticipate the actions of other motorists, cyclists, and pedestrians, the computing system comprising a memory containing instructions for execution by a processor, the processor configured to:

receive a first at least one of an image and a video segment of a road scene, the first at least one of an image and a video segment being taken from a perspective of a participant in the road scene, the first at least one of an image and a video segment including at least one of a pedestrian, a cyclist, and a motor vehicle;

generate stimulus data based on the first at least one of the image and the video segment, the stimulus data comprising at least one of:

the first at least one of the image and the video segment, and

an altered version of the first at least one of the image and the video segment;

transmit the stimulus data to a user interface;

receive a plurality of response data from the user interface, the response data including user inputted data by associated with the stimulus data, the user inputted data including at least one of an action and a likelihood of the action corresponding to at least one of the pedestrian, the cyclist, and the motor vehicle associated with the road scene;

aggregate a subset of the plurality of response data corresponding to one of the first at least one of the image and the video segment to form statistical data;

create a model based on the statistical data;

apply the model to a second at least one image or video segment; and

generate a prediction of user behavior in the second at least one image or video segment based on the application of the model to the second at least one image or video segment.

12. The computing system of claim 11, wherein to create the model the processor is further configured to train a supervised learning algorithm, the supervised learning algorithm including at least one of a random forest regressor, a support vector regressor, a simple neural network, a deep convolutional neural network, a recurrent neural network, and a long-short-term memory (LSTM) neural network.

13. The computing system of claim 11, wherein to generate the stimulus data, the processor is further configured to:

manipulate at least one of pixel data or array data associated with the first at least one of the image and the video segment; and

create a manipulated data file including the manipulated at least one of pixel data or array data associated with the first at least one of the image and the video segment.

14. The computing system of claim 11, wherein the manipulated data file includes a looped version of extracted frames from the first at least one of the image and the video segment.

15. The computing system of claim 11, wherein:

the action includes one of the at least one of the pedestrian, the cyclist, and the motor vehicle staying in place, changing lanes, and crossing a street; and

the likelihood of the action includes an ordinal value associated with a probability of the action.

16. The computing system of claim 11, wherein the statistical data is associated with a parameter of the subset of the plurality of response data, the parameter including at least one of a content of a response, a time associated with entering a response, and a position of an eye of a human observer associated with the response, the position being measured with respect to a display associated with the user interface.

17. The computing system of claim 16, wherein the parameter is further associated with at least one of a central tendency, a variance, a skew, a kurtosis, a scale, and a histogram.

18. The computing system of claim 11, wherein the second at least one image or video segment is associated with a live road scene.

19. The computing system of claim 18, wherein the processor is further configured to receive the second at least one image or video segment from a computing device associated with a vehicle participating in the live road scene.

20. The computing system of claim 11, wherein the second at least one image or video segment is the same as the first at least one image or video segment, and wherein the processor is further configured to:

compare the prediction of user behavior with the statistical data to generate an error signal; and

adjust at least one weight associated with the model based on the error signal.

SYSTEM AND METHOD OF PREDICTING HUMAN INTERACTION WITH VEHICLES

CROSS REFERENCE TO RELATED APPLICATIONS

[0001] This application claims priority under 35 U.S.C. § 119(e) to U.S. Provisional Application No. 62/528,771, filed July 5, 2017, the contents of which are incorporated herein.

TECHNICAL FIELD

[0002] The present disclosure relates generally to data analytics, and in particular, to predicting human interaction with vehicles.

BACKGROUND

[0003] The ability a driver of a car to look at a person—who is walking, driving another car, or riding a bike on or near a street—and predict what that person wants to do may be the single most important part of urban driving. For example, when a driver of a car sees people near the car, determining whether one person will cross the street, whether another person will remain standing on a street corner, and whether yet another person will change lanes on his or her bicycle is necessary to safely drive the car and avoid hitting the people. This ability is so fundamental, that operating in cities without it would be nearly impossible.

[0004] Fortunately, human drivers have such a natural ability to predict a person's behavior. In fact, they can do it so effortlessly, that they often do not even notice that they are doing it. However, computers and autonomous driving vehicles cannot adequately predict the behavior of people, especially in urban environments.

[0005] For example, autonomous driving vehicles may rely on methods that make decisions on how to control the vehicles by predicting "motion vectors" of people near the vehicles. This is accomplished by collecting data of a person's current and past movements, determining a motion vector of the person at a current time based on these movements, and extrapolating a future motion vector representing the person's predicted motion at a future time based on the current motion vector. However, the methods do not predict a person's actions or movements based on other observations besides his or her current and past movements, which lead to inferior results in predicting the person's future behavior.

SUMMARY OF THE INVENTION

[0006] Systems and methods for predicting user interaction with vehicles enabling motorists, cyclists, and pedestrians to anticipate the actions of other motorists, cyclists, and pedestrians. In some embodiments, a computing device receives a first at least one of an image and a video segment of a road scene, the first at least one of an image and a video segment being taken from a perspective of a participant in the road scene, the first at least one of an image and a video segment including at least one of a pedestrian, a cyclist, and a motor vehicle. In some embodiments, the computing device generates stimulus data based on the first at least one of the image and the video segment, the stimulus data comprising at least one of the first at least one of the image and the video segment, and an altered version of the first at least one of the image and the video segment. In some embodiments, the computing device transmits the stimulus data to a user interface. In some embodiments, the computing device receives a plurality of response data from the user interface, the response data including user inputted data by associated with the stimulus data, the user inputted data including at least one of an action and a likelihood of the action corresponding to at least one of the pedestrian, the cyclist, and the motor vehicle associated with the road scene. In some embodiments, the computing device aggregates a subset of the plurality of response data corresponding to one of the first at least one of the image and the video segment to form statistical data. In some embodiments, the computing device creates a model based on the statistical data and applies the model to a second at least one image or video segment. In some embodiments, the computing device generates a prediction of user behavior in the second at least one image or video segment based on the application of the model to the second at least one image or video segment.

[0007] In some embodiments, creating the model further comprises training a supervised learning algorithm, the supervised learning algorithm including at least one of a random forest regressor, a support vector regressor, a simple neural network, a deep convolutional neural network, a recurrent neural network, and a long-short-term memory (LSTM) neural network. In some embodiments, generating the stimulus data further comprises manipulating at least one of pixel data or array data associated with the first at least one of the image and the video segment and creating a manipulated data file including the manipulated at least one of pixel data or array data associated with the first at least one of the image and the video segment. In some

embodiments, the manipulated data file includes a looped version of extracted frames from the first at least one of the image and the video segment. In some embodiments, the action includes one of the at least one of the pedestrian, the cyclist, and the motor vehicle staying in place, changing lanes, and crossing a street, and the likelihood of the action includes an ordinal value associated with a probability of the action. In some embodiments, the statistical data is associated with a parameter of the subset of the plurality of response data, the parameter including at least one of a content of a response, a time associated with entering a response, and a position of an eye of a human observer associated with the response, the position being measured with respect to a display associated with the user interface. the parameter is further associated with at least one of a central tendency, a variance, a skew, a kurtosis, a scale, and a histogram. In some embodiments, the second at least one image or video segment is associated with a live road scene. In some embodiments, the computing device further comprises receiving the second at least one image or video segment from another computing device associated with a vehicle participating in the live road scene. In some embodiments, the second at least one image or video segment is the same as the first at least one image or video segment and the computing device further compares the prediction of user behavior with the statistical data to generate an error signal and adjusts at least one weight associated with the model based on the error signal.

[0008] These and other capabilities of the disclosed subject matter will be more fully understood after a review of the following figures, detailed description, and claims. It is to be understood that the phraseology and terminology employed herein are for the purpose of setting forth illustrative examples of the invention, and the description should not be regarded as limiting.

BRIEF DESCRIPTION OF FIGURES

[0009] Various objectives, features, and advantages of the disclosed subject matter can be more fully appreciated with reference to the following detailed description of the disclosed subject matter when considered in connection with the following drawings, in which like reference numerals identify like elements.

[0010] FIG. 1 is a system diagram of a networked system for predicting human behavior according to some embodiments of the present disclosure.

[0011] FIG. 2A is a flow chart showing a process of predicting human behavior, according to some embodiments of the present disclosure.

[0012] FIG. 2B shows an example of a derived stimulus, according to some embodiments of the present disclosure.

[0013] FIG. 3 is a system diagram showing a sensor system associated with a vehicle, according to some embodiments of the present disclosure.

[0014] FIG. 4 shows a process of generating derived stimuli from raw camera or sensor data in the vehicle, according to some embodiments of the present disclosure.

[0015] FIG. 5 is a flowchart showing a process of collecting predictions and other information from human observers based on derived stimuli, according to some embodiments of the present disclosure.

[0016] FIG. 6 shows a data structure associated with tracking video frame data, according to some embodiments of the present disclosure.

[0017] FIG. 7 is a flowchart showing a process for producing summary statistics of a video frame or derived stimulus according to some embodiments of the present disclosure.

[0018] FIG. 8 is a flowchart showing a process of training a learning algorithm using summary statistics, according to some embodiments of the present disclosure.

[0019] FIG 9. is a flowchart showing a process of predicting the state of mind of road users using a trained learning algorithm, according to some embodiments of the present disclosure.

[0020] FIG. 10 is a diagram showing an example of an application of a context user prediction process in an automobile context, according to some embodiments of the present disclosure.

DETAILED DESCRIPTION

[0021] Systems and methods are described for judging the behavior of people near a vehicle in a way that more closely resembles how human drivers would judge the behavior. For

example, in one embodiment, a group of users (or human observers) view sample images of people (such as pedestrians) near streets and/or vehicles and indicate or are measured for their understanding of how they believe the people will behave. These indicators or measurements are then used as a component for training an algorithm that predicts how people will behave in a real-world context. In other words, after being trained based on the reactions of human observers to sample images in a training environment, the algorithm is able predict actual pedestrian behavior in a real-world environment.

[0022] In a further implementation, human observers are presented with small samples of video data that have been modified to focus the observers on aspects of the samples most likely to be relevant to predicting pedestrian or other driver behavior, and to eliminate aspects which are not relevant to prediction such behavior. Large sets of observers are asked to score the samples of video data on a continuum, and the scored samples are collected. The overall collection of scores on the continuum comprises a distribution of "scores." The parameters of this distribution are then used to construct a target for the learning model of an algorithm for subsequently predicting pedestrian or driver behavior in a real-world environment.

[0023] FIG. 1 is a system diagram of a networked system for predicting human behavior according to some embodiments of the present disclosure. FIG. 1 shows a vehicle 102, a network 104, a server 106, a user response database 110, a user terminal 108, a model training system 112 and a prediction engine 114.

[0024] The vehicle 102 can be any type of manual or motorized vehicle such as a car, bus, train, scooter, or bicycle. As described in more detail below, the vehicle 102 can include sensors for monitoring the environment surrounding the vehicle. In one implementation, the sensors can include a camera affixed to any portion of the vehicle for capturing a video of people near the vehicle.

[0025] The network 104 can be any wired and/or wireless network capable of receiving sensor data collected by the vehicle 102 and distributing it to the server 106, the model training system 112, and, through the model training system 112, the prediction engine 114.

[0026] The server 106 can be any type of computer system capable of (1) hosting information (such as image, video and text information) and delivering it to a user terminal (such as user terminal 108), (2) recording responses of multiple users (or human observers) to the

information, and (3) delivering such information and accompanying responses (such as responses input via user terminal 108) back to the network 104.

[0027] The user response database 110 can be any type of database or data storage system capable of storing the image, video, and text information and associated user responses and subsequently recalling them in response to a query.

[0028] The model training system 112 can be implemented in any type of computing system. In one embodiment, the system 112 receives the image, video, and/or text information and accompanying, or linked, user responses from the database 110 over the network 104. In some embodiments, the text segments are discrete values or free text responses. The model training system 112 can use images, video segments and text segments as training examples to train an algorithm, and can create labels from the accompanying user responses based on the trained algorithm. These labels indicate how the algorithm predicts the behavior of the people in the associated image, video, and/or text segments. After the labels are created, the model training system 112 can transmit them to the prediction engine 144.

[0029] The prediction engine 114 can be implemented in any computing system. In an illustrative example, the engine 114 includes an algorithm that has been trained by the model training system 112. This trained algorithm is able to estimate a label for a new (*e.g.*, an actual "real-world") image, video, and/or text segment based on the labels and associated image, video, and/or text segments that it received from the model training system 112. In some embodiments, this label comprises aggregate or summary information about the responses of a large number of users (or human observers) presented with similar image, video, or text segments while the algorithm was being trained.

[0030] FIG. 2A is a flow chart showing a process of predicting human behavior, according to some embodiments of the present disclosure. In one implementation, video or other data is captured by a camera or sensor mounted on the vehicle 102. The camera or other sensor can be mounted in a fixed or temporary manner to the vehicle 102. Of course, the camera does not need to be mounted to an automobile, and could be mounted to another type of vehicle, such as a bicycle. As the vehicle travels along various streets, the camera or sensor captures still and/or moving images (or other sensor data) of pedestrians, bicycles, automobiles, *etc.* moving or being stationary on or near the streets. In step 202, this video or other data captured by the camera or

other sensor is transmitted from the vehicle 102, over the network 104, and to the server 106 where it is stored.

[0031] Then, in step 204, video frames or segments are extracted from the stored video or other data and are used to create stimulus data including derived stimulus (or stimuli). In one implementation, the derived stimulus corresponds to a scene in which one or more humans are conducting activities (*e.g.*, standing, walking, driving, riding a bicycle, *etc.*) beside or on a street and/or near a vehicle. As explained in more detail below for example in step 214 and in the text accompanying FIG. 9, as part of the training process for the prediction algorithm, human observers view the derived stimulus and predict how they believe the humans shown in the derived stimulus will act. In yet a further implementation, after the video frames or segments are extracted from the stored data, the derived stimulus is generated by manipulating the pixels or equivalent array data acquired from the camera or other sensor in step 204, producing a new data file that conveys a portion of the information from the original video with certain aspects highlighted or obscured, as described below in FIG 4.

[0032] FIG. 2B shows an example of a derived stimulus, according to some embodiments of the present disclosure. As shown, three non-consecutive frames 220, 222, 223, and 224, are extracted from a short segment of video. A copy of the first frame is made 220. On the copy of the first frame 220, a box 221 is drawn around the figure of interest, highlighting that figure. The copy of the first frame 220 and the three extracted frames 222, 223, and 224 are then recombined into a short video segment that loops. This encourages human observers to focus on a figure of interest in the video segment.

[0033] In step 206, the derived stimulus is transmitted from the server 106 and displayed to a large number of users (or human observers) on the user terminal 108 (or multiple terminals 108). The terminal(s) 108 prompt the human observers to predict how the people shown in the derived stimulus will act, and upon viewing the displayed stimulus, the observers input their responses corresponding to their predictions. For example, in the derived stimulus shown in FIG. 2B, the human observers may predict that the bicyclist will continue riding to the left in the figure. In other derived stimuli, the responses may predict whether a first person in the stimulus will cross the street, another person will remain standing on a street corner, and yet another person will change lanes on his or her bicycle. In an illustrative embodiment, the human observers may make a continuous or ordinal judgment about the state of mind or the predicted behavior of the

people shown in the derived stimulus and record that judgment. For example, the human observers may select an appropriate icon displayed on the terminal(s) 108 by clicking a mouse or by pressing a key to indicate their judgment or prediction. The judgment or prediction may correspond to the human observers' assessment of the state of mind of the person in the derived stimulus or other awareness or intention that would be relevant to a hypothetical driver who sees the person in the derived stimulus while driving. In step 208, the derived stimulus and associated human observer responses are transmitted from the terminal(s) 108 to the server 106 and recorded in the user response database 110.

[0034] In step 210, summary statistics are generated based on the user responses. For example, the statistics may characterize the aggregate responses of multiple human observers to a particular derived stimulus. For instance, if the derived stimulus shows a pedestrian walking on a sidewalk towards an intersection, the response can be categorized in terms of how many human observers believe that the pedestrian will stop upon reaching the intersection, continue walking straight across the intersection, turn a corner and continue walking along the sidewalk without crossing the intersection, *etc.* These summary statistics can characterize the human observer responses in terms of certain parameters associated with the statistics, such as a content of a response, a time associated with entering a response, and a position of an eye of a human observer associated with the response. The parameters can also be associated with a (1) central tendency, variance, skew, kurtosis, scale, or histogram. For example, the amount of time users took to input their responses can be characterized in terms of central tendency, variance, skew, kurtosis, scale, histogram. Also, the statistics can include a parameter that additionally or alternatively characterizes the movement of the human observers' eyes relative to a display when making the judgments in terms of central tendency, variance, skew, kurtosis, scale, histogram or two-dimensional distribution. In one embodiment, the statistics are stored in the user response database 110 with an index that identifies the raw video or sensor data from which the derived stimulus was generated. In a further embodiment, the statistics stored in the database 110 cover a large set of images of people on or near roads and are categorized in a number of different categories, such as pedestrian, driver, motorcyclist, bicyclist, scooter driver, self-balancing scooter rider, unicyclist, motorized wheelchair user, skateboarder, or others. Moreover, the statistics are respectively stored along with, or linked to, the images of the derived stimuli corresponding to the statistics.

[0035] In step 212, the stored statistics and corresponding images (*e.g.*, the video frames or segments that were extracted from the video or other data (captured from the camera or sensor of the vehicle 202)) are sent over the network 104 to the model training system 112 and used to train a prediction algorithm. For example, the collection of images and statistics can be used to train a supervised learning algorithm, which can comprise a random forest regressor, a support vector regressor, a simple neural network, a deep convolutional neural network, a recurrent neural network, a long-short-term memory (LSTM) neural network with linear or nonlinear kernels that are two dimensional or three dimensional, or any other supervised learning algorithm which is able to take a collection of data labeled with continuous values and adapt its architecture in terms of weights, structure or other characteristics to minimize the deviation between its predicted label on a novel stimulus and the actual label collected on that stimulus using the same method as was used on the set of stimuli used to train that network. The model is given data which comprises some subset of the pixel data from the video frames that the summary statistics were generated from. In one implementation, this subset includes the pixel data contained in a box (such as the box 221 shown in FIG. 2B) drawn to contain the boundaries of the person, cyclist, motorist and vehicle, or other road user, including their mode of conveyance. In some other implementations, it also includes the entire pixel data from the rest of the image. In one of those implementations, that pixel data is selected according to criteria such as the salience of those features in terms of contrast, lighting, presence of edges, or color. In an additional implementation, the features can include descriptive meta-data about the images such as the dimensions and location of the bounding box, the shape of the bounding box or the change in size or position of the bounding box from one frame to the next.

[0036] In step 214, the prediction engine 114 uses the trained model from the model training system 112 to predict the actual, "real-world" or "live data" behavior of people on or near a road. In one embodiment, the prediction engine 114 receives "live data" that matches the format of the data used to train the trained model. For example, if the trained model was trained based on video data received from a camera on the vehicle 102, the "live data" that is input to the algorithm likewise is video data from the same or similar type camera. On the other hand, if the model was trained based on another type of sensor data received from another type of sensor on the vehicle 102, the "live data" that is input to the prediction engine 114 likewise is the other type of data from the same or similar sensor.

[0037] The trained model or algorithm makes a prediction of what a pedestrian or other person shown in the "live data" would do based on the summary statistics and/or training labels of one or more derived stimulus. The accuracy of the model is determined by having it make predictions of novel derived stimuli that were not part of the training images previously mentioned but which do have human ratings attached to them, such that the summary statistics on the novel images can be generated using the same method as was used to generate the summary statistics for the training data, but where the correlation between summary statistics and image data was not part of the model training process. The predictions produced by the trained model comprise a set of predictions of the state of mind of road users that can then be used to improve the performance of autonomous vehicles, robots, virtual agents, trucks, bicycles, or other systems that operate on roadways by allowing them to make judgments about the future behavior of road users based on their state of mind.

[0038] FIG. 3 is a system diagram showing a sensor system associated with a vehicle, according to some embodiments of the present disclosure. FIG. 3 shows a vehicle 306 with arrows pointing to the locations of its sensors 300, a local processor and storage 302, and remote storage 304.

[0039] Data is collected from cameras or other sensors 300 including solid state Lidar, rotating Lidar, medium range radar, or others mounted on the car in either a fixed or temporary capacity and oriented such that they capture images of the road ahead, behind, and/or to the side of the car. In some embodiments, the sensor data is recorded on a physical storage medium (not shown) such as a compact flash drive, hard drive, solid state drive or dedicated data logger. In some embodiments, the sensors 300 and storage media are managed by the processor 302.

[0040] The sensor data can be transferred from the in-car data storage medium and processor 302 to another storage medium 304 which could include cloud-based, desktop, or hosted server storage products. In some embodiments, the sensor data can be stored as video, video segments, or video frames.

[0041] In some embodiments, data in the remote storage 304 also includes database tables associated with the sensor data. When sensor data is received, a row can be added to a database table that records information about the sensor data that was recorded, including where it was recorded, by whom, on what date, how long the segment is, where the physical files can be found

either on the internet or on local storage, what the resolution of the sensor data is, what type of sensor it was recorded on, the position of the sensor, and other characteristics.

[0042] FIG. 4 shows a process of generating derived stimuli from raw camera or sensor data in the vehicle, according to some embodiments of the present disclosure.

[0043] Referring to step 400, video or data frames are selected according to a method which selects either random or specific frames from video or sensor data segments. As described above, sensor data can include video segments or specific frames. These frames can either be contiguous or non-contiguous, and can be in the original order, in a permuted order, in reverse order, or in random order. Some of the frames can be repeated once or more than once. The frames are selected so that when human observers are later presented with reordered versions of the sequences of frames, they perceive either the actual motion of humans in the scene that was captured in the original video, or motion that is a product of the ordering of the frames but which diverges via reordering from the motion that was originally captured. The temporal information that the human observers looking at the sets of images or derived stimulus are able to use to answer questions about the sets of images may be therefore limited or expanded to include specific temporal cues that were or were not in the original sequence.

[0044] Referring to step 402, some of the frames can be manipulated. The frames can be manipulated by adjusting pixel values. These manipulations can include blurring, the addition or one or more occluding bars, bands, or shapes, sharpening, the removal of color information, the manipulation of color information, the drawing of non-occluding or highlighting shapes on the image, other manipulations, or a combination of the manipulations listed here, or a combination of the manipulations listed here with other manipulations, or other manipulations of the pixels not listed combined with each other. The manipulations serve the purpose of highlighting, occluding or degrading portions of the image, so that when the images are shown to the human observers, they are directed to people or specific portions of the image when predicting what the people in the images will do. For example, using the highlighting described above, a certain pedestrian in a scene can be isolated such that a human observer's feedback can be more reliably associated with the pedestrian.

[0045] Referring to step 404, frames can be recombined to form a derived stimulus. In some embodiments, if there is only one frame that frame comprises the derived stimulus. If there is more than one frame those frames may then be recombined. The recombination into a temporal

segment can involve the frames having the same display time and interval as in the original video clip or could involve faster, slower or variable display times. The timing of the recombination is chosen in order to shape the perceived temporal duration of the activities visible in the original video segment so the judgments the observers make will rely on temporal information that is or is not identical to that featured in the original image.

[0046] FIG. 5 is a flowchart showing a process of collecting predictions and other information from human observers based on derived stimuli, according to some embodiments of the present disclosure. In step 500, human observers are given detailed instructions about how to answer questions about derived stimuli. In step 502, those observers are presented with derived stimuli and asked to answer questions about them. In step 504, the observers respond to the stimuli and those responses are recorded. In step 506, the recorded responses are aggregated and logged in a database. For example, the responses may be sent to and logged in the user response database 110 (FIG. 1).

[0047] Referring to step 500, in one example, some number of human observers (two or more) are recruited to participate on one or several crowdsourcing websites, such as Amazon's Mechanical Turk or at a physical location provided with a display. The observers are given detailed written and pictorial instructions explaining the task that they are about to complete. These instructions give examples of situations that might be depicted in the derived stimuli, and the kinds of responses that would be appropriate for those situations. For example, if human observers are asked to judge the intention of a pedestrian to walk in front of a car, the instructions may be: "In this test, we want you to pretend you're driving a car. You'll see road scenes with cyclists highlighted, and you'll have to decide what they're planning to do. Try to answer as quickly as you can. If a box contains more than one cyclist, try to judge if any of them intends to ride into the path of your car. Some of the images might be small, or dark, but just do your best."

[0048] Referring to step 502, the human observers may be shown a display which includes the derived stimulus. The display also includes a mechanism for making a judgment about the stimulus. The mechanism for making the judgment can be a continuous indicator such as a ribbon on which the observer could drag a control to a certain point. The mechanism can also be an ordinal measure such as a Likert scale where the observer can make a judgment about a degree of certainty of the judgment. The mechanism can also be a control that the human

observer drags with their mouse to draw a trajectory onscreen indicating a judgment. The mechanism can also be a text entry field where the observer types a description of their judgment. The judgment that the human observer makes is an evaluation of the state of mind of a road user depicted in the derived stimulus. The evaluation can be of the intention, awareness, personality, state of consciousness, level of tiredness, aggressiveness, enthusiasm, thoughtfulness or another characteristic of the internal mental state of the pictured road user. If the ratings collected are on an ordinal scale they can describe the characteristic using language of probability, such as "the other driver may be attentive" or "the other driver" is definitely attentive" or "the other driver is definitely not attentive". The ratings of large numbers of human observers are collected. Summary statistics are generated based on the responses of all of the observers who looked at an image. Individual variability in responses to a given stimulus can be characterized in the information given by the observers to the learning algorithm. The summary statistics might include unweighted information from all observers, or might exclude observers based on extrinsic or intrinsic criteria such as the time it took an observer to respond, the geographical location of an observer, the observer's self-reported driving experience, or the observer's reliability in making ratings of a set of other images.

[0049] Referring to step 504, the explicit response of the observer is recorded as well as implicit data. The implicit data can include how long the subject took to respond, if they hesitated in their motions, if they deleted keystrokes, if they moved the mouse anywhere other than the location corresponding to the response they eventually chose, where their eyes moved, or other implicit measures.

[0050] Referring to step 506, the responses are aggregated and recorded in a data structure, such as the user response database 110 (FIG. 1). This data structure is then sent as a text field to a networked computer system running database software and logged in a database.

[0051] FIG. 6 shows a data structure (*e.g.*, table) associated with tracking video frame data according to some embodiments of the present disclosure. Column 600 shows an example of a unique identifier for each human observer who rated an image. Column 602 shows a unique identifier for a given derived stimulus. Column 604 shows an example of a response from an observer recorded in the database. Column 606 shows an example of additional information — in this case response time — recorded by the database.

[0052] In reference to column 600, each observer who is shown the stimuli is given a unique identifier so that information about their response may be analyzed in the context of their responses to other images.

[0053] In reference to column 602, each derived stimulus that is rated by a human observer is listed with a filename and path that uniquely identifies that derived stimulus, and also indicates the original video frames from which that derived stimulus was generated.

[0054] In reference to column 604, for each stimulus rated by each human observer, a response is recorded that could be a continuous, discrete, or ordinal value. This value may refer to the probability of the pictured human road user has a given state of mind — e.g. that a pedestrian is likely to cross the street or that an oncoming vehicle is unlikely to be willing to yield to the vehicle containing the sensor if the vehicle containing the sensor needs to turn. In some embodiments, a higher ordinal value (e.g., the ordinal 4 as shown in FIG. 6) indicates that a human observer believes that there is a higher probability that the pictured human road user has a given state of mind or will perform a particular action. On the other hand, a lower ordinal value (e.g., the ordinal 1 as shown in FIG. 6) indicates that the human observer believes that there is a lower probability that the pictured human road user has the state of mind or will perform the particular action. On the other hand, in some embodiments, a lower ordinal value can indicate a higher probability of an action, and a higher ordinal value can indicate a lower probability of an action.

[0055] In reference to column 606, an amount of time associated with a subject responding to the derived stimulus is also recorded. In some embodiments, this time is associated with the overall reliability of the human observer's rating. For example, a response associated with a lower response time may be weighted higher and a response associated with a slower response time may be weighted lower.

[0056] FIG. 7 is a flowchart showing a process for producing summary statistics of a video frame or derived stimulus according to some embodiments of the present disclosure. In step 700, per-image results are extracted from the database which stores responses from a human observer. In step 702, summary statistics are calculated using those per-image results. In step 704, records of the summary statistics attached to frames from the raw car data (not the derived stimuli) are recorded in a separate table.

[0057] Records of all of the responses by human observers on a given task for a given frame are extracted from the database in step 700. In one example, all of the responses of a given type are aggregated into a single data structure.

[0058] This data structure is queried to produce summary statistics in step 702. These summary statistics could include measurements of the central tendency of the distribution of scores like the mean, median, or mode. They could include measurements of the heterogeneity of the scores like variance, standard deviation, skew, kurtosis, heteroskedasticity, multimodality, or uniformness. They could also include summary statistics like those above calculated from the implicit measurements of the responses listed above.

[0059] The calculated summary statistics are recorded in a database table in step 704 attached to a unique identifier which links them to the video frame or sensor data frame associated with the responses from which they were calculated.

[0060] FIG. 8 is a flowchart showing a process of training a learning algorithm using summary statistics, according to some embodiments of the present disclosure. For example, in one embodiment, the process may train an algorithm used in the model training system 112 in FIG. 1. In step 800, summary statistics linked to a given video or sensor frame are extracted from the database 110 in FIG. 1. Subsequently, in step 802, the video or sensor frame may be collated with the statistics label for the frame. The collated frame is provided to the learning algorithm in the model training system 112 in step 804, and this process yields a final learning algorithm in step 806.

[0061] In some embodiments, between one and three partitions are generated from the database records in step 800. These partitions each comprise a list of images in the set of images that have been manipulated to create derived stimuli and rated by human observers. At least one of these partitions is made to comprise a set of training data. An additional partition may be created to use as a set of validation data, a second list of images in the set of images that have been manipulated to create derived stimuli and rated by human images, but where the second validation set is not shown to the model in the learning phase, but is instead preserved to be used later for evaluation.

[0062] The list of images in the training data partition is collated with some or all of the summary statistics that have been generated from the human observer responses to those images

and stored in the database in step 802, such that the summary statistics are associated with the appropriate image in the list which comprises the training partition.

[0063] Each combination of image and summary statistics comprises a single training sample for the learning algorithm in step 804. The algorithm may be any type of supervised learning algorithm capable of predicting a continuous label for a two or three dimensional input, including but not limited to a random forest regressor, a support vector regressor, a simple neural network, a deep convolutional neural network, a recurrent neural network, a long-short-term memory (LSTM) neural network with linear or nonlinear kernels that are two dimensional or three dimensional.

[0064] The learning algorithm is optimized by a process of progressively adjusting the parameters of that algorithm in response to the characteristics of the images and summary statistics given to it in the training phase to minimize the error in its predictions of the summary statistics for the training images in step 804. In one embodiment of the model training system 112, the algorithm can be a deep neural network. In this embodiment the parameters are the weights attached to the connections between the artificial neurons comprising the network. Pixel data from an image in a training set collated with human observer summary statistics in step 802 can serve as an input to the network. This input can be transformed according to a mathematical function by each of the artificial neurons, and then the transformed information can be transmitted from that artificial neuron to other artificial neurons in the neural network. The transmission between the first artificial neuron and the subsequent neurons can be modified by the weight parameters discussed above. In this embodiment, the neural network can be organized hierarchically such that the value of each input pixel can be transformed by independent layers (e.g., 10 to 20 layers) of artificial neurons, where the inputs for neurons at a given layer come from the previous layer, and all of the outputs for a neuron (and their associated weight parameters) go to the subsequent layer. At the end of the sequence of layers, in this embodiment, the network can produce numbers that are intended to match the human summary statistics given at the input. The difference between the numbers that the network output and the human summary statistics provided at the input comprises an error signal. An algorithm (e.g., back-propagation) can be used to assign a small portion of the responsibility for the error to each of the weight parameters in the network. The weight parameters can then be adjusted such that their estimated contribution to the overall error is reduced. This process can

be repeated for each image (or for each combination of pixel data and human observer summary statistics) in the training set collected via step 802. At the end of this process the model is "trained", which in some embodiments, means that the difference between the summary statistics output by the neural network and the summary statistics calculated from the responses of the human observers in step 506 is minimized.

[0065] FIG 9. is a flowchart showing a process of predicting the state of mind of road users using a trained learning algorithm, according to some embodiments of the present disclosure. In step 900, the training algorithm receives a "real world" or "live data" video or sensor frame. Then in step 902, the trained algorithm analyzes the frame, thus enabling the algorithm in step 904 to output a prediction of summary statistics on the frame.

[0066] The "real world" or "live data" video or other sensor frames from a car-mounted sensor are delivered to the trained learning algorithm in step 900. These frames have the same resolution, color depth and file format as the frames used to train the algorithm. These frames are delivered as individual frames or as sequences according to the format used to train the original algorithm.

[0067] Each of these frames is analyzed by being passed through the trained model in step 902. In one embodiment, the data from the frame that was passed through the model would comprise the pixel data from a camera. This data would be transformed by an artificial neural network that had been trained according to step 804. At the final stage of the processing in the artificial network, it would produce an output. This output is the model output in step 904.

[0068] The model outputs a number or set of numbers that comprise the predicted summary statistics for the "real world" or "live data" image in step 904. The predicted summary statistics are the model's best estimation of what the summary statistics would be on the image if the image had human annotations collected. The prediction is generated automatically by passing the sensor data through the model, where the information is transformed by the internal mechanisms of the model according to the parameters that were set in the training process shown in step 804. Because these summary statistics characterize the distribution of human responses that predict the state of mind of a road user pictured in the stimulus, the predicted statistics are therefore a prediction of the aggregate judgment of human observers of the state of mind of the pictured road user and thus an indirect prediction of the actual state of mind of the road user.

[0069] FIG. 10 is a diagram showing an example of an application of a context user prediction process in an automobile context, according to some embodiments of the present disclosure. In this example intention 1006 1018 means that the road user 1002 1014 has the goal of moving into the path of the vehicle 1000 before the vehicle 1000 (on which the system is mounted) reaches their position. Awareness 1004 1016 in this example means that the road user 1002 1014 understands that the vehicle on which the system is mounted 1000 is present in their vicinity. In this example, when cyclist 1002 rides into the field of view of a camera mounted on vehicle 1000, the pixel data of the camera image of the cyclist is fed to a trained algorithm as described above in step 900. The trained algorithm analyzes the image as described above in step 902. The trained algorithm would predict summary statistics as in step 904. These summary statistics are an estimate of what the summary statistics would be for a collection of human observers who were shown a derived stimulus of the camera data as in step 504. The estimates summary statistics are therefore the system's best answer to the question "does this cyclist intend to enter the path of the vehicle." The vehicle is therefore able to make a guess 1006 about the intention of the cyclist that is closely matched to the guess that a human driver would make in that same situation. In this example, the intention of the cyclist 1006 is relatively high, as indicated by the number of horizontal bars in the display. The system installed on an automobile 1000 also makes predictions about the awareness 1004 of cyclists of the vehicle 1000, by the same method described for intention. It also makes predictions about the willingness of an automobile 1008 to yield 1010 or its desire to turn across the system-containing vehicle's path 1012 by the same method described above. In the case of the automobile the questions that human subjects answered that would be predicted by the algorithm are "would the vehicle be willing to yield" 1010 and "does the vehicle wish to turn across your path" 1012. It also makes predictions about the desire of pedestrians 1014 to cross in front of the vehicle 1018, and whether those pedestrians are aware of the vehicle 1016, by the same method described above.

[0070] The models described above can be implemented as a real-time module that makes predictions of road user behavior based on input from cameras or other sensors installed on a car 1000. In the case of an autonomous car, these predictions can be used to make inferences about the intent of road users such as cyclists 1002, other motorists 1008, and pedestrians 1014 to cross into the path of the car, as well as whether the road users are aware of the car and its future path.

They can also be used to predict whether other road users would be surprised, welcoming, or aggressively unwelcoming if the car were to engage in maneuvers which would take it into the path of another road user (e.g., would an oncoming car yield if the car implementing the systems and methods described herein were to turn left).

[0071] The subject matter described herein can be implemented in digital electronic circuitry, or in computer software, firmware, or hardware, including the structural means disclosed in this specification and structural equivalents thereof, or in combinations of them. The subject matter described herein can be implemented as one or more computer program products, such as one or more computer programs tangibly embodied in an information carrier (e.g., in a machine readable storage device) or in a propagated signal, for execution by, or to control the operation of, data processing apparatus (e.g., a programmable processor, a computer, or multiple computers). A computer program (also known as a program, software, software application, or code) can be written in any form of programming language, including compiled or interpreted languages, and it can be deployed in any form, including as a stand-alone program or as a module, component, subroutine, or other unit suitable for use in a computing environment. A computer program does not necessarily correspond to a file. A program can be stored in a portion of a file that holds other programs or data, in a single file dedicated to the program in question, or in multiple coordinated files (e.g., files that store one or more modules, sub programs, or portions of code). A computer program can be deployed to be executed on one computer or on multiple computers at one site or distributed across multiple sites and interconnected by a communication network.

[0072] The processes and logic flows described in this specification, including the method steps of the subject matter described herein, can be performed by one or more programmable processors executing one or more computer programs to perform functions of the subject matter described herein by operating on input data and generating output. The processes and logic flows can also be performed by, and apparatus of the subject matter described herein can be implemented as, special purpose logic circuitry, e.g., an FPGA (field programmable gate array) or an ASIC (application specific integrated circuit).

[0073] Processors suitable for the execution of a computer program include, by way of example, both general and special purpose microprocessors, and any one or more processor of any kind of digital computer. Generally, a processor will receive instructions and data from a

read only memory or a random access memory or both. The essential elements of a computer are a processor for executing instructions and one or more memory devices for storing instructions and data. Generally, a computer will also include, or be operatively coupled to receive data from or transfer data to, or both, one or more mass storage devices for storing data, e.g., magnetic, magneto optical disks, or optical disks. Information carriers suitable for embodying computer program instructions and data include all forms of nonvolatile memory, including by way of example semiconductor memory devices, (e.g., EPROM, EEPROM, and flash memory devices); magnetic disks, (e.g., internal hard disks or removable disks); magneto optical disks; and optical disks (e.g., CD and DVD disks). The processor and the memory can be supplemented by, or incorporated in, special purpose logic circuitry.

[0074] To provide for interaction with a user, the subject matter described herein can be implemented on a computer having a display device, e.g., a CRT (cathode ray tube) or LCD (liquid crystal display) monitor, for displaying information to the user and a keyboard and a pointing device, (e.g., a mouse or a trackball), by which the user can provide input to the computer. Other kinds of devices can be used to provide for interaction with a user as well. For example, feedback provided to the user can be any form of sensory feedback, (e.g., visual feedback, auditory feedback, or tactile feedback), and input from the user can be received in any form, including acoustic, speech, or tactile input.

[0075] The subject matter described herein can be implemented in a computing system that includes a back end component (e.g., a data server), a middleware component (e.g., an application server), or a front end component (e.g., a client computer having a graphical user interface or a web browser through which a user can interact with an implementation of the subject matter described herein), or any combination of such back end, middleware, and front end components. The components of the system can be interconnected by any form or medium of digital data communication, e.g., a communication network. Examples of communication networks include a local area network ("LAN") and a wide area network ("WAN"), e.g., the Internet.

[0076] It is to be understood that the disclosed subject matter is not limited in its application to the details of construction and to the arrangements of the components set forth in the following description or illustrated in the drawings. The disclosed subject matter is capable of other embodiments and of being practiced and carried out in various ways. Also, it is to be

understood that the phraseology and terminology employed herein are for the purpose of description and should not be regarded as limiting.

[0077] As such, those skilled in the art will appreciate that the conception, upon which this disclosure is based, may readily be utilized as a basis for the designing of other structures, methods, and systems for carrying out the several purposes of the disclosed subject matter. It is important, therefore, that the claims be regarded as including such equivalent constructions insofar as they do not depart from the spirit and scope of the disclosed subject matter.

[0078] Although the disclosed subject matter has been described and illustrated in the foregoing exemplary embodiments, it is understood that the present disclosure has been made only by way of example, and that numerous changes in the details of implementation of the disclosed subject matter may be made without departing from the spirit and scope of the disclosed subject matter, which is limited only by the claims which follow.

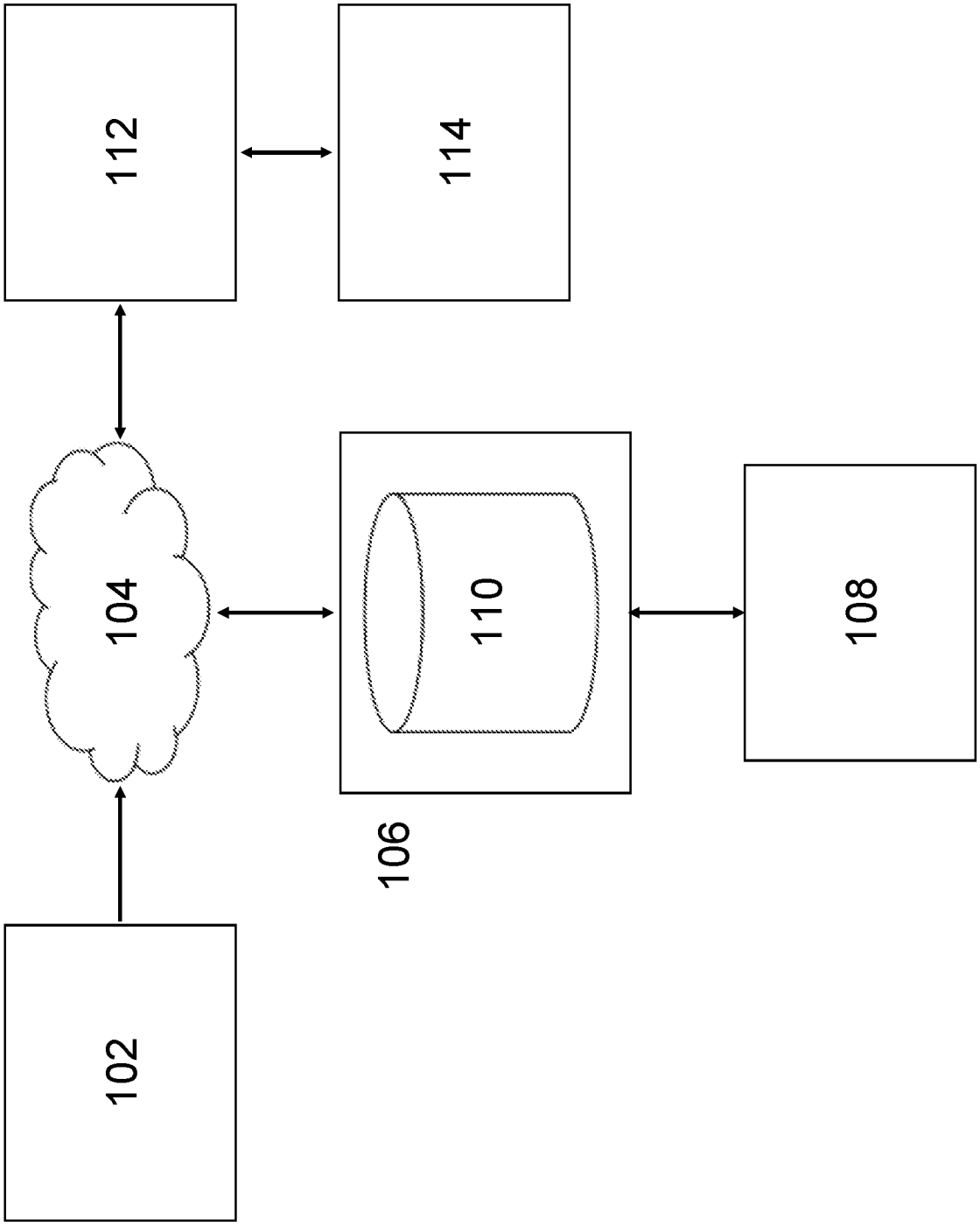

FIG. 1

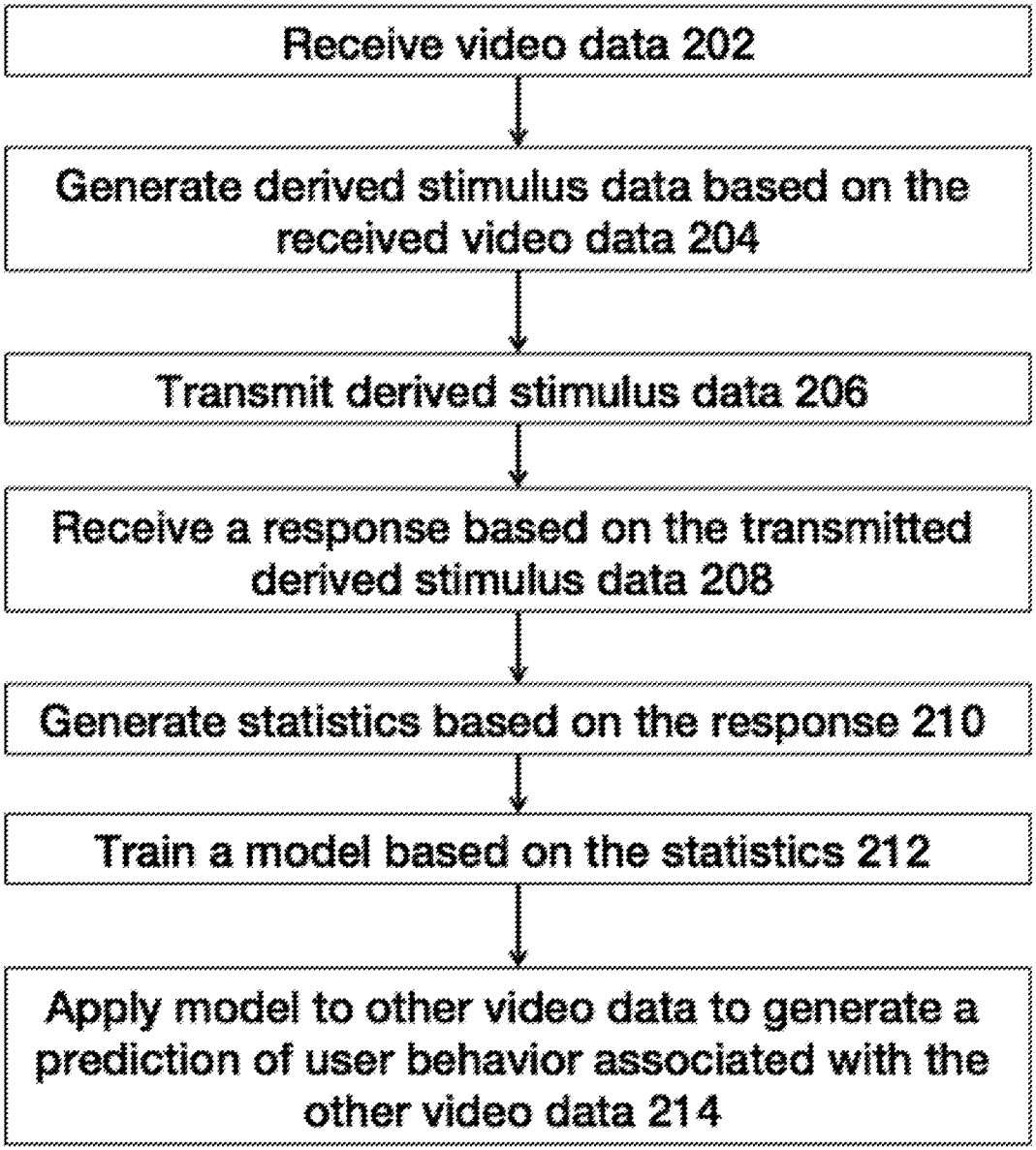
Receive video data 202
Generate derived stimulus data based on the received video data 204
Transmit derived stimulus data 206
Receive a response based on the transmitted derived stimulus data 208
Generate statistics based on the response 210
Train a model based on the statistics 212
Apply model to other video data to generate a prediction of user behavior associated with the other video data 214

FIG. 2A

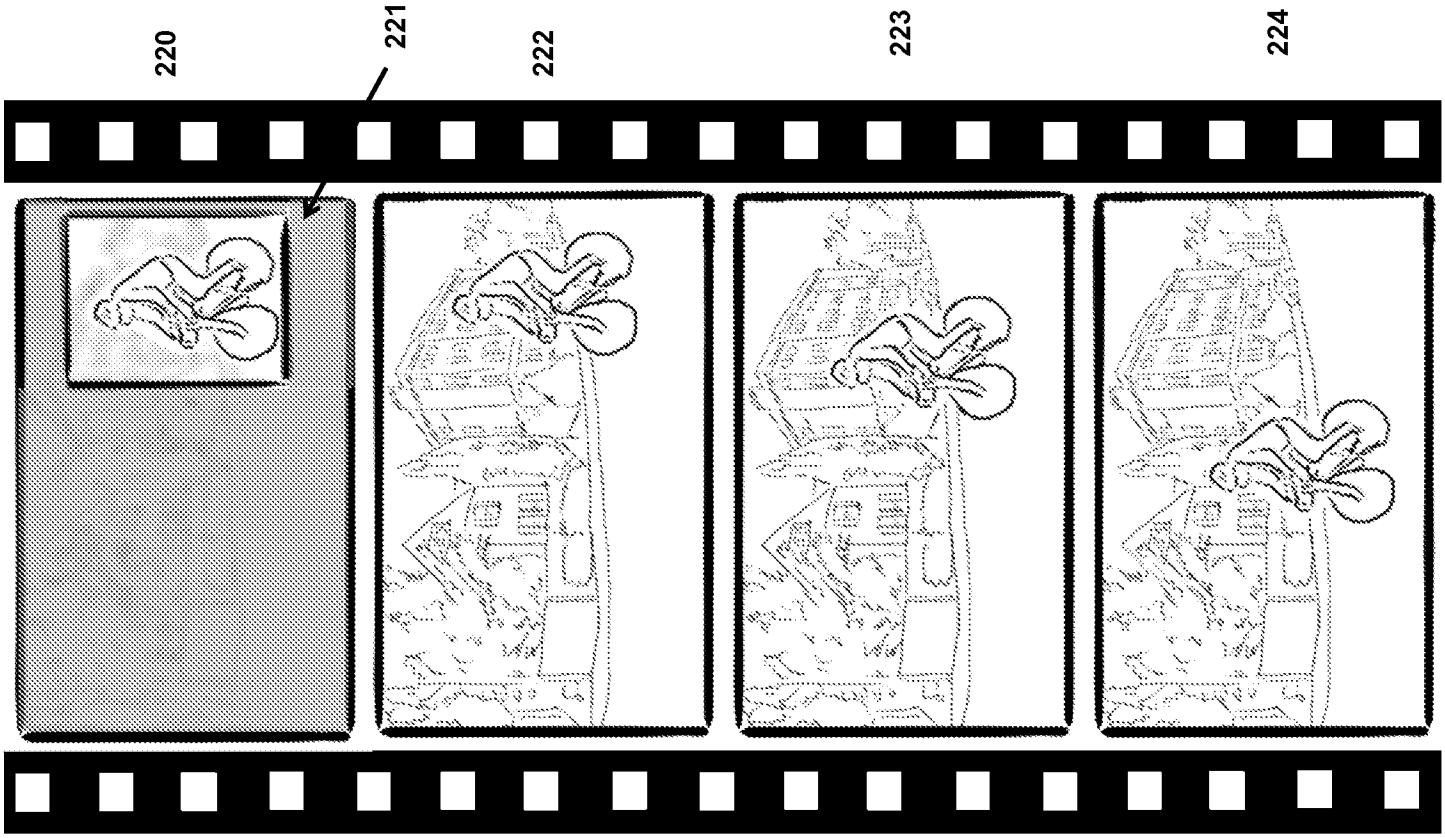

FIG. 2B

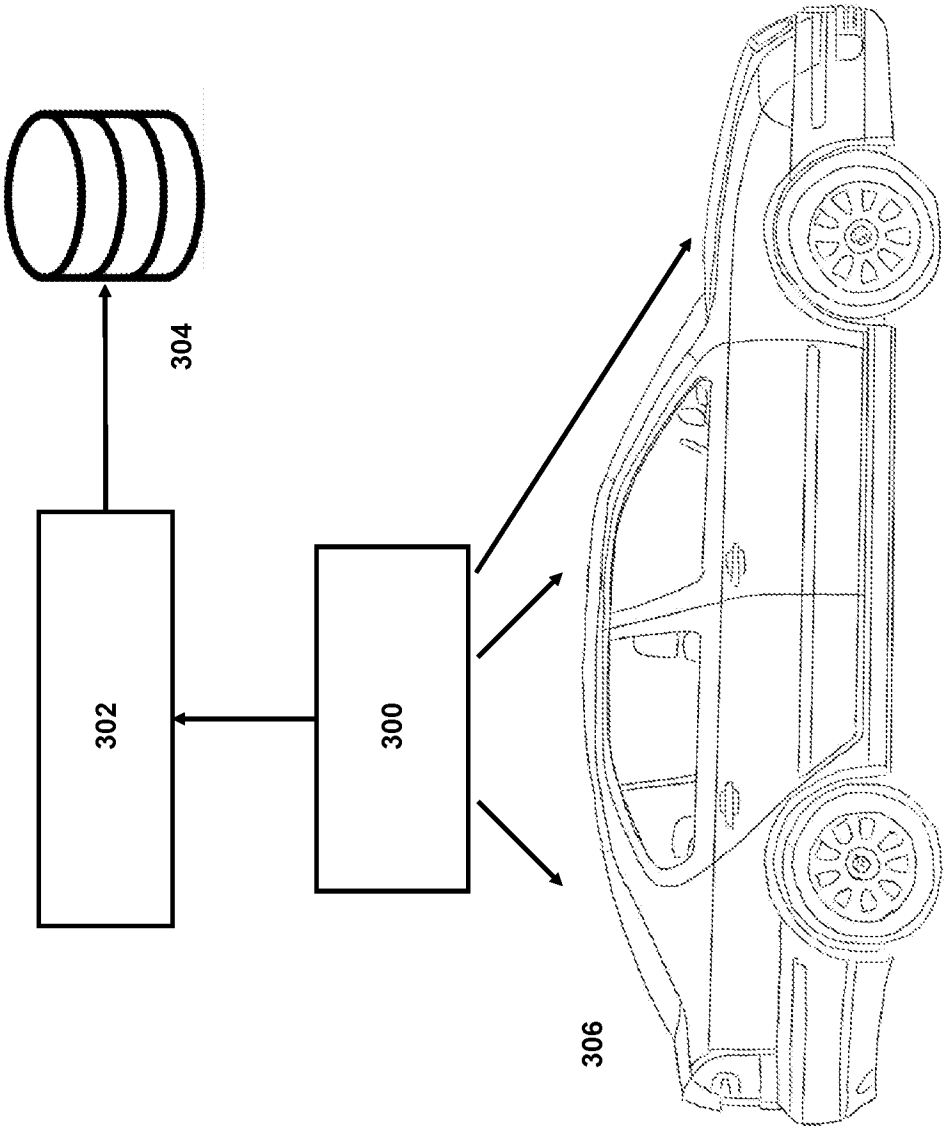

FIG. 3

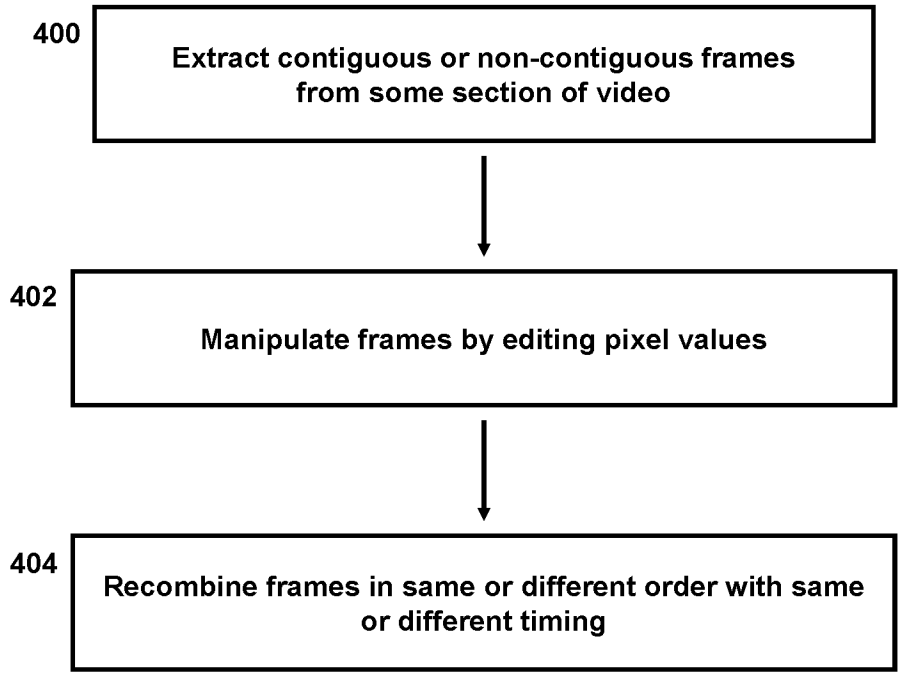
400
Extract contiguous or non-contiguous frames from some section of video
402
Manipulate frames by editing pixel values
404
Recombine frames in same or different order with same or different timing

FIG. 4

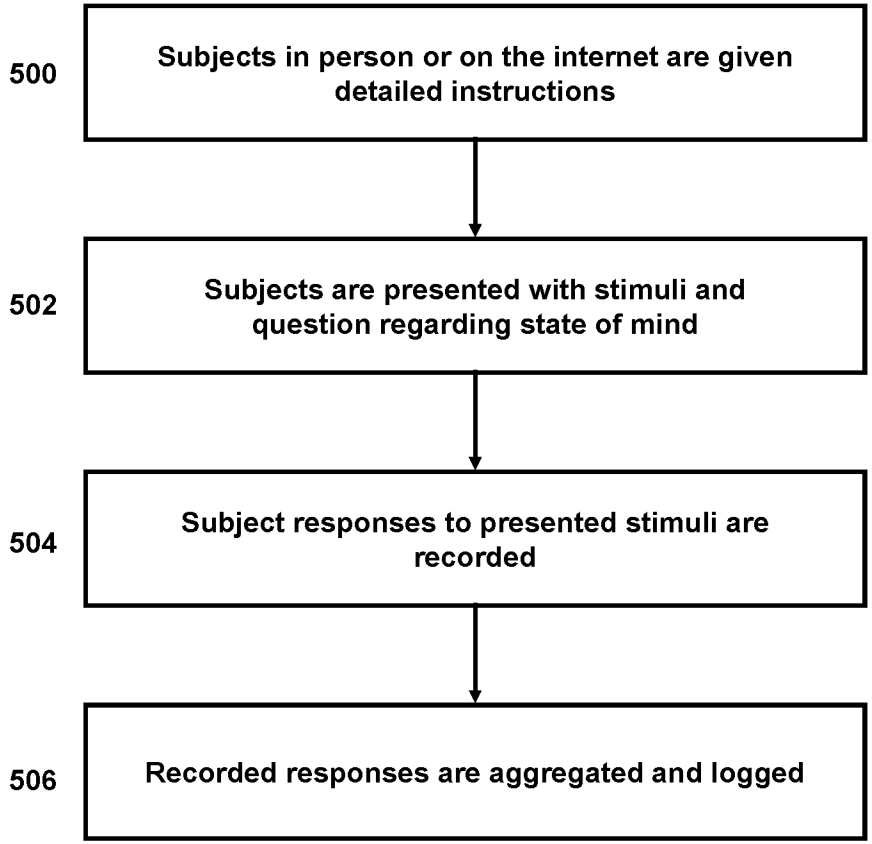
500
Subjects in person or on the internet are given detailed instructions
502
Subjects are presented with stimuli and question regarding state of mind
504
Subject responses to presented stimuli are recorded
506
Recorded responses are aggregated and logged

FIG. 5

600	602	604	606
subject_id	**derived_stim**	**response**	**response_time**
2329	/ims/seg114/vid44m22s23-28	3	440
2329	/ims/seg3932/vid329m24s01-16	1	600
2330	/ims/seg114/vid44m22s23-28	1	280
2330	/ims/seg118/vid51m02s44-50	4	500

FIG. 6

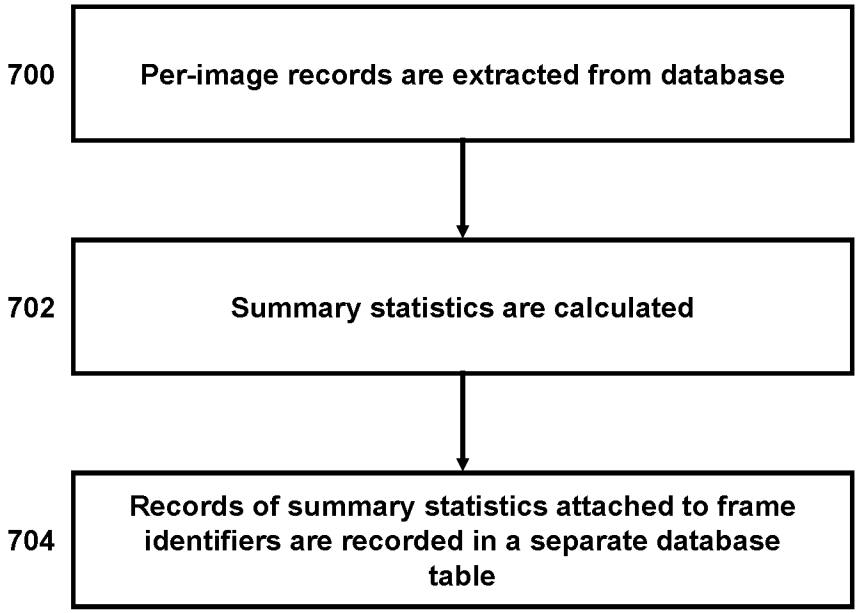
700
Per-image records are extracted from database
702
Summary statistics are calculated
704
Records of summary statistics attached to frame identifiers are recorded in a separate database table

FIG. 7

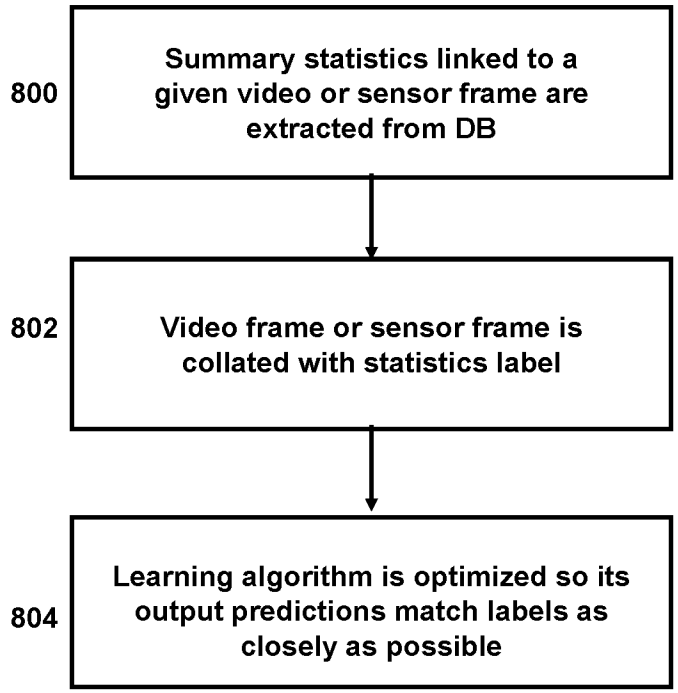
800
Summary statistics linked to a given video or sensor frame are extracted from DB
802
Video frame or sensor frame is collated with statistics label
804
Learning algorithm is optimized so its output predictions match labels as closely as possible

FIG. 8

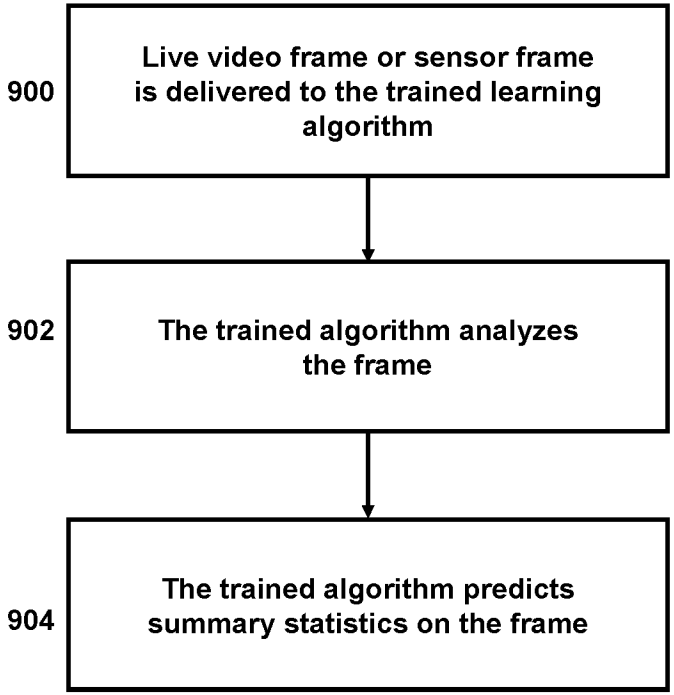
900
Live video frame or sensor frame is delivered to the trained learning algorithm
902
The trained algorithm analyzes the frame
904
The trained algorithm predicts summary statistics on the frame

FIG. 9

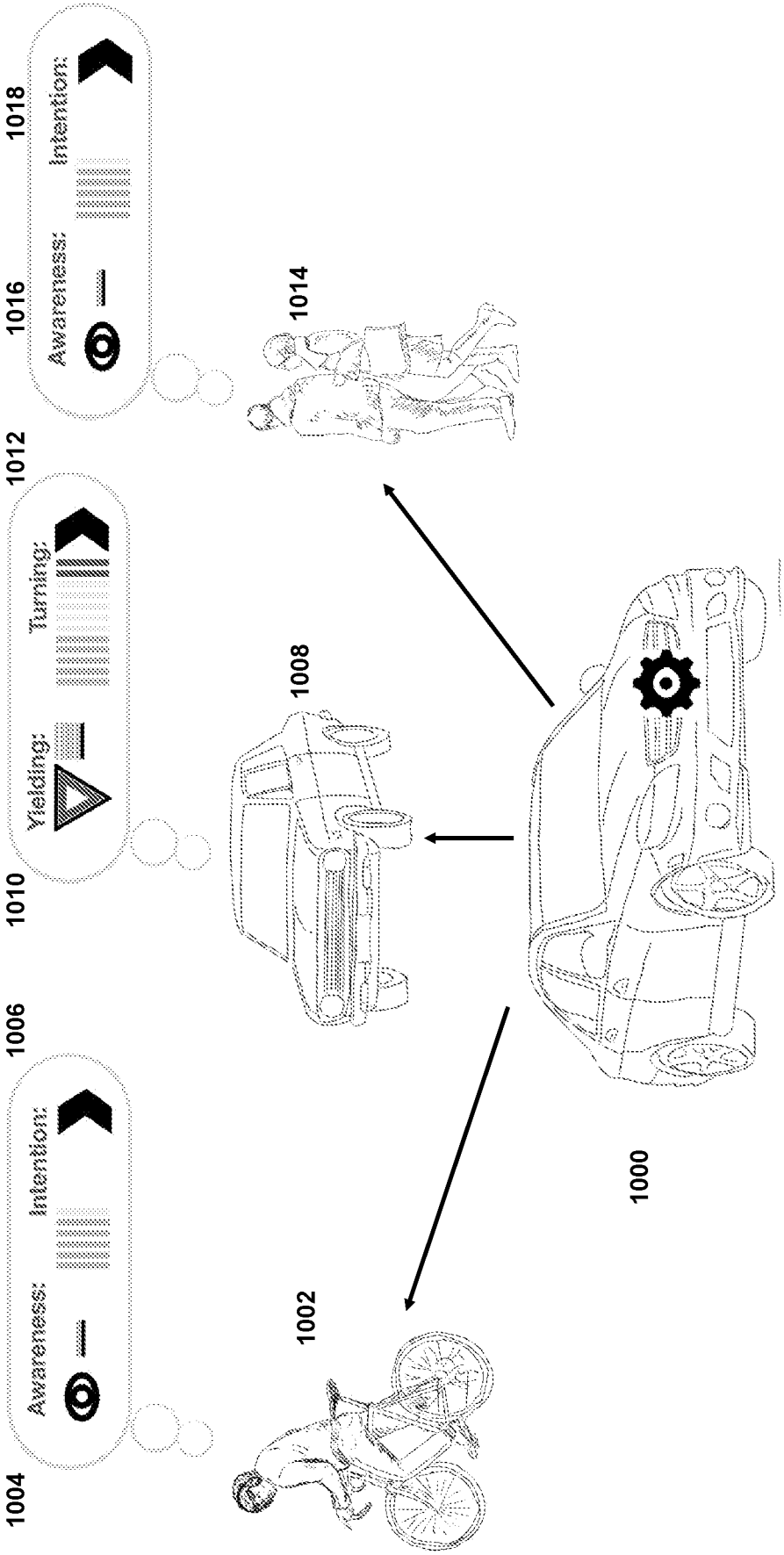
1004
Awareness:
Intention:
1006
1010
Yielding:
Turning:
1012
1016
Awareness:
Intention:
1018
1002
1008
1014
1000

FIG. 10

PTO/AIA/14 (11-15)
Approved for use through 04/30/2017. OMB 0651-0032
U.S. Patent and Trademark Office; U.S. DEPARTMENT OF COMMERCE
Under the Paperwork Reduction Act of 1995, no persons are required to respond to a collection of information unless it contains a valid OMB control number.

Application Data Sheet 37 CFR 1.76	Attorney Docket Number	2210871.00123US2
	Application Number	
Title of Invention	SYSTEM AND METHOD OF PREDICTING HUMAN INTERACTION WITH VEHICLES	

The application data sheet is part of the provisional or nonprovisional application for which it is being submitted. The following form contains the bibliographic data arranged in a format specified by the United States Patent and Trademark Office as outlined in 37 CFR 1.76.
This document may be completed electronically and submitted to the Office in electronic format using the Electronic Filing System (EFS) or the document may be printed and included in a paper filed application.

Secrecy Order 37 CFR 5.2:

☐ Portions or all of the application associated with this Application Data Sheet may fall under a Secrecy Order pursuant to 37 CFR 5.2 (Paper filers only. Applications that fall under Secrecy Order may not be filed electronically.)

Inventor Information:

Inventor 1 Remove

Legal Name

Prefix	Given Name	Middle Name	Family Name	Suffix
Mr.	Sam		ANTHONY	

Residence Information (Select One) ● US Residency Non US Residency Active US Military Service

City	Cambridge	State/Province	MA	Country of Residence i	US

Mailing Address of Inventor:

Address 1	10 Ware Street
Address 2	
City	Cambridge
State/Province	MA
Postal Code	02138
Country i	US

Inventor 2 Remove

Legal Name

Prefix	Given Name	Middle Name	Family Name	Suffix
Mr.	Sid		MISRA	

Residence Information (Select One) ◉ US Residency Non US Residency Active US Military Service

City	Cambridge	State/Province	MA	Country of Residence i	US

Mailing Address of Inventor:

Address 1	10 Ware Street
Address 2	
City	Cambridge
State/Province	MA
Postal Code	02138
Country i	US

Inventor 3 Remove

Legal Name

Prefix	Given Name	Middle Name	Family Name	Suffix
Mr.	Avery		FALLER	

Residence Information (Select One) ◉ US Residency Non US Residency Active US Military Service

Under the Paperwork Reduction Act of 1995, no persons are required to respond to a collection of information unless it contains a valid OMB control number.

Application Data Sheet 37 CFR 1.76	Attorney Docket Number	2210871.00123US2
	Application Number	
Title of Invention	SYSTEM AND METHOD OF PREDICTING HUMAN INTERACTION WITH VEHICLES	

City	Cambridge	**State/Province**	MA	**Country of Residence**	US

Mailing Address of Inventor:

Address 1	10 Ware Street		
Address 2			
City	Cambridge	**State/Province**	MA
Postal Code	02138	**Country**	US

All Inventors Must Be Listed - Additional Inventor Information blocks may be generated within this form by selecting the **Add** button. Add

Correspondence Information:

Enter either Customer Number or complete the Correspondence Information section below. For further information see 37 CFR 1.33(a).

☐ **An Address is being provided for the correspondence Information of this application.**

Customer Number	23483		
Email Address		Add Email	Remove Email

Application Information:

Title of the Invention	SYSTEM AND METHOD OF PREDICTING HUMAN INTERACTION WITH VEHICLES		
Attorney Docket Number	2210871.00123US2	**Small Entity Status Claimed**	☒
Application Type	Nonprovisional		
Subject Matter	Utility		
Total Number of Drawing Sheets (if any)	11	**Suggested Figure for Publication (if any)**	10

Filing By Reference:

Only complete this section when filing an application by reference under 35 U.S.C. 111(c) and 37 CFR 1.57(a). Do not complete this section if application papers including a specification and any drawings are being filed. Any domestic benefit or foreign priority information must be provided in the appropriate section(s) below (i.e., "Domestic Benefit/National Stage Information" and "Foreign Priority Information").

For the purposes of a filing date under 37 CFR 1.53(b), the description and any drawings of the present application are replaced by this reference to the previously filed application, subject to conditions and requirements of 37 CFR 1.57(a).

Application number of the previously filed application	Filing date (YYYY-MM-DD)	Intellectual Property Authority or Country

Publication Information:

☐ Request Early Publication (Fee required at time of Request 37 CFR 1.219)

☐ **Request Not to Publish.** I hereby request that the attached application not be published under 35 U.S.C. 122(b) and certify that the invention disclosed in the attached application **has not and will not** be the subject of an application filed in another country, or under a multilateral international agreement, that requires publication at eighteen months after filing.

Under the Paperwork Reduction Act of 1995, no persons are required to respond to a collection of information unless it contains a valid OMB control number.

Application Data Sheet 37 CFR 1.76	Attorney Docket Number	2210871.00123US2
	Application Number	
Title of Invention	SYSTEM AND METHOD OF PREDICTING HUMAN INTERACTION WITH VEHICLES	

Representative Information:

Representative information should be provided for all practitioners having a power of attorney in the application. Providing this information in the Application Data Sheet does not constitute a power of attorney in the application (see 37 CFR 1.32).
Either enter Customer Number or complete the Representative Name section below. If both sections are completed the customer Number will be used for the Representative Information during processing.

Please Select One:	● Customer Number	US Patent Practitioner	◯ Limited Recognition (37 CFR 11.9)
Customer Number	23483		

Domestic Benefit/National Stage Information:

This section allows for the applicant to either claim benefit under 35 U.S.C. 119(e), 120, 121, 365(c), or 386(c) or indicate National Stage entry from a PCT application. Providing benefit claim information in the Application Data Sheet constitutes the specific reference required by 35 U.S.C. 119(e) or 120, and 37 CFR 1.78.
When referring to the current application, please leave the "Application Number" field blank.

Prior Application Status	Pending		Remove
Application Number	Continuity Type	Prior Application Number	Filing or 371(c) Date (YYYY-MM-DD)
	Claims benefit of provisional	62/528771	2017-07-05

Additional Domestic Benefit/National Stage Data may be generated within this form by selecting the **Add** button. Add

Foreign Priority Information:

This section allows for the applicant to claim priority to a foreign application. Providing this information in the application data sheet constitutes the claim for priority as required by 35 U.S.C. 119(b) and 37 CFR 1.55. When priority is claimed to a foreign application that is eligible for retrieval under the priority document exchange program (PDX)[i] the information will be used by the Office to automatically attempt retrieval pursuant to 37 CFR 1.55(i)(1) and (2). Under the PDX program, applicant bears the ultimate responsibility for ensuring that a copy of the foreign application is received by the Office from the participating foreign intellectual property office, or a certified copy of the foreign priority application is filed, within the time period specified in 37 CFR 1.55(g)(1).

Remove

Application Number	Country[i]	Filing Date (YYYY-MM-DD)	Access Code[i] (if applicable)

Additional Foreign Priority Data may be generated within this form by selecting the **Add** button. Add

Under the Paperwork Reduction Act of 1995, no persons are required to respond to a collection of information unless it contains a valid OMB control number.

Application Data Sheet 37 CFR 1.76	Attorney Docket Number	2210871.00123US2
	Application Number	
Title of Invention	SYSTEM AND METHOD OF PREDICTING HUMAN INTERACTION WITH VEHICLES	

Statement under 37 CFR 1.55 or 1.78 for AIA (First Inventor to File) Transition Applications

☐ This application (1) claims priority to or the benefit of an application filed before March 16, 2013 and (2) also contains, or contained at any time, a claim to a claimed invention that has an effective filing date on or after March 16, 2013.
NOTE: By providing this statement under 37 CFR 1.55 or 1.78, this application, with a filing date on or after March 16, 2013, will be examined under the first inventor to file provisions of the AIA.

Application Data Sheet 37 CFR 1.76	Attorney Docket Number	2210871.00123US2
	Application Number	
Title of Invention	SYSTEM AND METHOD OF PREDICTING HUMAN INTERACTION WITH VEHICLES	

Authorization or Opt-Out of Authorization to Permit Access:

When this Application Data Sheet is properly signed and filed with the application, applicant has provided written authority to permit a participating foreign intellectual property (IP) office access to the instant application-as-filed (see paragraph A in subsection 1 below) and the European Patent Office (EPO) access to any search results from the instant application (see paragraph B in subsection 1 below).

Should applicant choose not to provide an authorization identified in subsection 1 below, applicant **must opt-out** of the authorization by checking the corresponding box A or B or both in subsection 2 below.

NOTE: This section of the Application Data Sheet is **ONLY** reviewed and processed with the **INITIAL** filing of an application. After the initial filing of an application, an Application Data Sheet cannot be used to provide or rescind authorization for access by a foreign IP office(s). Instead, Form PTO/SB/39 or PTO/SB/69 must be used as appropriate.

1. Authorization to Permit Access by a Foreign Intellectual Property Office(s)

A. Priority Document Exchange (PDX) - Unless box A in subsection 2 (opt-out of authorization) is checked, the undersigned hereby **grants the USPTO authority** to provide the European Patent Office (EPO), the Japan Patent Office (JPO), the Korean Intellectual Property Office (KIPO), the State Intellectual Property Office of the People's Republic of China (SIPO), the World Intellectual Property Organization (WIPO), and any other foreign intellectual property office participating with the USPTO in a bilateral or multilateral priority document exchange agreement in which a foreign application claiming priority to the instant patent application is filed, access to: (1) the instant patent application-as-filed and its related bibliographic data, (2) any foreign or domestic application to which priority or benefit is claimed by the instant application and its related bibliographic data, and (3) the date of filing of this Authorization. See 37 CFR 1.14(h)(1).

B. Search Results from U.S. Application to EPO - Unless box B in subsection 2 (opt-out of authorization) is checked, the undersigned hereby **grants the USPTO authority** to provide the EPO access to the bibliographic data and search results from the instant patent application when a European patent application claiming priority to the instant patent application is filed. See 37 CFR 1.14(h)(2).

The applicant is reminded that the EPO's Rule 141(1) EPC (European Patent Convention) requires applicants to submit a copy of search results from the instant application without delay in a European patent application that claims priority to the instant application.

2. Opt-Out of Authorizations to Permit Access by a Foreign Intellectual Property Office(s)

☐ A. Applicant **DOES NOT** authorize the USPTO to permit a participating foreign IP office access to the instant application-as-filed. If this box is checked, the USPTO will not be providing a participating foreign IP office with any documents and information identified in subsection 1A above.

☐ B. Applicant **DOES NOT** authorize the USPTO to transmit to the EPO any search results from the instant patent application. If this box is checked, the USPTO will not be providing the EPO with search results from the instant application.

NOTE: Once the application has published or is otherwise publicly available, the USPTO may provide access to the application in accordance with 37 CFR 1.14.

Under the Paperwork Reduction Act of 1995, no persons are required to respond to a collection of information unless it contains a valid OMB control number.

Application Data Sheet 37 CFR 1.76	Attorney Docket Number	2210871.00123US2
	Application Number	
Title of Invention	SYSTEM AND METHOD OF PREDICTING HUMAN INTERACTION WITH VEHICLES	

Applicant Information:

Providing assignment information in this section does not substitute for compliance with any requirement of part 3 of Title 37 of CFR to have an assignment recorded by the Office.

Applicant 1 Remove

If the applicant is the inventor (or the remaining joint inventor or inventors under 37 CFR 1.45), this section should not be completed. The information to be provided in this section is the name and address of the legal representative who is the applicant under 37 CFR 1.43; or the name and address of the assignee, person to whom the inventor is under an obligation to assign the invention, or person who otherwise shows sufficient proprietary interest in the matter who is the applicant under 37 CFR 1.46. If the applicant is an applicant under 37 CFR 1.46 (assignee, person to whom the inventor is obligated to assign, or person who otherwise shows sufficient proprietary interest) together with one or more joint inventors, then the joint inventor or inventors who are also the applicant should be identified in this section. Clear

● Assignee	Legal Representative under 35 U.S.C. 117	Joint Inventor
Person to whom the inventor is obligated to assign.	Person who shows sufficient proprietary interest	

If applicant is the legal representative, indicate the authority to file the patent application, the inventor is:

Name of the Deceased or Legally Incapacitated Inventor:

If the Applicant is an Organization check here. ☒

Organization Name	Perceptive Automata		
Mailing Address Information For Applicant:			
Address 1	10 Ware Street		
Address 2			
City	Cambridge	**State/Province**	MA
Country	US	Postal Code	02138
Phone Number		Fax Number	
Email Address			

Additional Applicant Data may be generated within this form by selecting the Add button. Add

Assignee Information including Non-Applicant Assignee Information:

Providing assignment information in this section does not substitute for compliance with any requirement of part 3 of Title 37 of CFR to have an assignment recorded by the Office.

Under the Paperwork Reduction Act of 1995, no persons are required to respond to a collection of information unless it contains a valid OMB control number.

Application Data Sheet 37 CFR 1.76	Attorney Docket Number	2210871.00123US2
	Application Number	
Title of Invention	SYSTEM AND METHOD OF PREDICTING HUMAN INTERACTION WITH VEHICLES	

Assignee 1

Complete this section if assignee information, including non-applicant assignee information, is desired to be included on the patent application publication. An assignee-applicant identified in the "Applicant Information" section will appear on the patent application publication as an applicant. For an assignee-applicant, complete this section only if identification as an assignee is also desired on the patent application publication.

Remove

If the Assignee or Non-Applicant Assignee is an Organization check here. ☐

Prefix	**Given Name**	Middle Name	**Family Name**	Suffix

Mailing Address Information For Assignee including Non-Applicant Assignee:

Address 1			
Address 2			
City		**State/Province**	
Country i		Postal Code	
Phone Number		Fax Number	
Email Address			

Additional Assignee or Non-Applicant Assignee Data may be generated within this form by selecting the Add button. Add

Signature:

Remove

NOTE: This Application Data Sheet must be signed in accordance with 37 CFR 1.33(b). **However, if this Application Data Sheet is submitted with the INITIAL filing of the application and either box A or B is not checked in subsection 2 of the "Authorization or Opt-Out of Authorization to Permit Access" section, then this form must also be signed in accordance with 37 CFR 1.14(c).**

This Application Data Sheet **must** be signed by a patent practitioner if one or more of the applicants is a **juristic entity** (e.g., corporation or association). If the applicant is two or more joint inventors, this form must be signed by a patent practitioner, **all** joint inventors who are the applicant, or one or more joint inventor-applicants who have been given power of attorney (e.g., see USPTO Form PTO/AIA/81) on behalf of **all** joint inventor-applicants.

See 37 CFR 1.4(d) for the manner of making signatures and certifications.

Signature	/Yvonne Lee/			Date (YYYY-MM-DD)	2017-12-04
First Name	Yvonne	Last Name	Lee	Registration Number	72,162

Additional Signature may be generated within this form by selecting the Add button. Add

Under the Paperwork Reduction Act of 1995, no persons are required to respond to a collection of information unless it contains a valid OMB control number.

Application Data Sheet 37 CFR 1.76	Attorney Docket Number	2210871.00123US2
	Application Number	
Title of Invention	SYSTEM AND METHOD OF PREDICTING HUMAN INTERACTION WITH VEHICLES	

This collection of information is required by 37 CFR 1.76. The information is required to obtain or retain a benefit by the public which is to file (and by the USPTO to process) an application. Confidentiality is governed by 35 U.S.C. 122 and 37 CFR 1.14. This collection is estimated to take 23 minutes to complete, including gathering, preparing, and submitting the completed application data sheet form to the USPTO. Time will vary depending upon the individual case. Any comments on the amount of time you require to complete this form and/or suggestions for reducing this burden, should be sent to the Chief Information Officer, U.S. Patent and Trademark Office, U.S. Department of Commerce, P.O. Box 1450, Alexandria, VA 22313-1450. DO NOT SEND FEES OR COMPLETED FORMS TO THIS ADDRESS. **SEND TO: Commissioner for Patents, P.O. Box 1450, Alexandria, VA 22313-1450.**

Privacy Act Statement

The Privacy Act of 1974 (P.L. 93-579) requires that you be given certain information in connection with your submission of the attached form related to a patent application or patent. Accordingly, pursuant to the requirements of the Act, please be advised that: (1) the general authority for the collection of this information is 35 U.S.C. 2(b)(2); (2) furnishing of the information solicited is voluntary; and (3) the principal purpose for which the information is used by the U.S. Patent and Trademark Office is to process and/or examine your submission related to a patent application or patent. If you do not furnish the requested information, the U.S. Patent and Trademark Office may not be able to process and/or examine your submission, which may result in termination of proceedings or abandonment of the application or expiration of the patent.

The information provided by you in this form will be subject to the following routine uses:

1 The information on this form will be treated confidentially to the extent allowed under the Freedom of Information Act (5 U.S.C. 552) and the Privacy Act (5 U.S.C. 552a). Records from this system of records may be disclosed to the Department of Justice to determine whether the Freedom of Information Act requires disclosure of these records.

2. A record from this system of records may be disclosed, as a routine use, in the course of presenting evidence to a court, magistrate, or administrative tribunal, including disclosures to opposing counsel in the course of settlement negotiations.

3 A record in this system of records may be disclosed, as a routine use, to a Member of Congress submitting a request involving an individual, to whom the record pertains, when the individual has requested assistance from the Member with respect to the subject matter of the record.

4. A record in this system of records may be disclosed, as a routine use, to a contractor of the Agency having need for the information in order to perform a contract. Recipients of information shall be required to comply with the requirements of the Privacy Act of 1974, as amended, pursuant to 5 U.S.C. 552a(m).

5. A record related to an International Application filed under the Patent Cooperation Treaty in this system of records may be disclosed, as a routine use, to the International Bureau of the World Intellectual Property Organization, pursuant to the Patent CooperationTreaty.

6. A record in this system of records may be disclosed, as a routine use, to another federal agency for purposes of National Security review (35 U.S.C. 181) and for review pursuant to the Atomic Energy Act (42 U.S.C. 218(c)).

7. A record from this system of records may be disclosed, as a routine use, to the Administrator, General Services, or his/her designee, during an inspection of records conducted by GSA as part of that agency's responsibility to recommend improvements in records management practices and programs, under authority of 44 U.S.C. 2904 and 2906. Such disclosure shall be made in accordance with the GSA regulations governing inspection of records for this purpose, and any other relevant (i.e., GSA or Commerce) directive. Such disclosure shall not be used to make determinations about individuals.

8. A record from this system of records may be disclosed, as a routine use, to the public after either publication of the application pursuant to 35 U.S.C. 122(b) or issuance of a patent pursuant to 35 U.S.C. 151. Further, a record may be disclosed, subject to the limitations of 37 CFR 1.14, as a routine use, to the public if the record was filed in an application which became abandoned or in which the proceedings were terminated and which application is referenced by either a published application, an application open to public inspections or an issued patent.

9. A record from this system of records may be disclosed, as a routine use, to a Federal, State, or local law enforcement agency, if the USPTO becomes aware of a violation or potential violation of law or regulation.

Electronic Patent Application Fee Transmittal

Application Number:	
Filing Date:	
Title of Invention:	SYSTEM AND METHOD OF PREDICTING HUMAN INTERACTION WITH VEHICLES
First Named Inventor/Applicant Name:	Sam Anthony
Filer:	Yvonne Shao-I Lee/Sharlene McLean
Attorney Docket Number:	2210871.00123US2

Filed as Small Entity

Filing Fees for Utility under 35 USC 111(a)

Description	Fee Code	Quantity	Amount	Sub-Total in USD($)
Basic Filing:				
UTILITY FILING FEE (ELECTRONIC FILING)	4011	1	70	70
UTILITY SEARCH FEE	2111	1	300	300
UTILITY EXAMINATION FEE	2311	1	360	360
Pages:				
Claims:				
Miscellaneous-Filing:				
LATE FILING FEE FOR OATH OR DECLARATION	2051	1	70	70
Petition:				

Description	Fee Code	Quantity	Amount	Sub-Total in USD($)
Patent-Appeals-and-Interference:				
Post-Allowance-and-Post-Issuance:				
Extension-of-Time:				
Miscellaneous:				
			Total in USD ($)	**800**

Electronic Acknowledgement Receipt

EFS ID:	31114396
Application Number:	15830549
International Application Number:	
Confirmation Number:	8998
Title of Invention:	SYSTEM AND METHOD OF PREDICTING HUMAN INTERACTION WITH VEHICLES
First Named Inventor/Applicant Name:	Sam Anthony
Customer Number:	23483
Filer:	Yvonne Shao-I Lee/Sharlene McLean
Filer Authorized By:	Yvonne Shao-I Lee
Attorney Docket Number:	2210871.00123US2
Receipt Date:	04-DEC-2017
Filing Date:	
Time Stamp:	15:24:03
Application Type:	Utility under 35 USC 111(a)

Payment information:

Submitted with Payment	yes
Payment Type	CARD
Payment was successfully received in RAM	$800
RAM confirmation Number	120517INTEFSW15250500
Deposit Account	080219
Authorized User	Sharlene McLean

The Director of the USPTO is hereby authorized to charge indicated fees and credit any overpayment as follows:

37 CFR 1.16 (National application filing, search, and examination fees)

37 CFR 1.17 (Patent application and reexamination processing fees)

37 CFR 1.19 (Document supply fees)

37 CFR 1.20 (Post Issuance fees)

37 CFR 1.21 (Miscellaneous fees and charges)

File Listing:

Document Number	Document Description	File Name	File Size(Bytes)/ Message Digest	Multi Part /.zip	Pages (if appl.)
1		2017-12-04_123US2_Specification.PDF	166641 a3124b7c297412fac911f6f5b8023da10ccc9a1b	yes	27

Multipart Description/PDF files in .zip description

Document Description	Start	End
Abstract	27	27
Claims	22	26
Specification	1	21

Warnings:

Information:

2	Drawings-only black and white line drawings	123US2_Figures.PDF	1804959 60421f2b6b81104b30aa512d5a7c89cfc8a5b24f	no	11

Warnings:

Information:

3	Application Data Sheet	2017-12-04_123US2_ADS.PDF	1822551 efe7e3a9ddf7c7c3e3bee4f65a2ab56cb7b9bb52	no	9

Warnings:

Information:

4	Fee Worksheet (SB06)	fee-info.pdf	36732 beb108fd4508e6cc8ce372f04f7ba172ebe3afa8	no	2

Warnings:

Information:

Total Files Size (in bytes):	3830883

This Acknowledgement Receipt evidences receipt on the noted date by the USPTO of the indicated documents, characterized by the applicant, and including page counts, where applicable. It serves as evidence of receipt similar to a Post Card, as described in MPEP 503.

New Applications Under 35 U.S.C. 111
If a new application is being filed and the application includes the necessary components for a filing date (see 37 CFR 1.53(b)-(d) and MPEP 506), a Filing Receipt (37 CFR 1.54) will be issued in due course and the date shown on this Acknowledgement Receipt will establish the filing date of the application.
National Stage of an International Application under 35 U.S.C. 371
If a timely submission to enter the national stage of an international application is compliant with the conditions of 35 U.S.C. 371 and other applicable requirements a Form PCT/DO/EO/903 indicating acceptance of the application as a national stage submission under 35 U.S.C. 371 will be issued in addition to the Filing Receipt, in due course.
New International Application Filed with the USPTO as a Receiving Office
If a new international application is being filed and the international application includes the necessary components for an international filing date (see PCT Article 11 and MPEP 1810), a Notification of the International Application Number and of the International Filing Date (Form PCT/RO/105) will be issued in due course, subject to prescriptions concerning national security, and the date shown on this Acknowledgement Receipt will establish the international filing date of the application.

PATENT APPLICATION FEE DETERMINATION RECORD

Substitute for Form PTO-875

Application or Docket Number
15/830,549

APPLICATION AS FILED - PART I

FOR	(Column 1) NUMBER FILED	(Column 2) NUMBER EXTRA	SMALL ENTITY RATE($)	SMALL ENTITY FEE($)	OR	OTHER THAN SMALL ENTITY RATE($)	OTHER THAN SMALL ENTITY FEE($)
BASIC FEE (37 CFR 1.16(a), (b), or (c))	N/A	N/A	N/A	70		N/A	
SEARCH FEE (37 CFR 1.16(k), (i), or (m))	N/A	N/A	N/A	300		N/A	
EXAMINATION FEE (37 CFR 1.16(o), (p), or (q))	N/A	N/A	N/A	360		N/A	
TOTAL CLAIMS (37 CFR 1.16(i))	20 minus 20 =	*	x 40 =	0.00	OR		
INDEPENDENT CLAIMS (37 CFR 1.16(h))	2 minus 3 =	*	x 210 =	0.00			
APPLICATION SIZE FEE (37 CFR 1.16(s))	If the specification and drawings exceed 100 sheets of paper, the application size fee due is $310 ($155 for small entity) for each additional 50 sheets or fraction thereof. See 35 U.S.C. 41(a)(1)(G) and 37 CFR 1.16(s).			0.00			
MULTIPLE DEPENDENT CLAIM PRESENT (37 CFR 1.16(j))				0.00			
* If the difference in column 1 is less than zero, enter "0" in column 2.			TOTAL	730		TOTAL	

APPLICATION AS AMENDED - PART II

		(Column 1) CLAIMS REMAINING AFTER AMENDMENT		(Column 2) HIGHEST NUMBER PREVIOUSLY PAID FOR	(Column 3) PRESENT EXTRA	SMALL ENTITY RATE($)	SMALL ENTITY ADDITIONAL FEE($)	OR	OTHER THAN SMALL ENTITY RATE($)	OTHER THAN SMALL ENTITY ADDITIONAL FEE($)
AMENDMENT A	Total (37 CFR 1.16(i))	*	Minus	**	=	x =		OR	x =	
AMENDMENT A	Independent (37 CFR 1.16(h))	*	Minus	***	=	x =		OR	x =	
AMENDMENT A	Application Size Fee (37 CFR 1.16(s))									
AMENDMENT A	FIRST PRESENTATION OF MULTIPLE DEPENDENT CLAIM (37 CFR 1.16(j))							OR		
						TOTAL ADD'L FEE		OR	TOTAL ADD'L FEE	

		(Column 1) CLAIMS REMAINING AFTER AMENDMENT		(Column 2) HIGHEST NUMBER PREVIOUSLY PAID FOR	(Column 3) PRESENT EXTRA	RATE($)	ADDITIONAL FEE($)		RATE($)	ADDITIONAL FEE($)
AMENDMENT B	Total (37 CFR 1.16(i))	*	Minus	**	=	x =		OR	x =	
AMENDMENT B	Independent (37 CFR 1.16(h))	*	Minus	***	=	x =		OR	x =	
AMENDMENT B	Application Size Fee (37 CFR 1.16(s))									
AMENDMENT B	FIRST PRESENTATION OF MULTIPLE DEPENDENT CLAIM (37 CFR 1.16(j))							OR		
						TOTAL ADD'L FEE		OR	TOTAL ADD'L FEE	

* If the entry in column 1 is less than the entry in column 2, write "0" in column 3.
** If the "Highest Number Previously Paid For" IN THIS SPACE is less than 20, enter "20".
*** If the "Highest Number Previously Paid For" IN THIS SPACE is less than 3, enter "3".
The "Highest Number Previously Paid For" (Total or Independent) is the highest found in the appropriate box in column 1.

UNITED STATES PATENT AND TRADEMARK OFFICE

UNITED STATES DEPARTMENT OF COMMERCE
United States Patent and Trademark Office
Address: COMMISSIONER FOR PATENTS
P.O. Box 1450
Alexandria, Virginia 22313-1450
www.uspto.gov

APPLICATION NUMBER	FILING or 371(c) DATE	GRP ART UNIT	FIL FEE REC'D	ATTY.DOCKET.NO	TOT CLAIMS	IND CLAIMS
15/830,549	12/04/2017	1629	800	2210871.00123US2	20	2

CONFIRMATION NO. 8998

23483
WILMERHALE/BOSTON
60 STATE STREET
BOSTON, MA 02109

FILING RECEIPT

OC000000098171118

Date Mailed: 12/22/2017

Receipt is acknowledged of this non-provisional patent application. The application will be taken up for examination in due course. Applicant will be notified as to the results of the examination. Any correspondence concerning the application must include the following identification information: the U.S. APPLICATION NUMBER, FILING DATE, NAME OF APPLICANT, and TITLE OF INVENTION. Fees transmitted by check or draft are subject to collection. Please verify the accuracy of the data presented on this receipt. **If an error is noted on this Filing Receipt, please submit a written request for a Filing Receipt Correction. Please provide a copy of this Filing Receipt with the changes noted thereon. If you received a "Notice to File Missing Parts" for this application, please submit any corrections to this Filing Receipt with your reply to the Notice. When the USPTO processes the reply to the Notice, the USPTO will generate another Filing Receipt incorporating the requested corrections**

Inventor(s)

Sam ANTHONY, Cambridge, MA;
Sid MISRA, Cambridge, MA;
Avery FALLER, Cambridge, MA;

Applicant(s)

Perceptive Automata, Cambridge, MA;

Power of Attorney: None

Domestic Priority data as claimed by applicant

This appln claims benefit of 62/528,771 07/05/2017

Foreign Applications for which priority is claimed (You may be eligible to benefit from the **Patent Prosecution Highway** program at the USPTO. Please see http://www.uspto.gov for more information.) - None.
Foreign application information must be provided in an Application Data Sheet in order to constitute a claim to foreign priority. See 37 CFR 1.55 and 1.76.

Permission to Access Application via Priority Document Exchange: Yes

Permission to Access Search Results: Yes

Applicant may provide or rescind an authorization for access using Form PTO/SB/39 or Form PTO/SB/69 as appropriate.

If Required, Foreign Filing License Granted: 12/18/2017

The country code and number of your priority application, to be used for filing abroad under the Paris Convention, is **US 15/830,549**

Projected Publication Date: 01/10/2019

Non-Publication Request: No

Early Publication Request: No
**** SMALL ENTITY ****
Title

SYSTEM AND METHOD OF PREDICTING HUMAN INTERACTION WITH VEHICLES

Preliminary Class

514

Statement under 37 CFR 1.55 or 1.78 for AIA (First Inventor to File) Transition Applications: No

PROTECTING YOUR INVENTION OUTSIDE THE UNITED STATES

Since the rights granted by a U.S. patent extend only throughout the territory of the United States and have no effect in a foreign country, an inventor who wishes patent protection in another country must apply for a patent in a specific country or in regional patent offices. Applicants may wish to consider the filing of an international application under the Patent Cooperation Treaty (PCT). An international (PCT) application generally has the same effect as a regular national patent application in each PCT-member country. The PCT process **simplifies** the filing of patent applications on the same invention in member countries, but **does not result** in a grant of "an international patent" and does not eliminate the need of applicants to file additional documents and fees in countries where patent protection is desired.

Almost every country has its own patent law, and a person desiring a patent in a particular country must make an application for patent in that country in accordance with its particular laws. Since the laws of many countries differ in various respects from the patent law of the United States, applicants are advised to seek guidance from specific foreign countries to ensure that patent rights are not lost prematurely.

Applicants also are advised that in the case of inventions made in the United States, the Director of the USPTO must issue a license before applicants can apply for a patent in a foreign country. The filing of a U.S. patent application serves as a request for a foreign filing license. The application's filing receipt contains further information and guidance as to the status of applicant's license for foreign filing.

Applicants may wish to consult the USPTO booklet, "General Information Concerning Patents" (specifically, the section entitled "Treaties and Foreign Patents") for more information on timeframes and deadlines for filing foreign patent applications. The guide is available either by contacting the USPTO Contact Center at 800-786-9199, or it can be viewed on the USPTO website at http://www.uspto.gov/web/offices/pac/doc/general/index.html.

For information on preventing theft of your intellectual property (patents, trademarks and copyrights), you may wish to consult the U.S. Government website, http://www.stopfakes.gov. Part of a Department of Commerce initiative, this website includes self-help "toolkits" giving innovators guidance on how to protect intellectual property in specific countries such as China, Korea and Mexico. For questions regarding patent enforcement issues, applicants may call the U.S. Government hotline at 1-866-999-HALT (1-866-999-4258).

LICENSE FOR FOREIGN FILING UNDER

Title 35, United States Code, Section 184

Title 37, Code of Federal Regulations, 5.11 & 5.15

GRANTED

The applicant has been granted a license under 35 U.S.C. 184, if the phrase "IF REQUIRED, FOREIGN FILING LICENSE GRANTED" followed by a date appears on this form. Such licenses are issued in all applications where the conditions for issuance of a license have been met, regardless of whether or not a license may be required as set forth in 37 CFR 5.15. The scope and limitations of this license are set forth in 37 CFR 5.15(a) unless an earlier license has been issued under 37 CFR 5.15(b). The license is subject to revocation upon written notification. The date indicated is the effective date of the license, unless an earlier license of similar scope has been granted under 37 CFR 5.13 or 5.14.

This license is to be retained by the licensee and may be used at any time on or after the effective date thereof unless it is revoked. This license is automatically transferred to any related applications(s) filed under 37 CFR 1.53(d). This license is not retroactive.

The grant of a license does not in any way lessen the responsibility of a licensee for the security of the subject matter as imposed by any Government contract or the provisions of existing laws relating to espionage and the national security or the export of technical data. Licensees should apprise themselves of current regulations especially with respect to certain countries, of other agencies, particularly the Office of Defense Trade Controls, Department of State (with respect to Arms, Munitions and Implements of War (22 CFR 121-128)); the Bureau of Industry and Security, Department of Commerce (15 CFR parts 730-774); the Office of Foreign AssetsControl, Department of Treasury (31 CFR Parts 500+) and the Department of Energy.

NOT GRANTED

No license under 35 U.S.C. 184 has been granted at this time, if the phrase "IF REQUIRED, FOREIGN FILING LICENSE GRANTED" DOES NOT appear on this form. Applicant may still petition for a license under 37 CFR 5.12, if a license is desired before the expiration of 6 months from the filing date of the application. If 6 months has lapsed from the filing date of this application and the licensee has not received any indication of a secrecy order under 35 U.S.C. 181, the licensee may foreign file the application pursuant to 37 CFR 5.15(b).

SelectUSA

The United States represents the largest, most dynamic marketplace in the world and is an unparalleled location for business investment, innovation, and commercialization of new technologies. The U.S. offers tremendous resources and advantages for those who invest and manufacture goods here. Through SelectUSA, our nation works to promote and facilitate business investment. SelectUSA provides information assistance to the international investor community; serves as an ombudsman for existing and potential investors; advocates on behalf of U.S. cities, states, and regions competing for global investment; and counsels U.S. economic development organizations on investment attraction best practices. To learn more about why the United States is the best country in the world to develop technology, manufacture products, deliver services, and grow your business, visit http://www.SelectUSA.gov or call +1-202-482-6800.

UNITED STATES PATENT AND TRADEMARK OFFICE

UNITED STATES DEPARTMENT OF COMMERCE
United States Patent and Trademark Office
Address: COMMISSIONER FOR PATENTS
P.O. Box 1450
Alexandria, Virginia 22313-1450
www.uspto.gov

APPLICATION NUMBER	FILING OR 371(C) DATE	FIRST NAMED APPLICANT	ATTY. DOCKET NO./TITLE
15/830,549	12/04/2017	Sam ANTHONY	2210871.00123US2

CONFIRMATION NO. 8998

23483
WILMERHALE/BOSTON
60 STATE STREET
BOSTON, MA 02109

INFORMAL NOTICE

OC000000096171119

Date Mailed: 12/22/2017

INFORMATIONAL NOTICE TO APPLICANT

Applicant is notified that the above-identified application contains the deficiencies noted below. No period for reply is set forth in this notice for correction of these deficiencies. However, if a deficiency relates to the inventor's oath or declaration, the applicant must file an oath or declaration in compliance with 37 CFR 1.63, or a substitute statement in compliance with 37 CFR 1.64, executed by or with respect to each actual inventor no later than the expiration of the time period set in the "Notice of Allowability" to avoid abandonment. See 37 CFR 1.53(f).

The item(s) indicated below are also required and should be submitted with any reply to this notice to avoid further processing delays.

- A properly executed inventor's oath or declaration has not been received for the following inventor(s):
  Sam ANTHONY
  Sid MISRA
  Avery FALLER

Questions about the contents of this notice and the requirements it sets forth should be directed to the Office of Data Management, Application Assistance Unit, at **(571) 272-4000** or **(571) 272-4200** or **1-888-786-0101**.

/lvongxay/

PTO/AIA/01 (06-12)
Approved for use through 01/31/2014. OMB 0651-0032
U.S. Patent and Trademark Office; U.S. DEPARTMENT OF COMMERCE
Under the Paperwork Reduction Act of 1995, no persons are required to respond to a collection of information unless it displays a valid OMB control number.

DECLARATION (37 CFR 1.63) FOR UTILITY OR DESIGN APPLICATION USING AN APPLICATION DATA SHEET (37 CFR 1.76)

Title of Invention	SYSTEM AND METHOD OF PREDICTING HUMAN INTERACTION WITH VEHICLES

As the below named inventor, I hereby declare that:

This declaration is directed to:

☐ The attached application, or

☒ United States application or PCT international application number 15/830,549 filed on 12/04/2017 .

The above-identified application was made or authorized to be made by me.

I believe that I am the original inventor or an original joint inventor of a claimed invention in the application.

I hereby acknowledge that any willful false statement made in this declaration is punishable under 18 U.S.C. 1001 by fine or imprisonment of not more than five (5) years, or both.

WARNING:

Petitioner/applicant is cautioned to avoid submitting personal information in documents filed in a patent application that may contribute to identity theft. Personal information such as social security numbers, bank account numbers, or credit card numbers (other than a check or credit card authorization form PTO-2038 submitted for payment purposes) is never required by the USPTO to support a petition or an application. If this type of personal information is included in documents submitted to the USPTO, petitioners/applicants should consider redacting such personal information from the documents before submitting them to the USPTO. Petitioner/applicant is advised that the record of a patent application is available to the public after publication of the application (unless a non-publication request in compliance with 37 CFR 1.213(a) is made in the application) or issuance of a patent. Furthermore, the record from an abandoned application may also be available to the public if the application is referenced in a published application or an issued patent (see 37 CFR 1.14). Checks and credit card authorization forms PTO-2038 submitted for payment purposes are not retained in the application file and therefore are not publicly available.

LEGAL NAME OF INVENTOR

Inventor: Sam ANTHONY Date (Optional) : _____

Signature: _____

Note: An application data sheet (PTO/SB/14 or equivalent), including naming the entire inventive entity, must accompany this form or must have been previously filed. Use an additional PTO/AIA/01 form for each additional inventor.

PTO/AIA/01 (06-12)
Approved for use through 01/31/2014. OMB 0651-0032
U.S. Patent and Trademark Office; U.S. DEPARTMENT OF COMMERCE
Under the Paperwork Reduction Act of 1995, no persons are required to respond to a collection of information unless it displays a valid OMB control number.

DECLARATION (37 CFR 1.63) FOR UTILITY OR DESIGN APPLICATION USING AN APPLICATION DATA SHEET (37 CFR 1.76)

Title of Invention	SYSTEM AND METHOD OF PREDICTING HUMAN INTERACTION WITH VEHICLES

As the below named inventor, I hereby declare that:

This declaration is directed to:

☐ The attached application, or

☒ United States application or PCT international application number 15/830,549 filed on 12/04/2017 .

The above-identified application was made or authorized to be made by me.

I believe that I am the original inventor or an original joint inventor of a claimed invention in the application.

I hereby acknowledge that any willful false statement made in this declaration is punishable under 18 U.S.C. 1001 by fine or imprisonment of not more than five (5) years, or both.

WARNING:

Petitioner/applicant is cautioned to avoid submitting personal information in documents filed in a patent application that may contribute to identity theft. Personal information such as social security numbers, bank account numbers, or credit card numbers (other than a check or credit card authorization form PTO-2038 submitted for payment purposes) is never required by the USPTO to support a petition or an application. If this type of personal information is included in documents submitted to the USPTO, petitioners/applicants should consider redacting such personal information from the documents before submitting them to the USPTO. Petitioner/applicant is advised that the record of a patent application is available to the public after publication of the application (unless a non-publication request in compliance with 37 CFR 1.213(a) is made in the application) or issuance of a patent. Furthermore, the record from an abandoned application may also be available to the public if the application is referenced in a published application or an issued patent (see 37 CFR 1.14). Checks and credit card authorization forms PTO-2038 submitted for payment purposes are not retained in the application file and therefore are not publicly available.

LEGAL NAME OF INVENTOR

Inventor: Sid MISRA Date (Optional) :

Signature:

Note: An application data sheet (PTO/SB/14 or equivalent), including naming the entire inventive entity, must accompany this form or must have been previously filed. Use an additional PTO/AIA/01 form for each additional inventor.

PTO/AIA/01 (06-12)
Approved for use through 01/31/2014. OMB 0651-0032
U.S. Patent and Trademark Office; U.S. DEPARTMENT OF COMMERCE
Under the Paperwork Reduction Act of 1995, no persons are required to respond to a collection of information unless it displays a valid OMB control number.

DECLARATION (37 CFR 1.63) FOR UTILITY OR DESIGN APPLICATION USING AN APPLICATION DATA SHEET (37 CFR 1.76)

Title of Invention	SYSTEM AND METHOD OF PREDICTING HUMAN INTERACTION WITH VEHICLES

As the below named inventor, I hereby declare that:

This declaration is directed to:

☐ The attached application, or

☒ United States application or PCT international application number 15/830,549 filed on 12/04/2017 .

The above-identified application was made or authorized to be made by me.

I believe that I am the original inventor or an original joint inventor of a claimed invention in the application.

I hereby acknowledge that any willful false statement made in this declaration is punishable under 18 U.S.C. 1001 by fine or imprisonment of not more than five (5) years, or both.

WARNING:

Petitioner/applicant is cautioned to avoid submitting personal information in documents filed in a patent application that may contribute to identity theft. Personal information such as social security numbers, bank account numbers, or credit card numbers (other than a check or credit card authorization form PTO-2038 submitted for payment purposes) is never required by the USPTO to support a petition or an application. If this type of personal information is included in documents submitted to the USPTO, petitioners/applicants should consider redacting such personal information from the documents before submitting them to the USPTO. Petitioner/applicant is advised that the record of a patent application is available to the public after publication of the application (unless a non-publication request in compliance with 37 CFR 1.213(a) is made in the application) or issuance of a patent. Furthermore, the record from an abandoned application may also be available to the public if the application is referenced in a published application or an issued patent (see 37 CFR 1.14). Checks and credit card authorization forms PTO-2038 submitted for payment purposes are not retained in the application file and therefore are not publicly available.

LEGAL NAME OF INVENTOR

Inventor: Avery FALLER Date (Optional) : _____

Signature: Avery Faller

Note: An application data sheet (PTO/SB/14 or equivalent), including naming the entire inventive entity, must accompany this form or must have been previously filed. Use an additional PTO/AIA/01 form for each additional inventor.

Electronic Acknowledgement Receipt

EFS ID:	32501880
Application Number:	15830549
International Application Number:	
Confirmation Number:	8998
Title of Invention:	SYSTEM AND METHOD OF PREDICTING HUMAN INTERACTION WITH VEHICLES
First Named Inventor/Applicant Name:	Sam ANTHONY
Customer Number:	23483
Filer:	Deric X. Geng/James Coughlan
Filer Authorized By:	Deric X. Geng
Attorney Docket Number:	2210871.00123US2
Receipt Date:	01-MAY-2018
Filing Date:	04-DEC-2017
Time Stamp:	15:56:51
Application Type:	Utility under 35 USC 111(a)

Payment information:

Submitted with Payment	no

File Listing:

Document Number	Document Description	File Name	File Size(Bytes)/ Message Digest	Multi Part /.zip	Pages (if appl.)
1	Oath or Declaration filed	Executed-Declarations.pdf	193629 da6299933d663f904e32c46546595c1613bb61fc	no	3

Warnings:

Information:	
Total Files Size (in bytes):	193629

This Acknowledgement Receipt evidences receipt on the noted date by the USPTO of the indicated documents, characterized by the applicant, and including page counts, where applicable. It serves as evidence of receipt similar to a Post Card, as described in MPEP 503.

<u>New Applications Under 35 U.S.C. 111</u>
If a new application is being filed and the application includes the necessary components for a filing date (see 37 CFR 1.53(b)-(d) and MPEP 506), a Filing Receipt (37 CFR 1.54) will be issued in due course and the date shown on this Acknowledgement Receipt will establish the filing date of the application.
<u>National Stage of an International Application under 35 U.S.C. 371</u>
If a timely submission to enter the national stage of an international application is compliant with the conditions of 35 U.S.C. 371 and other applicable requirements a Form PCT/DO/EO/903 indicating acceptance of the application as a national stage submission under 35 U.S.C. 371 will be issued in addition to the Filing Receipt, in due course.
<u>New International Application Filed with the USPTO as a Receiving Office</u>
If a new international application is being filed and the international application includes the necessary components for an international filing date (see PCT Article 11 and MPEP 1810), a Notification of the International Application Number and of the International Filing Date (Form PCT/RO/105) will be issued in due course, subject to prescriptions concerning national security, and the date shown on this Acknowledgement Receipt will establish the international filing date of the application.

Doc Code: PA..
Document Description: Power of Attorney

PTO/AIA/82A (07-13)
Approved for use through 01/31/2018. OMB 0651-0035
U.S. Patent and Trademark Office; U.S. DEPARTMENT OF COMMERCE
Under the Paperwork Reduction Act of 1995, no persons are required to respond to a collection of information unless it displays a valid OMB control number.

TRANSMITTAL FOR POWER OF ATTORNEY TO ONE OR MORE REGISTERED PRACTITIONERS

NOTE: This form is to be submitted with the Power of Attorney by Applicant form (PTO/AIA/82B) to identify the application to which the Power of Attorney is directed, in accordance with 37 CFR 1.5, unless the application number and filing date are identified in the Power of Attorney by Applicant form. If neither form PTO/AIA/82A nor form PTO/AIA82B identifies the application to which the Power of Attorney is directed, the Power of Attorney will not be recognized in the application.

Application Number	15/830,549
Filing Date	December 4, 2017
First Named Inventor	Sam ANTHONY
Title	SYSTEM AND METHOD OF PREDICTING HUMAN INTERACTION WITH VEHICLES
Art Unit	2667
Examiner Name	M. C. Bella
Attorney Docket Number	2210871.00123US2

SIGNATURE of Applicant or Patent Practitioner

Signature	/Yvonne Lee/	Date (Optional)	
Name	Yvonne Lee	Registration Number	72,162
Title (if Applicant is a juristic entity)			
Applicant Name (if Applicant is a juristic entity)			

NOTE: This form must be signed in accordance with 37 CFR 1.33. See 37 CFR 1.4(d) for signature requirements and certifications. If more than one applicant, use multiple forms.

☐ *Total of 1 forms are submitted.

Doc Code: PA..
Document Description: Power of Attorney

PTO/AIA/82B (07-13)
Approved for use through 11/30/2014. OMB 0651-0051
U.S. Patent and Trademark Office; U.S. DEPARTMENT OF COMMERCE
Under the Paperwork Reduction Act of 1995, no persons are required to respond to a collection of information unless it displays a valid OMB control number

POWER OF ATTORNEY BY APPLICANT

I hereby revoke all previous powers of attorney given in the application identified in either the attached transmittal letter or the boxes below.

Application Number	Filing Date

(Note: The boxes above may be left blank if information is provided on form PTO/AIA/82A.)

[x] I hereby appoint the Patent Practitioner(s) associated with the following Customer Number as my/our attorney(s) or agent(s), and to transact all business in the United States Patent and Trademark Office connected therewith for the application referenced in the attached transmittal letter (form PTO/AIA/82A) or identified above: 23483

OR

[ ] I hereby appoint Practitioner(s) named in the attached list (form PTO/AIA/82C) as my/our attorney(s) or agent(s), and to transact all business in the United States Patent and Trademark Office connected therewith for the patent application referenced in the attached transmittal letter (form PTO/AIA/82A) or identified above. (Note: Complete form PTO/AIA/82C.)

Please recognize or change the correspondence address for the application identified in the attached transmittal letter or the boxes above to:

[ ] The address associated with the above-mentioned Customer Number

OR

[x] The address associated with Customer Number: 24395

OR

Firm or Individual Name					
Address					
City		State		Zip	
Country					
Telephone		Email			

I am the Applicant (if the Applicant is a juristic entity, list the Applicant name in the box):

Perceptive Automata

[ ] Inventor or Joint Inventor (title not required below)

[ ] Legal Representative of a Deceased or Legally Incapacitated Inventor (title not required below)

[x] Assignee or Person to Whom the Inventor is Under an Obligation to Assign (provide signer's title if applicant is a juristic entity)

[ ] Person Who Otherwise Shows Sufficient Proprietary Interest (e.g., a petition under 37 CFR 1.46(b)(2) was granted in the application or is concurrently being filed with this document) (provide signer's title if applicant is a juristic entity)

SIGNATURE of Applicant for Patent

The undersigned (whose title is supplied below) is authorized to act on behalf of the applicant (e.g., where the applicant is a juristic entity).

Signature	Kshitij Misra	Date (Optional)	
Name	Kshitij Misra		
Title	President		

NOTE: Signature - This form must be signed by the applicant in accordance with 37 CFR 1.33. See 37 CFR 1.4 for signature requirements and certifications. If more than one applicant, use multiple forms.

[ ] Total of 1 forms are submitted.

Electronic Acknowledgement Receipt

EFS ID:	32920188
Application Number:	15830549
International Application Number:	
Confirmation Number:	8998
Title of Invention:	SYSTEM AND METHOD OF PREDICTING HUMAN INTERACTION WITH VEHICLES
First Named Inventor/Applicant Name:	Sam ANTHONY
Customer Number:	23483
Filer:	Yvonne Shao-I Lee/Gerri Bellavia
Filer Authorized By:	Yvonne Shao-I Lee
Attorney Docket Number:	2210871.00123US2
Receipt Date:	18-JUN-2018
Filing Date:	04-DEC-2017
Time Stamp:	11:29:44
Application Type:	Utility under 35 USC 111(a)

Payment information:

Submitted with Payment	no

File Listing:

Document Number	Document Description	File Name	File Size(Bytes)/ Message Digest	Multi Part /.zip	Pages (if appl.)
1	Power of Attorney	123US2_POA.PDF	167475 88cd116e7693f1702cd99d3e5f43ad815ade6081	no	2

Warnings:

Information:	
Total Files Size (in bytes):	167475

This Acknowledgement Receipt evidences receipt on the noted date by the USPTO of the indicated documents, characterized by the applicant, and including page counts, where applicable. It serves as evidence of receipt similar to a Post Card, as described in MPEP 503.

New Applications Under 35 U.S.C. 111
If a new application is being filed and the application includes the necessary components for a filing date (see 37 CFR 1.53(b)-(d) and MPEP 506), a Filing Receipt (37 CFR 1.54) will be issued in due course and the date shown on this Acknowledgement Receipt will establish the filing date of the application.
National Stage of an International Application under 35 U.S.C. 371
If a timely submission to enter the national stage of an international application is compliant with the conditions of 35 U.S.C. 371 and other applicable requirements a Form PCT/DO/EO/903 indicating acceptance of the application as a national stage submission under 35 U.S.C. 371 will be issued in addition to the Filing Receipt, in due course.
New International Application Filed with the USPTO as a Receiving Office
If a new international application is being filed and the international application includes the necessary components for an international filing date (see PCT Article 11 and MPEP 1810), a Notification of the International Application Number and of the International Filing Date (Form PCT/RO/105) will be issued in due course, subject to prescriptions concerning national security, and the date shown on this Acknowledgement Receipt will establish the international filing date of the application.

UNITED STATES PATENT AND TRADEMARK OFFICE

UNITED STATES DEPARTMENT OF COMMERCE
United States Patent and Trademark Office
Address: COMMISSIONER FOR PATENTS
P.O. Box 1450
Alexandria, Virginia 22313-1450
www.uspto.gov

APPLICATION NUMBER	FILING OR 371(C) DATE	FIRST NAMED APPLICANT	ATTY. DOCKET NO./TITLE
15/830,549	12/04/2017	Sam ANTHONY	2210871.00123US2

CONFIRMATION NO. 8998

23483
WILMERHALE/BOSTON
60 STATE STREET
BOSTON, MA 02109

POA ACCEPTANCE LETTER

OC000000100423563

Date Mailed: 06/21/2018

NOTICE OF ACCEPTANCE OF POWER OF ATTORNEY

This is in response to the Power of Attorney filed 06/18/2018.

The Power of Attorney in this application is accepted. Correspondence in this application will be mailed to the above address as provided by 37 CFR 1.33.

Questions about the contents of this notice and the requirements it sets forth should be directed to the Office of Data Management, Application Assistance Unit, at **(571) 272-4000** or **(571) 272-4200** or **1-888-786-0101**.

/ggasgedom/

PTO/AIA/82A (07-13)
Approved for use through 01/31/2018. OMB 0651-0035
U.S. Patent and Trademark Office; U.S. DEPARTMENT OF COMMERCE
Under the Paperwork Reduction Act of 1995, no persons are required to respond to a collection of information unless it displays a valid OMB control number.

TRANSMITTAL FOR POWER OF ATTORNEY TO ONE OR MORE REGISTERED PRACTITIONERS

NOTE: This form is to be submitted with the Power of Attorney by Applicant form (PTO/AIA/82B) to identify the application to which the Power of Attorney is directed, in accordance with 37 CFR 1.5, unless the application number and filing date are identified in the Power of Attorney by Applicant form. If neither form PTO/AIA/82A nor form PTO/AIA82B identifies the application to which the Power of Attorney is directed, the Power of Attorney will not be recognized in the application.

Application Number	15/830,549
Filing Date	December 4, 2017
First Named Inventor	Sam Anthony
Title	System and Method of Predicting Human Interaction with Vehicles
Art Unit	Unknown
Examiner Name	Unknown
Attorney Docket Number	35447-42090/US

SIGNATURE of Applicant or Patent Practitioner

Signature	/Rajendra B. Panwar/	Date (Optional)	December 14, 2018
Name	Rajendra B. Panwar	Registration Number	63,165
Title (if Applicant is a juristic entity)	Attorney for Applicant		
Applicant Name (if Applicant is a juristic entity)	Perceptive Automata, Inc.		

NOTE: This form must be signed in accordance with 37 CFR 1.33. See 37 CFR 1.4(d) for signature requirements and certifications. If more than one applicant, use multiple forms.

☑ *Total of 1 forms are submitted.

This collection of information is required by 37 CFR 1.131, 1.32, and 1.33. The information is required to obtain or retain a benefit by the public which is to file (and by the USPTO to process) an application. Confidentiality is governed by 35 U.S.C. 122 and 37 CFR 1.11 and 1.14. This collection is estimated to take 3 minutes to complete, including gathering, preparing, and submitting the completed application form to the USPTO. Time will vary depending upon the individual case. Any comments on the amount of time you require to complete this form and/or suggestions for reducing this burden, should be sent to the Chief Information Officer, U.S. Patent and Trademark Office, U.S. Department of Commerce, P.O. Box 1450, Alexandria, VA 22313-1450. DO NOT SEND FEES OR COMPLETED FORMS TO THIS ADDRESS. **SEND TO: Commissioner for Patents, P.O. Box 1450, Alexandria, VA 22313-1450.**

If you need assistance in completing the form, call 1-800-PTO-9199 and select option 2.

Doc Code: PA..
Document Description: Power of Attorney

PTO/AIA/82B (07-13)
Approved for use through 01/31/2018. OMB 0651-0035
U.S. Patent and Trademark Office; U.S. DEPARTMENT OF COMMERCE
Under the Paperwork Reduction Act of 1995, no persons are required to respond to a collection of information unless it displays a valid OMB control number

POWER OF ATTORNEY BY APPLICANT

I hereby revoke all previous powers of attorney given in the application identified in either the attached transmittal letter or the boxes below.

Application Number	Filing Date

(Note: The boxes above may be left blank if information is provided on form PTO/AIA/82A.)

☑ I hereby appoint the Patent Practitioner(s) associated with the following Customer Number as my/our attorney(s) or agent(s), and to transact all business in the United States Patent and Trademark Office connected therewith for the application referenced in the attached transmittal letter (form PTO/AIA/82A) or identified above: 00758

OR

☐ I hereby appoint Practitioner(s) named in the attached list (form PTO/AIA/82C) as my/our attorney(s) or agent(s), and to transact all business in the United States Patent and Trademark Office connected therewith for the patent application referenced in the attached transmittal letter (form PTO/AIA/82A) or identified above. (Note: Complete form PTO/AIA/82C.)

Please recognize or change the correspondence address for the application identified in the attached transmittal letter or the boxes above to:

☑ The address associated with the above-mentioned Customer Number

OR

☐ The address associated with Customer Number:

OR

☐ Firm or Individual Name					
Address					
City		State		Zip	
Country					
Telephone		Email			

I am the Applicant (if the Applicant is a juristic entity, list the Applicant name in the box):

PERCEPTIVE AUTOMATA, INC.

☐ Inventor or Joint Inventor (title not required below)

☐ Legal Representative of a Deceased or Legally Incapacitated Inventor (title not required below)

☑ Assignee or Person to Whom the Inventor is Under an Obligation to Assign (provide signer's title if applicant is a juristic entity)

☐ Person Who Otherwise Shows Sufficient Proprietary Interest (e.g., a petition under 37 CFR 1.46(b)(2) was granted in the application or is concurrently being filed with this document) (provide signer's title if applicant is a juristic entity)

SIGNATURE of Applicant for Patent

The undersigned (whose title is supplied below) is authorized to act on behalf of the applicant (e.g., where the applicant is a juristic entity).

Signature		Date (Optional)	
Name	Kshitij "Sid" Misra		
Title	Chief Executive Officer		

NOTE: Signature - This form must be signed by the applicant in accordance with 37 CFR 1.33. See 37 CFR 1.4 for signature requirements and certifications. If more than one applicant, use multiple forms.

☑ Total of 1 forms are submitted.

This collection of information is required by 37 CFR 1.131, 1.32, and 1.33. The information is required to obtain or retain a benefit by the public which is to file (and by the USPTO to process) an application. Confidentiality is governed by 35 U.S.C. 122 and 37 CFR 1.11 and 1.14. This collection is estimated to take 3 minutes to complete, including gathering, preparing, and submitting the completed application form to the USPTO. Time will vary depending upon the individual case. Any comments on the amount of time you require to complete this form and/or suggestions for reducing this burden, should be sent to the Chief Information Officer, U.S. Patent and Trademark Office, U.S. Department of Commerce, P.O. Box 1450, Alexandria, VA 22313-1450. DO NOT SEND FEES OR COMPLETED FORMS TO THIS ADDRESS. **SEND TO: Commissioner for Patents, P.O. Box 1450, Alexandria, VA 22313-1450.**

If you need assistance in completing the form, call 1-800-PTO-9199 and select option 2.

Electronic Acknowledgement Receipt

EFS ID:	34594786
Application Number:	15830549
International Application Number:	
Confirmation Number:	8998
Title of Invention:	SYSTEM AND METHOD OF PREDICTING HUMAN INTERACTION WITH VEHICLES
First Named Inventor/Applicant Name:	Sam ANTHONY
Customer Number:	23483
Filer:	Rajendra Bhagwatisingh Panwar
Filer Authorized By:	
Attorney Docket Number:	2210871.00123US2
Receipt Date:	14-DEC-2018
Filing Date:	04-DEC-2017
Time Stamp:	20:45:07
Application Type:	Utility under 35 USC 111(a)

Payment information:

Submitted with Payment	no

File Listing:

Document Number	Document Description	File Name	File Size(Bytes)/ Message Digest	Multi Part /.zip	Pages (if appl.)
1	Power of Attorney	42090_Power_of_Attorney.pdf	716915 24cdfec140adc5b7eb8aed8fcd28c54b82a9ae30	no	2

Warnings:

Information:	
Total Files Size (in bytes):	716915

This Acknowledgement Receipt evidences receipt on the noted date by the USPTO of the indicated documents, characterized by the applicant, and including page counts, where applicable. It serves as evidence of receipt similar to a Post Card, as described in MPEP 503.

New Applications Under 35 U.S.C. 111
If a new application is being filed and the application includes the necessary components for a filing date (see 37 CFR 1.53(b)-(d) and MPEP 506), a Filing Receipt (37 CFR 1.54) will be issued in due course and the date shown on this Acknowledgement Receipt will establish the filing date of the application.
National Stage of an International Application under 35 U.S.C. 371
If a timely submission to enter the national stage of an international application is compliant with the conditions of 35 U.S.C. 371 and other applicable requirements a Form PCT/DO/EO/903 indicating acceptance of the application as a national stage submission under 35 U.S.C. 371 will be issued in addition to the Filing Receipt, in due course.
New International Application Filed with the USPTO as a Receiving Office
If a new international application is being filed and the international application includes the necessary components for an international filing date (see PCT Article 11 and MPEP 1810), a Notification of the International Application Number and of the International Filing Date (Form PCT/RO/105) will be issued in due course, subject to prescriptions concerning national security, and the date shown on this Acknowledgement Receipt will establish the international filing date of the application.

UNITED STATES PATENT AND TRADEMARK OFFICE

UNITED STATES DEPARTMENT OF COMMERCE
United States Patent and Trademark Office
Address: COMMISSIONER FOR PATENTS
P.O. Box 1450
Alexandria, Virginia 22313-1450
www.uspto.gov

APPLICATION NUMBER	FILING OR 371(C) DATE	FIRST NAMED APPLICANT	ATTY. DOCKET NO./TITLE
15/830,549	12/04/2017	Sam ANTHONY	2210871.00123US2

CONFIRMATION NO. 8998

23483
WILMERHALE/BOSTON
60 STATE STREET
BOSTON, MA 02109

MISCELLANEOUS NOTICE

OC000000104554336

Date Mailed: 12/19/2018

A communication which cannot be delivered in electronic form has been mailed to the applicant.

Doc Code: N572

UNITED STATES PATENT AND TRADEMARK OFFICE

UNITED STATES DEPARTMENT OF COMMERCE
United States Patent and Trademark Office
Address: COMMISSIONER FOR PATENTS
P.O. Box 1450
Alexandria, Virginia 22313-1450
www.uspto.gov

APPLICATION NUMBER	FILING DATE	FIRST NAMED APPLICANT	ATTY. DOCKET NO./TITLE
15/830,549	12/04/2017	Sam ANTHONY	2210871.00123US2

CONFIRMATION NO. 8998

OC000000104554336

23483
WILMERHALE/BOSTON
60 STATE STREET
BOSTON, MA 02109

Cc: FENWICK & WEST LLP
SILICON VALLEY CENTER
801 CALIFORNIA STREET
MOUNTAIN VIEW, CA 94041

Date Mailed: **12/19/2018**

DENIAL OF REQUEST FOR POWER OF ATTORNEY

The request for Power of Attorney filed **12/14/2018** is acknowledged. However, the request cannot be granted at this time for the reason stated below.

- ☐ The Power of Attorney you provided did not comply with the new Power of Attorney rules that became effective on June 25, 2004. See 37 CFR 1.32.
- ☐ The revocation is not signed by the applicant, the assignee of the entire interest, or one particular principal attorney having the authority to revoke.
- ☐ The Power of Attorney is from an assignee and the Certificate required by 37 CFR 3.73 has not been received.
- ☐ The person signing for the assignee has omitted their empowerment to sign on behalf of the assignee.
- ☐ The inventor(s) is without authority to appoint attorneys since the assignee has intervened as provided by 37 CFR 3.71.
- ☐ The signature(s) of , co-inventors in this application, has been omitted. The Power of Attorney will be entered upon receipt of confirmation signed by said co-inventor(s).
- ☐ The person(s) appointed in the Power of Attorney is not registered to practice before the U.S. Patent and Trademark Office.
- ☐ Only one Customer Number can be designated for the Power of Attorney in an application. The Customer Number that was captured is the first Customer Number provided on the Power of Attorney document.

UNITED STATES PATENT AND TRADEMARK OFFICE

UNITED STATES DEPARTMENT OF COMMERCE
United States Patent and Trademark Office
Address: COMMISSIONER FOR PATENTS
P.O. Box 1450
Alexandria, Virginia 22313-1450
www.uspto.gov

- ☐ A request under 37 CFR 1.48 to add an inventor was granted in this application, however, no power of attorney consistent with the power of attorney granted by the originally named inventive entity has been received. Thus, the addition of the inventor has resulted in the loss of power of attorney in the application. See 37 CFR 1.32(e).

- ☒ The power of attorney has not been accepted because the party who is giving power of attorney has not been identified. Power of attorney may only be signed by the applicant for patent (37 CFR 1.42) or the patent owner. A patent owner who was not the applicant must appoint any power of attorney in compliance with 37 CFR 3.71 and 3.73. See 37 CFR 1.32(b)(4).

- ☐ The power of attorney from the inventors has not been accepted because it is a copy from a prior national application for which benefit is claimed and the continuing application names an inventor who was not named as an inventor in the prior application.

- ☐ The power of attorney from the inventors has not been accepted because the power of attorney must be signed by the applicant for patent. See 37 CFR 1.32(b)(4).

- ☒ Any request to correct or update the name of the applicant must include an application data sheet (ADS) in compliance with 37 CFR 1.76 specifying the correct or updated name of the applicant in the applicant information section. Any request to change the applicant after an original applicant has been specified under 37 CFR 1.46(b) must include a new ADS in compliance with 37 CFR 1.76 specifying the applicant in the applicant information section and comply with 37 CFR 3.71 and 3.73. See 37 CFR 1.46(c).

Any inquiries regarding this notice should be directed to the Application Assistance Unit at 571-272-4200.

Application Assistance Unit
571-272-4200

UNITED STATES PATENT AND TRADEMARK OFFICE

UNITED STATES DEPARTMENT OF COMMERCE
United States Patent and Trademark Office
Address: COMMISSIONER FOR PATENTS
P.O. Box 1450
Alexandria, Virginia 22313-1450
www.uspto.gov

APPLICATION NUMBER	FILING OR 371(C) DATE	FIRST NAMED APPLICANT	ATTY. DOCKET NO./TITLE
15/830,549	12/04/2017	Sam ANTHONY	2210871.00123US2

CONFIRMATION NO. 8998

23483
WILMERHALE/BOSTON
60 STATE STREET
BOSTON, MA 02109

PUBLICATION NOTICE

OC000000105011664

Title:SYSTEM AND METHOD OF PREDICTING HUMAN INTERACTION WITH VEHICLES

Publication No.US-2019-0012574-A1
Publication Date:01/10/2019

NOTICE OF PUBLICATION OF APPLICATION

The above-identified application will be electronically published as a patent application publication pursuant to 37 CFR 1.211, et seq. The patent application publication number and publication date are set forth above.

The publication may be accessed through the USPTO's publically available Searchable Databases via the Internet at www.uspto.gov. The direct link to access the publication is currently http://www.uspto.gov/patft/.

The publication process established by the Office does not provide for mailing a copy of the publication to applicant. A copy of the publication may be obtained from the Office upon payment of the appropriate fee set forth in 37 CFR 1.19(a)(1). Orders for copies of patent application publications are handled by the USPTO's Public Records Division. The Public Records Division can be reached by telephone at (571) 272-3150 or (800) 972-6382, by facsimile at (571) 273-3250, by mail addressed to the United States Patent and Trademark Office, Public Records Division, Alexandria, VA 22313-1450 or via the Internet.

In addition, information on the status of the application, including the mailing date of Office actions and the dates of receipt of correspondence filed in the Office, may also be accessed via the Internet through the Patent Electronic Business Center at www.uspto.gov using the public side of the Patent Application Information and Retrieval (PAIR) system. The direct link to access this status information is currently https://portal.uspto.gov/pair/PublicPair. Prior to publication, such status information is confidential and may only be obtained by applicant using the private side of PAIR.

Further assistance in electronically accessing the publication, or about PAIR, is available by calling the Patent Electronic Business Center at 1-866-217-9197.

Office of Data Managment, Application Assistance Unit (571) 272-4000, or (571) 272-4200, or 1-888-786-0101

INFORMATION DISCLOSURE STATEMENT BY APPLICANT (Not for submission under 37 CFR 1.99)				Complete if Known	
				Application Number	15/830,549
				Filing Date	December 4, 2017
				First Named Inventor	Sam ANTHONY
				Applicant	Perceptive Automata
				Art Unit	2664
				Confirmation Number	8998
				Examiner Name	Charlotte M. Baker
Sheet	1	of	3	Attorney Docket Number	35447-42090/US

U.S. PATENT DOCUMENTS				
		Document No.		
Examiner Initials*	Cite No.[1]	Number – Kind Code[2] (if known)	Publication Date MM-DD-YYYY	Name of Patentee or Applicant of Cited Document
	A1	US 2017/0270374 A1	09-21-2017	Ford Global Technologies, LLC
	A2	US 2017/0153639 A1	06-01-2017	MOBILEYE VISION TECHNOLOGIES LTD.
	A3	US 2015/0213555 A1	07-30-2015	HTI IP, LLC

FOREIGN PATENT DOCUMENTS					
		Foreign Patent Document			
Examiner Initials*	Cite No.[1]	Country Code[3] – Number[4] Kind Code[5] (if known)	Publication Date MM-DD-YYYY	Name of Patentee or Applicant of Cited Document	T[6]
	B1				

OTHER REFERENCES – NON-PATENT LITERATURE DOCUMENTS			
Examiner Initials*	Cite No.[1]	Include name of the author (in CAPITAL LETTERS), title of the article (when appropriate), title of the item (book, magazine, journal, serial, symposium, catalog, etc.), date, page(s), volume-issue number(s), publisher, city and/or country where published	T[6]
	C1	International Search Report and Written Opinion, PCT Application No. PCT/US2018/063459, February 7, 2019, 13 pages.	
	C2	GIRDHAR, R. and RAMANAN, D., "Attentional Pooling for Action Recognition," 31st Conference on Neural Information Processing Systems (NIPS 2017), 12 pages.	
	C3	HE, K., et al. "Mask R-CNN," Computer Vision and Pattern Recognition 1703.06870v3, January 24, 2018, 12 pages.	
	C4	KARMARKAR, T., "Regional Proposal network (RPN)- Backbone of Faster R-CNN," August 18, 2018, 6 pages, [Online][Retrieved January 5, 2019], Retrieved from the internet <URL:https://medium.com/@tanaykarmarkar/region-proposal-network-rpn-bac>.	
	C5	KOTSERUBA, I., et al., "Joint Attention in Autonomous Driving (JADD),' Robotics 1609.04741v5, April 24, 2017, 10 pages.	
	C6	NEWELL, A., et al., "Stacked Hourglass Networks for Human Pose Estimation," Computer Vision and Pattern Recognition 1603.06937v2, July 26, 2016, 17 pages.	

EXAMINER SIGNATURE	
Examiner Signature	
Date Considered	

*EXAMINER: Initial if reference considered, whether or not citation is in conformance with MPEP 609. Draw line through a citation if not in conformance and not considered. Include copy of this form with next communication to applicant.

[1] Applicant's unique citation designation number (option). [2] See Kind Codes of USPTO Patent Documents at www.USPTO.GOV or MPEP 901.04. [3] Enter office that issued the document, by the two-letter code (WIPO Standard ST.3). [4] For Japanese patent documents, the indication of the year of the reign of the Emperor must precede the serial number of the patent document.

[5] Kind of document by the appropriate symbols as indicated on the document under WIPO Standard ST.16 if possible. [6] Applicant is to place a check mark here if English language translation is attached.

INFORMATION DISCLOSURE STATEMENT BY APPLICANT (Not for submission under 37 CFR 1.99)				Complete if Known	
				Application Number	15/830,549
				Filing Date	December 4, 2017
				First Named Inventor	Sam ANTHONY
				Applicant	Perceptive Automata
				Art Unit	2664
				Confirmation Number	8998
				Examiner Name	Charlotte M. Baker
Sheet	2	of	3	Attorney Docket Number	35447-42090/US

OTHER REFERENCES – NON-PATENT LITERATURE DOCUMENTS			
Examiner Initials*	Cite No.[1]	Include name of the author (in CAPITAL LETTERS), title of the article (when appropriate), title of the item (book, magazine, journal, serial, symposium, catalog, etc.), date, page(s), volume-issue number(s), publisher, city and/or country where published	T[6]
	C7	REN, S. et al. "Faster R-CNN: Towards Real-Time Object Detection with Region Proposal Networks," Advances in Neural Information Processing Systems 28 (NIPS 2015), 9 pages.	
	C8	REN, S. et al. "Faster R-CNN: Towards Real-Time Object Detection with Region Proposal Networks," Computer Vision and Patteren Recognition 1506.01497v3, January 6, 2016, 14 pages.	
	C9	SANTORO, A. et al., "A neural approach to relational reasoning," June 6, 2017, 6 pages, [Online][Retrieved January 5, 2019], Retrieved from the internet <URL:https://deepmind.com/blog/neural-approach-relational-reasoning/>.	
	C10	SANTORO, A. et al., "A simple neural network module for relational reasoning," Computation and Language 1706.01427, June 5, 2017, 16 pages.	
	C11	SCHNEEMANN, F., et al., "Context-based Detection of Pedestrian Crossing Intention for Autonomous Driving in Urban Environments," 2016 IEEE/RSJ International Conference on Intelligent Robots and Systems (IROS), October 2016, 6 pages.	
	C12	WATTERS, N., et al., " Visual Interaction Networks," Computer Vision and Pattern Recognition 1706.01433v1, June 5, 2017, 14 pages.	
	C13	ZHAO, H., et al., "Pyramid Scheme Parsing Network," Computer Vision and Pattern Recognition 1612.01105v2, April 27, 2017, 11 pages.	

EXAMINER SIGNATURE	
Examiner Signature	
Date Considered	

*EXAMINER: Initial if reference considered, whether or not citation is in conformance with MPEP 609. Draw line through a citation if not in conformance and not considered. Include copy of this form with next communication to applicant.

[1] Applicant's unique citation designation number (option). [2] See Kind Codes of USPTO Patent Documents at www.USPTO.GOV or MPEP 901.04. [3] Enter office that issued the document, by the two-letter code (WIPO Standard ST.3). [4] For Japanese patent documents, the indication of the year of the reign of the Emperor must precede the serial number of the patent document.

[5] Kind of document by the appropriate symbols as indicated on the document under WIPO Standard ST.16 if possible. [6] Applicant is to place a check mark here if English language translation is attached.

INFORMATION DISCLOSURE STATEMENT BY APPLICANT (Not for submission under 37 CFR 1.99)				Complete if Known	
				Application Number	15/830,549
				Filing Date	December 4, 2017
				First Named Inventor	Sam ANTHONY
				Applicant	Perceptive Automata
				Art Unit	2664
				Confirmation Number	8998
				Examiner Name	Charlotte M. Baker
Sheet	3	of	3	Attorney Docket Number	35447-42090/US

CERTIFICATION STATEMENT

Please see 37 CFR 1.97 and 1.98 to make the appropriate selection(s):

☐ That each item of information contained in the information disclosure statement was first cited in any communication from a foreign patent office in a counterpart foreign application not more than three months prior to the filing of the information disclosure statement. See 37 CFR 1.97(e)(1).

OR

☐ That no item of information contained in the information disclosure statement was cited in a communication from a foreign patent office in a counterpart foreign application, and, to the knowledge of the person signing the certification after making reasonable inquiry, no item of information contained in the information disclosure statement was known to any individual designated in 37 CFR 1.56(c) more than three months prior to the filing of the information disclosure statement. See 37 CFR 1.97(e)(2).

☐ See attached certification statement.

☐ The fee set forth in 37 CFR 1.17 (p) has been submitted herewith.

☒ A certification statement is not submitted herewith.

SIGNATURE

A signature of the applicant or representative is required in accordance with CFR 1.33, 10.18. Please see CFR 1.4(d) for the form of the signature.

Signature	/ Rajendra B. Panwar/	Date (YYYY-MM-DD)	April 3, 2019
Name/Print	Rajendra B. Panwar	Registration Number	63,165

RECEIVED
PATENT DOCKETING
FEB 12 2019
PCT Fenwick & West

PATENT COOPERATION TREATY

From the INTERNATIONAL SEARCHING AUTHORITY

To: RAJENDRA B. PANWAR
FENWICK & WEST LLP
801 CALIFORNIA STREET
MOUNTAIN VIEW, CA 94041

NOTIFICATION OF TRANSMITTAL OF THE INTERNATIONAL SEARCH REPORT AND THE WRITTEN OPINION OF THE INTERNATIONAL SEARCHING AUTHORITY, OR THE DECLARATION

(PCT Rule 44.1)

	Date of mailing *(day/month/year)* 07 FEB 2019
Applicant's or agent's file reference 35447-42090/WO	**FOR FURTHER ACTION** See paragraphs 1 and 4 below
International application No. PCT/US2018/063459	International filing date *(day/month/year)* 30 November 2018
Applicant PERCEPTIVE AUTOMATA, INC.	

1. ☒ The applicant is hereby notified that the international search report and the written opinion of the International Searching Authority have been established and are transmitted herewith.

   Filing of amendments and statement under Article 19:
   The applicant is entitled, if he so wishes, to amend the claims of the international application (see Rule 46):

   When? The time limit for filing such amendments is normally two months from the date of transmittal of the international search report.

   How? Directly to the International Bureau of WIPO preferably through ePCT or on paper to, 34 chemin des Colombettes 1211 Geneva 20, Switzerland, Facsimile No.: +41 22 338 82 70

   For more detailed instructions, see *PCT Applicant's Guide*, International Phase, paragraphs 9.004 – 9.011.

2. ☐ The applicant is hereby notified that no international search report will be established and that the declaration under Article 17(2)(a) to that effect and the written opinion of the International Searching Authority are transmitted herewith.

3. ☐ **With regard to any protest** against payment of (an) additional fee(s) under Rule 40.2, the applicant is notified that:

   ☐ the protest together with the decision thereon has been transmitted to the International Bureau together with any request to forward the texts of both the protest and the decision thereon to the designated Offices.

   ☐ no decision has been made yet on the protest; the applicant will be notified as soon as a decision is made.

4. **Reminders**

   The applicant may **submit comments on an informal basis on the written opinion of the International Searching Authority** to the International Bureau. These comments will be made available to the public after international publication. The International Bureau will send a copy of such comments to all designated Offices unless an international preliminary examination report has been or is to be established.

   Shortly after the expiration of **18 months from the priority date, the international application will be published** by the International Bureau. If the applicant wishes to avoid or postpone publication, a notice of withdrawal of the international application, or of the priority claim, must reach the International Bureau before the completion of the technical preparations for international publication (Rules 90*bis*.1 and 90*bis*.3).

   Within **19 months** from the priority date, but only in respect of some designated Offices, a demand for international preliminary examination must be filed if the applicant wishes to postpone the entry into the national phase **until 30 months** from the priority date (in some Offices even later); otherwise, the applicant must, **within 20 months** from the priority date, perform the prescribed acts for **entry into the national phase** before those designated Offices. In respect of other designated Offices, the time limit of **30 months** (or later) will apply even if no demand is filed within 19 months. For details about the applicable time limits, Office by Office, see www.wipo.int/pct/en/texts/time_limits.html and the *PCT Applicant's Guide*, National Chapters.

   Within **22 months from the priority date, the applicant may request that a supplementary international search be carried out** by a different International Searching Authority that offers this service (Rule 45*bis*.1). The procedure for requesting supplementary international search is described in the *PCT Applicant's Guide*, International Phase, paragraphs 8.006-8.032.

Name and mailing address of the ISA/US Mail Stop PCT, Attn: ISA/US Commissioner for Patents P.O. Box 1450, Alexandria, VA 22313-1450 Facsimile No. 571-273-8300	Authorized officer Blaine R. Copenheaver PCT Helpdesk: 571-272-4300 Telephone No. PCT OSP: 571-272-7774

Form PCT/ISA/220 (July 2017)

PATENT COOPERATION TREATY

From the INTERNATIONAL SEARCHING AUTHORITY

To: RAJENDRA B. PANWAR
FENWICK & WEST LLP
801 CALIFORNIA STREET
MOUNTAIN VIEW, CA 94041

PCT

NOTIFICATION OF TRANSMITTAL OF THE INTERNATIONAL SEARCH REPORT AND THE WRITTEN OPINION OF THE INTERNATIONAL SEARCHING AUTHORITY, OR THE DECLARATION

(PCT Rule 44.1)

	Date of mailing *(day/month/year)*
Applicant's or agent's file reference 35447-42090/WO	**FOR FURTHER ACTION** See paragraphs 1 and 4 below
International application No. PCT/US2018/063459	International filing date *(day/month/year)* 30 November 2018
Applicant PERCEPTIVE AUTOMATA, INC.	

1. ☒ The applicant is hereby notified that the international search report and the written opinion of the International Searching Authority have been established and are transmitted herewith.

   Filing of amendments and statement under Article 19:
   The applicant is entitled, if he so wishes, to amend the claims of the international application (see Rule 46):

   When? The time limit for filing such amendments is normally two months from the date of transmittal of the international search report.

   How? Directly to the International Bureau of WIPO preferably through ePCT or on paper to, 34 chemin des Colombettes 1211 Geneva 20, Switzerland, Facsimile No.: +41 22 338 82 70

   For more detailed instructions, see *PCT Applicant's Guide*, International Phase, paragraphs 9.004 – 9.011.

2. ☐ The applicant is hereby notified that no international search report will be established and that the declaration under Article 17(2)(a) to that effect and the written opinion of the International Searching Authority are transmitted herewith.

3. ☐ **With regard to any protest** against payment of (an) additional fee(s) under Rule 40.2, the applicant is notified that:

   ☐ the protest together with the decision thereon has been transmitted to the International Bureau together with any request to forward the texts of both the protest and the decision thereon to the designated Offices.

   ☐ no decision has been made yet on the protest; the applicant will be notified as soon as a decision is made.

4. **Reminders**

   The applicant may **submit comments on an informal basis on the written opinion of the International Searching Authority** to the International Bureau. These comments will be made available to the public after international publication. The International Bureau will send a copy of such comments to all designated Offices unless an international preliminary examination report has been or is to be established.

   Shortly after the expiration of **18 months from the priority date, the international application will be published** by the International Bureau. If the applicant wishes to avoid or postpone publication, a notice of withdrawal of the international application, or of the priority claim, must reach the International Bureau before the completion of the technical preparations for international publication (Rules 90*bis*.1 and 90*bis*.3).

   Within **19 months** from the priority date, but only in respect of some designated Offices, a demand for international preliminary examination must be filed if the applicant wishes to postpone the entry into the national phase **until 30 months** from the priority date (in some Offices even later); otherwise, the applicant must, **within 20 months** from the priority date, perform the prescribed acts for **entry into the national phase** before those designated Offices. In respect of other designated Offices, the time limit of **30 months** (or later) will apply even if no demand is filed within 19 months. For details about the applicable time limits, Office by Office, see www.wipo.int/pct/en/texts/time_limits.html and the *PCT Applicant's Guide*, National Chapters.

   Within **22 months from the priority date, the applicant may request that a supplementary international search be carried** out by a different International Searching Authority that offers this service (Rule 45*bis*.1). The procedure for requesting supplementary international search is described in the *PCT Applicant's Guide*, International Phase, paragraphs 8.006-8.032.

Name and mailing address of the ISA/US Mail Stop PCT, Attn: ISA/US Commissioner for Patents P.O. Box 1450, Alexandria, VA 22313-1450 Facsimile No. 571-273-8300	Authorized officer Blaine R. Copenheaver PCT Helpdesk: 571-272-4300 Telephone No. PCT OSP: 571-272-7774

Form PCT/ISA/220 (July 2017)

PATENT COOPERATION TREATY

PCT

INTERNATIONAL SEARCH REPORT

(PCT Article 18 and Rules 43 and 44)

Applicant's or agent's file reference 35447-42090/WO	FOR FURTHER ACTION	see Form PCT/ISA/220 as well as, where applicable, item 5 below.
International application No. PCT/US2018/063459	International filing date *(day/month/year)* 30 November 2018	(Earliest) Priority Date *(day/month/year)* 04 December 2017
Applicant PERCEPTIVE AUTOMATA, INC.		

This international search report has been prepared by this International Searching Authority and is transmitted to the applicant according to Article 18. A copy is being transmitted to the International Bureau.

This international search report consists of a total of 2 sheets.

☐ It is also accompanied by a copy of each prior art document cited in this report.

1. **Basis of the report**
   a. With regard to the **language**, the international search was carried out on the basis of:
      ☒ the international application in the language in which it was filed.
      ☐ a translation of the international application into _____ which is the language of a translation furnished for the purposes of international search (Rules 12.3(a) and 23.1(b)).
   b. ☐ This international search report has been established taking into account the **rectification of an obvious mistake** authorized by or notified to this Authority under Rule 91 (Rule 43.6*bis*(a)).
   c. ☐ With regard to any **nucleotide and/or amino acid sequence** disclosed in the international application, see Box No. I.

2. ☐ **Certain claims were found unsearchable** (see Box No. II).

3. ☐ **Unity of invention is lacking** (see Box No. III).

4. With regard to the **title**,
   ☒ the text is approved as submitted by the applicant.
   ☐ the text has been established by this Authority to read as follows:

5. With regard to the **abstract**,
   ☒ the text is approved as submitted by the applicant.
   ☐ the text has been established, according to Rule 38.2, by this Authority as it appears in Box No. IV. The applicant may, within one month from the date of mailing of this international search report, submit comments to this Authority.

6. With regard to the **drawings**,
   a. the figure of the **drawings** to be published with the abstract is Figure No. 10
      ☒ as suggested by the applicant.
      ☐ as selected by this Authority, because the applicant failed to suggest a figure.
      ☐ as selected by this Authority, because this figure better characterizes the invention.
   b. ☐ none of the figures is to be published with the abstract.

INTERNATIONAL SEARCH REPORT

International application No.
PCT/US2019/063459

A. CLASSIFICATION OF SUBJECT MATTER

IPC(8) - G06K 9/00; B60W 30/08; B60W 30/095; B60W 30/16; G05D 1/00; G05D 1/02 (2019.01)

CPC - G06K 9/00805; B60Q 9/00; B60W 30/0956; B60W 30/16; G05D 1/0088; G05D 2201/0213; G06K 9/00718; G06K 9/6254; G06K 9/6256; G06N 3/04; G06N 3/08; G06N 3/084; G08G 1/04; G08G 1/166; H04W 4/046 (2019.01)

According to International Patent Classification (IPC) or to both national classification and IPC

B. FIELDS SEARCHED

Minimum documentation searched (classification system followed by classification symbols)

See Search History document

Documentation searched other than minimum documentation to the extent that such documents are included in the fields searched

USPC - 701/28; 706/12; 706/25 (keyword delimited)

Electronic data base consulted during the international search (name of data base and, where practicable, search terms used)

See Search History document

C. DOCUMENTS CONSIDERED TO BE RELEVANT

Category*	Citation of document, with indication, where appropriate, of the relevant passages	Relevant to claim No.
X	US 2017/0153639 A1 (MOBILEYE VISION TECHNOLOGIES LTD.) 01 June 2017 (01.06.2017) entire document	1-20
A	US 2017/0270374 A1 (FORD GLOBAL TECHNOLOGIES, LLC) 21 September 2017 (21.09.2017) entire document	1-20
A	US 2015/0213555 A1 (HTI IP, LLC) 30 July 2015 (30.07.2015) entire document	1-20

☐ Further documents are listed in the continuation of Box C. ☐ See patent family annex.

* Special categories of cited documents:

"A" document defining the general state of the art which is not considered to be of particular relevance

"E" earlier application or patent but published on or after the international filing date

"L" document which may throw doubts on priority claim(s) or which is cited to establish the publication date of another citation or other special reason (as specified)

"O" document referring to an oral disclosure, use, exhibition or other means

"P" document published prior to the international filing date but later than the priority date claimed

"T" later document published after the international filing date or priority date and not in conflict with the application but cited to understand the principle or theory underlying the invention

"X" document of particular relevance; the claimed invention cannot be considered novel or cannot be considered to involve an inventive step when the document is taken alone

"Y" document of particular relevance; the claimed invention cannot be considered to involve an inventive step when the document is combined with one or more other such documents, such combination being obvious to a person skilled in the art

"&" document member of the same patent family

Date of the actual completion of the international search	Date of mailing of the international search report
23 January 2019	07 FEB 2019
Name and mailing address of the ISA/US Mail Stop PCT, Attn: ISA/US, Commissioner for Patents P.O. Box 1450, Alexandria, VA 22313-1450 Facsimile No. 571-273-8300	Authorized officer Blaine R. Copenheaver PCT Helpdesk: 571-272-4300 PCT OSP: 571-272-7774

PATENT COOPERATION TREATY

From the
INTERNATIONAL SEARCHING AUTHORITY

To: RAJENDRA B. PANWAR
FENWICK & WEST LLP
801 CALIFORNIA STREET
MOUNTAIN VIEW, CA 94041

PCT

WRITTEN OPINION OF THE
INTERNATIONAL SEARCHING AUTHORITY

(PCT Rule 43*bis*.1)

Date of mailing *(day/month/year)* 07 FEB 2019

Applicant's or agent's file reference
35447-42090/WO

FOR FURTHER ACTION
See paragraph 2 below

International application No.	International filing date *(day/month/year)*	Priority date *(day/month/year)*
PCT/US2018/063459	30 November 2018	04 December 2017

International Patent Classification (IPC) or both national classification and IPC
IPC(8) - G06K 9/00; B60W 30/08; B60W 30/095; B60W 30/16; G05D 1/00; G05D 1/02 (2019.01)
CPC - G06K 9/00805; B60Q 9/00; B60W 30/0956; B60W 30/18; G05D 1/0088; G05D 2201/0213; G06K 9/00718; G06K 9/6254; G06K 9/6256; G06N 3/04; G06N 3/08; G06N 3/084; G08G 1/04; G08G 1/166; H04W 4/046 (2019.01)

Applicant PERCEPTIVE AUTOMATA, INC.

1. This opinion contains indications relating to the following items:

- [x] Box No. I Basis of the opinion
- [ ] Box No. II Priority
- [ ] Box No. III Non-establishment of opinion with regard to novelty, inventive step and industrial applicability
- [ ] Box No. IV Lack of unity of invention
- [x] Box No. V Reasoned statement under Rule 43*bis*.1(a)(i) with regard to novelty, inventive step and industrial applicability; citations and explanations supporting such statement
- [ ] Box No. VI Certain documents cited
- [ ] Box No. VII Certain defects in the international application
- [ ] Box No. VIII Certain observations on the international application

2. **FURTHER ACTION**

If a demand for international preliminary examination is made, this opinion will be considered to be a written opinion of the International Preliminary Examining Authority ("IPEA") except that this does not apply where the applicant chooses an Authority other than this one to be the IPEA and the chosen IPEA has notified the International Bureau under Rule 66.1*bis*(b) that written opinions of this International Searching Authority will not be so considered.

If this opinion is, as provided above, considered to be a written opinion of the IPEA, the applicant is invited to submit to the IPEA a written reply together, where appropriate, with amendments, before the expiration of 3 months from the date of mailing of Form PCT/ISA/220 or before the expiration of 22 months from the priority date, whichever expires later.

For further options, see Form PCT/ISA/220.

Name and mailing address of the ISA/US	Date of completion of this opinion	Authorized officer
Mail Stop PCT, Attn: ISA/US Commissioner for Patents P.O. Box 1450, Alexandria, VA 22313-1450 Facsimile No. 571-273-8300	23 January 2019	Blaine R. Copenheaver PCT Helpdesk: 571-272-4300 PCT OSP: 571-272-7774

Form PCT/ISA/237 (cover sheet) (January 2015)

WRITTEN OPINION OF THE
INTERNATIONAL SEARCHING AUTHORITY

International application No.
PCT/US2018/063459

Box No. I **Basis of this opinion**

1. With regard to the language, this opinion has been established on the basis of:

   [X] the international application in the language in which it was filed.

   [ ] a translation of the international application into _____ which is the language of a translation furnished for the purposes of international search (Rules 12.3(a) and 23.1(b)).

2. [ ] This opinion has been established taking into account the rectification of an obvious mistake authorized by or notified to this Authority under Rule 91 (Rule 43*bis*.1(a)).

3. [ ] With regard to any nucleotide and/or amino acid sequence disclosed in the international application, this opinion has been established on the basis of a sequence listing:

   a. [ ] forming part of the international application as filed:

      [ ] in the form of an Annex C/ST.25 text file.

      [ ] on paper or in the form of an image file.

   b. [ ] furnished together with the international application under PCT Rule 13*ter*.1(a) for the purposes of international search only in the form of an Annex C/ST.25 text file.

   c. [ ] furnished subsequent to the international filing date for the purposes of international search only:

      [ ] in the form of an Annex C/ST.25 text file (Rule 13*ter*.1(a)).

      [ ] on paper or in the form of an image file (Rule 13*ter*.1(b) and Administrative Instructions, Section 713).

4. [ ] In addition, in the case that more than one version or copy of a sequence listing has been filed or furnished, the required statements that the information in the subsequent or additional copies is identical to that forming part of the application as filed or does not go beyond the application as filed, as appropriate, were furnished.

5. Additional comments:

Box No. V **Reasoned statement under Rule 43*bis*.1(a)(i) with regard to novelty, inventive step and industrial applicability; citations and explanations supporting such statement**

1. Statement

Novelty (N)	Claims	None	YES
	Claims	1-20	NO
Inventive step (IS)	Claims	None	YES
	Claims	1-20	NO
Industrial applicability (IA)	Claims	1-20	YES
	Claims	None	NO

2. Citations and explanations:

Claims 1-20 lack novelty under PCT Article 33(2) as being anticipated by Mobileye Vision Technologies Ltd. (hereinafter Mobileye).

Regarding Claim 1, Mobileye discloses a computerized method of predicting user interaction with vehicles enabling motorists, cyclists, and pedestrians to anticipate the actions of other motorists, cyclists, and pedestrians (Fig. 5A-5F show an example of the method; [0007], 'Improved prediction of when a vehicle will attempt a cut in is needed'), the computerized method comprising:
receiving, by a computing device (part of system 100), a first at least one of an image and a video segment of a road scene (Fig. 1 shows an image acquisition unit 120 described in [0050]; [0120], a camera included in image acquisition unit 120 (such as image capture device 122 having field of view 202) may capture a plurality of images of an area forward of vehicle 200 (or to the sides or rear of a vehicle, for example) and transmit them over a data connection (e.g., digital, wired, USB, wireless, Bluetooth, etc.) to processing unit 110...By performing the analysis, processing unit 110 may detect a set of features within the set of images, such as lane markings, vehicles, pedestrians, road signs, highway exit ramps, traffic lights, and the like'),
the first at least one of an image and a video segment being taken from a perspective of a participant (vehicle 200 is the participant) in the road scene, the first at least one of an image and a video segment including at least one of a pedestrian, a cyclist, and a motor vehicle (Fig. 9A-9E; [0120], a camera included in image acquisition unit 120 (such as image capture device 122 having field of view 202) may capture a plurality of images of an area forward of vehicle200 (or to the sides or rear of a vehicle, for example) and transmit them over a data connection (e.g., digital, wired, USB, wireless, Bluetooth, etc.) to processing unit 110...By performing the analysis, processing unit 110 may detect a set of features within the set of images, such as lane markings, vehicles, pedestrians, road signs, highway exit ramps, traffic lights, and the like'; lane markings, vehicles, pedestrians, road signs, highway exit ramps, traffic lights, and the like are part of the acquired image);
generating, by the computing device (part of system 100), stimulus data based on the first at least one of the image and the video segment, the stimulus data comprising at least one of: the first at least one of the image and the video segment ([0116], 'In one embodiment, monocular image analysis module 402 may store instructions (such as computer vision software) which, when executed by processing unit 110, performs monocular image analysis of a set of images acquired by one of image capture devices 122, 124, and 126. In some embodiments, processing unit 110 may combine information from a set of images with additional sensory information (e.g., information from radar) to perform the monocular image analysis. As described in connection with FIGS. 5A-5D below, monocular image analysis module 402 may include instructions for detecting a set of features within the set of images, such as lane markings, vehicles, pedestrians, road signs, highway exit ramps, traffic lights, hazardous objects, and any other feature associated with an environment of a vehicle'), and an altered version of the first at least one of the image and the video segment;
transmitting, by the computing device (part of system 100), the stimulus data to a user interface (user interface 170; Fig. 3A & 5A-5D; [0181], 'The altruistic behavior parameter may, for example, be set based on input from an operator of vehicle 200...In some embodiments the altruistic behavior parameter may be user-selectable (e.g., a user-selectable value or state) before or during navigation...the user may select (e.g., through user interface 170), when one or more situational characteristics are detected, whether to be altruistic or not in that instance'; the situational characteristics can be the stimulus previously discussed);
receiving, by the computing device (part of system 100), a plurality of response data from the user interface (user interface 170; Fig. 3A; [0061], 'User interface 170 may be equipped with one or more processing devices configured to provide and receive information to or from a user and process that information for use by, for example, applications processor 180. In some embodiments, such processing devices may execute instructions for recognizing and tracking eye movements, receiving and interpreting voice commands, recognizing and interpreting touches and/or gestures made on a touchscreen, responding to keyboard entries or menu selections, etc'),
the response data including user inputted data by associated with the stimulus data, the user inputted data including at least one of an action and a likelihood of the action corresponding to at least one of the pedestrian, the cyclist, and the motor vehicle associated with the road scene ([0180], 'Altruistic behavior module 806 may further store instructions that, when executed by processing unit 110, determine whether to cause a navigational change (e.g., any of the navigational responses described above) that would permit the target vehicle to cut into the lane in which vehicle 200 is traveling'; [0181], 'The altruistic behavior parameter may, for example, be set based on input from an operator of vehicle 200...In some embodiments the altruistic behavior parameter may be user-selectable (e.g., a user-selectable value or state) before or during navigation...the user may select (e.g., through user interface 170), when one or more situational characteristics are detected, whether to be altruistic or not in that instance');
aggregating, by the computing device (part of system 100), a subset of the plurality of response data corresponding to one of the first at least one of the image and the video segment to form statistical data ([0180], 'Altruistic behavior module 806 may further store instructions that, when executed by processing unit 110, determine whether to cause a navigational change (e.g., any of the navigational responses described above) that would permit the target vehicle to cut into the lane in which vehicle 200 is traveling'; [0181], 'The altruistic behavior parameter may, for example, be set based on input from an operator of vehicle 200...In some embodiments the altruistic behavior parameter may be user-selectable (e.g., a user-selectable value or state) before or during navigation...the user may select (e.g., through user interface 170), when one or more situational characteristics are detected, whether to be altruistic or not in that

Supplemental Box

In case the space in any of the preceding boxes is not sufficient.
Continuation of:

instance'; any amount of the user input data can be selected as a subset to use with the Altruistic behavior module 806);
creating, by the computing device (part of system 100), a model based on the statistical data ([0180], 'Altruistic behavior module 806 may further store instructions that, when executed by processing unit 110, determine whether to cause a navigational change (e.g., any of the navigational responses described above) that would permit the target vehicle to cut into the lane in which vehicle 200 is traveling'; the Altruistic behavior module 806 can be used in conjunction with the data from other modules shown in Fig. 8 to create an overall model of vehicle behavior);
applying, by the computing device (part of system 100), the model to a second at least one image or video segment (Fig. 11 shows the steps that include capturing a second image of the target vehicle, where the Altruistic behavior module 806 and other modules can then be applied as described in [0189]); and
generating, by the computing device (part of system 100), a prediction of user behavior in the second at least one image or video segment based on the application of the model to the second at least one image or video segment (Fig. 5A-5D and 11; [0152], 'Predicting Cut In Vehicles and Altruistic Behavioral Responses'; [0154], 'Such navigation based at least in part on expected behavior may help avoid sudden braking and may provide an even further increased safety margin. Improved prediction of when the target vehicle will attempt a cut in can help minimize both unnecessary braking and sudden braking').

Regarding Claim 2, Mobileye discloses the computerized method of claim 1, wherein creating the model further comprises training, by the computing device (part of system 100), a supervised learning algorithm, the supervised learning algorithm including at least one of a random forest regressor, a support vector regressor, a simple neural network, a deep convolutional neural network, a recurrent neural network, and a long- short-term memory (LSTM) neural network ([0170], 'cut in response module 804 may evaluate a distance from vehicle 200 to a vehicle traveling behind vehicle 200 and factor that distance into a cut sensitivity parameter'; [0171], 'the cut in sensitivity parameters may be derived from examples using machine learning techniques such as neural networks. For example, a neural network may be trained to determine cut in sensitivity parameters based on scenarios').

Regarding Claim 3, Mobileye discloses the computerized method of claim 1, wherein generating the stimulus data further comprises:
manipulating at least one of pixel data or array data associated with the first at least one of the image and the video segment ([0077], 'The first image capture device 122 may acquire a plurality of first images relative to a scene associated with vehicle 200. Each of the plurality of first images may be acquired as a series of image scan lines, which may be captured using a rolling shutter. Each scan line may include a plurality of pixels'; [0121], 'processing unit 110 may estimate camera motion between consecutive image frames and calculate the disparities in pixels between the frames to construct a 3D-map of the road. Processing unit 110 may then use the 3D-map to detect the road surface, as well as hazards existing above the road surface'; calculating disparities between pixels is a manipulation in the broadest sense); and
creating a manipulated data file ([0056]-[0057] describe data storage for image files) including the manipulated at least one of pixel data or array data associated with the first at least one of the image and the video segment ([0121] describes the 3-D map that can be constructed from the manipulated pixels, which can be stored in memory).

Regarding Claim 4, Mobileye discloses the computerized method of claim 3, wherein the manipulated data file includes a looped version of extracted frames ([0081] describes pixels and the captured image frame) from the first at least one of the image and the video segment ([0077], 'The first image capture device 122 may acquire a plurality of first images relative to a scene associated with vehicle 200. Each of the plurality of first images may be acquired as a series of image scan lines, which may be captured using a rolling shutter. Each scan line may include a plurality of pixels'; [0121], 'processing unit 110 may estimate camera motion between consecutive image frames and calculate the disparities in pixels between the frames to construct a 3D-map of the road. Processing unit 110 may then use the 3D-map to detect the road surface, as well as hazards existing above the road surface'; calculating disparities between pixels is a manipulation in the broadest sense, while a constructed 3D map is a looped version of the extracted frames due to the fact that the 3D map is continuously shown, i.e. looped).

Regarding Claim 5, Mobileye discloses the computerized method of claim 1, wherein: the action includes one of the at least one of the pedestrian, the cyclist, and the motor vehicle staying in place, changing lanes, and crossing a street ([0154], 'On the other hand, in some situations (especially where a change in course of the target vehicle into the path of the host vehicle is expected), it may be desirable for vehicle 200 to effect a navigational response earlier. Such navigation based at least in part on expected behavior may help avoid sudden braking and may provide an even further increased safety margin. Improved prediction of when the target vehicle will attempt a cut in can help minimize both unnecessary braking and sudden braking. Such an improved prediction may be referred to as cut in detection, and the navigational responses taken when a cut in is detected may be referred to as a cut in response'); and
the likelihood of the action includes an ordinal value associated with a probability of the action ([0123], 'processing unit 110 may scan one or more images, compare the images to one or more predetermined patterns, and identify within each image possible locations that may contain objects of interest (e.g., vehicles, pedestrians, or portions thereof). The predetermined patterns may be designed in such a way to achieve a high rate of "false hits" and a low rate of "misses." For example, processing unit 110 may use a low threshold of similarity to predetermined patterns for identifying candidate objects as possible vehicles or pedestrians. Doing so may allow processing unit 110 to reduce the probability of missing (e.g., not identifying) a candidate object representing a vehicle or pedestrian'; [0127], 'At step 548, processing unit 110 may perform an optical flow analysis of one or more images to reduce the probabilities of detecting a "false hit" and missing a candidate object that represents a vehicle or pedestrian').

Supplemental Box

In case the space in any of the preceding boxes is not sufficient.
Continuation of:

Regarding Claim 6, Mobileye discloses the computerized method of claim 1, wherein the statistical data is associated with a parameter of the subset of the plurality of response data ([0181], 'The altruistic behavior parameter may, for example, be set based on input from an operator of vehicle 200...In some embodiments the altruistic behavior parameter may be user-selectable (e.g., a user-selectable value or state) before or during navigation...the user may select (e.g., through user interface 170), when one or more situational characteristics are detected, whether to be altruistic or not in that instance'; any amount of the user input data can be selected as a subset to use with the Altruistic behavior module 806),
the parameter including at least one of a content of a response ([0181] describes the user response, which would meet the broadest definition of selecting content, i.e. a behavior parameter), a time associated with entering a response, and a position of an eye of a human observer associated with the response, the position being measured with respect to a display associated with the user interface ([0061], 'User interface 170 may be equipped with one or more processing devices configured to provide and receive information to or from a user and process that information for use by, for example, applications processor 180. In some embodiments, such processing devices may execute instructions for recognizing and tracking eye movements, receiving and interpreting voice commands, recognizing and interpreting touches and/or gestures made on a touchscreen, responding to keyboard entries or menu selections, etc').

Regarding Claim 7, Mobileye discloses the computerized method of claim 6, wherein the parameter is further associated with at least one of a central tendency ([0163], 'Cut in detection module 802 may further store instructions that, when executed by processing unit 110, enable detection that a predetermined cut in sensitivity change factor is present in the environment of vehicle 200. A predetermined cut in sensitivity change factor may include any indicator suggestive of a [central] tendency of the target vehicle to remain on a current course or to change course into a path of the host vehicle'; [0181], 'The altruistic behavior parameter may, for example, be set based on input from an operator of vehicle 200...In some embodiments the altruistic behavior parameter may be user-selectable (e.g., a user-selectable value or state) before or during navigation...the user may select (e.g., through user interface 170), when one or more situational characteristics are detected, whether to be altruistic or not in that instance'), a variance, a skew, a kurtosis, a scale, and a histogram.

Regarding Claim 8, Mobileye discloses the computerized method of claim 1, wherein the second at least one image or video segment is associated with a live road scene (Fig. 9A shows a live road scene, where images are procured; [0190], 'FIG. 9A is an illustration of an example situation in which vehicle 200 may detect and respond to a cut in. As shown, vehicle 200 may be traveling on a roadway 900 along with a target vehicle 902'; [0191], 'Vehicle 200 may be configured to receive images of the environment surrounding the roadway 900 from, for example, one or more image capture devices associated with vehicle 200, such as image capture devices 122, 124, and/or 126').

Regarding Claim 9, Mobileye discloses the computerized method of claim 8, further comprising receiving, by the computing device, the second at least one image or video segment from another computing device associated with a vehicle participating in the live road scene (Fig. 2A-2E show different image capture devices 122, 124, 126, each of which can be considered a seperate computing device for providing images of the live road scene; [0066], 'The image capture devices (e.g., image capture devices 122, 124, and 126) may also be located in other locations'; [0174], 'cut in response module 804 may analyze images acquired by one of image capture devices 122, 124, and 126 to detect whether any cut in sensitivity change factor is present in the environment of vehicle 200').

Regarding Claim 10, Mobileye discloses the computerized method of claim 1, wherein the second at least one image or video segment is the same as the first at least one image or video segment (the images received in the steps of Fig. 5A-5D can be used in any manner, including using the same image for both creating a statistical model, as well as predicting the movement of an adjacent object), the method further comprising:
comparing, by the computing device ([0125], 'processing unit 110 may estimate parameters for the detected object and compare the object's frame-by-frame position data to a predicted position'), the prediction of user behavior with the statistical data to generate an error signal ([0137]-[0138] describe the steps of Fig. 5A-5D include an error tracking for a look-ahead period used to determine predicted vehicle behavior); and
adjusting, by the computing device, at least one weight associated with the model based on the error signal ([0142], 'At step 584, processing unit 110 may determine whether or not leading vehicle 200 is changing lanes based on the analysis performed at step 582. For example, processing unit 110 may make the determination based on a weighted average of the individual analyses performed at step 582. Under such a scheme, for example, a decision by processing unit 110 that the leading vehicle is likely changing lanes based on a particular type of analysis may be assigned a value of "1" (and "0" to represent a determination that the leading vehicle is not likely changing lanes). Different analyses performed at step 582 may be assigned different weights, and the disclosed embodiments are not limited to any particular combination of analyses and weights'; [0188], 'In some embodiments, the altruistic behavior parameter may be derived from examples using machine learning techniques such as neural networks. For example, a neural network could be trained to determine altruistic behavior parameters based on scenarios, as described above. In some embodiments, the altruistic behavior parameters may be determined based on previously detected driver behavior. For example, altruistic behavior by drivers can be positively weighted, causing the neural networks to preference altruistic behavior. Inconsistency, as described above, can be added through random or cyclical variation as described above').

Supplemental Box

In case the space in any of the preceding boxes is not sufficient.
Continuation of:

Regarding Claim 11, Mobileye discloses a computing system (Fig. 1 & 8) for predicting user interaction with vehicles enabling motorists, cyclists, and pedestrians to anticipate the actions of other motorists, cyclists, and pedestrians (Fig. 5A-5F show an example of the method enacted by the computer system; [0007], 'improved prediction of when a vehicle will attempt a cut in is needed'),
the computing system comprising:
a memory (memory 140, 150) containing instructions for execution by a processor (processing unit 110; Fig. 1 & 8; [0053]-[0054]), the processor configured to:
receive a first at least one of an image and a video segment of a road scene (Fig. 1 shows an image acquisition unit 120 described in [0050]; [0120], a camera included in image acquisition unit 120 (such as image capture device 122 having field of view 202) may capture a plurality of images of an area forward of vehicle 200 (or to the sides or rear of a vehicle, for example) and transmit them over a data connection (e.g., digital, wired, USB, wireless, Bluetooth, etc.) to processing unit 110...By performing the analysis, processing unit 110 may detect a set of features within the set of images, such as lane markings, vehicles, pedestrians, road signs, highway exit ramps, traffic lights, and the like'),
the first at least one of an image and a video segment being taken from a perspective of a participant in the road scene, the first at least one of an image and a video segment including at least one of a pedestrian, a cyclist, and a motor vehicle (Fig. 9A-9E; [0120], a camera included in image acquisition unit 120 (such as image capture device 122 having field of view 202) may capture a plurality of images of an area forward of vehicle200 (or to the sides or rear of a vehicle, for example) and transmit them over a data connection (e.g., digital, wired, USB, wireless, Bluetooth, etc.) to processing unit 110...By performing the analysis, processing unit 110 may detect a set of features within the set of images, such as lane markings, vehicles, pedestrians, road signs, highway exit ramps, traffic lights, and the like'; lane markings, vehicles, pedestrians, road signs, highway exit ramps, traffic lights, and the like are part of the acquired image);
generate stimulus data based on the first at least one of the image and the video segment, the stimulus data comprising at least one of:
the first at least one of the image and the video segment ([0116], 'In one embodiment, monocular image analysis module 402 may store instructions (such as computer vision software) which, when executed by processing unit 110, performs monocular image analysis of a set of images acquired by one of image capture devices 122, 124, and 126. In some embodiments, processing unit 110 may combine information from a set of images with additional sensory information (e.g., information from radar) to perform the monocular image analysis. As described in connection with FIGS. 5A-5D below, monocular image analysis module 402 may include instructions for detecting a set of features within the set of images, such as lane markings, vehicles, pedestrians, road signs, highway exit ramps, traffic lights, hazardous objects, and any other feature associated with an environment of a vehicle'), and an altered version of the first at least one of the image and the video segment;
transmit the stimulus data to a user interface (user interface 170; Fig. 3A & 5A-5D; [0181], 'The altruistic behavior parameter may, for example, be set based on input from an operator of vehicle 200...In some embodiments the altruistic behavior parameter may be user-selectable (e.g., a user-selectable value or state) before or during navigation...the user may select (e.g., through user interface 170), when one or more situational characteristics are detected, whether to be altruistic or not in that instance'; the situational characteristics can be the stimulus previously discussed);
receive a plurality of response data from the user interface (user interface 170; Fig. 3A; [0061], 'User interface 170 may be equipped with one or more processing devices configured to provide and receive information to or from a user and process that information for use by, for example, applications processor 180. In some embodiments, such processing devices may execute instructions for recognizing and tracking eye movements, receiving and interpreting voice commands, recognizing and interpreting touches and/or gestures made on a touchscreen, responding to keyboard entries or menu selections, etc'),
the response data including user inputted data by associated with the stimulus data, the user inputted data including at least one of an action and a likelihood of the action corresponding to at least one of the pedestrian, the cyclist, and the motor vehicle associated with the road scene ([0180], 'Altruistic behavior module 806 may further store instructions that, when executed by processing unit 110, determine whether to cause a navigational change (e.g., any of the navigational responses described above) that would permit the target vehicle to cut into the lane in which vehicle 200 is traveling'; [0181], 'The altruistic behavior parameter may, for example, be set based on input from an operator of vehicle 200...In some embodiments the altruistic behavior parameter may be user-selectable (e.g., a user-selectable value or state) before or during navigation...the user may select (e.g., through user interface 170), when one or more situational characteristics are detected, whether to be altruistic or not in that instance');
aggregate a subset of the plurality of response data corresponding to one of the first at least one of the image and the video segment to form statistical data ([0180], 'Altruistic behavior module 806 may further store instructions that, when executed by processing unit 110, determine whether to cause a navigational change (e.g., any of the navigational responses described above) that would permit the target vehicle to cut into the lane in which vehicle 200 is traveling'; [0181], 'The altruistic behavior parameter may, for example, be set based on input from an operator of vehicle 200...In some embodiments the altruistic behavior parameter may be user-selectable (e.g., a user-selectable value or state) before or during navigation...the user may select (e.g., through user interface 170), when one or more situational characteristics are detected, whether to be altruistic or not in that instance'; any amount of the user input data can be selected as a subset to use with the Altruistic behavior module 806);
create a model based on the statistical data ([0180], 'Altruistic behavior module 806 may further store instructions that, when executed by processing unit 110, determine whether to cause a navigational change (e.g., any of the navigational responses described above) that would permit the target vehicle to cut into the lane in which vehicle 200 is traveling'; the Altruistic behavior module 806 can be used in conjunction with the data from other modules shown in Fig. 8 to create an overall model of vehicle behavior);
apply the model to a second at least one image or video segment (Fig. 11 shows the steps that include capturing a second image of the target vehicle, where the Altruistic behavior module 806 and other modules can then be applied as described in [0169]); and
generate a prediction of user behavior in the second at least one image or video segment based on the application of the model to the second at least one image or video segment (Fig. 5A-5D and 11; [0152], 'Predicting Cut In Vehicles and Altruistic Behavioral Responses'; [0154], 'Such navigation based at least in part on expected behavior may help avoid sudden braking and may provide an even further increased safety margin. Improved prediction of when the target vehicle will attempt a cut in can help minimize both unnecessary braking and sudden braking').

Supplemental Box

In case the space in any of the preceding boxes is not sufficient.
Continuation of:

Regarding Claim 12, Mobileye discloses the computing system of claim 11, wherein to create the model the processor (part of system 100) is further configured to train a supervised learning algorithm, the supervised learning algorithm including at least one of a random forest regressor, a support vector regressor, a simple neural network, a deep convolutional neural network, a recurrent neural network, and a long-shortterm memory (LSTM) neural network. ([0170], 'cut in response module 804 may evaluate a distance from vehicle 200 to a vehicle traveling behind vehicle 200 and factor that distance into a cut sensitivity parameter'; [0171], 'the cut in sensitivity parameters may be derived from examples using machine learning techniques such as neural networks. For example, a neural network may be trained to determine cut in sensitivity parameters based on scenarios').

Regarding Claim 13, Mobileye discloses the computing system of claim 11, wherein to generate the stimulus data, the processor is further configured to:
manipulate at least one of pixel data or array data associated with the first at least one of the image and the video segment ([0077], 'The first image capture device 122 may acquire a plurality of first images relative to a scene associated with vehicle 200. Each of the plurality of first images may be acquired as a series of image scan lines, which may be captured using a rolling shutter. Each scan line may include a plurality of pixels'; [0121], 'processing unit 110 may estimate camera motion between consecutive image frames and calculate the disparities in pixels between the frames to construct a 3D-map of the road. Processing unit 110 may then use the 3D-map to detect the road surface, as well as hazards existing above the road surface'; calculating disparities between pixels is a manipulation in the broadest sense); and
create a manipulated data file including the manipulated at least one of pixel data or array data associated with the first at least one of the image and the video segment ([0056]-[0057] describe data storage for image files) including the manipulated at least one of pixel data or array data associated with the first at least one of the image and the video segment ([0121] describes the 3-D map that can be constructed from the manipulated pixels, which can be stored in memory).

Regarding Claim 14, see claim 4.

Regarding Claim 15, see claim 5.

Regarding Claim 16, see claim 6.

Regarding Claim 17, see claim 7.

Regarding Claim 18, see claim 8.

Regarding Claim 19, Mobileye discloses the computing system of claim 18, wherein the processor is further configured to receive the second at least one image or video segment from a computing device associated with a vehicle participating in the live road scene (Fig. 2A-2E show different image capture devices 122, 124, 126, each of which can be considered a separate computing device for providing images of the live road scene; [0066], 'The image capture devices (e.g., image capture devices 122, 124, and 126) may also be located in other locations'; [0174], 'cut in response module 804 may analyze images acquired by one of image capture devices 122, 124, and 126 to detect whether any cut in sensitivity change factor is present in the environment of vehicle 200').

Regarding Claim 20, Mobileye discloses the computing system of claim 11, wherein the second at least one image or video segment is the same as the first at least one image or video segment (the images received in the steps of Fig. 5A-5D can be used in any manner, including using the same image for both creating a statistical model, as well as predicting the movement of an adjacent object), and wherein the processor is further configured to:
compare ([0125], 'processing unit 110 may estimate parameters for the detected object and compare the object's frame-by-frame position data to a predicted position') the prediction of user behavior with the statistical data to generate an error signal ([0137]-[0138] describe the steps of Fig. 5A-5D include an error tracking for a look-ahead period used to determine predicted vehicle behavior); and
adjust at least one weight associated with the model based on the error signal ([0142], 'At step 584, processing unit 110 may determine whether or not leading vehicle 200 is changing lanes based on the analysis performed at step 582. For example, processing unit 110 may make the determination based on a weighted average of the individual analyses performed at step 582. Under such a scheme, for example, a decision by processing unit 110 that the leading vehicle is likely changing lanes based on a particular type of analysis may be assigned a value of "1" (and "0" to represent a determination that the leading vehicle is not likely changing lanes). Different analyses performed at step 582 may be assigned different weights, and the disclosed embodiments are not limited to any particular combination of analyses and weights'; [0186], 'In some embodiments, the altruistic behavior parameter may be derived from examples using machine learning techniques such as neural networks. For example, a neural network could be trained to determine altruistic behavior parameters based on scenarios, as described above. In some embodiments, the altruistic behavior parameters may be determined based on previously detected driver behavior. For example, altruistic behavior by drivers can be positively weighted, causing the neural networks to preference altruistic behavior. Inconsistency, as described above, can be added through random or cyclical variation as described above').

Claims 1-20 meet the criteria set out in PCT Article 33(4), and thus have industrial applicability because the subject matter claimed can be made or used in industry.

Search History:

Limited Classification Search

The Patent Analyst performed a limited classification search within the following US, IPC, CPC, ECLA, or F-Term classification areas:

CPC Class/Subclass(es): G06K 9/00805; B60Q 9/00; B60W 30/0956; B60W 30/16; G05D 1/0088; G05D 2201/0213; G06K 9/00718; G06K 9/6254; G06K 9/6256; G06N 3/04; G06N 3/08; G06N 3/084; G08G 1/04; G08G 1/166; H04W 4/046 (2019.01)

IPC (8) Class/Subclass(es): G06K 9/00; B60W 30/08; B60W 30/095; B60W 30/16; G05D 1/00; G05D 1/02; G06K 9/62; G06N 3/04; G06N 3/08; G08G 1/04; G08G 1/16; H04W 4/04 (2019.01)

U.S. Class/Subclass(es): 701/28; 706/12; 706/25

See Global Search Results.

Global Patent Literature Text Search

The Patent Analyst performed the following global text search, which was not limited by classification but may or may not have been limited by other criteria:

Minesoft PatBase: https//www.patbase.com

#	Search query	Results
1	PREDICTING HUMAN INTERACTION WITH VEHICLES	1
2	pa=(PERCEPTIVE AUTOMATA)	1
3	inv=((ANTHONY w2 Sam) or (MISRA w2 Sid) or (FALLER w2 Avery))	30
4	PN=(US2015213555 OR US2006190822 OR US2013046510 OR US9467515 OR US7295925)	5
5	(predict* w6 vehicle%) and (motorist% or cyclist% or pedestrian% or motorcyclist%)	2949
6	5 and pixel*	698
7	6 and (variance% or skew% or scale% or histogram% or tendenc*)	373
8	7 and (predict* w8 behav*)	60
9	8 and learn*	48
10	RF=(vehicle)	5
11	CPC=(G06K9/00805 OR G05D2201/0213 OR G06N3/084 OR B60Q9/00 OR B60W30/0956 OR B60W30/16 OR H04W4/046 OR G06K9/6254 OR G06N3/08 OR G06N3/04 OR G05D1/0088 OR G06K9/6256 OR G08G1/166 OR G08G1/04 OR G06K9/00718)	35484
12	IC=(G05D1/00 OR G05D1/02 OR G06N3/08 OR H04W4/04 OR B60W30/16 OR B60W30/095 OR B60W30/08 OR G08G1/16 OR G06K9/00 OR G06K9/62 OR G06N3/04 OR G08G1/04)	291584
13	UC=(701/28 OR 706/25 OR 706/12)	5841

14	or=11:13	301565
15	14 and ((extract* w5 frame%) w9 loop*)	6
16	14 and (predict* w8 behav*)	2548
17	16 and (variance% or skew% or scale% or histogram% or tendenc*)	1494
18	17 and (neural w3 network*)	485
19	18 and pixel%	165
20	18 and (manipulat* w7 pixel%)	3
21	18 and statistic*	338
22	21 and (motorist% or cyclist% or pedestrian% or motorcyclist%)	48

Google Patents: https://patents.google.com

#	Search query	Results
1	predicting user interaction with vehicles	432352
2	predicting user interaction with vehicles video learning algorithms	10961

Computer Accessed Text Databases Searched

The Patent Analyst searched the following computer accessed text databases:

IEEE Xplore Digital Library: http://ieeexplore.ieee.org/Xplore

#	Search query	Results
1	predicting user interaction with vehicles	42
2	predicting user interaction with vehicles video pixels learning algorithms	0

Google Scholar: https://scholar.google.com/

#	Search query	Results
1	PERCEPTIVE AUTOMATA	8670
2	predicting user interaction with vehicles	109000
3	predicting user interaction with vehicles video learning algorithms	27400
4	predicting user interaction with vehicles video pixels learning algorithms	18900

Date search was completed: 23 January 2019

DW/CC

Electronic Acknowledgement Receipt

EFS ID:	35620003
Application Number:	15830549
International Application Number:	
Confirmation Number:	8998
Title of Invention:	SYSTEM AND METHOD OF PREDICTING HUMAN INTERACTION WITH VEHICLES
First Named Inventor/Applicant Name:	Sam ANTHONY
Customer Number:	23483
Filer:	Rajendra Bhagwatisingh Panwar/Julie Eng
Filer Authorized By:	Rajendra Bhagwatisingh Panwar
Attorney Docket Number:	2210871.00123US2
Receipt Date:	03-APR-2019
Filing Date:	04-DEC-2017
Time Stamp:	16:56:16
Application Type:	Utility under 35 USC 111(a)

Payment information:

Submitted with Payment	no

File Listing:

Document Number	Document Description	File Name	File Size(Bytes)/ Message Digest	Multi Part /.zip	Pages (if appl.)
1	Information Disclosure Statement (IDS) Form (SB08)	42090_US_Information_Disclosure_Statement.pdf	201885 1ae99cdc302aef4645ae86172c6f99ab713e6f2d	no	3

Warnings:

Information:					
This is not an USPTO supplied IDS fillable form					
2	Other Reference-Patent/App/Search documents	C1_42090_WO_ISR_and_WO_2019-02-07.pdf	11277221 722354b987be2569c35c50c406d7705b203ec7f3	no	13
Warnings:					
Information:					
3	Non Patent Literature	C2_Attentional-pooling-for-action-recognition.pdf	1479099 87359a822d69dd7fac6044c9804da25b0769dbb6	no	12
Warnings:					
Information:					
4	Non Patent Literature	C3_Mask_R-CNN.pdf	6808024 8d559b5349f42c87ee8f35c6b47c6214b9facddc	no	12
Warnings:					
Information:					
5	Non Patent Literature	C4_Region_Proposal_Network_RPN_Backbone_of_Faster_R-CNN.pdf	1133848 9de36991ab9ac86a4f21929d98c4d3941404b827	no	6
Warnings:					
Information:					
6	Non Patent Literature	C5_Joint_Attention_in_Autonomous_Driving_JAAD.pdf	4018684 bf48a085f20d7d2d9d04464c2db3cd878e8594b6	no	10
Warnings:					
Information:					
7	Non Patent Literature	C6_Stacked_Hourglass.pdf	2538371 d33940232cdcce804f3245a312e22232256a50f1	no	17
Warnings:					
Information:					
8	Non Patent Literature	C7_Faster-r-cnn.pdf	360612 4ddde33b6abe4384b3025d65f4e6965f9164e227	no	9
Warnings:					
Information:					

9	Non Patent Literature	C8_Faster_R-CNN_Longer.pdf	3574081 9d25aee805223643981687bc80ecbf3ce7666885	no	14
Warnings:					
Information:					
10	Non Patent Literature	C9_A_neural_approach_to_relational_reasoning_DeepMind.pdf	578356 2e817babce295615c871f16c48ef006ce5b3f46b	no	6
Warnings:					
Information:					
11	Non Patent Literature	C10_Neural_network_for_Relational_Reasoning.pdf	617075 73e1ebbfe6f3fa7cfbef6e4955745ff39f418dee	no	16
Warnings:					
Information:					
12	Non Patent Literature	C11_schneemann2016.pdf	567437 283d77ec3f5531dc02f52e5ecb995563c8ebefc8	no	6
Warnings:					
Information:					
13	Non Patent Literature	C12_Visual_Interaction_Networks.pdf	1998844 843883f2ea7b17df6de26a854feac4aa2203b89a	no	14
Warnings:					
Information:					
14	Non Patent Literature	C13_Pyramind_Scene_Parsing_Network.pdf	2160676 c04dafbc403f0abe570da11aba77bd712877aaea	no	11
Warnings:					
Information:					
			Total Files Size (in bytes):	37314213	

This Acknowledgement Receipt evidences receipt on the noted date by the USPTO of the indicated documents, characterized by the applicant, and including page counts, where applicable. It serves as evidence of receipt similar to a Post Card, as described in MPEP 503.

New Applications Under 35 U.S.C. 111
If a new application is being filed and the application includes the necessary components for a filing date (see 37 CFR 1.53(b)-(d) and MPEP 506), a Filing Receipt (37 CFR 1.54) will be issued in due course and the date shown on this Acknowledgement Receipt will establish the filing date of the application.
National Stage of an International Application under 35 U.S.C. 371
If a timely submission to enter the national stage of an international application is compliant with the conditions of 35 U.S.C. 371 and other applicable requirements a Form PCT/DO/EO/903 indicating acceptance of the application as a national stage submission under 35 U.S.C. 371 will be issued in addition to the Filing Receipt, in due course.
New International Application Filed with the USPTO as a Receiving Office
If a new international application is being filed and the international application includes the necessary components for an international filing date (see PCT Article 11 and MPEP 1810), a Notification of the International Application Number and of the International Filing Date (Form PCT/RO/105) will be issued in due course, subject to prescriptions concerning national security, and the date shown on this Acknowledgement Receipt will establish the international filing date of the application.

UNITED STATES PATENT AND TRADEMARK OFFICE

UNITED STATES DEPARTMENT OF COMMERCE
United States Patent and Trademark Office
Address: COMMISSIONER FOR PATENTS
P.O. Box 1450
Alexandria, Virginia 22313-1450
www.uspto.gov

NOTICE OF ALLOWANCE AND FEE(S) DUE

23483 7590 04/29/2019
WILMERHALE/BOSTON
60 STATE STREET
BOSTON, MA 02109

EXAMINER
BAKER, CHARLOTTE M

ART UNIT	PAPER NUMBER
2664	

DATE MAILED: 04/29/2019

APPLICATION NO.	FILING DATE	FIRST NAMED INVENTOR	ATTORNEY DOCKET NO.	CONFIRMATION NO.
15/830,549	12/04/2017	Sam ANTHONY	2210871.00123US2	8998

TITLE OF INVENTION: SYSTEM AND METHOD OF PREDICTING HUMAN INTERACTION WITH VEHICLES

APPLN. TYPE	ENTITY STATUS	ISSUE FEE DUE	PUBLICATION FEE DUE	PREV. PAID ISSUE FEE	TOTAL FEE(S) DUE	DATE DUE
nonprovisional	SMALL	$500	$0.00	$0.00	$500	07/29/2019

THE APPLICATION IDENTIFIED ABOVE HAS BEEN EXAMINED AND IS ALLOWED FOR ISSUANCE AS A PATENT. PROSECUTION ON THE MERITS IS CLOSED. THIS NOTICE OF ALLOWANCE IS NOT A GRANT OF PATENT RIGHTS. THIS APPLICATION IS SUBJECT TO WITHDRAWAL FROM ISSUE AT THE INITIATIVE OF THE OFFICE OR UPON PETITION BY THE APPLICANT. SEE 37 CFR 1.313 AND MPEP 1308.

THE ISSUE FEE AND PUBLICATION FEE (IF REQUIRED) MUST BE PAID WITHIN THREE MONTHS FROM THE MAILING DATE OF THIS NOTICE OR THIS APPLICATION SHALL BE REGARDED AS ABANDONED. THIS STATUTORY PERIOD CANNOT BE EXTENDED. SEE 35 U.S.C. 151. THE ISSUE FEE DUE INDICATED ABOVE DOES NOT REFLECT A CREDIT FOR ANY PREVIOUSLY PAID ISSUE FEE IN THIS APPLICATION. IF AN ISSUE FEE HAS PREVIOUSLY BEEN PAID IN THIS APPLICATION (AS SHOWN ABOVE), THE RETURN OF PART B OF THIS FORM WILL BE CONSIDERED A REQUEST TO REAPPLY THE PREVIOUSLY PAID ISSUE FEE TOWARD THE ISSUE FEE NOW DUE.

HOW TO REPLY TO THIS NOTICE:

I. Review the ENTITY STATUS shown above. If the ENTITY STATUS is shown as SMALL or MICRO, verify whether entitlement to that entity status still applies.

If the ENTITY STATUS is the same as shown above, pay the TOTAL FEE(S) DUE shown above.

If the ENTITY STATUS is changed from that shown above, on PART B - FEE(S) TRANSMITTAL, complete section number 5 titled "Change in Entity Status (from status indicated above)".

For purposes of this notice, small entity fees are 1/2 the amount of undiscounted fees, and micro entity fees are 1/2 the amount of small entity fees.

II. PART B - FEE(S) TRANSMITTAL, or its equivalent, must be completed and returned to the United States Patent and Trademark Office (USPTO) with your ISSUE FEE and PUBLICATION FEE (if required). If you are charging the fee(s) to your deposit account, section "4b" of Part B - Fee(s) Transmittal should be completed and an extra copy of the form should be submitted. If an equivalent of Part B is filed, a request to reapply a previously paid issue fee must be clearly made, and delays in processing may occur due to the difficulty in recognizing the paper as an equivalent of Part B.

III. All communications regarding this application must give the application number. Please direct all communications prior to issuance to Mail Stop ISSUE FEE unless advised to the contrary.

IMPORTANT REMINDER: Maintenance fees are due in utility patents issuing on applications filed on or after Dec. 12, 1980. It is patentee's responsibility to ensure timely payment of maintenance fees when due. More information is available at www.uspto.gov/PatentMaintenanceFees.

TESLA EXHIBIT 1008, Page 97

PART B - FEE(S) TRANSMITTAL

Complete and send this form, together with applicable fee(s), by mail or fax, or via EFS-Web.

By mail, send to: Mail Stop ISSUE FEE
Commissioner for Patents
P.O. Box 1450
Alexandria, Virginia 22313-1450

By fax, send to: (571)-273-2885

INSTRUCTIONS: This form should be used for transmitting the ISSUE FEE and PUBLICATION FEE (if required). Blocks 1 through 5 should be completed where appropriate. All further correspondence including the Patent, advance orders and notification of maintenance fees will be mailed to the current correspondence address as indicated unless corrected below or directed otherwise in Block 1, by (a) specifying a new correspondence address; and/or (b) indicating a separate "FEE ADDRESS" for maintenance fee notifications.

CURRENT CORRESPONDENCE ADDRESS (Note: Use Block 1 for any change of address)

23483 7590 04/29/2019
WILMERHALE/BOSTON
60 STATE STREET
BOSTON, MA 02109

Note: A certificate of mailing can only be used for domestic mailings of the Fee(s) Transmittal. This certificate cannot be used for any other accompanying papers. Each additional paper, such as an assignment or formal drawing, must have its own certificate of mailing or transmission.

Certificate of Mailing or Transmission

I hereby certify that this Fee(s) Transmittal is being deposited with the United States Postal Service with sufficient postage for first class mail in an envelope addressed to the Mail Stop ISSUE FEE address above, or being transmitted to the USPTO via EFS-Web or by facsimile to (571) 273-2885, on the date below.

(Typed or printed name)

(Signature)

(Date)

APPLICATION NO.	FILING DATE	FIRST NAMED INVENTOR	ATTORNEY DOCKET NO.	CONFIRMATION NO.
15/830,549	12/04/2017	Sam ANTHONY	2210871.00123US2	8998

TITLE OF INVENTION: SYSTEM AND METHOD OF PREDICTING HUMAN INTERACTION WITH VEHICLES

APPLN. TYPE	ENTITY STATUS	ISSUE FEE DUE	PUBLICATION FEE DUE	PREV. PAID ISSUE FEE	TOTAL FEE(S) DUE	DATE DUE
nonprovisional	SMALL	$500	$0.00	$0.00	$500	07/29/2019

EXAMINER	ART UNIT	CLASS-SUBCLASS
BAKER, CHARLOTTE M	2664	382-104000

1. Change of correspondence address or indication of "Fee Address" (37 CFR 1.363).

❑ Change of correspondence address (or Change of Correspondence Address form PTO/SB/122) attached.

❑ "Fee Address" indication (or "Fee Address" Indication form PTO/SB/47; Rev 03-09 or more recent) attached. **Use of a Customer Number is required.**

2. For printing on the patent front page, list
(1) The names of up to 3 registered patent attorneys or agents OR, alternatively,
(2) The name of a single firm (having as a member a registered attorney or agent) and the names of up to 2 registered patent attorneys or agents. If no name is listed, no name will be printed.

1_____
2_____
3_____

3. ASSIGNEE NAME AND RESIDENCE DATA TO BE PRINTED ON THE PATENT (print or type)

PLEASE NOTE: Unless an assignee is identified below, no assignee data will appear on the patent. If an assignee is identified below, the document must have been previously recorded, or filed for recordation, as set forth in 37 CFR 3.11 and 37 CFR 3.81(a). Completion of this form is NOT a substitute for filing an assignment.

(A) NAME OF ASSIGNEE (B) RESIDENCE: (CITY and STATE OR COUNTRY)

Please check the appropriate assignee category or categories (will not be printed on the patent) : ❑ Individual ❑ Corporation or other private group entity ❑ Government

4a. Fees submitted: ❑Issue Fee ❑Publication Fee (if required) ❑Advance Order - # of Copies _____

4b. Method of Payment: *(Please first reapply any previously paid fee shown above)*

❑ Electronic Payment via EFS-Web ❑ Enclosed check ❑ Non-electronic payment by credit card (Attach form PTO-2038)

❑ The Director is hereby authorized to charge the required fee(s), any deficiency, or credit any overpayment to Deposit Account No. _____

5. **Change in Entity Status** (from status indicated above)

❑ Applicant certifying micro entity status. See 37 CFR 1.29

❑ Applicant asserting small entity status. See 37 CFR 1.27

❑ Applicant changing to regular undiscounted fee status.

NOTE: Absent a valid certification of Micro Entity Status (see forms PTO/SB/15A and 15B), issue fee payment in the micro entity amount will not be accepted at the risk of application abandonment.
NOTE: If the application was previously under micro entity status, checking this box will be taken to be a notification of loss of entitlement to micro entity status.
NOTE: Checking this box will be taken to be a notification of loss of entitlement to small or micro entity status, as applicable.

NOTE: This form must be signed in accordance with 37 CFR 1.31 and 1.33. See 37 CFR 1.4 for signature requirements and certifications.

Authorized Signature _____ Date _____

Typed or printed name _____ Registration No. _____

UNITED STATES DEPARTMENT OF COMMERCE
United States Patent and Trademark Office
Address: COMMISSIONER FOR PATENTS
P.O. Box 1450
Alexandria, Virginia 22313-1450
www.uspto.gov

APPLICATION NO.	FILING DATE	FIRST NAMED INVENTOR	ATTORNEY DOCKET NO.	CONFIRMATION NO.
15/830,549	12/04/2017	Sam ANTHONY	2210871.00123US2	8998

23483 7590 04/29/2019
WILMERHALE/BOSTON
60 STATE STREET
BOSTON, MA 02109

EXAMINER
BAKER, CHARLOTTE M

ART UNIT	PAPER NUMBER
2664	

DATE MAILED: 04/29/2019

Determination of Patent Term Adjustment under 35 U.S.C. 154 (b)
(Applications filed on or after May 29, 2000)

The Office has discontinued providing a Patent Term Adjustment (PTA) calculation with the Notice of Allowance.

Section 1(h)(2) of the AIA Technical Corrections Act amended 35 U.S.C. 154(b)(3)(B)(i) to eliminate the requirement that the Office provide a patent term adjustment determination with the notice of allowance. See Revisions to Patent Term Adjustment, 78 Fed. Reg. 19416, 19417 (Apr. 1, 2013). Therefore, the Office is no longer providing an initial patent term adjustment determination with the notice of allowance. The Office will continue to provide a patent term adjustment determination with the Issue Notification Letter that is mailed to applicant approximately three weeks prior to the issue date of the patent, and will include the patent term adjustment on the patent. Any request for reconsideration of the patent term adjustment determination (or reinstatement of patent term adjustment) should follow the process outlined in 37 CFR 1.705.

Any questions regarding the Patent Term Extension or Adjustment determination should be directed to the Office of Patent Legal Administration at (571)-272-7702. Questions relating to issue and publication fee payments should be directed to the Customer Service Center of the Office of Patent Publication at 1-(888)-786-0101 or (571)-272-4200.

TESLA EXHIBIT 1008, Page 99

OMB Clearance and PRA Burden Statement for PTOL-85 Part B

The Paperwork Reduction Act (PRA) of 1995 requires Federal agencies to obtain Office of Management and Budget approval before requesting most types of information from the public. When OMB approves an agency request to collect information from the public, OMB (i) provides a valid OMB Control Number and expiration date for the agency to display on the instrument that will be used to collect the information and (ii) requires the agency to inform the public about the OMB Control Number's legal significance in accordance with 5 CFR 1320.5(b).

The information collected by PTOL-85 Part B is required by 37 CFR 1.311. The information is required to obtain or retain a benefit by the public which is to file (and by the USPTO to process) an application. Confidentiality is governed by 35 U.S.C. 122 and 37 CFR 1.14. This collection is estimated to take 30 minutes to complete, including gathering, preparing, and submitting the completed application form to the USPTO. Time will vary depending upon the individual case. Any comments on the amount of time you require to complete this form and/or suggestions for reducing this burden, should be sent to the Chief Information Officer, U.S. Patent and Trademark Office, U.S. Department of Commerce, P.O. Box 1450, Alexandria, Virginia 22313-1450. DO NOT SEND FEES OR COMPLETED FORMS TO THIS ADDRESS. SEND TO: Commissioner for Patents, P.O. Box 1450, Alexandria, Virginia 22313-1450. Under the Paperwork Reduction Act of 1995, no persons are required to respond to a collection of information unless it displays a valid OMB control number.

Privacy Act Statement

The Privacy Act of 1974 (P.L. 93-579) requires that you be given certain information in connection with your submission of the attached form related to a patent application or patent. Accordingly, pursuant to the requirements of the Act, please be advised that: (1) the general authority for the collection of this information is 35 U.S.C. 2(b)(2); (2) furnishing of the information solicited is voluntary; and (3) the principal purpose for which the information is used by the U.S. Patent and Trademark Office is to process and/or examine your submission related to a patent application or patent. If you do not furnish the requested information, the U.S. Patent and Trademark Office may not be able to process and/or examine your submission, which may result in termination of proceedings or abandonment of the application or expiration of the patent.

The information provided by you in this form will be subject to the following routine uses:

1. The information on this form will be treated confidentially to the extent allowed under the Freedom of Information Act (5 U.S.C. 552) and the Privacy Act (5 U.S.C 552a). Records from this system of records may be disclosed to the Department of Justice to determine whether disclosure of these records is required by the Freedom of Information Act.
2. A record from this system of records may be disclosed, as a routine use, in the course of presenting evidence to a court, magistrate, or administrative tribunal, including disclosures to opposing counsel in the course of settlement negotiations.
3. A record in this system of records may be disclosed, as a routine use, to a Member of Congress submitting a request involving an individual, to whom the record pertains, when the individual has requested assistance from the Member with respect to the subject matter of the record.
4. A record in this system of records may be disclosed, as a routine use, to a contractor of the Agency having need for the information in order to perform a contract. Recipients of information shall be required to comply with the requirements of the Privacy Act of 1974, as amended, pursuant to 5 U.S.C. 552a(m).
5. A record related to an International Application filed under the Patent Cooperation Treaty in this system of records may be disclosed, as a routine use, to the International Bureau of the World Intellectual Property Organization, pursuant to the Patent Cooperation Treaty.
6. A record in this system of records may be disclosed, as a routine use, to another federal agency for purposes of National Security review (35 U.S.C. 181) and for review pursuant to the Atomic Energy Act (42 U.S.C. 218(c)).
7. A record from this system of records may be disclosed, as a routine use, to the Administrator, General Services, or his/her designee, during an inspection of records conducted by GSA as part of that agency's responsibility to recommend improvements in records management practices and programs, under authority of 44 U.S.C. 2904 and 2906. Such disclosure shall be made in accordance with the GSA regulations governing inspection of records for this purpose, and any other relevant (i.e., GSA or Commerce) directive. Such disclosure shall not be used to make determinations about individuals.
8. A record from this system of records may be disclosed, as a routine use, to the public after either publication of the application pursuant to 35 U.S.C. 122(b) or issuance of a patent pursuant to 35 U.S.C. 151. Further, a record may be disclosed, subject to the limitations of 37 CFR 1.14, as a routine use, to the public if the record was filed in an application which became abandoned or in which the proceedings were terminated and which application is referenced by either a published application, an application open to public inspection or an issued patent.
9. A record from this system of records may be disclosed, as a routine use, to a Federal, State, or local law enforcement agency, if the USPTO becomes aware of a violation or potential violation of law or regulation.

Notice of Allowability	Application No. 15/830,549	Applicant(s) ANTHONY et al.	
	Examiner CHARLOTTE M BAKER	Art Unit 2664	AIA (FITF) Status Yes

-- The MAILING DATE of this communication appears on the cover sheet with the correspondence address--

All claims being allowable, PROSECUTION ON THE MERITS IS (OR REMAINS) CLOSED in this application. If not included herewith (or previously mailed), a Notice of Allowance (PTOL-85) or other appropriate communication will be mailed in due course. **THIS NOTICE OF ALLOWABILITY IS NOT A GRANT OF PATENT RIGHTS.** This application is subject to withdrawal from issue at the initiative of the Office or upon petition by the applicant. See 37 CFR 1.313 and MPEP 1308.

1. ☑ This communication is responsive to application filed on 12/04/2017.
   ☐ A declaration(s)/affidavit(s) under **37 CFR 1.130(b)** was/were filed on _____.

2. ☐ An election was made by the applicant in response to a restriction requirement set forth during the interview on _____; the restriction requirement and election have been incorporated into this action.

3. ☑ The allowed claim(s) is/are 1-20 . As a result of the allowed claim(s), you may be eligible to benefit from the **Patent Prosecution Highway** program at a participating intellectual property office for the corresponding application. For more information, please see **http://www.uspto.gov/patents/init_events/pph/index.jsp** or send an inquiry to **PPHfeedback@uspto.gov.**

4. ☐ Acknowledgment is made of a claim for foreign priority under 35 U.S.C. § 119(a)-(d) or (f).

   Certified copies:

   a) ☐ All b) ☐ Some *c) ☐ None of the:

   1. ☐ Certified copies of the priority documents have been received.
   2. ☐ Certified copies of the priority documents have been received in Application No. _____ .
   3. ☐ Copies of the certified copies of the priority documents have been received in this national stage application from the International Bureau (PCT Rule 17.2(a)).

   * Certified copies not received: _____ .

Applicant has THREE MONTHS FROM THE "MAILING DATE" of this communication to file areply complying with the requirements noted below. Failure to timely comply will result in ABANDONMENT of this application.
THIS THREE-MONTH PERIOD IS NOT EXTENDABLE.

5. ☐ CORRECTED DRAWINGS (as "replacement sheets") must be submitted.
   ☐ including changes required by the attached Examiner's Amendment / Comment or in the Office action of Paper No./Mail Date _____ .

   Identifying indicia such as the application number (see 37 CFR 1.84(c)) should be written on the drawings in the front (not the back) of each sheet. Replacement sheet(s) should be labeled as such in the header according to 37 CFR 1.121(d).

6. ☐ DEPOSIT OF and/or INFORMATION about the deposit of BIOLOGICAL MATERIAL must be submitted. Note the attached Examiner's comment regarding REQUIREMENT FOR THE DEPOSIT OF BIOLOGICAL MATERIAL.

Attachment(s)

1. ☑ Notice of References Cited (PTO-892)
2. ☑ Information Disclosure Statements (PTO/SB/08), Paper No./Mail Date _____.
3. ☐ Examiner's Comment Regarding Requirement for Deposit of Biological Material _____.
4. ☐ Interview Summary (PTO-413), Paper No./Mail Date. _____.
5. ☐ Examiner's Amendment/Comment
6. ☑ Examiner's Statement of Reasons for Allowance
7. ☐ Other _____.

/CHARLOTTE M BAKER/
Primary Examiner, Art Unit 2664

DETAILED ACTION

Notice of Pre-AIA or AIA Status

1. The present application, filed on or after March 16, 2013, is being examined under the first inventor to file provisions of the AIA.

Reasons for Allowance

2. **Claims 1-20** are allowed.

3. The present invention is directed to predicting human interaction with vehicles. Each independent claim identifies the uniquely distinct features:

receive a first at least one of an image and a video segment of a road scene, the first at least one of an image and a video segment being taken from a perspective of a participant in the road scene, the first at least one of an image and a video segment including at least one of a pedestrian, a cyclist, and a motor vehicle;

generate stimulus data based on the first at least one of the image and the video segment, the stimulus data comprising at least one of:

the first at least one of the image and the video segment, and

an altered version of the first at least one of the image and the video segment; transmit the stimulus data to a user interface;

receive a plurality of response data from the user interface, the response data including user inputted data by associated with the stimulus data, the user inputted data including at least one of an action and a likelihood of the action corresponding to at least one of the pedestrian, the cyclist, and the motor vehicle associated with the road scene;

aggregate a subset of the plurality of response data corresponding to one of the first at least one of the image and the video segment to form statistical data;

create a model based on the statistical data;

apply the model to a second at least one image or video segment; and

generate a prediction of user behavior in the second at least one image or video segment based on the application of the model to the second at least one image or video segment.

4. The closest prior art, US 7,269,516 ("Brunner et al."); US 10,186,123 ("Kanaujia et al."); US 2018/0146198 A1 ("Atluru et al."); US 8,175,333 ("Eaton et al."); US 8,854,457 ("De Vleeschouwer et al."); US 9,881,221 ("Bala et al."), fail to anticipate or render obvious at least the above limitations and the claim as a whole.

5. Any comments considered necessary by applicant must be submitted no later than the payment of the issue fee and, to avoid processing delays, should preferably accompany the issue

fee. Such submissions should be clearly labeled "Comments on Statement of Reasons for Allowance."

Conclusion

6. Any inquiry concerning this communication or earlier communications from the examiner should be directed to CHARLOTTE M BAKER whose telephone number is (571)272-7459. The examiner can normally be reached on Mon - Fri 8:00-5:00.

Examiner interviews are available via telephone, in-person, and video conferencing using a USPTO supplied web-based collaboration tool. To schedule an interview, applicant is encouraged to use the USPTO Automated Interview Request (AIR) at http://www.uspto.gov/interviewpractice.

If attempts to reach the examiner by telephone are unsuccessful, the examiner's supervisor, NAY A MAUNG can be reached on (571)272-7778. The fax phone number for the organization where this application or proceeding is assigned is 571-273-8300.

Information regarding the status of an application may be obtained from the Patent Application Information Retrieval (PAIR) system. Status information for published applications may be obtained from either Private PAIR or Public PAIR. Status information for unpublished applications is available through Private PAIR only. For more information about the PAIR system, see http://pair-direct.uspto.gov. Should you have questions on access to the Private PAIR system, contact the Electronic Business Center (EBC) at 866-217-9197 (toll-free). If you would like assistance from a USPTO Customer Service Representative or access to the automated information system, call 800-786-9199 (IN USA OR CANADA) or 571-272-1000.

/CHARLOTTE M BAKER/
Primary Examiner, Art Unit 2664

Notice of References Cited	Application/Control No. 15/830,549	Applicant(s)/Patent Under Reexamination ANTHONY et al.	
	Examiner CHARLOTTE M BAKER	Art Unit 2664	Page 1 of 1

U.S. PATENT DOCUMENTS

*		Document Number Country Code-Number-Kind Code	Date MM-YYYY	Name	CPC Classification	US Classification
*	A	US-7269516-B2	09-2007	Brunner; Daniela	A01K1/031	702/19
*	B	US-10186123-B2	01-2019	Kanaujia; Atul	G08B13/19608	1/1
*	C	US-20180146198-A1	05-2018	ATLURU; Chaitanya	G06K9/00711	1/1
*	D	US-8175333-B2	05-2012	Eaton; John Eric	G06F15/16	382/103
*	E	US-8854457-B2	10-2014	De Vleeschouwer; Christophe	G11B27/034	348/135
*	F	US-9881221-B2	01-2018	Bala; Raja	G06K9/00845	1/1
	G					
	H					
	I					
	J					
	K					
	L					
	M					

FOREIGN PATENT DOCUMENTS

*		Document Number Country Code-Number-Kind Code	Date MM-YYYY	Country	Name	CPC Classification
	N					
	O					
	P					
	Q					
	R					
	S					
	T					

NON-PATENT DOCUMENTS

*		Include as applicable: Author, Title Date, Publisher, Edition or Volume, Pertinent Pages)
	U	
	V	
	W	
	X	

*A copy of this reference is not being furnished with this Office action. (See MPEP § 707.05(a).)
Dates in MM-YYYY format are publication dates. Classifications may be US or foreign.

Search Notes	Application/Control No.	Applicant(s)/Patent Under Reexamination
	15/830,549	ANTHONY et al.
	Examiner	**Art Unit**
	CHARLOTTE M BAKER	2664

CPC - Searched*		
Symbol	**Date**	**Examiner**
G06T2207/10016 OR G06T7/11 OR G06T2207/30252 OR G06K9/00818 OR G06K9/4609	04/24/2019	CMB
G06K9/00711 OR G06K2009/00738 OR G06K9/00765 OR G11B27/034 OR G06F15/16	04/24/2019	CMB

CPC Combination Sets - Searched*		
Symbol	**Date**	**Examiner**
G06T2207/10016 OR G06T7/11 OR G06T2207/30252 OR G06K9/00818 OR G06K9/4609	04/24/2019	CMB
G06K9/00711 OR G06K2009/00738 OR G06K9/00765 OR G11B27/034 OR G06F15/16	04/24/2019	CMB

US Classification - Searched*			
Class	**Subclass**	**Date**	**Examiner**
382	104, 103, 110, 128	04/23/2019	CMB
702	19	04/23/2019	CMB
73	865.4	04/23/2019	CMB
348	135, 139	04/23/2019	CMB
386	278	04/23/2019	CMB

* See search history printout included with this form or the SEARCH NOTES box below to determine the scope of the search.

Search Notes		
Search Notes	**Date**	**Examiner**
EAST Search limited by text.	04/23/2019	CMB
CPC Search limited by text.	04/23/2019	CMB
Inventor Search	04/23/2019	CMB

/CHARLOTTE M BAKER/ Primary Examiner, Art Unit 2664	

Search Notes	Application/Control No.	Applicant(s)/Patent Under Reexamination
	15/830,549	ANTHONY et al.
	Examiner	**Art Unit**
	CHARLOTTE M BAKER	2664

Interference Search			
US Class/CPC Symbol	**US Subclass/CPC Group**	**Date**	**Examiner**
382	104	04/23/2019	CMB

/CHARLOTTE M BAKER/ Primary Examiner, Art Unit 2664	

TESLA EXHIBIT 1008, Page 125

Issue Classification	Application/Control No.	Applicant(s)/Patent Under Reexamination
	15/830,549	ANTHONY et al.
	Examiner	**Art Unit**
	CHARLOTTE M BAKER	2664

CPC

Symbol					Type	Version
G06K	/	9	/	6254	F	2013-01-01
G06N	/	3	/	08	I	2013-01-01
G06N	/	3	/	04	I	2013-01-01
G06K	/	9	/	00805	I	2013-01-01
G06K	/	9	/	6256	I	2013-01-01
G08G	/	1	/	166	I	2013-01-01
G08G	/	1	/	04	I	2013-01-01
G06K	/	9	/	00718	I	2013-01-01
G05D	/	2201	/	0213	A	2013-01-01
G05D	/	1	/	0088	A	2013-01-01

CPC Combination Sets

Symbol					Type	Set	Ranking	Version
	/		/					

NONE (Assistant Examiner)	(Date)	**Total Claims Allowed:** 20	
/CHARLOTTE M BAKER/ Primary Examiner, Art Unit 2664 (Primary Examiner)	24 April 2019 (Date)	O.G. Print Claim(s) 1	O.G. Print Figure 10

U.S. Patent and Trademark Office

Part of Paper No.: 20190423

Issue Classification	Application/Control No.	Applicant(s)/Patent Under Reexamination
	15/830,549	ANTHONY et al.
	Examiner	**Art Unit**
	CHARLOTTE M BAKER	2664

INTERNATIONAL CLASSIFICATION				
CLAIMED				
G06K	/	9	/	00

NON-CLAIMED				
	/		/	

US ORIGINAL CLASSIFICATION	
CLASS	**SUBCLASS**
382	104

CROSS REFERENCES(S)						
CLASS	**SUBCLASS (ONE SUBCLASS PER BLOCK)**					

NONE (Assistant Examiner)	(Date)	**Total Claims Allowed:** 20	
/CHARLOTTE M BAKER/ Primary Examiner, Art Unit 2664 (Primary Examiner)	24 April 2019 (Date)	O.G. Print Claim(s) 1	O.G. Print Figure 10

Issue Classification	Application/Control No.	Applicant(s)/Patent Under Reexamination
	15/830,549	ANTHONY et al.
	Examiner	**Art Unit**
	CHARLOTTE M BAKER	2664

☑ Claims renumbered in the same order as presented by applicant ☐ CPA ☐ T.D. ☐ R.1.47

CLAIMS

Final	Original	Final	Original	Final	Original	Final	Original	Final	Original	Final	Original	Final	Original	Final	Original
	1		10		19										
	2		11		20										
	3		12												
	4		13												
	5		14												
	6		15												
	7		16												
	8		17												
	9		18												

NONE (Assistant Examiner)	(Date)	**Total Claims Allowed:** 20	
/CHARLOTTE M BAKER/ Primary Examiner, Art Unit 2664 (Primary Examiner)	24 April 2019 (Date)	O.G. Print Claim(s) 1	O.G. Print Figure 10

U.S. Patent and Trademark Office

Part of Paper No.: 20190423

Index of Claims	Application/Control No.	Applicant(s)/Patent Under Reexamination
	15/830,549	ANTHONY et al.
	Examiner	**Art Unit**
	CHARLOTTE M BAKER	2664

✓	Rejected	-	Cancelled	N	Non-Elected	A	Appeal
=	Allowed	÷	Restricted	I	Interference	O	Objected

CLAIMS

☑ Claims renumbered in the same order as presented by applicant ☐ CPA ☐ T.D. ☐ R.1.47

CLAIM		DATE								
Final	Original	04/24/2019								
	1	=								
	2	=								
	3	=								
	4	=								
	5	=								
	6	=								
	7	=								
	8	=								
	9	=								
	10	=								
	11	=								
	12	=								
	13	=								
	14	=								
	15	=								
	16	=								
	17	=								
	18	=								
	19	=								
	20	=								

INFORMATION DISCLOSURE STATEMENT BY APPLICANT
(Not for submission under 37 CFR 1.99)

	Complete if Known
Application Number	15/830,549
Filing Date	December 4, 2017
First Named Inventor	Sam ANTHONY
Applicant	Perceptive Automata
Art Unit	2664
Confirmation Number	8998
Examiner Name	Charlotte M. Baker
Attorney Docket Number	35447-42090/US

Sheet 1 of 3

U.S. PATENT DOCUMENTS				
		Document No.		
Examiner Initials*	Cite No.[1]	Number – Kind Code[2] (if known)	Publication Date MM-DD-YYYY	Name of Patentee or Applicant of Cited Document
	A1	US 2017/0270374 A1	09-21-2017	Ford Global Technologies, LLC
	A2	US 2017/0153639 A1	06-01-2017	MOBILEYE VISION TECHNOLOGIES LTD.
	A3	US 2015/0213555 A1	07-30-2015	HTI IP, LLC

FOREIGN PATENT DOCUMENTS					
		Foreign Patent Document			
Examiner Initials*	Cite No.[1]	Country Code[3] – Number[4] Kind Code[5] (if known)	Publication Date MM-DD-YYYY	Name of Patentee or Applicant of Cited Document	T[6]
	B1				

OTHER REFERENCES – NON-PATENT LITERATURE DOCUMENTS			
Examiner Initials*	Cite No.[1]	Include name of the author (in CAPITAL LETTERS), title of the article (when appropriate), title of the item (book, magazine, journal, serial, symposium, catalog, etc.), date, page(s), volume-issue number(s), publisher, city and/or country where published	T[6]
	C1	International Search Report and Written Opinion, PCT Application No. PCT/US2018/063459, February 7, 2019, 13 pages.	
	C2	GIRDHAR, R. and RAMANAN, D., "Attentional Pooling for Action Recognition," 31st Conference on Neural Information Processing Systems (NIPS 2017), 12 pages.	
	C3	HE, K., et al. "Mask R-CNN," Computer Vision and Pattern Recognition 1703.06870v3, January 24, 2018, 12 pages.	
	C4	KARMARKAR, T., "Regional Proposal network (RPN)- Backbone of Faster R-CNN," August 18, 2018, 6 pages, [Online][Retrieved January 5, 2019], Retrieved from the internet <URL:https://medium.com/@tanaykarmarkar/region-proposal-network-rpn-bac>.	
	C5	KOTSERUBA, I., et al., "Joint Attention in Autonomous Driving (JADD),' Robotics 1609.04741v5, April 24, 2017, 10 pages.	
	C6	NEWELL, A., et al., "Stacked Hourglass Networks for Human Pose Estimation," Computer Vision and Pattern Recognition 1603.06937v2, July 26, 2016, 17 pages.	

EXAMINER SIGNATURE	
Examiner Signature	/CHARLOTTE M BAKER/
Date Considered	04/24/2019

*EXAMINER: Initial if reference considered, whether or not citation is in conformance with MPEP 609. Draw line through a citation if not in conformance and not considered. Include copy of this form with next communication to applicant.

[1] Applicant's unique citation designation number (option). [2] See Kind Codes of USPTO Patent Documents at www.USPTO.GOV or MPEP 901.04. [3] Enter office that issued the document, by the two-letter code (WIPO Standard ST.3). [4] For Japanese patent documents, the indication of the year of the reign of the Emperor must precede the serial number of the patent document.

[5] Kind of document by the appropriate symbols as indicated on the document under WIPO Standard ST.16 if possible. [6] Applicant is to place a check mark here if English language translation is attached.

ALL REFERENCES CONSIDERED EXCEPT WHERE LINED THROUGH. /C.M.B/

INFORMATION DISCLOSURE STATEMENT BY APPLICANT (Not for submission under 37 CFR 1.99)				Complete if Known	
				Application Number	15/830,549
				Filing Date	December 4, 2017
				First Named Inventor	Sam ANTHONY
				Applicant	Perceptive Automata
				Art Unit	2664
				Confirmation Number	8998
				Examiner Name	Charlotte M. Baker
Sheet	2	of	3	Attorney Docket Number	35447-42090/US

OTHER REFERENCES – NON-PATENT LITERATURE DOCUMENTS			
Examiner Initials*	Cite No.[1]	Include name of the author (in CAPITAL LETTERS), title of the article (when appropriate), title of the item (book, magazine, journal, serial, symposium, catalog, etc.), date, page(s), volume-issue number(s), publisher, city and/or country where published	T[6]
	C7	REN, S. et al. "Faster R-CNN: Towards Real-Time Object Detection with Region Proposal Networks," Advances in Neural Information Processing Systems 28 (NIPS 2015), 9 pages.	
	C8	REN, S. et al. "Faster R-CNN: Towards Real-Time Object Detection with Region Proposal Networks," Computer Vision and Patteren Recognition 1506.01497v3, January 6, 2016, 14 pages.	
	C9	SANTORO, A. et al., "A neural approach to relational reasoning," June 6, 2017, 6 pages, [Online][Retrieved January 5, 2019], Retrieved from the internet <URL:https://deepmind.com/blog/neural-approach-relational-reasoning/>.	
	C10	SANTORO, A. et al., "A simple neural network module for relational reasoning," Computation and Language 1706.01427, June 5, 2017, 16 pages.	
	C11	SCHNEEMANN, F., et al., "Context-based Detection of Pedestrian Crossing Intention for Autonomous Driving in Urban Environments," 2016 IEEE/RSJ International Conference on Intelligent Robots and Systems (IROS), October 2016, 6 pages.	
	C12	WATTERS, N., et al., " Visual Interaction Networks," Computer Vision and Pattern Recognition 1706.01433v1, June 5, 2017, 14 pages.	
	C13	ZHAO, H., et al., "Pyramid Scheme Parsing Network," Computer Vision and Pattern Recognition 1612.01105v2, April 27, 2017, 11 pages.	

EXAMINER SIGNATURE	
Examiner Signature	/CHARLOTTE M BAKER/
Date Considered	04/24/2019

*EXAMINER: Initial if reference considered, whether or not citation is in conformance with MPEP 609. Draw line through a citation if not in conformance and not considered. Include copy of this form with next communication to applicant.

[1] Applicant's unique citation designation number (option). [2] See Kind Codes of USPTO Patent Documents at www.USPTO.GOV or MPEP 901.04. [3] Enter office that issued the document, by the two-letter code (WIPO Standard ST.3). [4] For Japanese patent documents, the indication of the year of the reign of the Emperor must precede the serial number of the patent document.

[5] Kind of document by the appropriate symbols as indicated on the document under WIPO Standard ST.16 if possible. [6] Applicant is to place a check mark here if English language translation is attached.

ALL REFERENCES CONSIDERED EXCEPT WHERE LINED THROUGH. /C.M.B/

INFORMATION DISCLOSURE STATEMENT BY APPLICANT (Not for submission under 37 CFR 1.99)				Complete if Known	
				Application Number	15/830,549
				Filing Date	December 4, 2017
				First Named Inventor	Sam ANTHONY
				Applicant	Perceptive Automata
				Art Unit	2664
				Confirmation Number	8998
				Examiner Name	Charlotte M. Baker
Sheet	3	of	3	Attorney Docket Number	35447-42090/US

CERTIFICATION STATEMENT

Please see 37 CFR 1.97 and 1.98 to make the appropriate selection(s):

☐ That each item of information contained in the information disclosure statement was first cited in any communication from a foreign patent office in a counterpart foreign application not more than three months prior to the filing of the information disclosure statement. See 37 CFR 1.97(e)(1).

OR

☐ That no item of information contained in the information disclosure statement was cited in a communication from a foreign patent office in a counterpart foreign application, and, to the knowledge of the person signing the certification after making reasonable inquiry, no item of information contained in the information disclosure statement was known to any individual designated in 37 CFR 1.56(c) more than three months prior to the filing of the information disclosure statement. See 37 CFR 1.97(e)(2).

☐ See attached certification statement.

☐ The fee set forth in 37 CFR 1.17 (p) has been submitted herewith.

☒ A certification statement is not submitted herewith.

SIGNATURE

A signature of the applicant or representative is required in accordance with CFR 1.33, 10.18. Please see CFR 1.4(d) for the form of the signature.

Signature	/ Rajendra B. Panwar/	Date (YYYY-MM-DD)	April 3, 2019
Name/Print	Rajendra B. Panwar	Registration Number	63,165

ALL REFERENCES CONSIDERED EXCEPT WHERE LINED THROUGH. /C.M.B/

EAST Search History

EAST Search History (Prior Art)

Ref #	Hits	Search Query	DBs	Default Operator	Plurals	Time Stamp
L10	3	"15830549"	US-PGPUB; USPAT; USOCR; FPRS; EPO; JPO; DERWENT; IBM_TDB	OR	ON	2019/04/24 10:06
S1	2926	(predict$3) with (human or person$2 or woman or man or child or children or female or male or pedestrian) with (vehicle or automobile or motorcycle or moped)	US-PGPUB; USPAT; USOCR; FPRS; EPO; JPO; DERWENT; IBM_TDB	OR	ON	2019/04/23 22:02
S2	1	S1 same ((video near2 segment) with (road near2 scene))	US-PGPUB; USPAT; USOCR; FPRS; EPO; JPO; DERWENT; IBM_TDB	OR	ON	2019/04/23 22:05
S3	1	((video near2 segment) with (road near2 scene))	US-PGPUB; USPAT; USOCR; FPRS; EPO; JPO; DERWENT; IBM_TDB	OR	ON	2019/04/23 22:05
S4	1	((video near2 segment) same (road near2 scene))	US-PGPUB; USPAT; USOCR; FPRS; EPO; JPO; DERWENT; IBM_TDB	OR	ON	2019/04/23 22:05
S5	16	((video near2 segment) same ((road or street or avenue or highway or intersection) with scene))	US-PGPUB; USPAT; USOCR; FPRS; EPO; JPO; DERWENT; IBM_TDB	OR	ON	2019/04/23 22:06
S6	16	((video near2 segment) same ((road or street or avenue or highway or intersection) with (scene)))	US-PGPUB; USPAT; USOCR; FPRS; EPO; JPO; DERWENT; IBM_TDB	OR	ON	2019/04/23 22:06
S7	7	S6 and (stimulus)	US-PGPUB; USPAT; USOCR; FPRS; EPO; JPO; DERWENT; IBM_TDB	OR	ON	2019/04/23 22:06
S8	623	(predict$3) with (human) with (vehicle)	US-PGPUB; USPAT; USOCR; FPRS; EPO; JPO; DERWENT; IBM_TDB	OR	ON	2019/04/23 22:08
S9	0	S8 same (video near2 segment)	US-PGPUB; USPAT; USOCR; FPRS; EPO; JPO; DERWENT;	OR	ON	2019/04/23 22:09

			IBM_TDB			
S10	8	S8 and (video near2 segment)	US-PGPUB; USPAT; USOCR; FPRS; EPO; JPO; DERWENT; IBM_TDB	OR	ON	2019/04/23 22:09
S11	1	(road near2 scene) same (video near2 segment)	US-PGPUB; USPAT; USOCR; FPRS; EPO; JPO; DERWENT; IBM_TDB	OR	ON	2019/04/23 22:18
S12	34	(road near2 scene) and (video near2 segment)	US-PGPUB; USPAT; USOCR; FPRS; EPO; JPO; DERWENT; IBM_TDB	OR	ON	2019/04/23 22:18
S13	26	S12 and (pedestrian or cyclist or vehicle)	US-PGPUB; USPAT; USOCR; FPRS; EPO; JPO; DERWENT; IBM_TDB	OR	ON	2019/04/23 22:19
S15	1	S13 and (stimulus near2 data)	US-PGPUB; USPAT; USOCR; FPRS; EPO; JPO; DERWENT; IBM_TDB	OR	ON	2019/04/23 22:19
S16	1	S13 and (statistical near2 data)	US-PGPUB; USPAT; USOCR; FPRS; EPO; JPO; DERWENT; IBM_TDB	OR	ON	2019/04/23 22:20
S17	34	(road near2 scene) and (video near2 segment)	US-PGPUB; USPAT; USOCR	OR	ON	2019/04/23 22:20
S18	18	S17 AND ((G06T2207/10016 OR G06T7/11 OR G06T2207/30252 OR G06K9/00818 OR G06K9/4609).CPC.)	US-PGPUB; USPAT; USOCR	OR	ON	2019/04/23 22:20
S19	0	S18 and (behavior)	US-PGPUB; USPAT; USOCR	OR	ON	2019/04/23 22:21
S20	2	S17 and (behavior)	US-PGPUB; USPAT; USOCR	OR	ON	2019/04/23 22:21
S21	3	(predict$3 with behavior) with (video near2 (scene or segment))	US-PGPUB; USPAT; USOCR	OR	ON	2019/04/23 22:23
S22	10	(predict$3 with behavior) same (video near2 (scene or segment))	US-PGPUB; USPAT; USOCR	OR	ON	2019/04/23 22:24
S23	8	S22 AND ((G06K9/00711 OR G06K2009/00738 OR G06K9/00765 OR G11B27/034 OR G06F15/16).CPC.)	US-PGPUB; USPAT; USOCR	OR	ON	2019/04/23 22:24
S24	12719	(likelihood) with (pedestrian or cyclist or vehicle)	US-PGPUB; USPAT; USOCR	OR	ON	2019/04/23 22:36
S25	1	S24 same (video near2 segment)	US-PGPUB; USPAT; USOCR	OR	ON	2019/04/23 22:36
S26	39	S24 and (video near2 segment)	US-PGPUB; USPAT; USOCR	OR	ON	2019/04/23 22:37
S27	1	S24 and ((video near2 segment) same (statistical))	US-PGPUB; USPAT; USOCR	OR	ON	2019/04/23 22:38

S28	32737	(likelihood) with (human or person or pedestrian or cyclist or vehicle)	US-PGPUB; USPAT; USOCR	OR	ON	2019/04/23 22:40
S29	12	S28 same (video near2 segment)	US-PGPUB; USPAT; USOCR	OR	ON	2019/04/23 22:40
S30	8940	(predict$3 with behavior) same (driv$3 or motion or action or movement)	US-PGPUB; USPAT; USOCR	OR	ON	2019/04/23 22:43
S31	142	S30 and (video near2 segment)	US-PGPUB; USPAT; USOCR	OR	ON	2019/04/23 22:43
S32	1	S30 same (video near2 segment)	US-PGPUB; USPAT; USOCR	OR	ON	2019/04/23 22:43
S33	3	S30 and ((video near2 segment) same (road or highway or street or avenue or intersection))	US-PGPUB; USPAT; USOCR	OR	ON	2019/04/23 22:45

EAST Search History (Interference)

Ref #	Hits	Search Query	DBs	Default Operator	Plurals	Time Stamp
S34	38	(Sam near3 ANTHONY).in. or (Sid near3 MISRA).in. or (Avery near3 FALLER).in.	US-PGPUB; USPAT	OR	ON	2019/04/23 22:53
S35	0	S34 and 382/104.ccls.	US-PGPUB; USPAT	OR	ON	2019/04/23 22:54
S36	8839	(predict$3 with behavior) same (driv$3 or motion or action or movement)	US-PGPUB; USPAT	OR	ON	2019/04/23 22:54
S37	1	S34 and S36	US-PGPUB; USPAT	OR	ON	2019/04/23 22:54
S38	2148	(predict$3) with (human or person$2 or woman or man or child or children or female or male or pedestrian) with (vehicle or automobile or motorcycle or moped)	US-PGPUB; USPAT	OR	ON	2019/04/23 23:01
S39	1	S34 and S38	US-PGPUB; USPAT	OR	ON	2019/04/23 23:02

4/24/2019 10:07:25 AM
C:\Users\cbaker\Documents\EAST\Workspaces\15830549.wsp

Doc Code: R46C.REQ
Document Description: Request under 37 CFR 1.46(c) to correct, update or change the applicant.

PTO/AIA/41 (04-15)
Approved for use through 11/30/2020. OMB 0651-0031
U.S. Patent and Trademark Office, U.S. DEPARTMENT OF COMMERCE
Under the Paperwork Reduction Act of 1995, no persons are required to respond to a collection of information unless it displays a valid OMB control number.

REQUEST TO CORRECT OR UPDATE THE NAME OF THE APPLICANT UNDER 37 CFR 1.46(c)(1), OR CHANGE THE APPLICANT UNDER 37 CFR 1.46(c)(2)

(FOR USE ONLY IN APPLICATIONS FILED ON OR AFTER SEPTEMBER 16, 2012)

Application Number	15/830,549
Filing Date	12-04-2017
First Named Inventor	Sam ANTHONY
Art Unit	2664
Examiner Name	BAKER, CHARLOTTE M
Practitioner Docket Number	35447-42090/US

To: Commissioner for Patents
P.O. Box 1450
Alexandria, VA 22313-1450

Applicant hereby **requests that the name of the applicant be corrected or updated under 37 CFR 1.46(c)(1), or that the applicant be changed under 37 CFR 1.46(c)(2),** in the above-identified application. **Requests under 37 CFR 1.46(c)(1) or (c)(2) cannot be submitted after payment of the issue fee or if the application has been patented.**

Please check the applicable box(es) below.

☒ 1. This request is to **correct or update the name of the applicant** (**under 37 CFR 1.46(c)(1)**) and includes:

☒ An application data sheet (ADS) in accordance with 37 CFR 1.76(c) with the corrected or updated information shown with markings (*e.g.*, underlining for insertions, strikethrough for deletions). A Corrected Web-based ADS may be used.

Note: Requests under 37 CFR 1.46(c)(1) may be filed to correct typographical errors in the name of the § 1.46 applicant, or for updating the name of the § 1.46 applicant (*i.e.*, where there is no change in the applicant itself but just in the applicant's name). See the Manual of Patent Examining Procedure (MPEP) section 605.01.

☐ 2. This request is to **change the applicant** (**under 37 CFR 1.46(c)(2)**) and includes:

☐ An application data sheet (ADS) in accordance with 37 CFR 1.76(c) that identifies the changes with proper markings (underlining for insertions and strikethrough for deletions). A Corrected Web-based ADS may be used.

☐ A Statement Under 37 CFR 3.73(c) (Form PTO/AIA/96 or equivalent). See MPEP 325.

I am the

☐ applicant* ☒ attorney or agent of record Registration number 63,165 ☐ attorney or agent acting under 37 CFR 1.34 Registration number _____

Signature /Rajendra B. Panwar/
Typed or printed name Rajendra B. Panwar
Date May 30, 2019

NOTE: This form must be signed in accordance with 37 CFR 1.33. See 37 CFR 1.4 for signature requirements and certifications. *Juristic entities must be represented by a patent practitioner (See 37 CFR 1.31, applicable to any paper filed on or after September 16, 2012 that is presented on behalf of a juristic entity, regardless of application filing date). Submit multiple forms if more than one signature is required, see below**.

☐ ** Total of _____ forms are submitted.

This collection of information is required by 37 CFR 1.36. The information is required to obtain or retain a benefit by the public which is to file (and by the USPTO to process) an application. Confidentiality is governed by 35 U.S.C. 122 and 37 CFR 1.11 and 1.14. This collection is estimated to take 12 minutes to complete, including gathering, preparing, and submitting the completed application form to the USPTO. Time will vary depending upon the individual case. Any comments on the amount of time you require to complete this form and/or suggestions for reducing this burden, should be sent to the Chief Information Officer, U.S. Patent and Trademark Office, U.S. Department of Commerce, P.O. Box 1450, Alexandria, VA 22313-1450. DO NOT SEND FEES OR COMPLETED FORMS TO THIS ADDRESS. **SEND TO: Commissioner for Patents, P.O. Box 1450, Alexandria, VA 22313-1450.**

If you need assistance in completing the form, call 1-800-PTO-9199 and select option 2.

Privacy Act Statement

The **Privacy Act of 1974 (P.L. 93-579)** requires that you be given certain information in connection with your submission of the attached form related to a patent application or patent. Accordingly, pursuant to the requirements of the Act, please be advised that: (1) the general authority for the collection of this information is 35 U.S.C. 2(b)(2); (2) furnishing of the information solicited is voluntary; and (3) the principal purpose for which the information is used by the U.S. Patent and Trademark Office is to process and/or examine your submission related to a patent application or patent. If you do not furnish the requested information, the U.S. Patent and Trademark Office may not be able to process and/or examine your submission, which may result in termination of proceedings or abandonment of the application or expiration of the patent.

The information provided by you in this form will be subject to the following routine uses:

1. The information on this form will be treated confidentially to the extent allowed under the Freedom of Information Act (5 U.S.C. 552) and the Privacy Act (5 U.S.C 552a). Records from this system of records may be disclosed to the Department of Justice to determine whether disclosure of these records is required by the Freedom of Information Act.
2. A record from this system of records may be disclosed, as a routine use, in the course of presenting evidence to a court, magistrate, or administrative tribunal, including disclosures to opposing counsel in the course of settlement negotiations.
3. A record in this system of records may be disclosed, as a routine use, to a Member of Congress submitting a request involving an individual, to whom the record pertains, when the individual has requested assistance from the Member with respect to the subject matter of the record.
4. A record in this system of records may be disclosed, as a routine use, to a contractor of the Agency having need for the information in order to perform a contract. Recipients of information shall be required to comply with the requirements of the Privacy Act of 1974, as amended, pursuant to 5 U.S.C. 552a(m).
5. A record related to an International Application filed under the Patent Cooperation Treaty in this system of records may be disclosed, as a routine use, to the International Bureau of the World Intellectual Property Organization, pursuant to the Patent Cooperation Treaty.
6. A record in this system of records may be disclosed, as a routine use, to another federal agency for purposes of National Security review (35 U.S.C. 181) and for review pursuant to the Atomic Energy Act (42 U.S.C. 218(c)).
7. A record from this system of records may be disclosed, as a routine use, to the Administrator, General Services, or his/her designee, during an inspection of records conducted by GSA as part of that agency's responsibility to recommend improvements in records management practices and programs, under authority of 44 U.S.C. 2904 and 2906. Such disclosure shall be made in accordance with the GSA regulations governing inspection of records for this purpose, and any other relevant (*i.e.*, GSA or Commerce) directive. Such disclosure shall not be used to make determinations about individuals.
8. A record from this system of records may be disclosed, as a routine use, to the public after either publication of the application pursuant to 35 U.S.C. 122(b) or issuance of a patent pursuant to 35 U.S.C. 151. Further, a record may be disclosed, subject to the limitations of 37 CFR 1.14, as a routine use, to the public if the record was filed in an application which became abandoned or in which the proceedings were terminated and which application is referenced by either a published application, an application open to public inspection or an issued patent.
9. A record from this system of records may be disclosed, as a routine use, to a Federal, State, or local law enforcement agency, if the USPTO becomes aware of a violation or potential violation of law or regulation.

Supplemental Application Data Sheet

PTO/AIA/14 (11-15)
Approved for use through 04/30/2017. OMB 0651-0032
U.S. Patent and Trademark Office; U.S. DEPARTMENT OF COMMERCE

Under the Paperwork Reduction Act of 1995, no persons are required to respond to a collection of information unless it contains a valid OMB control number.

Application Data Sheet 37 CFR 1.76	Attorney Docket Number	2210871.00123US2
	Application Number	15/830,549
Title of Invention	SYSTEM AND METHOD OF PREDICTING HUMAN INTERACTION WITH VEHICLES	

The application data sheet is part of the provisional or nonprovisional application for which it is being submitted. The following form contains the bibliographic data arranged in a format specified by the United States Patent and Trademark Office as outlined in 37 CFR 1.76.
This document may be completed electronically and submitted to the Office in electronic format using the Electronic Filing System (EFS) or the document may be printed and included in a paper filed application.

Secrecy Order 37 CFR 5.2:

☐ Portions or all of the application associated with this Application Data Sheet may fall under a Secrecy Order pursuant to 37 CFR 5.2 (Paper filers only. Applications that fall under Secrecy Order may not be filed electronically.)

Inventor Information:

Inventor 1 Remove

Legal Name

Prefix	Given Name	Middle Name	Family Name	Suffix
Mr.	Sam		ANTHONY	

Residence Information (Select One) ● US Residency Non US Residency Active US Military Service

City	Cambridge	State/Province	MA	Country of Residence i	US

Mailing Address of Inventor:

Address 1	10 Ware Street
Address 2	
City	Cambridge
State/Province	MA
Postal Code	02138
Country i	US

Inventor 2 Remove

Legal Name

Prefix	Given Name	Middle Name	Family Name	Suffix
Mr.	Sid		MISRA	

Residence Information (Select One) ◉ US Residency Non US Residency Active US Military Service

City	Cambridge	State/Province	MA	Country of Residence i	US

Mailing Address of Inventor:

Address 1	10 Ware Street
Address 2	
City	Cambridge
State/Province	MA
Postal Code	02138
Country i	US

Inventor 3 Remove

Legal Name

Prefix	Given Name	Middle Name	Family Name	Suffix
Mr.	Avery		FALLER	

Residence Information (Select One) ◉ US Residency Non US Residency Active US Military Service

Under the Paperwork Reduction Act of 1995, no persons are required to respond to a collection of information unless it contains a valid OMB control number.

Application Data Sheet 37 CFR 1.76	Attorney Docket Number	2210871.00123US2
	Application Number	
Title of Invention	SYSTEM AND METHOD OF PREDICTING HUMAN INTERACTION WITH VEHICLES	

City	Cambridge	**State/Province**	MA	**Country of Residence**	US

Mailing Address of Inventor:

Address 1	10 Ware Street		
Address 2			
City	Cambridge	**State/Province**	MA
Postal Code	02138	**Country**	US

All Inventors Must Be Listed - Additional Inventor Information blocks may be generated within this form by selecting the **Add** button. Add

Correspondence Information:

Enter either Customer Number or complete the Correspondence Information section below. For further information see 37 CFR 1.33(a).

☐ **An Address is being provided for the correspondence Information of this application.**

Customer Number	23483		
Email Address		Add Email	Remove Email

Application Information:

Title of the Invention	SYSTEM AND METHOD OF PREDICTING HUMAN INTERACTION WITH VEHICLES		
Attorney Docket Number	2210871.00123US2	**Small Entity Status Claimed**	☒
Application Type	Nonprovisional		
Subject Matter	Utility		
Total Number of Drawing Sheets (if any)	11	**Suggested Figure for Publication (if any)**	10

Filing By Reference:

Only complete this section when filing an application by reference under 35 U.S.C. 111(c) and 37 CFR 1.57(a). Do not complete this section if application papers including a specification and any drawings are being filed. Any domestic benefit or foreign priority information must be provided in the appropriate section(s) below (i.e., "Domestic Benefit/National Stage Information" and "Foreign Priority Information").

For the purposes of a filing date under 37 CFR 1.53(b), the description and any drawings of the present application are replaced by this reference to the previously filed application, subject to conditions and requirements of 37 CFR 1.57(a).

Application number of the previously filed application	Filing date (YYYY-MM-DD)	Intellectual Property Authority or Country

Publication Information:

☐ Request Early Publication (Fee required at time of Request 37 CFR 1.219)

☐ **Request Not to Publish.** I hereby request that the attached application not be published under 35 U.S.C. 122(b) and certify that the invention disclosed in the attached application **has not and will not** be the subject of an application filed in another country, or under a multilateral international agreement, that requires publication at eighteen months after filing.

Under the Paperwork Reduction Act of 1995, no persons are required to respond to a collection of information unless it contains a valid OMB control number.

Application Data Sheet 37 CFR 1.76	Attorney Docket Number	2210871.00123US2
	Application Number	
Title of Invention	SYSTEM AND METHOD OF PREDICTING HUMAN INTERACTION WITH VEHICLES	

Representative Information:

Representative information should be provided for all practitioners having a power of attorney in the application. Providing this information in the Application Data Sheet does not constitute a power of attorney in the application (see 37 CFR 1.32).
Either enter Customer Number or complete the Representative Name section below. If both sections are completed the customer Number will be used for the Representative Information during processing.

Please Select One:	● Customer Number	US Patent Practitioner	◯ Limited Recognition (37 CFR 11.9)
Customer Number	23483		

Domestic Benefit/National Stage Information:

This section allows for the applicant to either claim benefit under 35 U.S.C. 119(e), 120, 121, 365(c), or 386(c) or indicate National Stage entry from a PCT application. Providing benefit claim information in the Application Data Sheet constitutes the specific reference required by 35 U.S.C. 119(e) or 120, and 37 CFR 1.78.
When referring to the current application, please leave the "Application Number" field blank.

Prior Application Status	Pending		Remove
Application Number	Continuity Type	Prior Application Number	Filing or 371(c) Date (YYYY-MM-DD)
	Claims benefit of provisional	62/528771	2017-07-05

Additional Domestic Benefit/National Stage Data may be generated within this form by selecting the **Add** button. Add

Foreign Priority Information:

This section allows for the applicant to claim priority to a foreign application. Providing this information in the application data sheet constitutes the claim for priority as required by 35 U.S.C. 119(b) and 37 CFR 1.55. When priority is claimed to a foreign application that is eligible for retrieval under the priority document exchange program (PDX)[i] the information will be used by the Office to automatically attempt retrieval pursuant to 37 CFR 1.55(i)(1) and (2). Under the PDX program, applicant bears the ultimate responsibility for ensuring that a copy of the foreign application is received by the Office from the participating foreign intellectual property office, or a certified copy of the foreign priority application is filed, within the time period specified in 37 CFR 1.55(g)(1).

Remove

Application Number	Country[i]	Filing Date (YYYY-MM-DD)	Access Code[i] (if applicable)

Additional Foreign Priority Data may be generated within this form by selecting the **Add** button. Add

Under the Paperwork Reduction Act of 1995, no persons are required to respond to a collection of information unless it contains a valid OMB control number.

Application Data Sheet 37 CFR 1.76	Attorney Docket Number	2210871.00123US2
	Application Number	
Title of Invention	SYSTEM AND METHOD OF PREDICTING HUMAN INTERACTION WITH VEHICLES	

Statement under 37 CFR 1.55 or 1.78 for AIA (First Inventor to File) Transition Applications

☐ This application (1) claims priority to or the benefit of an application filed before March 16, 2013 and (2) also contains, or contained at any time, a claim to a claimed invention that has an effective filing date on or after March 16, 2013.
NOTE: By providing this statement under 37 CFR 1.55 or 1.78, this application, with a filing date on or after March 16, 2013, will be examined under the first inventor to file provisions of the AIA.

Application Data Sheet 37 CFR 1.76	Attorney Docket Number	2210871.00123US2
	Application Number	
Title of Invention	SYSTEM AND METHOD OF PREDICTING HUMAN INTERACTION WITH VEHICLES	

Authorization or Opt-Out of Authorization to Permit Access:

When this Application Data Sheet is properly signed and filed with the application, applicant has provided written authority to permit a participating foreign intellectual property (IP) office access to the instant application-as-filed (see paragraph A in subsection 1 below) and the European Patent Office (EPO) access to any search results from the instant application (see paragraph B in subsection 1 below).

Should applicant choose not to provide an authorization identified in subsection 1 below, applicant **must opt-out** of the authorization by checking the corresponding box A or B or both in subsection 2 below.

NOTE: This section of the Application Data Sheet is **ONLY** reviewed and processed with the **INITIAL** filing of an application. After the initial filing of an application, an Application Data Sheet cannot be used to provide or rescind authorization for access by a foreign IP office(s). Instead, Form PTO/SB/39 or PTO/SB/69 must be used as appropriate.

1. Authorization to Permit Access by a Foreign Intellectual Property Office(s)

A. Priority Document Exchange (PDX) - Unless box A in subsection 2 (opt-out of authorization) is checked, the undersigned hereby **grants the USPTO authority** to provide the European Patent Office (EPO), the Japan Patent Office (JPO), the Korean Intellectual Property Office (KIPO), the State Intellectual Property Office of the People's Republic of China (SIPO), the World Intellectual Property Organization (WIPO), and any other foreign intellectual property office participating with the USPTO in a bilateral or multilateral priority document exchange agreement in which a foreign application claiming priority to the instant patent application is filed, access to: (1) the instant patent application-as-filed and its related bibliographic data, (2) any foreign or domestic application to which priority or benefit is claimed by the instant application and its related bibliographic data, and (3) the date of filing of this Authorization. See 37 CFR 1.14(h)(1).

B. Search Results from U.S. Application to EPO - Unless box B in subsection 2 (opt-out of authorization) is checked, the undersigned hereby **grants the USPTO authority** to provide the EPO access to the bibliographic data and search results from the instant patent application when a European patent application claiming priority to the instant patent application is filed. See 37 CFR 1.14(h)(2).

The applicant is reminded that the EPO's Rule 141(1) EPC (European Patent Convention) requires applicants to submit a copy of search results from the instant application without delay in a European patent application that claims priority to the instant application.

2. Opt-Out of Authorizations to Permit Access by a Foreign Intellectual Property Office(s)

☐ A. Applicant **DOES NOT** authorize the USPTO to permit a participating foreign IP office access to the instant application-as-filed. If this box is checked, the USPTO will not be providing a participating foreign IP office with any documents and information identified in subsection 1A above.

☐ B. Applicant **DOES NOT** authorize the USPTO to transmit to the EPO any search results from the instant patent application. If this box is checked, the USPTO will not be providing the EPO with search results from the instant application.

NOTE: Once the application has published or is otherwise publicly available, the USPTO may provide access to the application in accordance with 37 CFR 1.14.

Under the Paperwork Reduction Act of 1995, no persons are required to respond to a collection of information unless it contains a valid OMB control number.

Application Data Sheet 37 CFR 1.76	Attorney Docket Number	2210871.00123US2
	Application Number	
Title of Invention	SYSTEM AND METHOD OF PREDICTING HUMAN INTERACTION WITH VEHICLES	

Applicant Information:

Providing assignment information in this section does not substitute for compliance with any requirement of part 3 of Title 37 of CFR to have an assignment recorded by the Office.

Applicant 1 Remove

If the applicant is the inventor (or the remaining joint inventor or inventors under 37 CFR 1.45), this section should not be completed. The information to be provided in this section is the name and address of the legal representative who is the applicant under 37 CFR 1.43; or the name and address of the assignee, person to whom the inventor is under an obligation to assign the invention, or person who otherwise shows sufficient proprietary interest in the matter who is the applicant under 37 CFR 1.46. If the applicant is an applicant under 37 CFR 1.46 (assignee, person to whom the inventor is obligated to assign, or person who otherwise shows sufficient proprietary interest) together with one or more joint inventors, then the joint inventor or inventors who are also the applicant should be identified in this section.

Clear

● Assignee	Legal Representative under 35 U.S.C. 117	Joint Inventor
Person to whom the inventor is obligated to assign.	Person who shows sufficient proprietary interest	

If applicant is the legal representative, indicate the authority to file the patent application, the inventor is:

Name of the Deceased or Legally Incapacitated Inventor:

If the Applicant is an Organization check here. ☒

Organization Name ~~Perceptive Automata~~ Perceptive Automata, Inc.

Mailing Address Information For Applicant:

Address 1	10 Ware Street		
Address 2			
City	Cambridge	**State/Province**	MA
Country	US	Postal Code	02138
Phone Number		Fax Number	
Email Address			

Additional Applicant Data may be generated within this form by selecting the Add button. Add

Assignee Information including Non-Applicant Assignee Information:

Providing assignment information in this section does not substitute for compliance with any requirement of part 3 of Title 37 of CFR to have an assignment recorded by the Office.

Under the Paperwork Reduction Act of 1995, no persons are required to respond to a collection of information unless it contains a valid OMB control number.

Application Data Sheet 37 CFR 1.76	Attorney Docket Number	2210871.00123US2
	Application Number	
Title of Invention	SYSTEM AND METHOD OF PREDICTING HUMAN INTERACTION WITH VEHICLES	

Assignee 1

Complete this section if assignee information, including non-applicant assignee information, is desired to be included on the patent application publication. An assignee-applicant identified in the "Applicant Information" section will appear on the patent application publication as an applicant. For an assignee-applicant, complete this section only if identification as an assignee is also desired on the patent application publication.

Remove

If the Assignee or Non-Applicant Assignee is an Organization check here. ☐

Prefix	**Given Name**	Middle Name	**Family Name**	Suffix

Mailing Address Information For Assignee including Non-Applicant Assignee:

Address 1			
Address 2			
City		**State/Province**	
Country i		Postal Code	
Phone Number		Fax Number	
Email Address			

Additional Assignee or Non-Applicant Assignee Data may be generated within this form by selecting the Add button. Add

Signature:

Remove

NOTE: This Application Data Sheet must be signed in accordance with 37 CFR 1.33(b). **However, if this Application Data Sheet is submitted with the INITIAL filing of the application and either box A or B is not checked in subsection 2 of the "Authorization or Opt-Out of Authorization to Permit Access" section, then this form must also be signed in accordance with 37 CFR 1.14(c).**

This Application Data Sheet **must** be signed by a patent practitioner if one or more of the applicants is a **juristic entity** (e.g., corporation or association). If the applicant is two or more joint inventors, this form must be signed by a patent practitioner, **all** joint inventors who are the applicant, or one or more joint inventor-applicants who have been given power of attorney (e.g., see USPTO Form PTO/AIA/81) on behalf of **all** joint inventor-applicants.

See 37 CFR 1.4(d) for the manner of making signatures and certifications.

Signature	/Rajendra Panwar/			Date (YYYY-MM-DD)	2019-05-30
First Name	Rajendra B.	Last Name	Panwar	Registration Number	63,165

Additional Signature may be generated within this form by selecting the Add button. Add

Under the Paperwork Reduction Act of 1995, no persons are required to respond to a collection of information unless it contains a valid OMB control number.

Application Data Sheet 37 CFR 1.76	Attorney Docket Number	2210871.00123US2
	Application Number	
Title of Invention	SYSTEM AND METHOD OF PREDICTING HUMAN INTERACTION WITH VEHICLES	

This collection of information is required by 37 CFR 1.76. The information is required to obtain or retain a benefit by the public which is to file (and by the USPTO to process) an application. Confidentiality is governed by 35 U.S.C. 122 and 37 CFR 1.14. This collection is estimated to take 23 minutes to complete, including gathering, preparing, and submitting the completed application data sheet form to the USPTO. Time will vary depending upon the individual case. Any comments on the amount of time you require to complete this form and/or suggestions for reducing this burden, should be sent to the Chief Information Officer, U.S. Patent and Trademark Office, U.S. Department of Commerce, P.O. Box 1450, Alexandria, VA 22313-1450. DO NOT SEND FEES OR COMPLETED FORMS TO THIS ADDRESS. **SEND TO: Commissioner for Patents, P.O. Box 1450, Alexandria, VA 22313-1450.**

Privacy Act Statement

The Privacy Act of 1974 (P.L. 93-579) requires that you be given certain information in connection with your submission of the attached form related to a patent application or patent. Accordingly, pursuant to the requirements of the Act, please be advised that: (1) the general authority for the collection of this information is 35 U.S.C. 2(b)(2); (2) furnishing of the information solicited is voluntary; and (3) the principal purpose for which the information is used by the U.S. Patent and Trademark Office is to process and/or examine your submission related to a patent application or patent. If you do not furnish the requested information, the U.S. Patent and Trademark Office may not be able to process and/or examine your submission, which may result in termination of proceedings or abandonment of the application or expiration of the patent.

The information provided by you in this form will be subject to the following routine uses:

1 The information on this form will be treated confidentially to the extent allowed under the Freedom of Information Act (5 U.S.C. 552) and the Privacy Act (5 U.S.C. 552a). Records from this system of records may be disclosed to the Department of Justice to determine whether the Freedom of Information Act requires disclosure of these records.

2. A record from this system of records may be disclosed, as a routine use, in the course of presenting evidence to a court, magistrate, or administrative tribunal, including disclosures to opposing counsel in the course of settlement negotiations.

3 A record in this system of records may be disclosed, as a routine use, to a Member of Congress submitting a request involving an individual, to whom the record pertains, when the individual has requested assistance from the Member with respect to the subject matter of the record.

4. A record in this system of records may be disclosed, as a routine use, to a contractor of the Agency having need for the information in order to perform a contract. Recipients of information shall be required to comply with the requirements of the Privacy Act of 1974, as amended, pursuant to 5 U.S.C. 552a(m).

5. A record related to an International Application filed under the Patent Cooperation Treaty in this system of records may be disclosed, as a routine use, to the International Bureau of the World Intellectual Property Organization, pursuant to the Patent CooperationTreaty.

6. A record in this system of records may be disclosed, as a routine use, to another federal agency for purposes of National Security review (35 U.S.C. 181) and for review pursuant to the Atomic Energy Act (42 U.S.C. 218(c)).

7. A record from this system of records may be disclosed, as a routine use, to the Administrator, General Services, or his/her designee, during an inspection of records conducted by GSA as part of that agency's responsibility to recommend improvements in records management practices and programs, under authority of 44 U.S.C. 2904 and 2906. Such disclosure shall be made in accordance with the GSA regulations governing inspection of records for this purpose, and any other relevant (i.e., GSA or Commerce) directive. Such disclosure shall not be used to make determinations about individuals.

8. A record from this system of records may be disclosed, as a routine use, to the public after either publication of the application pursuant to 35 U.S.C. 122(b) or issuance of a patent pursuant to 35 U.S.C. 151. Further, a record may be disclosed, subject to the limitations of 37 CFR 1.14, as a routine use, to the public if the record was filed in an application which became abandoned or in which the proceedings were terminated and which application is referenced by either a published application, an application open to public inspections or an issued patent.

9. A record from this system of records may be disclosed, as a routine use, to a Federal, State, or local law enforcement agency, if the USPTO becomes aware of a violation or potential violation of law or regulation.

PTO/AIA/82A (07-13)
Approved for use through 01/31/2018. OMB 0651-0035
U.S. Patent and Trademark Office; U.S. DEPARTMENT OF COMMERCE
Under the Paperwork Reduction Act of 1995, no persons are required to respond to a collection of information unless it displays a valid OMB control number.

TRANSMITTAL FOR POWER OF ATTORNEY TO ONE OR MORE REGISTERED PRACTITIONERS

NOTE: This form is to be submitted with the Power of Attorney by Applicant form (PTO/AIA/82B) to identify the application to which the Power of Attorney is directed, in accordance with 37 CFR 1.5, unless the application number and filing date are identified in the Power of Attorney by Applicant form. If neither form PTO/AIA/82A nor form PTO/AIA82B identifies the application to which the Power of Attorney is directed, the Power of Attorney will not be recognized in the application.

Application Number	15/830,549
Filing Date	12-04-2017
First Named Inventor	Sam Anthony
Title	SYSTEM AND METHOD OF PREDICTING HUMAN INTERACTION WITH VEHICLES
Art Unit	n/a
Examiner Name	n/a
Attorney Docket Number	35447-42090/US

SIGNATURE of Applicant or Patent Practitioner

Signature	/Rajendra B. Panwar/	Date (Optional)	May 30, 2019
Name	Rajendra B. Panwar	Registration Number	63,165
Title (if Applicant is a juristic entity)	Attorney for Applicant		
Applicant Name (if Applicant is a juristic entity)	Perceptive Automata, Inc.		

NOTE: This form must be signed in accordance with 37 CFR 1.33. See 37 CFR 1.4(d) for signature requirements and certifications. If more than one applicant, use multiple forms.

☑ *Total of 1 forms are submitted.

This collection of information is required by 37 CFR 1.131, 1.32, and 1.33. The information is required to obtain or retain a benefit by the public which is to file (and by the USPTO to process) an application. Confidentiality is governed by 35 U.S.C. 122 and 37 CFR 1.11 and 1.14. This collection is estimated to take 3 minutes to complete, including gathering, preparing, and submitting the completed application form to the USPTO. Time will vary depending upon the individual case. Any comments on the amount of time you require to complete this form and/or suggestions for reducing this burden, should be sent to the Chief Information Officer, U.S. Patent and Trademark Office, U.S. Department of Commerce, P.O. Box 1450, Alexandria, VA 22313-1450. DO NOT SEND FEES OR COMPLETED FORMS TO THIS ADDRESS. **SEND TO: Commissioner for Patents, P.O. Box 1450, Alexandria, VA 22313-1450.**

If you need assistance in completing the form, call 1-800-PTO-9199 and select option 2.

Doc Code: PA..
Document Description: Power of Attorney

PTO/AIA/82B (07-13)
Approved for use through 01/31/2018. OMB 0651-0035
U.S. Patent and Trademark Office; U.S. DEPARTMENT OF COMMERCE
Under the Paperwork Reduction Act of 1995, no persons are required to respond to a collection of information unless it displays a valid OMB control number

POWER OF ATTORNEY BY APPLICANT

I hereby revoke all previous powers of attorney given in the application identified in either the attached transmittal letter or the boxes below.

Application Number	Filing Date

(Note: The boxes above may be left blank if information is provided on form PTO/AIA/82A.)

☑ I hereby appoint the Patent Practitioner(s) associated with the following Customer Number as my/our attorney(s) or agent(s), and to transact all business in the United States Patent and Trademark Office connected therewith for the application referenced in the attached transmittal letter (form PTO/AIA/82A) or identified above: 00758

OR

☐ I hereby appoint Practitioner(s) named in the attached list (form PTO/AIA/82C) as my/our attorney(s) or agent(s), and to transact all business in the United States Patent and Trademark Office connected therewith for the patent application referenced in the attached transmittal letter (form PTO/AIA/82A) or identified above. (Note: Complete form PTO/AIA/82C.)

Please recognize or change the correspondence address for the application identified in the attached transmittal letter or the boxes above to:

☑ The address associated with the above-mentioned Customer Number

OR

☐ The address associated with Customer Number:

OR

☐ Firm or Individual Name					
Address					
City		State		Zip	
Country					
Telephone		Email			

I am the Applicant (if the Applicant is a juristic entity, list the Applicant name in the box):

PERCEPTIVE AUTOMATA, INC.

☐ Inventor or Joint Inventor (title not required below)

☐ Legal Representative of a Deceased or Legally Incapacitated Inventor (title not required below)

☑ Assignee or Person to Whom the Inventor is Under an Obligation to Assign (provide signer's title if applicant is a juristic entity)

☐ Person Who Otherwise Shows Sufficient Proprietary Interest (e.g., a petition under 37 CFR 1.46(b)(2) was granted in the application or is concurrently being filed with this document) (provide signer's title if applicant is a juristic entity)

SIGNATURE of Applicant for Patent

The undersigned (whose title is supplied below) is authorized to act on behalf of the applicant (e.g., where the applicant is a juristic entity).

Signature		Date (Optional)	
Name	Kshitij "Sid" Misra		
Title	Chief Executive Officer		

NOTE: Signature - This form must be signed by the applicant in accordance with 37 CFR 1.33. See 37 CFR 1.4 for signature requirements and certifications. If more than one applicant, use multiple forms.

☑ Total of 1 forms are submitted.

This collection of information is required by 37 CFR 1.131, 1.32, and 1.33. The information is required to obtain or retain a benefit by the public which is to file (and by the USPTO to process) an application. Confidentiality is governed by 35 U.S.C. 122 and 37 CFR 1.11 and 1.14. This collection is estimated to take 3 minutes to complete, including gathering, preparing, and submitting the completed application form to the USPTO. Time will vary depending upon the individual case. Any comments on the amount of time you require to complete this form and/or suggestions for reducing this burden, should be sent to the Chief Information Officer, U.S. Patent and Trademark Office, U.S. Department of Commerce, P.O. Box 1450, Alexandria, VA 22313-1450. DO NOT SEND FEES OR COMPLETED FORMS TO THIS ADDRESS. **SEND TO: Commissioner for Patents, P.O. Box 1450, Alexandria, VA 22313-1450.**

If you need assistance in completing the form, call 1-800-PTO-9199 and select option 1.

Under the Paperwork Reduction Act of 1995, no persons are required to respond to a collection of information unless it displays a valid OMB control number.

STATEMENT UNDER 37 CFR 3.73(c)

Applicant/Patent Owner: Perceptive Automata, Inc.

Application No./Patent No.: 15/830,549 Filed/Issue Date: 12-04-2017

Titled: SYSTEM AND METHOD OF PREDICTING HUMAN INTERACTION WITH VEHICLES

Perceptive Automata, Inc., a corporation

(Name of Assignee) (Type of Assignee, e.g., corporation, partnership, university, government agency, etc.)

states that, for the patent application/patent identified above, it is (choose **one** of options 1, 2, 3 or 4 below):

1. ☑ The assignee of the entire right, title, and interest.

2. ☐ An assignee of less than the entire right, title, and interest (check applicable box):

☐ The extent (by percentage) of its ownership interest is _____%. Additional Statement(s) by the owners holding the balance of the interest must be submitted to account for 100% of the ownership interest.

☐ There are unspecified percentages of ownership. The other parties, including inventors, who together own the entire right, title and interest are:

Additional Statement(s) by the owner(s) holding the balance of the interest must be submitted to account for the entire right, title, and interest.

3. ☐ The assignee of an undivided interest in the entirety (a complete assignment from one of the joint inventors was made). The other parties, including inventors, who together own the entire right, title, and interest are:

Additional Statement(s) by the owner(s) holding the balance of the interest must be submitted to account for the entire right, title, and interest.

4. ☐ The recipient, via a court proceeding or the like (*e.g.*, bankruptcy, probate), of an undivided interest in the entirety (a complete transfer of ownership interest was made). The certified document(s) showing the transfer is attached.

The interest identified in option 1, 2 or 3 above (not option 4) is evidenced by either (choose **one** of options A or B below):

A. ☐ An assignment from the inventor(s) of the patent application/patent identified above. The assignment was recorded in the United States Patent and Trademark Office at Reel _____, Frame _____, or for which a copy thereof is attached.

B. ☑ A chain of title from the inventor(s), of the patent application/patent identified above, to the current assignee as follows:

1. From: Sam Anthony, et al. To: Perceptive Automata

The document was recorded in the United States Patent and Trademark Office at Reel 045672, Frame 0956, or for which a copy thereof is attached.

2. From: Sam Anthony, et al. To: Perceptive Automata, Inc.

The document was recorded in the United States Patent and Trademark Office at Reel 049284, Frame 0423, or for which a copy thereof is attached.

This collection of information is required by 37 CFR 3.73(b). The information is required to obtain or retain a benefit by the public which is to file (and by the USPTO to process) an application. Confidentiality is governed by 35 U.S.C. 122 and 37 CFR 1.11 and 1.14. This collection is estimated to take 12 minutes to complete, including gathering, preparing, and submitting the completed application form to the USPTO. Time will vary depending upon the individual case. Any comments on the amount of time you require to complete this form and/or suggestions for reducing this burden, should be sent to the Chief Information Officer, U.S. Patent and Trademark Office, U.S. Department of Commerce, P.O. Box 1450, Alexandria, VA 22313-1450. DO NOT SEND FEES OR COMPLETED FORMS TO THIS ADDRESS. **SEND TO: Commissioner for Patents, P.O. Box 1450, Alexandria, VA 22313-1450.**

If you need assistance in completing the form, call 1-800-PTO-9199 and select option 2.

Under the Paperwork Reduction Act of 1995, no persons are required to respond to a collection of information unless it displays a valid OMB control number.

STATEMENT UNDER 37 CFR 3.73(c)

3. From: _____ To: _____

The document was recorded in the United States Patent and Trademark Office at

Reel _____, Frame _____, or for which a copy thereof is attached.

4. From: _____ To: _____

The document was recorded in the United States Patent and Trademark Office at

Reel _____, Frame _____, or for which a copy thereof is attached.

5. From: _____ To: _____

The document was recorded in the United States Patent and Trademark Office at

Reel _____, Frame _____, or for which a copy thereof is attached.

6. From: _____ To: _____

The document was recorded in the United States Patent and Trademark Office at

Reel _____, Frame _____, or for which a copy thereof is attached.

☐ Additional documents in the chain of title are listed on a supplemental sheet(s).

☑ As required by 37 CFR 3.73(c)(1)(i), the documentary evidence of the chain of title from the original owner to the assignee was, or concurrently is being, submitted for recordation pursuant to 37 CFR 3.11.

[NOTE: A separate copy (i.e., a true copy of the original assignment document(s)) must be submitted to Assignment Division in accordance with 37 CFR Part 3, to record the assignment in the records of the USPTO. See MPEP 302.08]

The undersigned (whose title is supplied below) is authorized to act on behalf of the assignee.

/Rajendra B. Panwar/	May 30, 2019
Signature	Date
Rajendra B. Panwar	63,165
Printed or Typed Name	Title or Registration Number

Privacy Act Statement

The **Privacy Act of 1974 (P.L. 93-579)** requires that you be given certain information in connection with your submission of the attached form related to a patent application or patent. Accordingly, pursuant to the requirements of the Act, please be advised that: (1) the general authority for the collection of this information is 35 U.S.C. 2(b)(2); (2) furnishing of the information solicited is voluntary; and (3) the principal purpose for which the information is used by the U.S. Patent and Trademark Office is to process and/or examine your submission related to a patent application or patent. If you do not furnish the requested information, the U.S. Patent and Trademark Office may not be able to process and/or examine your submission, which may result in termination of proceedings or abandonment of the application or expiration of the patent.

The information provided by you in this form will be subject to the following routine uses:

1. The information on this form will be treated confidentially to the extent allowed under the Freedom of Information Act (5 U.S.C. 552) and the Privacy Act (5 U.S.C 552a). Records from this system of records may be disclosed to the Department of Justice to determine whether disclosure of these records is required by the Freedom of Information Act.
2. A record from this system of records may be disclosed, as a routine use, in the course of presenting evidence to a court, magistrate, or administrative tribunal, including disclosures to opposing counsel in the course of settlement negotiations.
3. A record in this system of records may be disclosed, as a routine use, to a Member of Congress submitting a request involving an individual, to whom the record pertains, when the individual has requested assistance from the Member with respect to the subject matter of the record.
4. A record in this system of records may be disclosed, as a routine use, to a contractor of the Agency having need for the information in order to perform a contract. Recipients of information shall be required to comply with the requirements of the Privacy Act of 1974, as amended, pursuant to 5 U.S.C. 552a(m).
5. A record related to an International Application filed under the Patent Cooperation Treaty in this system of records may be disclosed, as a routine use, to the International Bureau of the World Intellectual Property Organization, pursuant to the Patent Cooperation Treaty.
6. A record in this system of records may be disclosed, as a routine use, to another federal agency for purposes of National Security review (35 U.S.C. 181) and for review pursuant to the Atomic Energy Act (42 U.S.C. 218(c)).
7. A record from this system of records may be disclosed, as a routine use, to the Administrator, General Services, or his/her designee, during an inspection of records conducted by GSA as part of that agency's responsibility to recommend improvements in records management practices and programs, under authority of 44 U.S.C. 2904 and 2906. Such disclosure shall be made in accordance with the GSA regulations governing inspection of records for this purpose, and any other relevant (*i.e.*, GSA or Commerce) directive. Such disclosure shall not be used to make determinations about individuals.
8. A record from this system of records may be disclosed, as a routine use, to the public after either publication of the application pursuant to 35 U.S.C. 122(b) or issuance of a patent pursuant to 35 U.S.C. 151. Further, a record may be disclosed, subject to the limitations of 37 CFR 1.14, as a routine use, to the public if the record was filed in an application which became abandoned or in which the proceedings were terminated and which application is referenced by either a published application, an application open to public inspection or an issued patent.
9. A record from this system of records may be disclosed, as a routine use, to a Federal, State, or local law enforcement agency, if the USPTO becomes aware of a violation or potential violation of law or regulation.

Electronic Acknowledgement Receipt

EFS ID:	36160170
Application Number:	15830549
International Application Number:	
Confirmation Number:	8998
Title of Invention:	SYSTEM AND METHOD OF PREDICTING HUMAN INTERACTION WITH VEHICLES
First Named Inventor/Applicant Name:	Sam ANTHONY
Customer Number:	23483
Filer:	Rajendra Bhagwatisingh Panwar
Filer Authorized By:	
Attorney Docket Number:	2210871.00123US2
Receipt Date:	30-MAY-2019
Filing Date:	04-DEC-2017
Time Stamp:	17:57:08
Application Type:	Utility under 35 USC 111(a)

Payment information:

Submitted with Payment	no

File Listing:

Document Number	Document Description	File Name	File Size(Bytes)/ Message Digest	Multi Part /.zip	Pages (if appl.)
1	Request for Corrected Filing Receipt	42090_REQ.pdf	194078 6d7813304098a3d47b5794bc7a3d83d2a4e76e92	no	2

Warnings:

Information:					
2	Application Data Sheet	42090_ADS.pdf	4750436 b7cf6d3bcf0caa1f6cd1e462cdd9ad8404851cfe	no	9
Warnings:					
Information:					
This is not an USPTO supplied ADS fillable form					
3	Power of Attorney	42090_POA.pdf	746064 2850ee3e2b3f228ef6e0c850af7c3b6280c22226	no	2
Warnings:					
Information:					
4	Assignee showing of ownership per 37 CFR 3.73	42090_373c.pdf	1930326 777b67977fc612d64f43bd0039237ec4b580dca0	no	3
Warnings:					
Information:					
			Total Files Size (in bytes):	7620904	

This Acknowledgement Receipt evidences receipt on the noted date by the USPTO of the indicated documents, characterized by the applicant, and including page counts, where applicable. It serves as evidence of receipt similar to a Post Card, as described in MPEP 503.

<u>New Applications Under 35 U.S.C. 111</u>
If a new application is being filed and the application includes the necessary components for a filing date (see 37 CFR 1.53(b)-(d) and MPEP 506), a Filing Receipt (37 CFR 1.54) will be issued in due course and the date shown on this Acknowledgement Receipt will establish the filing date of the application.
<u>National Stage of an International Application under 35 U.S.C. 371</u>
If a timely submission to enter the national stage of an international application is compliant with the conditions of 35 U.S.C. 371 and other applicable requirements a Form PCT/DO/EO/903 indicating acceptance of the application as a national stage submission under 35 U.S.C. 371 will be issued in addition to the Filing Receipt, in due course.
<u>New International Application Filed with the USPTO as a Receiving Office</u>
If a new international application is being filed and the international application includes the necessary components for an international filing date (see PCT Article 11 and MPEP 1810), a Notification of the International Application Number and of the International Filing Date (Form PCT/RO/105) will be issued in due course, subject to prescriptions concerning national security, and the date shown on this Acknowledgement Receipt will establish the international filing date of the application.

UNITED STATES PATENT AND TRADEMARK OFFICE

UNITED STATES DEPARTMENT OF COMMERCE
United States Patent and Trademark Office
Address: COMMISSIONER FOR PATENTS
P.O. Box 1450
Alexandria, Virginia 22313-1450
www.uspto.gov

APPLICATION NUMBER	FILING OR 371(C) DATE	FIRST NAMED APPLICANT	ATTY. DOCKET NO./TITLE
15/830,549	12/04/2017	Sam ANTHONY	2210871.00123US2

CONFIRMATION NO. 8998

POWER OF ATTORNEY NOTICE

23483
WILMERHALE/BOSTON
60 STATE STREET
BOSTON, MA 02109
UNITED STATES OF AMERICA

OC000000108601902

Date Mailed: 06/03/2019

NOTICE REGARDING CHANGE OF POWER OF ATTORNEY

This is in response to the Power of Attorney filed 05/30/2019.

- The Power of Attorney to you in this application has been revoked by the applicant. Future correspondence will be mailed to the new address of record(37 CFR 1.33).

Questions about the contents of this notice and the requirements it sets forth should be directed to the Office of Data Management, Application Assistance Unit, at **(571) 272-4000** or **(571) 272-4200** or **1-888-786-0101**.

/zabraha/

UNITED STATES PATENT AND TRADEMARK OFFICE

UNITED STATES DEPARTMENT OF COMMERCE
United States Patent and Trademark Office
Address: COMMISSIONER FOR PATENTS
P.O. Box 1450
Alexandria, Virginia 22313-1450
www.uspto.gov

APPLICATION NUMBER	FILING OR 371(C) DATE	FIRST NAMED APPLICANT	ATTY. DOCKET NO./TITLE
15/830,549	12/04/2017	Sam ANTHONY	2210871.00123US2

CONFIRMATION NO. 8998

POA ACCEPTANCE LETTER

758
FENWICK & WEST LLP
SILICON VALLEY CENTER
801 CALIFORNIA STREET
MOUNTAIN VIEW, CA 94041
UNITED STATES OF AMERICA

OC000000108601923

Date Mailed: 06/03/2019

NOTICE OF ACCEPTANCE OF POWER OF ATTORNEY

This is in response to the Power of Attorney filed 05/30/2019.

The Power of Attorney in this application is accepted. Correspondence in this application will be mailed to the above address as provided by 37 CFR 1.33.

Questions about the contents of this notice and the requirements it sets forth should be directed to the Office of Data Management, Application Assistance Unit, at **(571) 272-4000** or **(571) 272-4200** or **1-888-786-0101**.

/zabraha/

UNITED STATES PATENT AND TRADEMARK OFFICE

UNITED STATES DEPARTMENT OF COMMERCE
United States Patent and Trademark Office
Address: COMMISSIONER FOR PATENTS
P.O. Box 1450
Alexandria, Virginia 22313-1450
www.uspto.gov

APPLICATION NUMBER	FILING or 371(c) DATE	GRP ART UNIT	FIL FEE REC'D	ATTY.DOCKET.NO	TOT CLAIMS	IND CLAIMS
15/830,549	12/04/2017	2664	800	2210871.00123US2	20	2

CONFIRMATION NO. 8998

REPLACEMENT FILING RECEIPT

OC000000108601952

758
FENWICK & WEST LLP
SILICON VALLEY CENTER
801 CALIFORNIA STREET
MOUNTAIN VIEW, CA 94041
UNITED STATES OF AMERICA

Date Mailed: 06/03/2019

Receipt is acknowledged of this non-provisional utility patent application. The application will be taken up for examination in due course. Applicant will be notified as to the results of the examination. Any correspondence concerning the application must include the following identification information: the U.S. APPLICATION NUMBER, FILING DATE, NAME OF FIRST INVENTOR, and TITLE OF INVENTION. Fees transmitted by check or draft are subject to collection.

Please verify the accuracy of the data presented on this receipt. If an error is noted on this Filing Receipt, please submit a written request for a corrected Filing Receipt, including a properly marked-up ADS showing the changes with strike-through for deletions and underlining for additions. If you received a "Notice to File Missing Parts" or other Notice requiring a response for this application, please submit any request for correction to this Filing Receipt with your reply to the Notice. When the USPTO processes the reply to the Notice, the USPTO will generate another Filing Receipt incorporating the requested corrections provided that the request is grantable.

Inventor(s)

Sam ANTHONY, Cambridge, MA;
Sid MISRA, Cambridge, MA;
Avery FALLER, Cambridge, MA;

Applicant(s)

Perceptive Automata Inc., Cambridge, MA;

Power of Attorney: The patent practitioners associated with Customer Number 00758

Domestic Priority data as claimed by applicant

This appln claims benefit of 62/528,771 07/05/2017

Foreign Applications for which priority is claimed (You may be eligible to benefit from the **Patent Prosecution Highway** program at the USPTO. Please see http://www.uspto.gov for more information.) - None.
Foreign application information must be provided in an Application Data Sheet in order to constitute a claim to foreign priority. See 37 CFR 1.55 and 1.76.

Permission to Access Application via Priority Document Exchange: Yes

Permission to Access Search Results: Yes

Applicant may provide or rescind an authorization for access using Form PTO/SB/39 or Form PTO/SB/69 as appropriate.

If Required, Foreign Filing License Granted: 12/18/2017

The country code and number of your priority application, to be used for filing abroad under the Paris Convention, is **US 15/830,549**

Projected Publication Date: Not Applicable

Non-Publication Request: No

Early Publication Request: No
**** SMALL ENTITY ****
Title

SYSTEM AND METHOD OF PREDICTING HUMAN INTERACTION WITH VEHICLES

Preliminary Class

382

Statement under 37 CFR 1.55 or 1.78 for AIA (First Inventor to File) Transition Applications: No

PROTECTING YOUR INVENTION OUTSIDE THE UNITED STATES

Since the rights granted by a U.S. patent extend only throughout the territory of the United States and have no effect in a foreign country, an inventor who wishes patent protection in another country must apply for a patent in a specific country or in regional patent offices. Applicants may wish to consider the filing of an international application under the Patent Cooperation Treaty (PCT). An international (PCT) application generally has the same effect as a regular national patent application in each PCT-member country. The PCT process **simplifies** the filing of patent applications on the same invention in member countries, but **does not result** in a grant of "an international patent" and does not eliminate the need of applicants to file additional documents and fees in countries where patent protection is desired.

Almost every country has its own patent law, and a person desiring a patent in a particular country must make an application for patent in that country in accordance with its particular laws. Since the laws of many countries differ in various respects from the patent law of the United States, applicants are advised to seek guidance from specific foreign countries to ensure that patent rights are not lost prematurely.

Applicants also are advised that in the case of inventions made in the United States, the Director of the USPTO must issue a license before applicants can apply for a patent in a foreign country. The filing of a U.S. patent application serves as a request for a foreign filing license. The application's filing receipt contains further information and guidance as to the status of applicant's license for foreign filing.

Applicants may wish to consult the USPTO booklet, "General Information Concerning Patents" (specifically, the section entitled "Treaties and Foreign Patents") for more information on timeframes and deadlines for filing foreign patent applications. The guide is available either by contacting the USPTO Contact Center at 800-786-9199, or it can be viewed on the USPTO website at http://www.uspto.gov/web/offices/pac/doc/general/index.html.

For information on preventing theft of your intellectual property (patents, trademarks and copyrights), you may wish to consult the U.S. Government website, http://www.stopfakes.gov. Part of a Department of Commerce initiative, this website includes self-help "toolkits" giving innovators guidance on how to protect intellectual property in specific countries such as China, Korea and Mexico. For questions regarding patent enforcement issues, applicants may call the U.S. Government hotline at 1-866-999-HALT (1-866-999-4258).

LICENSE FOR FOREIGN FILING UNDER

Title 35, United States Code, Section 184

Title 37, Code of Federal Regulations, 5.11 & 5.15

GRANTED

The applicant has been granted a license under 35 U.S.C. 184, if the phrase "IF REQUIRED, FOREIGN FILING LICENSE GRANTED" followed by a date appears on this form. Such licenses are issued in all applications where the conditions for issuance of a license have been met, regardless of whether or not a license may be required as set forth in 37 CFR 5.15. The scope and limitations of this license are set forth in 37 CFR 5.15(a) unless an earlier license has been issued under 37 CFR 5.15(b). The license is subject to revocation upon written notification. The date indicated is the effective date of the license, unless an earlier license of similar scope has been granted under 37 CFR 5.13 or 5.14.

This license is to be retained by the licensee and may be used at any time on or after the effective date thereof unless it is revoked. This license is automatically transferred to any related applications(s) filed under 37 CFR 1.53(d). This license is not retroactive.

The grant of a license does not in any way lessen the responsibility of a licensee for the security of the subject matter as imposed by any Government contract or the provisions of existing laws relating to espionage and the national security or the export of technical data. Licensees should apprise themselves of current regulations especially with respect to certain countries, of other agencies, particularly the Office of Defense Trade Controls, Department of State (with respect to Arms, Munitions and Implements of War (22 CFR 121-128)); the Bureau of Industry and Security, Department of Commerce (15 CFR parts 730-774); the Office of Foreign AssetsControl, Department of Treasury (31 CFR Parts 500+) and the Department of Energy.

NOT GRANTED

No license under 35 U.S.C. 184 has been granted at this time, if the phrase "IF REQUIRED, FOREIGN FILING LICENSE GRANTED" DOES NOT appear on this form. Applicant may still petition for a license under 37 CFR 5.12, if a license is desired before the expiration of 6 months from the filing date of the application. If 6 months has lapsed from the filing date of this application and the licensee has not received any indication of a secrecy order under 35 U.S.C. 181, the licensee may foreign file the application pursuant to 37 CFR 5.15(b).

SelectUSA

The United States represents the largest, most dynamic marketplace in the world and is an unparalleled location for business investment, innovation, and commercialization of new technologies. The U.S. offers tremendous resources and advantages for those who invest and manufacture goods here. Through SelectUSA, our nation works to promote and facilitate business investment. SelectUSA provides information assistance to the international investor community; serves as an ombudsman for existing and potential investors; advocates on behalf of U.S. cities, states, and regions competing for global investment; and counsels U.S. economic development organizations on investment attraction best practices. To learn more about why the United States is the best country in the world to develop technology, manufacture products, deliver services, and grow your business, visit http://www.SelectUSA.gov or call +1-202-482-6800.

Doc Code: R48.REQ
Document Description: Request under Rule 48 correcting inventorship

PTO/AIA/40 (04-18)
Approved for use through 11/30/2020. OMB 0651-0031
U.S. Patent and Trademark Office, U.S. DEPARTMENT OF COMMERCE
Under the Paperwork Reduction Act of 1995, no persons are required to respond to a collection of information unless it displays a valid OMB control number.

REQUEST FOR CORRECTION IN A PATENT APPLICATION RELATING TO INVENTORSHIP OR AN INVENTOR NAME, OR ORDER OF NAMES, OTHER THAN IN A REISSUE APPLICATION (37 CFR 1.48)

Application Number	15/830,549
Filing Date	12-04-2017
First Named Inventor	Samuel English Anthony
Art Unit	2664
Examiner Name	BAKER, CHARLOTTE M
Practitioner Docket Number	35447-42090/US

To: Commissioner for Patents
P.O. Box 1450
Alexandria, VA 22313-1450

Applicant hereby **requests that the inventorship be corrected or changed, or that the name of the inventor or a joint inventor, or the order of the names of joint inventors, be changed,** in the above-identified application. **Note**: 37 CFR 1.48 applies to any request to correct inventorship filed on or after September 16, 2012, regardless of the application filing date. **Do not submit this form after payment of the issue fee or if the application has been patented.** See 37 CFR 1.324 for correction of inventorship in a patent.

Please check the applicable box(es) below.

For a nonprovisional application:

☐ 1. This request is to correct or change the inventorship in a **nonprovisional** application (**under 37 CFR 1.48(a)**) and includes:

☐ An application data sheet (ADS) in accordance with 37 CFR 1.76(c) with the corrected or updated information shown with markings (*e.g.*, underlining for insertions, strikethrough for deletions). See the Manual of Patent Examining Procedure (MPEP) section 601.05(a) for information about filing an ADS in an application filed on/after September 16, 2012. For information about filing a Supplemental ADS in an application filed before September 16, 2012, see MPEP 601.05(b).

☐ The processing fee set forth in 37 CFR 1.17(i). $ _____

☐ An inventor is being added. An inventor's oath or declaration by any actual inventor who has not yet executed an oath or declaration is required (see 37 CFR 1.48(b)). See MPEP 602.01(a) for information about an inventor's oath or declaration for an application filed on/after September 16, 2012 (*e.g.*, form **PTO/AIA/01**). For information about an inventor's oath or declaration for an application filed before September 16, 2012 (*e.g.*, form **PTO/SB/01**), see MPEP 602.01(b).

☒ This request is being filed after the first Office action on the merits has been given or mailed (see 37 CFR 1.48(c) and 1.17(d)). Check one of the following:

☐ This request to correct or change the inventorship is due solely to the cancellation of claims in the application.

OR

☒ The fee set forth in 37 CFR 1.17(d) is due (in addition to the fee set forth in 37 CFR 1.17(i)). $ 370

This collection of information is required by 37 CFR 1.48. The information is required to obtain or retain a benefit by the public which is to file (and by the USPTO to process) an application. Confidentiality is governed by 35 U.S.C. 122 and 37 CFR 1.11 and 1.14. This collection is estimated to take 1 hour to complete, including gathering, preparing, and submitting the completed application form to the USPTO. Time will vary depending upon the individual case. Any comments on the amount of time you require to complete this form and/or suggestions for reducing this burden, should be sent to the Chief Information Officer, U.S. Patent and Trademark Office, U.S. Department of Commerce, P.O. Box 1450, Alexandria, VA 22313-1450. DO NOT SEND FEES OR COMPLETED FORMS TO THIS ADDRESS. **SEND TO: Commissioner for Patents, P.O. Box 1450, Alexandria, VA 22313-1450.**

If you need assistance in completing the form, call 1-800-PTO-9199 and select option 2.

Under the Paperwork Reduction Act of 1995, no persons are required to respond to a collection of information unless it displays a valid OMB control number.

REQUEST FOR CORRECTION IN A PATENT APPLICATION RELATING TO INVENTORSHIP OR AN INVENTOR NAME, OR ORDER OF NAMES, OTHER THAN IN A REISSUE APPLICATION (37 CFR 1.48)

☐ 2. This request is to correct or update the name of the inventor or a joint inventor, or the order of names of joint inventors, in a **nonprovisional** application (**under 37 CFR 1.48(f)**) and includes:

☐ An application data sheet in accordance with 37 CFR 1.76(c) identifying the complete inventive entity, including the corrected or updated name of the inventor, or the new order of names shown with markings (*e.g.*, underlining for insertions, strikethrough for deletions). See the MPEP 601.05(a) for information about filing an ADS in an application filed on/after September 16, 2012. For information about filing a Supplemental ADS in an application filed before September 16, 2012, see MPEP 601.05(b).

☐ The processing fee set forth in 37 CFR 1.17(i). $ _____

For a provisional application:

☐ This request is to change or correct the inventorship, or correct or update the name of the inventor or a joint inventor, in a **provisional** application (**under 37 CFR 1.48(d)**) and includes:

☐ **Attached hereto** is a document that is signed by a party set forth in 37 CFR 1.33(b) and identifies each inventor by his or her legal name, in the preferred order. Note: the document may be an application data sheet in accordance with 37 CFR 1.76(c) that identifies the changes with markings (underlining for insertions, strikethrough for deletions).

☐ The processing fee set forth in 37 CFR 1.17(q). $ _____

Fee Payment Information:

☒ Applicant asserts small entity status. See 37 CFR 1.27.

☐ Applicant certifies micro entity status. See 37 CFR 1.29.
Form PTO/SB/15A or B or equivalent must either be enclosed or have been submitted previously

☐ A check in the amount of the fee is enclosed.

☐ Payment by credit card. Form PTO-2038 is attached.

☒ The Director is hereby authorized to charge any fees which may be required, or credit any overpayment to Deposit Account No. 192555.

☒ Payment made via EFS-Web.

WARNING: Information on this form may become public. Credit card information should not be included on this form. Provide credit card information and authorization on PTO-2038.

I am the

☐ Applicant* ☒ attorney or agent of record Registration number 63165 ☐ attorney or agent acting under 37 CFR 1.34 Registration number _____

Signature /Rajendra Panwar/

Typed or printed name Rajendra B. Panwar

Date June 17, 2019

NOTE: This form must be signed in accordance with 37 CFR 1.33. See 37 CFR 1.4 for signature requirements and certifications. *Juristic entities must be represented by a patent practitioner (See 37 CFR 1.31, applicable to any paper filed on or after September 16, 2012 that is presented on behalf of a juristic entity, regardless of application filing date). Submit multiple forms if more than one signature is required, see below**.

☐ ** Total of _____ forms are submitted.

Privacy Act Statement

The **Privacy Act of 1974 (P.L. 93-579)** requires that you be given certain information in connection with your submission of the attached form related to a patent application or patent. Accordingly, pursuant to the requirements of the Act, please be advised that: (1) the general authority for the collection of this information is 35 U.S.C. 2(b)(2); (2) furnishing of the information solicited is voluntary; and (3) the principal purpose for which the information is used by the U.S. Patent and Trademark Office is to process and/or examine your submission related to a patent application or patent. If you do not furnish the requested information, the U.S. Patent and Trademark Office may not be able to process and/or examine your submission, which may result in termination of proceedings or abandonment of the application or expiration of the patent.

The information provided by you in this form will be subject to the following routine uses:

1. The information on this form will be treated confidentially to the extent allowed under the Freedom of Information Act (5 U.S.C. 552) and the Privacy Act (5 U.S.C 552a). Records from this system of records may be disclosed to the Department of Justice to determine whether disclosure of these records is required by the Freedom of Information Act.
2. A record from this system of records may be disclosed, as a routine use, in the course of presenting evidence to a court, magistrate, or administrative tribunal, including disclosures to opposing counsel in the course of settlement negotiations.
3. A record in this system of records may be disclosed, as a routine use, to a Member of Congress submitting a request involving an individual, to whom the record pertains, when the individual has requested assistance from the Member with respect to the subject matter of the record.
4. A record in this system of records may be disclosed, as a routine use, to a contractor of the Agency having need for the information in order to perform a contract. Recipients of information shall be required to comply with the requirements of the Privacy Act of 1974, as amended, pursuant to 5 U.S.C. 552a(m).
5. A record related to an International Application filed under the Patent Cooperation Treaty in this system of records may be disclosed, as a routine use, to the International Bureau of the World Intellectual Property Organization, pursuant to the Patent Cooperation Treaty.
6. A record in this system of records may be disclosed, as a routine use, to another federal agency for purposes of National Security review (35 U.S.C. 181) and for review pursuant to the Atomic Energy Act (42 U.S.C. 218(c)).
7. A record from this system of records may be disclosed, as a routine use, to the Administrator, General Services, or his/her designee, during an inspection of records conducted by GSA as part of that agency's responsibility to recommend improvements in records management practices and programs, under authority of 44 U.S.C. 2904 and 2906. Such disclosure shall be made in accordance with the GSA regulations governing inspection of records for this purpose, and any other relevant (*i.e.*, GSA or Commerce) directive. Such disclosure shall not be used to make determinations about individuals.
8. A record from this system of records may be disclosed, as a routine use, to the public after either publication of the application pursuant to 35 U.S.C. 122(b) or issuance of a patent pursuant to 35 U.S.C. 151. Further, a record may be disclosed, subject to the limitations of 37 CFR 1.14, as a routine use, to the public if the record was filed in an application which became abandoned or in which the proceedings were terminated and which application is referenced by either a published application, an application open to public inspection or an issued patent.
9. A record from this system of records may be disclosed, as a routine use, to a Federal, State, or local law enforcement agency, if the USPTO becomes aware of a violation or potential violation of law or regulation.

CORRECTED ADS FORM

Application Number	15830549
Title of Invention	SYSTEM AND METHOD OF PREDICTING HUMAN INTERACTION WITH VEHICLES

Inventor Information

****If no data is shown, no data has been corrected****

	Data of Record	Updated Data
Order Number	1	
Name	~~Sam ANTHONY~~	Samuel English ANTHONY
Residence Information		
Residency	us-residency	
City	Cambridge	
State	MA	
Country of Residence	US	
Mailing Address of Inventor		
Address 1	10 Ware Street	
Address 2		
City,State/Province, Postal Code	Cambridge MA 02138	
Country	US	

	Data of Record	Updated Data
Order Number	2	
Name	~~Sid MISRA~~	Kshitij MISRA
Residence Information		
Residency	us-residency	
City	Cambridge	
State	MA	
Country of Residence	US	
Mailing Address of Inventor		
Address 1	10 Ware Street	
Address 2		
City,State/Province, Postal Code	Cambridge MA 02138	
Country	US	

	Data of Record	Updated Data
Order Number	3	
Name	~~Avery FALLER~~	Avery Wagner FALLER
Residence Information		
Residency	us-residency	
City	Cambridge	
State	MA	
Country of Residence	US	
Mailing Address of Inventor		
Address 1	10 Ware Street	
Address 2		
City,State/Province, Postal Code	Cambridge MA 02138	
Country	US	

Application Information

	Data of Record	Updated Data
Title of Invention	SYSTEM AND METHOD OF PREDICTING HUMAN INTERACTION WITH VEHICLES	
Attorney Docket Number	35447-42090/US	
Entity Type	Small	

Domestic Benefit/National Stage Information

****If no data is shown, no data has been corrected****

This section allows for the applicant to either claim benefit under 35 U.S.C. 119(e), 120, 121,365(c), or 386(c) or indicate National Stage entry from a PCT application. Providing this information in the application data sheet constitutes the specific reference required by 35 U.S. C. 119(e) or 120, and 37 CFR 1.78(a).

		Data of Record	Updated Data
	Prior Application Status		
	Application Number		
	Continuity Type		
	Prior Application Number		
	Filing Date (YYYY-MM-DD)		
	Patent Number		
	Issue Date (YYYY-MM-DD)		

Foreign Priority Information

****If no data is shown, no data has been corrected****

This section allows for the applicant to claim priority to a foreign application. Providing this information in the application data sheet constitutes the claim for priority as required by 35 U.S.C. 119(b) and 37 CFR 1.55. When priority is claimed to a foreign application that is eligible for retrieval under the priority document exchange program (PDX) the information will be used by the Office to automatically attempt retrieval pursuant to 37 CFR 1.55(i)(1) and (2). Under the PDX program, applicant bears the ultimate responsibility for ensuring that a copy of the foreign application is received by the Office from the participating foreign intellectual property office, or a certified copy of the foreign priority application is filed, within the time period specified in 37 CFR 1.55(g)(1).

		Data of Record	Updated Data
	Application Number		
	Country		
	Filing Date		
	Access Code		

Applicant Information

****If no data is shown, no data has been corrected****
Providing assignment information in this section does not substitute for compliance with any requirement of part 3 of Title 37 of CFR to have an assignment recorded by the Office.

	Data of Record	Updated Data
Applicant Type		

If applicant is the legal representative, indicate the authority to file the patent application, the inventor is		
Name of the Deceased or Legally Incapacitated Inventor		
Applicant is an Organization		
Name		
Organization Name		
Address 1		
Address 2		
City,State/Province,Postal Code		
Country		
Phone Number		
Fax Number		
Email Address		

Assignee Information including Non-Applicant Assignee Information

****If no data is shown, no data has been corrected****
Providing this information in the application data sheet does not substitute for compliance with any requirement of part 3 of Title 37 of the CFR to have an assignment recorded in the Office

	Data of Record	Updated Data
Order		
Applicant is an Organization		
Name		

Organization Name		
Mailing Address		
Address 1		
Address 2		
City,State/Province,Postal Code		
Country		
Phone Number		
Fax Number		
Email Address		

Signature

NOTE: This Application Data Sheet must be signed in accordance with 37 CFR 1.33(b).

This Application Data Sheet **must** be signed by a patent practitioner if one or more of the applicants is a **juristic entity** (e.g., corporation or association). If the applicant is two or more joint inventors, this form must be signed by a patent practitioner, **all** joint inventors who are the applicant, or one or more joint inventor-applicants who have been given power of attorney (e.g., see USPTO Form PTO/AIA/81) on behalf of **all** joint inventor-applicants.

See 37 CFR 1.4(d) for the manner of making signatures and certifications.

Signature	/Rajendra B. Panwar/	Registration Number	63165
First Name	Rajendra B	Last Name	Panwar

Electronic Patent Application Fee Transmittal

Application Number:	15830549
Filing Date:	04-Dec-2017
Title of Invention:	SYSTEM AND METHOD OF PREDICTING HUMAN INTERACTION WITH VEHICLES
First Named Inventor/Applicant Name:	
Filer:	Rajendra Bhagwatisingh Panwar
Attorney Docket Number:	35447-42090/US

Filed as Small Entity

Filing Fees for Utility under 35 USC 111(a)

Description	Fee Code	Quantity	Amount	Sub-Total in USD($)
Basic Filing:				
PROCESSING FEE, EXCEPT PROV. APPLS.	2830	1	70	70
CORRECTION OF INVENTORSHIP ON MERITS	2819	1	300	300
Pages:				
Claims:				
Miscellaneous-Filing:				
Petition:				
Patent-Appeals-and-Interference:				

Description	Fee Code	Quantity	Amount	Sub-Total in USD($)
Post-Allowance-and-Post-Issuance:				
Extension-of-Time:				
Miscellaneous:				
			Total in USD ($)	**370**

Electronic Acknowledgement Receipt

EFS ID:	36315225
Application Number:	15830549
International Application Number:	
Confirmation Number:	8998
Title of Invention:	SYSTEM AND METHOD OF PREDICTING HUMAN INTERACTION WITH VEHICLES
First Named Inventor/Applicant Name:	
Customer Number:	758
Filer:	Rajendra Bhagwatisingh Panwar
Filer Authorized By:	
Attorney Docket Number:	35447-42090/US
Receipt Date:	17-JUN-2019
Filing Date:	04-DEC-2017
Time Stamp:	18:29:09
Application Type:	Utility under 35 USC 111(a)

Payment information:

Submitted with Payment	yes
Payment Type	DA
Payment was successfully received in RAM	$370
RAM confirmation Number	061819INTEFSW00005383192555
Deposit Account	192555
Authorized User	Rajendra Panwar

The Director of the USPTO is hereby authorized to charge indicated fees and credit any overpayment as follows:

37 CFR 1.16 (National application filing, search, and examination fees)

37 CFR 1.17 (Patent application and reexamination processing fees)

37 CFR 1.19 (Document supply fees)

37 CFR 1.20 (Post Issuance fees)

37 CFR 1.21 (Miscellaneous fees and charges)

File Listing:

Document Number	Document Description	File Name	File Size(Bytes)/ Message Digest	Multi Part /.zip	Pages (if appl.)
1	Request under Rule 48 correcting inventorship	42090_REQ_INV.pdf	173604 44fa61803606ed33545a850e95d213d7932fcf87	no	3
Warnings:					
Information:					
2	Application Data Sheet to update/ correct info	CorrectedADS.pdf	81412 88000801c3528fb4ba353ec677ad16d738bb5bea	no	6
Warnings:					
Information:					
3	Fee Worksheet (SB06)	fee-info.pdf	32146 fd72d57639322d603c1c8c32830c8eb10dae1933	no	2
Warnings:					
Information:					
			Total Files Size (in bytes):	287162	

This Acknowledgement Receipt evidences receipt on the noted date by the USPTO of the indicated documents, characterized by the applicant, and including page counts, where applicable. It serves as evidence of receipt similar to a Post Card, as described in MPEP 503.

<u>New Applications Under 35 U.S.C. 111</u>
If a new application is being filed and the application includes the necessary components for a filing date (see 37 CFR 1.53(b)-(d) and MPEP 506), a Filing Receipt (37 CFR 1.54) will be issued in due course and the date shown on this Acknowledgement Receipt will establish the filing date of the application.
<u>National Stage of an International Application under 35 U.S.C. 371</u>
If a timely submission to enter the national stage of an international application is compliant with the conditions of 35 U.S.C. 371 and other applicable requirements a Form PCT/DO/EO/903 indicating acceptance of the application as a national stage submission under 35 U.S.C. 371 will be issued in addition to the Filing Receipt, in due course.
<u>New International Application Filed with the USPTO as a Receiving Office</u>
If a new international application is being filed and the international application includes the necessary components for an international filing date (see PCT Article 11 and MPEP 1810), a Notification of the International Application Number and of the International Filing Date (Form PCT/RO/105) will be issued in due course, subject to prescriptions concerning national security, and the date shown on this Acknowledgement Receipt will establish the international filing date of the application.

UNITED STATES PATENT AND TRADEMARK OFFICE

UNITED STATES DEPARTMENT OF COMMERCE
United States Patent and Trademark Office
Address: COMMISSIONER FOR PATENTS
P.O. Box 1450
Alexandria, Virginia 22313-1450
www.uspto.gov

APPLICATION NUMBER	FILING or 371(c) DATE	GRP ART UNIT	FIL FEE REC'D	ATTY.DOCKET.NO	TOT CLAIMS	IND CLAIMS
15/830,549	12/04/2017	2664	800	35447-42090/US	20	2

CONFIRMATION NO. 8998

UPDATED FILING RECEIPT

OC000000109007568

758
FENWICK & WEST LLP
SILICON VALLEY CENTER
801 CALIFORNIA STREET
MOUNTAIN VIEW, CA 94041
UNITED STATES OF AMERICA

Date Mailed: 06/19/2019

Receipt is acknowledged of this non-provisional utility patent application. The application will be taken up for examination in due course. Applicant will be notified as to the results of the examination. Any correspondence concerning the application must include the following identification information: the U.S. APPLICATION NUMBER, FILING DATE, NAME OF FIRST INVENTOR, and TITLE OF INVENTION. Fees transmitted by check or draft are subject to collection.

Please verify the accuracy of the data presented on this receipt. If an error is noted on this Filing Receipt, please submit a written request for a corrected Filing Receipt, including a properly marked-up ADS showing the changes with strike-through for deletions and underlining for additions. If you received a "Notice to File Missing Parts" or other Notice requiring a response for this application, please submit any request for correction to this Filing Receipt with your reply to the Notice. When the USPTO processes the reply to the Notice, the USPTO will generate another Filing Receipt incorporating the requested corrections provided that the request is grantable.

Inventor(s)

Samuel English ANTHONY, Cambridge, MA;
Kshitij MISRA, Cambridge, MA;
Avery Wagner FALLER, Cambridge, MA;

Applicant(s)

Perceptive Automata Inc., Cambridge, MA;

Power of Attorney: The patent practitioners associated with Customer Number 00758

Domestic Priority data as claimed by applicant

This appln claims benefit of 62/528,771 07/05/2017

Foreign Applications for which priority is claimed (You may be eligible to benefit from the **Patent Prosecution Highway** program at the USPTO. Please see http://www.uspto.gov for more information.) - None.
Foreign application information must be provided in an Application Data Sheet in order to constitute a claim to foreign priority. See 37 CFR 1.55 and 1.76.

Permission to Access Application via Priority Document Exchange: Yes

Permission to Access Search Results: Yes

Applicant may provide or rescind an authorization for access using Form PTO/SB/39 or Form PTO/SB/69 as appropriate.

Projected Publication Date: Not Applicable

Non-Publication Request: No

Early Publication Request: No
**** SMALL ENTITY ****
Title

SYSTEM AND METHOD OF PREDICTING HUMAN INTERACTION WITH VEHICLES

Preliminary Class

382

Statement under 37 CFR 1.55 or 1.78 for AIA (First Inventor to File) Transition Applications: No

PROTECTING YOUR INVENTION OUTSIDE THE UNITED STATES

Since the rights granted by a U.S. patent extend only throughout the territory of the United States and have no effect in a foreign country, an inventor who wishes patent protection in another country must apply for a patent in a specific country or in regional patent offices. Applicants may wish to consider the filing of an international application under the Patent Cooperation Treaty (PCT). An international (PCT) application generally has the same effect as a regular national patent application in each PCT-member country. The PCT process **simplifies** the filing of patent applications on the same invention in member countries, but **does not result** in a grant of "an international patent" and does not eliminate the need of applicants to file additional documents and fees in countries where patent protection is desired.

Almost every country has its own patent law, and a person desiring a patent in a particular country must make an application for patent in that country in accordance with its particular laws. Since the laws of many countries differ in various respects from the patent law of the United States, applicants are advised to seek guidance from specific foreign countries to ensure that patent rights are not lost prematurely.

Applicants also are advised that in the case of inventions made in the United States, the Director of the USPTO must issue a license before applicants can apply for a patent in a foreign country. The filing of a U.S. patent application serves as a request for a foreign filing license. The application's filing receipt contains further information and guidance as to the status of applicant's license for foreign filing.

Applicants may wish to consult the USPTO booklet, "General Information Concerning Patents" (specifically, the section entitled "Treaties and Foreign Patents") for more information on timeframes and deadlines for filing foreign patent applications. The guide is available either by contacting the USPTO Contact Center at 800-786-9199, or it can be viewed on the USPTO website at http://www.uspto.gov/web/offices/pac/doc/general/index.html.

For information on preventing theft of your intellectual property (patents, trademarks and copyrights), you may wish to consult the U.S. Government website, http://www.stopfakes.gov. Part of a Department of Commerce initiative, this website includes self-help "toolkits" giving innovators guidance on how to protect intellectual property in specific countries such as China, Korea and Mexico. For questions regarding patent enforcement issues, applicants may call the U.S. Government hotline at 1-866-999-HALT (1-866-999-4258).

LICENSE FOR FOREIGN FILING UNDER

Title 35, United States Code, Section 184

Title 37, Code of Federal Regulations, 5.11 & 5.15

GRANTED

The applicant has been granted a license under 35 U.S.C. 184, if the phrase "IF REQUIRED, FOREIGN FILING LICENSE GRANTED" followed by a date appears on this form. Such licenses are issued in all applications where the conditions for issuance of a license have been met, regardless of whether or not a license may be required as set forth in 37 CFR 5.15. The scope and limitations of this license are set forth in 37 CFR 5.15(a) unless an earlier license has been issued under 37 CFR 5.15(b). The license is subject to revocation upon written notification. The date indicated is the effective date of the license, unless an earlier license of similar scope has been granted under 37 CFR 5.13 or 5.14.

This license is to be retained by the licensee and may be used at any time on or after the effective date thereof unless it is revoked. This license is automatically transferred to any related applications(s) filed under 37 CFR 1.53(d). This license is not retroactive.

The grant of a license does not in any way lessen the responsibility of a licensee for the security of the subject matter as imposed by any Government contract or the provisions of existing laws relating to espionage and the national security or the export of technical data. Licensees should apprise themselves of current regulations especially with respect to certain countries, of other agencies, particularly the Office of Defense Trade Controls, Department of State (with respect to Arms, Munitions and Implements of War (22 CFR 121-128)); the Bureau of Industry and Security, Department of Commerce (15 CFR parts 730-774); the Office of Foreign AssetsControl, Department of Treasury (31 CFR Parts 500+) and the Department of Energy.

NOT GRANTED

No license under 35 U.S.C. 184 has been granted at this time, if the phrase "IF REQUIRED, FOREIGN FILING LICENSE GRANTED" DOES NOT appear on this form. Applicant may still petition for a license under 37 CFR 5.12, if a license is desired before the expiration of 6 months from the filing date of the application. If 6 months has lapsed from the filing date of this application and the licensee has not received any indication of a secrecy order under 35 U.S.C. 181, the licensee may foreign file the application pursuant to 37 CFR 5.15(b).

SelectUSA

The United States represents the largest, most dynamic marketplace in the world and is an unparalleled location for business investment, innovation, and commercialization of new technologies. The U.S. offers tremendous resources and advantages for those who invest and manufacture goods here. Through SelectUSA, our nation works to promote and facilitate business investment. SelectUSA provides information assistance to the international investor community; serves as an ombudsman for existing and potential investors; advocates on behalf of U.S. cities, states, and regions competing for global investment; and counsels U.S. economic development organizations on investment attraction best practices. To learn more about why the United States is the best country in the world to develop technology, manufacture products, deliver services, and grow your business, visit http://www.SelectUSA.gov or call +1-202-482-6800.

UNITED STATES PATENT AND TRADEMARK OFFICE

UNITED STATES DEPARTMENT OF COMMERCE
United States Patent and Trademark Office
Address: COMMISSIONER FOR PATENTS
P.O. Box 1450
Alexandria, Virginia 22313-1450
www.uspto.gov

APPLICATION NUMBER	FILING OR 371(C) DATE	FIRST NAMED APPLICANT	ATTY. DOCKET NO./TITLE
15/830,549	12/04/2017	Samuel English ANTHONY	35447-42090/US

CONFIRMATION NO. 8998

758
FENWICK & WEST LLP
SILICON VALLEY CENTER
801 CALIFORNIA STREET
MOUNTAIN VIEW, CA 94041
UNITED STATES OF AMERICA

37 CFR 1.48(f)
ACKNOWLEDGEMENT LETTER

OC000000109007570

Date Mailed: 06/19/2019

NOTICE OF ACCEPTANCE OF REQUEST UNDER 37 CFR 1.48(f)

This is in response to the applicant's request under 37 CFR 1.48(f) submitted on 06/17/2019.

The request under 37 CFR 1.48(f) to correct the inventorship, to correct or update the name of an inventor, or to correct the order of names of joint inventors is accepted.

Questions about the contents of this notice and the requirements it sets forth should be directed to the Office of Data Management, Application Assistance Unit, at **(571) 272-4000** or **(571) 272-4200** or **1-888-786-0101**.

/hsarwari/

PART B - FEE(S) TRANSMITTAL

Complete and send this form, together with applicable fee(s), by mail or fax, or via EFS-Web.

By mail, send to: Mail Stop ISSUE FEE
Commissioner for Patents
P.O. Box 1450
Alexandria, Virginia 22313-1450

By fax, send to: (571)-273-2885

INSTRUCTIONS: This form should be used for transmitting the ISSUE FEE and PUBLICATION FEE (if required). Blocks 1 through 5 should be completed where appropriate. All further correspondence including the Patent, advance orders and notification of maintenance fees will be mailed to the current correspondence address as indicated unless corrected below or directed otherwise in Block 1, by (a) specifying a new correspondence address; and/or (b) indicating a separate "FEE ADDRESS" for maintenance fee notifications.

CURRENT CORRESPONDENCE ADDRESS (Note: Use Block 1 for any change of address)

23483 7590 04/29/2019

~~WILMERHALE/BOSTON~~
~~60 STATE STREET~~
~~BOSTON, MA 02109~~

FENWICK & WEST LLP
SILICON VALLEY CENTER
801 CALIFORNIA STREET
MOUNTAIN VIEW, CA 94041

Note: A certificate of mailing can only be used for domestic mailings of the Fee(s) Transmittal. This certificate cannot be used for any other accompanying papers. Each additional paper, such as an assignment or formal drawing, must have its own certificate of mailing or transmission.

Certificate of Mailing or Transmission

I hereby certify that this Fee(s) Transmittal is being deposited with the United States Postal Service with sufficient postage for first class mail in an envelope addressed to the Mail Stop ISSUE FEE address above, or being transmitted to the USPTO via EFS-Web or by facsimile to (571) 273-2885, on the date below.

(Typed or printed name)

(Signature)

(Date)

APPLICATION NO.	FILING DATE	FIRST NAMED INVENTOR	ATTORNEY DOCKET NO.	CONFIRMATION NO.
15/830,549	12/04/2017	Sam ANTHONY	2210871.00123US2	8998

TITLE OF INVENTION: SYSTEM AND METHOD OF PREDICTING HUMAN INTERACTION WITH VEHICLES

APPLN. TYPE	ENTITY STATUS	ISSUE FEE DUE	PUBLICATION FEE DUE	PREV. PAID ISSUE FEE	TOTAL FEE(S) DUE	DATE DUE
nonprovisional	SMALL	$500	$0.00	$0.00	$500	07/29/2019

EXAMINER	ART UNIT	CLASS-SUBCLASS
BAKER, CHARLOTTE M	2664	382-104000

1. Change of correspondence address or indication of "Fee Address" (37 CFR 1.363).

☐ Change of correspondence address (or Change of Correspondence Address form PTO/SB/122) attached.

☐ "Fee Address" indication (or "Fee Address" Indication form PTO/SB/47; Rev 03-09 or more recent) attached. **Use of a Customer Number is required.**

2. For printing on the patent front page, list
(1) The names of up to 3 registered patent attorneys or agents OR, alternatively,
(2) The name of a single firm (having as a member a registered attorney or agent) and the names of up to 2 registered patent attorneys or agents. If no name is listed, no name will be printed.

1 Fenwick & West LLP
2
3

3. ASSIGNEE NAME AND RESIDENCE DATA TO BE PRINTED ON THE PATENT (print or type)

PLEASE NOTE: Unless an assignee is identified below, no assignee data will appear on the patent. If an assignee is identified below, the document must have been previously recorded, or filed for recordation, as set forth in 37 CFR 3.11 and 37 CFR 3.81(a). Completion of this form is NOT a substitute for filing an assignment.

(A) NAME OF ASSIGNEE: Perceptive Automata, Inc.

(B) RESIDENCE: (CITY and STATE OR COUNTRY): Cambridge, MA

Please check the appropriate assignee category or categories (will not be printed on the patent) : ☐ Individual ☒ Corporation or other private group entity ☐ Government

4a. Fees submitted: ☒ Issue Fee ☐ Publication Fee (if required) ☐ Advance Order - # of Copies _____

4b. Method of Payment: *(Please first reapply any previously paid fee shown above)*

☒ Electronic Payment via EFS-Web ☐ Enclosed check ☐ Non-electronic payment by credit card (Attach form PTO-2038)

☒ The Director is hereby authorized to charge the required fee(s), any deficiency, or credit any overpayment to Deposit Account No. 192555

5. **Change in Entity Status** (from status indicated above)

☐ Applicant certifying micro entity status. See 37 CFR 1.29

☐ Applicant asserting small entity status. See 37 CFR 1.27

☐ Applicant changing to regular undiscounted fee status.

NOTE: Absent a valid certification of Micro Entity Status (see forms PTO/SB/15A and 15B), issue fee payment in the micro entity amount will not be accepted at the risk of application abandonment.
NOTE: If the application was previously under micro entity status, checking this box will be taken to be a notification of loss of entitlement to micro entity status.
NOTE: Checking this box will be taken to be a notification of loss of entitlement to small or micro entity status, as applicable.

NOTE: This form must be signed in accordance with 37 CFR 1.31 and 1.33. See 37 CFR 1.4 for signature requirements and certifications.

Authorized Signature /Rajendra Panwar/ Date July 15, 2019

Typed or printed name Rajendra B. Panwar Registration No. 63,165

Electronic Patent Application Fee Transmittal

Application Number:	15830549
Filing Date:	04-Dec-2017
Title of Invention:	SYSTEM AND METHOD OF PREDICTING HUMAN INTERACTION WITH VEHICLES
First Named Inventor/Applicant Name:	Samuel English ANTHONY
Filer:	Rajendra Bhagwatisingh Panwar/Natasha Pasciucco
Attorney Docket Number:	35447-42090/US

Filed as Small Entity

Filing Fees for Utility under 35 USC 111(a)

Description	Fee Code	Quantity	Amount	Sub-Total in USD($)
Basic Filing:				
Pages:				
Claims:				
Miscellaneous-Filing:				
Petition:				
Patent-Appeals-and-Interference:				
Post-Allowance-and-Post-Issuance:				
UTILITY APPL ISSUE FEE	2501	1	500	500

Description	Fee Code	Quantity	Amount	Sub-Total in USD($)
Extension-of-Time:				
Miscellaneous:				
			Total in USD ($)	**500**

Electronic Acknowledgement Receipt

EFS ID:	36578985
Application Number:	15830549
International Application Number:	
Confirmation Number:	8998
Title of Invention:	SYSTEM AND METHOD OF PREDICTING HUMAN INTERACTION WITH VEHICLES
First Named Inventor/Applicant Name:	Samuel English ANTHONY
Customer Number:	758
Filer:	Rajendra Bhagwatisingh Panwar
Filer Authorized By:	
Attorney Docket Number:	35447-42090/US
Receipt Date:	16-JUL-2019
Filing Date:	04-DEC-2017
Time Stamp:	11:41:41
Application Type:	Utility under 35 USC 111(a)

Payment information:

Submitted with Payment	yes
Payment Type	DA
Payment was successfully received in RAM	$500
RAM confirmation Number	071619INTEFSW00011061192555
Deposit Account	192555
Authorized User	Rajendra Panwar

The Director of the USPTO is hereby authorized to charge indicated fees and credit any overpayment as follows:

37 CFR 1.16 (National application filing, search, and examination fees)

37 CFR 1.17 (Patent application and reexamination processing fees)

37 CFR 1.19 (Document supply fees)

37 CFR 1.20 (Post Issuance fees)

37 CFR 1.21 (Miscellaneous fees and charges)

File Listing:

Document Number	Document Description	File Name	File Size(Bytes)/ Message Digest	Multi Part /.zip	Pages (if appl.)
1	Issue Fee Payment (PTO-85B)	42090_if.pdf	185499 678aeb0021f44d45f93bfc92c48f9681ad463532	no	1
Warnings:					
Information:					
2	Fee Worksheet (SB06)	fee-info.pdf	30631 b645c92a0aaed0d86689ce06bf419245e1488051	no	2
Warnings:					
Information:					
		Total Files Size (in bytes):	216130		

This Acknowledgement Receipt evidences receipt on the noted date by the USPTO of the indicated documents, characterized by the applicant, and including page counts, where applicable. It serves as evidence of receipt similar to a Post Card, as described in MPEP 503.

<u>New Applications Under 35 U.S.C. 111</u>
If a new application is being filed and the application includes the necessary components for a filing date (see 37 CFR 1.53(b)-(d) and MPEP 506), a Filing Receipt (37 CFR 1.54) will be issued in due course and the date shown on this Acknowledgement Receipt will establish the filing date of the application.
<u>National Stage of an International Application under 35 U.S.C. 371</u>
If a timely submission to enter the national stage of an international application is compliant with the conditions of 35 U.S.C. 371 and other applicable requirements a Form PCT/DO/EO/903 indicating acceptance of the application as a national stage submission under 35 U.S.C. 371 will be issued in addition to the Filing Receipt, in due course.
<u>New International Application Filed with the USPTO as a Receiving Office</u>
If a new international application is being filed and the international application includes the necessary components for an international filing date (see PCT Article 11 and MPEP 1810), a Notification of the International Application Number and of the International Filing Date (Form PCT/RO/105) will be issued in due course, subject to prescriptions concerning national security, and the date shown on this Acknowledgement Receipt will establish the international filing date of the application.

INFORMATION DISCLOSURE STATEMENT BY APPLICANT
(Not for submission under 37 CFR 1.99)

	Complete if Known
Application Number	15/830,549
Filing Date	December 4, 2017
First Named Inventor	Sam ANTHONY
Applicant	Perceptive Automata
Art Unit	2664
Confirmation Number	8998
Examiner Name	Charlotte M. Baker
Attorney Docket Number	35447-42090/US

Sheet 1 of 3

U.S. PATENT DOCUMENTS

Examiner Initials*	Cite No.[1]	Document No. Number – Kind Code[2] (if known)	Publication Date MM-DD-YYYY	Name of Patentee or Applicant of Cited Document
	A1	US 2017/0270374 A1	09-21-2017	~~Ford Global Technologies, LLC~~ Myers, et al.
	A2	US 2017/0153639 A1	06-01-2017	~~MOBILEYE VISION TECHNOLOGIES LTD.~~ Stein
	A3	US 2015/0213555 A1	07-30-2015	~~HTI IP, LLC~~ Barfield, Jr., et al.

Change(s) applied to document, /K.P./ 6/19/2019

FOREIGN PATENT DOCUMENTS

Examiner Initials*	Cite No.[1]	Foreign Patent Document Country Code[3] – Number[4] Kind Code[5] (if known)	Publication Date MM-DD-YYYY	Name of Patentee or Applicant of Cited Document	T[6]
	B1				

OTHER REFERENCES – NON-PATENT LITERATURE DOCUMENTS

Examiner Initials*	Cite No.[1]	Include name of the author (in CAPITAL LETTERS), title of the article (when appropriate), title of the item (book, magazine, journal, serial, symposium, catalog, etc.), date, page(s), volume-issue number(s), publisher, city and/or country where published	T[6]
	C1	International Search Report and Written Opinion, PCT Application No. PCT/US2018/063459, February 7, 2019, 13 pages.	
	C2	GIRDHAR, R. and RAMANAN, D., "Attentional Pooling for Action Recognition," 31st Conference on Neural Information Processing Systems (NIPS 2017), 12 pages.	
	C3	HE, K., et al. "Mask R-CNN," Computer Vision and Pattern Recognition 1703.06870v3, January 24, 2018, 12 pages.	
	C4	KARMARKAR, T., "Regional Proposal network (RPN)- Backbone of Faster R-CNN," August 18, 2018, 6 pages, [Online][Retrieved January 5, 2019], Retrieved from the internet <URL:https://medium.com/@tanaykarmarkar/region-proposal-network-rpn-bac>.	
	C5	KOTSERUBA, I., et al., "Joint Attention in Autonomous Driving (JADD),' Robotics 1609.04741v5, April 24, 2017, 10 pages.	
	C6	NEWELL, A., et al., "Stacked Hourglass Networks for Human Pose Estimation," Computer Vision and Pattern Recognition 1603.06937v2, July 26, 2016, 17 pages.	

EXAMINER SIGNATURE

Examiner Signature	/CHARLOTTE M BAKER/
Date Considered	04/24/2019

*EXAMINER: Initial if reference considered, whether or not citation is in conformance with MPEP 609. Draw line through a citation if not in conformance and not considered. Include copy of this form with next communication to applicant.

[1] Applicant's unique citation designation number (option). [2] See Kind Codes of USPTO Patent Documents at www.USPTO.GOV or MPEP 901.04. [3] Enter office that issued the document, by the two-letter code (WIPO Standard ST.3). [4] For Japanese patent documents, the indication of the year of the reign of the Emperor must precede the serial number of the patent document.

[5] Kind of document by the appropriate symbols as indicated on the document under WIPO Standard ST.16 if possible. [6] Applicant is to place a check mark here if English language translation is attached.

ALL REFERENCES CONSIDERED EXCEPT WHERE LINED THROUGH. /C.M.B./

UNITED STATES PATENT AND TRADEMARK OFFICE

UNITED STATES DEPARTMENT OF COMMERCE
United States Patent and Trademark Office
Address: COMMISSIONER FOR PATENTS
P.O. Box 1450
Alexandria, Virginia 22313-1450
www.uspto.gov

APPLICATION NO.	ISSUE DATE	PATENT NO.	ATTORNEY DOCKET NO.	CONFIRMATION NO.
15/830,549	09/03/2019	10402687	35447-42090/US	8998

758 7590 08/14/2019

FENWICK & WEST LLP
SILICON VALLEY CENTER
801 CALIFORNIA STREET
MOUNTAIN VIEW, CA 94041

ISSUE NOTIFICATION

The projected patent number and issue date are specified above.

Determination of Patent Term Adjustment under 35 U.S.C. 154 (b)
(application filed on or after May 29, 2000)

The Patent Term Adjustment is 0 day(s). Any patent to issue from the above-identified application will include an indication of the adjustment on the front page.

If a Continued Prosecution Application (CPA) was filed in the above-identified application, the filing date that determines Patent Term Adjustment is the filing date of the most recent CPA.

Applicant will be able to obtain more detailed information by accessing the Patent Application Information Retrieval (PAIR) WEB site (http://pair.uspto.gov).

Any questions regarding the Patent Term Extension or Adjustment determination should be directed to the Office of Patent Legal Administration at (571)-272-7702. Questions relating to issue and publication fee payments should be directed to the Application Assistance Unit (AAU) of the Office of Data Management (ODM) at (571)-272-4200.

APPLICANT(s) (Please see PAIR WEB site http://pair.uspto.gov for additional applicants):

Samuel English ANTHONY, Cambridge, MA;
Perceptive Automata Inc., Cambridge, MA;
Kshitij MISRA, Cambridge, MA;
Avery Wagner FALLER, Cambridge, MA;

The United States represents the largest, most dynamic marketplace in the world and is an unparalleled location for business investment, innovation, and commercialization of new technologies. The USA offers tremendous resources and advantages for those who invest and manufacture goods here. Through SelectUSA, our nation works to encourage and facilitate business investment. To learn more about why the USA is the best country in the world to develop technology, manufacture products, and grow your business, visit SelectUSA.gov.