Doc Code: ECOMM.AUTH/ECOMM.WTDW
Doc Description: Internet Communications Authorized/Internet Communications Authorization Withdrawn

PTO/SB/439 (11-15)

AUTHORIZATION FOR INTERNET COMMUNICATIONS IN A PATENT APPLICATION OR REQUEST TO WITHDRAW AUTHORIZATION FOR INTERNET COMMUNICATIONS		
	Application No.	Not yet assigned
	Filing Date	Herewith
	First Named Inventor	Samuel English Anthony
	Art Unit	Not yet assigned
	Examiner Name	Not yet assigned
	Practitioner Docket No.	35447-43490/US

To: Commissioner for Patents
P.O. Box 1450
Alexandria, VA 22313-1450

I. To authorize permission for Internet Communications.

☑ Recognizing that Internet communications are not secure, I hereby authorize the USPTO to communicate with the undersigned and practitioners in accordance with 37 CFR 1.33 and 37 CFR 1.34 concerning any subject matter of this application via video conferencing, instant messaging, or electronic mail. I understand that a copy of these communications will be made of record in the application file. (MPEP 502.03)

II. To withdraw authorization for Internet Communications.

☐ The authorization given on _____, to the USPTO to communicate with the undersigned and any practitioner in accordance with 37 CFR 1.33 and 37 CFR 1.34 concerning any subject matter of this application via Internet communications such as video conferencing, instant messaging, or electronic mail is hereby withdrawn. I understand that the withdrawal is effective when approved rather than when received.

I am the

☐ applicant.

☑ attorney or agent of record. Registration number 63,165.

☐ attorney or agent acting under 37 CFR 1.34. Registration number _____.

/Rajendra B. Panwar/
Signature

July 15, 2019
Date

Rajendra B. Panwar
Typed or printed name

650-335-7107
Telephone Number

NOTE: This form must be signed in accordance with 37 CFR 1.33. See 37 CFR 1.4 for signature requirements and certifications. Juristic entities must be represented by a patent practitioner (see 37 CFR 1.31, which is applicable to any paper filed on or after September 16, 2012, that is presented on behalf of a juristic entity, regardless of application filing date). Submit multiple forms if more than one signature is required, see below*.

☑ * Total of 1 forms are submitted.

Privacy Act Statement

The **Privacy Act of 1974 (P.L. 93-579)** requires that you be given certain information in connection with your submission of the attached form related to a patent application or patent. Accordingly, pursuant to the requirements of the Act, please be advised that: (1) the general authority for the collection of this information is 35 U.S.C. 2(b)(2); (2) furnishing of the information solicited is voluntary; and (3) the principal purpose for which the information is used by the U.S. Patent and Trademark Office is to process and/or examine your submission related to a patent application or patent. If you do not furnish the requested information, the U.S. Patent and Trademark Office may not be able to process and/or examine your submission, which may result in termination of proceedings or abandonment of the application or expiration of the patent.

The information provided by you in this form will be subject to the following routine uses:

1. The information on this form will be treated confidentially to the extent allowed under the Freedom of Information Act (5 U.S.C. 552) and the Privacy Act (5 U.S.C 552a). Records from this system of records may be disclosed to the Department of Justice to determine whether disclosure of these records is required by the Freedom of Information Act.
2. A record from this system of records may be disclosed, as a routine use, in the course of presenting evidence to a court, magistrate, or administrative tribunal, including disclosures to opposing counsel in the course of settlement negotiations.
3. A record in this system of records may be disclosed, as a routine use, to a Member of Congress submitting a request involving an individual, to whom the record pertains, when the individual has requested assistance from the Member with respect to the subject matter of the record.
4. A record in this system of records may be disclosed, as a routine use, to a contractor of the Agency having need for the information in order to perform a contract. Recipients of information shall be required to comply with the requirements of the Privacy Act of 1974, as amended, pursuant to 5 U.S.C. 552a(m).
5. A record related to an International Application filed under the Patent Cooperation Treaty in this system of records may be disclosed, as a routine use, to the International Bureau of the World Intellectual Property Organization, pursuant to the Patent Cooperation Treaty.
6. A record in this system of records may be disclosed, as a routine use, to another federal agency for purposes of National Security review (35 U.S.C. 181) and for review pursuant to the Atomic Energy Act (42 U.S.C. 218(c)).
7. A record from this system of records may be disclosed, as a routine use, to the Administrator, General Services, or his/her designee, during an inspection of records conducted by GSA as part of that agency's responsibility to recommend improvements in records management practices and programs, under authority of 44 U.S.C. 2904 and 2906. Such disclosure shall be made in accordance with the GSA regulations governing inspection of records for this purpose, and any other relevant (*i.e.*, GSA or Commerce) directive. Such disclosure shall not be used to make determinations about individuals.
8. A record from this system of records may be disclosed, as a routine use, to the public after either publication of the application pursuant to 35 U.S.C. 122(b) or issuance of a patent pursuant to 35 U.S.C. 151. Further, a record may be disclosed, subject to the limitations of 37 CFR 1.14, as a routine use, to the public if the record was filed in an application which became abandoned or in which the proceedings were terminated and which application is referenced by either a published application, an application open to public inspection or an issued patent.
9. A record from this system of records may be disclosed, as a routine use, to a Federal, State, or local law enforcement agency, if the USPTO becomes aware of a violation or potential violation of law or regulation.

PTO/AIA/82A (07-13)
Approved for use through 01/31/2018. OMB 0651-0035
U.S. Patent and Trademark Office; U.S. DEPARTMENT OF COMMERCE
Under the Paperwork Reduction Act of 1995, no persons are required to respond to a collection of information unless it displays a valid OMB control number.

TRANSMITTAL FOR POWER OF ATTORNEY TO ONE OR MORE REGISTERED PRACTITIONERS

NOTE: This form is to be submitted with the Power of Attorney by Applicant form (PTO/AIA/82B) to identify the application to which the Power of Attorney is directed, in accordance with 37 CFR 1.5, unless the application number and filing date are identified in the Power of Attorney by Applicant form. If neither form PTO/AIA/82A nor form PTO/AIA82B identifies the application to which the Power of Attorney is directed, the Power of Attorney will not be recognized in the application.

Application Number	Not yet assigned
Filing Date	Herewith
First Named Inventor	Samuel English Anthony
Title	SYSTEM AND METHOD OF PREDICTING HUMAN INTERACTION WITH VEHICLES
Art Unit	Not yet assigned
Examiner Name	Not yet assigned
Attorney Docket Number	35447-43490/US

SIGNATURE of Applicant or Patent Practitioner

Signature	/Rajendra B. Panwar/	Date (Optional)	July 15, 2019
Name	Rajendra B. Panwar	Registration Number	63,165
Title (if Applicant is a juristic entity)	Attorney for Applicant		
Applicant Name (if Applicant is a juristic entity)	Perceptive Automata, Inc.		

NOTE: This form must be signed in accordance with 37 CFR 1.33. See 37 CFR 1.4(d) for signature requirements and certifications. If more than one applicant, use multiple forms.

☑ *Total of 1 forms are submitted.

This collection of information is required by 37 CFR 1.131, 1.32, and 1.33. The information is required to obtain or retain a benefit by the public which is to file (and by the USPTO to process) an application. Confidentiality is governed by 35 U.S.C. 122 and 37 CFR 1.11 and 1.14. This collection is estimated to take 3 minutes to complete, including gathering, preparing, and submitting the completed application form to the USPTO. Time will vary depending upon the individual case. Any comments on the amount of time you require to complete this form and/or suggestions for reducing this burden, should be sent to the Chief Information Officer, U.S. Patent and Trademark Office, U.S. Department of Commerce, P.O. Box 1450, Alexandria, VA 22313-1450. DO NOT SEND FEES OR COMPLETED FORMS TO THIS ADDRESS. **SEND TO: Commissioner for Patents, P.O. Box 1450, Alexandria, VA 22313-1450.**

If you need assistance in completing the form, call 1-800-PTO-9199 and select option 2.

PTO/AIA/82B (07-13)
Approved for use through 01/31/2018. OMB 0651-0035
U.S. Patent and Trademark Office; U.S. DEPARTMENT OF COMMERCE
Under the Paperwork Reduction Act of 1995, no persons are required to respond to a collection of information unless it displays a valid OMB control number

POWER OF ATTORNEY BY APPLICANT

I hereby revoke all previous powers of attorney given in the application identified in either the attached transmittal letter or the boxes below.

Application Number	Filing Date

(Note: The boxes above may be left blank if information is provided on form PTO/AIA/82A.)

☑ I hereby appoint the Patent Practitioner(s) associated with the following Customer Number as my/our attorney(s) or agent(s), and to transact all business in the United States Patent and Trademark Office connected therewith for the application referenced in the attached transmittal letter (form PTO/AIA/82A) or identified above: 00758

OR

☐ I hereby appoint Practitioner(s) named in the attached list (form PTO/AIA/82C) as my/our attorney(s) or agent(s), and to transact all business in the United States Patent and Trademark Office connected therewith for the patent application referenced in the attached transmittal letter (form PTO/AIA/82A) or identified above. (Note: Complete form PTO/AIA/82C.)

Please recognize or change the correspondence address for the application identified in the attached transmittal letter or the boxes above to:

☑ The address associated with the above-mentioned Customer Number

OR

☐ The address associated with Customer Number:

OR

☐ Firm or Individual Name					
Address					
City		State		Zip	
Country					
Telephone		Email			

I am the Applicant (if the Applicant is a juristic entity, list the Applicant name in the box):

PERCEPTIVE AUTOMATA, INC.

☐ Inventor or Joint Inventor (title not required below)

☐ Legal Representative of a Deceased or Legally Incapacitated Inventor (title not required below)

☑ Assignee or Person to Whom the Inventor is Under an Obligation to Assign (provide signer's title if applicant is a juristic entity)

☐ Person Who Otherwise Shows Sufficient Proprietary Interest (e.g., a petition under 37 CFR 1.46(b)(2) was granted in the application or is concurrently being filed with this document) (provide signer's title if applicant is a juristic entity)

SIGNATURE of Applicant for Patent

The undersigned (whose title is supplied below) is authorized to act on behalf of the applicant (e.g., where the applicant is a juristic entity).

Signature		Date (Optional)	
Name	Kshitij "Sid" Misra		
Title	Chief Executive Officer		

NOTE: Signature - This form must be signed by the applicant in accordance with 37 CFR 1.33. See 37 CFR 1.4 for signature requirements and certifications. If more than one applicant, use multiple forms.

☑ Total of 1 forms are submitted.

This collection of information is required by 37 CFR 1.131, 1.32, and 1.33. The information is required to obtain or retain a benefit by the public which is to file (and by the USPTO to process) an application. Confidentiality is governed by 35 U.S.C. 122 and 37 CFR 1.11 and 1.14. This collection is estimated to take 3 minutes to complete, including gathering, preparing, and submitting the completed application form to the USPTO. Time will vary depending upon the individual case. Any comments on the amount of time you require to complete this form and/or suggestions for reducing this burden, should be sent to the Chief Information Officer, U.S. Patent and Trademark Office, U.S. Department of Commerce, P.O. Box 1450, Alexandria, VA 22313-1450. DO NOT SEND FEES OR COMPLETED FORMS TO THIS ADDRESS. **SEND TO: Commissioner for Patents, P.O. Box 1450, Alexandria, VA 22313-1450.**

If you need assistance in completing the form, call 1-800-PTO-9199 and select option 3.

ABSTRACT

Systems and methods for predicting user interaction with vehicles. A computing device receives an image and a video segment of a road scene, the first at least one of an image and a video segment being taken from a perspective of a participant in the road scene and then generates stimulus data based on the image and the video segment. Stimulus data is transmitted to a user interface and response data is received, which includes at least one of an action and a likelihood of the action corresponding to another participant in the road scene. The computing device aggregates a subset of the plurality of response data to form statistical data and a model is created based on the statistical data. The model is applied to another image or video segment and a prediction of user behavior in the another image or video segment is generated.

We claim:

1. A computer-implemented method comprising:

receiving, by a computing device associated with an autonomous vehicle operating on a road, sensor data captured by a sensor installed on the autonomous vehicle, the sensor data displaying an object on the road;

providing the sensor data as input to a supervised learning based model, the supervised learning based model configured to receive an input sensor data displaying a particular object on a road and predicting an output statistical summary characterizing a distribution of user responses expected to be received responsive to presenting the sensor data to a plurality of users, the user responses associated with the particular object;

executing the trained supervised learning based model to generate a statistical summary data characterizing a distribution of user responses expected to be received responsive to presenting the sensor data captured by the sensor installed on the autonomous vehicle;

controlling the operation of the autonomous vehicle on the road based on the generated statistical summary data.

2. The computer-implemented method of claim 1, wherein the supervised learning based model is one of:

a random forest regressor,

a support vector regressor,

a simple neural network,

a deep convolutional neural network,

a recurrent neural network,

or a long- short-term memory (LSTM) neural network.

3. The computer-implemented method of claim 1, wherein the object on the road is one of:

a pedestrian,

a cyclist, or

a motor vehicle.

4. The computer-implemented method of claim 1, wherein the user responses describe an action associated with the object, the action including one of the object staying in place, changing lanes, or crossing a street.

5. The computer-implemented method of claim 1, wherein the statistical data is associated with a parameter of the subset of the plurality of response data, the parameter including at least one of a content of a response, a time associated with entering a response, and a position of an eye of a human observer associated with the response, the position being measured with respect to a display associated with the user interface.

6. The computer-implemented method of claim 5, wherein the parameter is further associated with at least one of a central tendency, a variance, a skew, a kurtosis, a scale, and a histogram.

7. The computer-implemented method of claim 1, wherein the supervised learning based model is configured to predict user responses describing a state of mind of a road user associated with the object.

8. The computer-implemented method of claim 1, wherein the object is associated with a road user and the supervised learning based model is configured to predict user responses describing an intention of the road user to move into the path of the autonomous vehicle.

9. The computer-implemented method of claim 1, wherein the object is associated with a road user and the supervised learning based model is configured to predict user responses describing awareness of the road user of the autonomous vehicle.

10. A non-transitory computer readable storage medium storing instructions that when executed by one or more processors, cause the one or more processors to perform the steps comprising:

receiving, by a computing device associated with an autonomous vehicle operating on a road, sensor data captured by a sensor installed on the autonomous vehicle, the sensor data displaying an object on the road;

providing the sensor data as input to a supervised learning based model, the supervised learning based model configured to receive an input sensor data displaying a particular object on a road and predicting an output statistical summary characterizing a distribution of user responses expected to be received responsive to presenting the sensor data to a plurality of users, the user responses associated with the particular object;

executing the trained supervised learning based model to generate a statistical summary data characterizing a distribution of user responses expected to be received responsive to presenting the sensor data captured by the sensor installed on the autonomous vehicle;

controlling the operation of the autonomous vehicle on the road based on the generated statistical summary data.

11. The non-transitory computer readable storage medium of claim 10, wherein the supervised learning based model is one of:

a random forest regressor,

a support vector regressor,

a simple neural network,

a deep convolutional neural network,

a recurrent neural network,

or a long- short-term memory (LSTM) neural network.

12. The non-transitory computer readable storage medium of claim 10, wherein the object on the road is one of:

a pedestrian,

a cyclist, or

a motor vehicle.

13. The non-transitory computer readable storage medium of claim 10, wherein the user responses describe an action associated with the object, the action including one of the object staying in place, changing lanes, or crossing a street.

14. The non-transitory computer readable storage medium of claim 10, wherein the statistical data is associated with a parameter of the subset of the plurality of response data, the parameter including at least one of a content of a response, a time associated with entering a response, and a position of an eye of a human observer associated with the response, the position being measured with respect to a display associated with the user interface.

15. The non-transitory computer readable storage medium of claim 14, wherein the parameter is further associated with at least one of a central tendency, a variance, a skew, a kurtosis, a scale, and a histogram.

16. The non-transitory computer readable storage medium of claim 10, wherein the supervised learning based model is configured to predict user responses describing a state of mind of a road user associated with the object.

17. The non-transitory computer readable storage medium of claim 10, wherein the object is associated with a road user and the supervised learning based model is configured to predict user responses describing an intention of the road user to move into the path of the autonomous vehicle.

18. The non-transitory computer readable storage medium of claim 10, wherein the object is associated with a road user and the supervised learning based model is configured to predict user responses describing awareness of the road user of the autonomous vehicle.

19. A computing system comprising:

one or more processors; and

a non-transitory computer readable storage medium, storing instructions that when executed by the one or more processors, cause the one or more processors to perform steps comprising:

receiving, by a computing device associated with an autonomous vehicle operating on a road, sensor data captured by a sensor installed on the autonomous vehicle, the sensor data displaying an object on the road;

providing the sensor data as input to a supervised learning based model, the supervised learning based model configured to receive an input sensor data displaying a particular object on a road and predicting an output statistical summary characterizing a distribution of user responses expected to be received responsive to presenting the sensor data to a plurality of users, the user responses associated with the particular object;

executing the trained supervised learning based model to generate a statistical summary data characterizing a distribution of user responses expected to be received responsive to presenting the sensor data captured by the sensor installed on the autonomous vehicle;

controlling the operation of the autonomous vehicle on the road based on the generated statistical summary data.

20. The computing system of claim 19, wherein the supervised learning based model is configured to predict user responses describing a state of mind of a road user associated with the object.

21. The computing system of claim 19, wherein the object is associated with a road user and the supervised learning based model is configured to predict user responses describing an intention of the road user to move into the path of the autonomous vehicle.

22. The computing system of claim 19, wherein the object is associated with a road user and the supervised learning based model is configured to predict user responses describing awareness of the road user of the autonomous vehicle.

SYSTEM AND METHOD OF PREDICTING HUMAN INTERACTION WITH VEHICLES

Inventors:
Samuel English ANTHONY
Kshitij MISRA
Avery Wagner FALLER

CROSS REFERENCE TO RELATED APPLICATIONS

[0001] This application is a continuation of U.S. Patent Application 15/830,549, filed on December 4, 2017, which claims priority under 35 U.S.C. § 1 19(e) to U.S. Provisional Application No. 62/528,771, filed July 5, 2017, the contents of each of which are incorporated by reference herein.

TECHNICAL FIELD

[0002] The present disclosure relates generally to data analytics, and in particular, to predicting human interaction with vehicles.

BACKGROUND

[0003] The ability a driver of a car to look at a person—who is walking, driving another car, or riding a bike on or near a street—and predict what that person wants to do may be the single most important part of urban driving. For example, when a driver of a car sees people near the car, determining whether one person will cross the street, whether another person will remain standing on a street corner, and whether yet another person will change lanes on his or her bicycle is necessary to safely drive the car and avoid hitting the people. This ability is so fundamental, that operating in cities without it would be nearly impossible.

[0004] Fortunately, human drivers have such a natural ability to predict a person's behavior. In fact, they can do it so effortlessly, that they often do not even notice that they

are doing it. However, computers and autonomous driving vehicles cannot adequately predict the behavior of people, especially in urban environments.

[0005] For example, autonomous driving vehicles may rely on methods that make decisions on how to control the vehicles by predicting "motion vectors" of people near the vehicles. This is accomplished by collecting data of a person's current and past movements, determining a motion vector of the person at a current time based on these movements, and extrapolating a future motion vector representing the person's predicted motion at a future time based on the current motion vector. However, the methods do not predict a person's actions or movements based on other observations besides his or her current and past movements, which lead to inferior results in predicting the person's future behavior.

SUMMARY OF THE INVENTION

[0006] Systems and methods for predicting user interaction with vehicles enabling motorists, cyclists, and pedestrians to anticipate the actions of other motorists, cyclists, and pedestrians. In some embodiments, a computing device receives a first at least one of an image and a video segment of a road scene, the first at least one of an image and a video segment being taken from a perspective of a participant in the road scene, the first at least one of an image and a video segment including at least one of a pedestrian, a cyclist, and a motor vehicle. In some embodiments, the computing device generates stimulus data based on the first at least one of the image and the video segment, the stimulus data comprising at least one of the first at least one of the image and the video segment, and an altered version of the first at least one of the image and the video segment. In some embodiments, the computing device transmits the stimulus data to a user interface. In some embodiments, the computing device receives a plurality of response data from the user interface, the response data including user inputted data by associated with the stimulus data, the user inputted data including at least one of an action and a likelihood of the action corresponding to at least one

TESLA EXHIBIT 1009, Page 13

of the pedestrian, the cyclist, and the motor vehicle associated with the road scene. In some embodiments, the computing device aggregates a subset of the plurality of response data corresponding to one of the first at least one of the image and the video segment to form statistical data. In some embodiments, the computing device creates a model based on the statistical data and applies the model to a second at least one image or video segment. In some embodiments, the computing device generates a prediction of user behavior in the second at least one image or video segment based on the application of the model to the second at least one image or video segment.

[0007] In some embodiments, creating the model further comprises training a supervised learning algorithm, the supervised learning algorithm including at least one of a random forest regressor, a support vector regressor, a simple neural network, a deep convolutional neural network, a recurrent neural network, and a long-short-term memory **(LSTM)** neural network. In some embodiments, generating the stimulus data further comprises manipulating at least one of pixel data or array data associated with the first at least one of the image and the video segment and creating a manipulated data file including the manipulated at least one of pixel data or array data associated with the first at least one of the image and the video segment. In some embodiments, the manipulated data file includes a looped version of extracted frames from the first at least one of the image and the video segment. In some embodiments, the action includes one of the at least one of the pedestrian, the cyclist, and the motor vehicle staying in place, changing lanes, and crossing a street, and the likelihood of the action includes an ordinal value associated with a probability of the action. In some embodiments, the statistical data is associated with a parameter of the subset of the plurality of response data, the parameter including at least one of a content of a response, a time associated with entering a response, and a position of an eye of a human observer associated with the response, the position being measured with respect to a display associated with the

user interface. The parameter is further associated with at least one of a central tendency, a variance, a skew, a kurtosis, a scale, and a histogram. In some embodiments, the second at least one image or video segment is associated with a live road scene. In some embodiments, the computing device further comprises receiving the second at least one image or video segment from another computing device associated with a vehicle participating in the live road scene. In some embodiments, the second at least one image or video segment is the same as the first at least one image or video segment and the computing device further compares the prediction of user behavior with the statistical data to generate an error signal and adjusts at least one weight associated with the model based on the error signal.

[0008] These and other capabilities of the disclosed subject matter will be more fully understood after a review of the following figures, detailed description, and claims. It is to be understood that the phraseology and terminology employed herein are for the purpose of setting forth illustrative examples of the invention, and the description should not be regarded as limiting.

BRIEF DESCRIPTION OF FIGURES

[0009] Various objectives, features, and advantages of the disclosed subject matter can be more fully appreciated with reference to the following detailed description of the disclosed subject matter when considered in connection with the following drawings, in which like reference numerals identify like elements.

[0010] FIG. 1 is a system diagram of a networked system for predicting human behavior according to some embodiments of the present disclosure.

[0011] FIG. 2A is a flow chart showing a process of predicting human behavior, according to some embodiments of the present disclosure.

[0012] FIG. 2B shows an example of a derived stimulus, according to some embodiments of the present disclosure.

[0013] FIG. 3 is a system diagram showing a sensor system associated with a vehicle, according to some embodiments of the present disclosure.

[0014] FIG. 4 shows a process of generating derived stimuli from raw camera or sensor data in the vehicle, according to some embodiments of the present disclosure.

[0015] FIG. 5 is a flowchart showing a process of collecting predictions and other information from human observers based on derived stimuli, according to some embodiments of the present disclosure.

[0016] FIG. 6 shows a data structure associated with tracking video frame data, according to some embodiments of the present disclosure.

[0017] FIG. 7 is a flowchart showing a process for producing summary statistics of a video frame or derived stimulus according to some embodiments of the present disclosure.

[0018] FIG. 8 is a flowchart showing a process of training a learning algorithm using summary statistics, according to some embodiments of the present disclosure.

[0019] FIG 9. is a flowchart showing a process of predicting the state of mind of road users using a trained learning algorithm, according to some embodiments of the present disclosure.

[0020] FIG. 10 is a diagram showing an example of an application of a context user prediction process in an automobile context, according to some embodiments of the present disclosure.

DETAILED DESCRIPTION

[0021] Systems and methods are described for judging the behavior of people near a vehicle in a way that more closely resembles how human drivers would judge the behavior. For example, in one embodiment, a group of users (or human observers) view sample images of people (such as pedestrians) near streets and/or vehicles and indicate or are measured for their understanding of how they believe the people will behave. These indicators or

TESLA EXHIBIT 1009, Page 16

measurements are then used as a component for training an algorithm that predicts how people will behave in a real-world context. In other words, after being trained based on the reactions of human observers to sample images in a training environment, the algorithm is able predict actual pedestrian behavior in a real-world environment.

[0022] In a further implementation, human observers are presented with small samples of video data that have been modified to focus the observers on aspects of the samples most likely to be relevant to predicting pedestrian or other driver behavior, and to eliminate aspects which are not relevant to prediction such behavior. Large sets of observers are asked to score the samples of video data on a continuum, and the scored samples are collected. The overall collection of scores on the continuum comprises a distribution of "scores." The parameters of this distribution are then used to construct a target for the learning model of an algorithm for subsequently predicting pedestrian or driver behavior in a real-world environment.

[0023] FIG. 1 is a system diagram of a networked system for predicting human behavior according to some embodiments of the present disclosure. FIG. 1 shows a vehicle 102, a network 104, a server 106, a user response database 110, a user terminal 108, a model training system 112 and a prediction engine 114.

[0024] The vehicle 102 can be any type of manual or motorized vehicle such as a car, bus, train, scooter, or bicycle. As described in more detail below, the vehicle 102 can include sensors for monitoring the environment surrounding the vehicle. In one implementation, the sensors can include a camera affixed to any portion of the vehicle for capturing a video of people near the vehicle.

[0025] The network 104 can be any wired and/or wireless network capable of receiving sensor data collected by the vehicle 102 and distributing it to the server 106, the model training system 112, and, through the model training system 112, the prediction engine 114.

[0026] The server 106 can be any type of computer system capable of (1) hosting information (such as image, video and text information) and delivering it to a user terminal (such as user terminal 108), (2) recording responses of multiple users (or human observers) to the information, and (3) delivering such information and accompanying responses (such as responses input via user terminal 108) back to the network 104.

[0027] The user response database 110 can be any type of database or data storage system capable of storing the image, video, and text information and associated user responses and subsequently recalling them in response to a query.

[0028] The model training system 112 can be implemented in any type of computing system. In one embodiment, the system 112 receives the image, video, and/or text information and accompanying, or linked, user responses from the database 110 over the network 104. In some embodiments, the text segments are discrete values or free text responses. The model training system 112 can use images, video segments and text segments as training examples to train an algorithm, and can create labels from the accompanying user responses based on the trained algorithm. These labels indicate how the algorithm predicts the behavior of the people in the associated image, video, and/or text segments. After the labels are created, the model training system 112 can transmit them to the prediction engine 144.

[0029] The prediction engine 114 can be implemented in any computing system. In an illustrative example, the engine 114 includes an algorithm that has been trained by the model training system 112. This trained algorithm is able to estimate a label for a new (*e.g.,* an actual "real-world") image, video, and/or text segment based on the labels and associated image, video, and/or text segments that it received from the model training system 112. In some embodiments, this label comprises aggregate or summary information about the

responses of a large number of users (or human observers) presented with similar image, video, or text segments while the algorithm was being trained.

[0030] FIG. 2A is a flow chart showing a process of predicting human behavior, according to some embodiments of the present disclosure. In one implementation, video or other data is captured by a camera or sensor mounted on the vehicle 102. The camera or other sensor can be mounted in a fixed or temporary manner to the vehicle 102. Of course, the camera does not need to be mounted to an automobile, and could be mounted to another type of vehicle, such as a bicycle. As the vehicle travels along various streets, the camera or sensor captures still and/or moving images (or other sensor data) of pedestrians, bicycles, automobiles, *etc.* moving or being stationary on or near the streets. In step 202, this video or other data captured by the camera or other sensor is transmitted from the vehicle 102, over the network 104, and to the server 106 where it is stored.

[0031] Then, in step 204, video frames or segments are extracted from the stored video or other data and are used to create stimulus data including derived stimulus (or stimuli). In one implementation, the derived stimulus corresponds to a scene in which one or more humans are conducting activities (*e.g.,* standing, walking, driving, riding a bicycle, *etc.*) beside or on a street and/or near a vehicle. As explained in more detail below for example in step 214 and in the text accompanying FIG. 9, as part of the training process for the prediction algorithm, human observers view the derived stimulus and predict how they believe the humans shown in the derived stimulus will act. In yet a further implementation, after the video frames or segments are extracted from the stored data, the derived stimulus is generated by manipulating the pixels or equivalent array data acquired from the camera or other sensor in step 204, producing a new data file that conveys a portion of the information from the original video with certain aspects highlighted or obscured, as described below in FIG 4.

[0032] FIG. 2B shows an example of a derived stimulus, according to some embodiments of the present disclosure. As shown, three non-consecutive frames 220, 222, 223, and 224, are extracted from a short segment of video. A copy of the first frame is made 220. On the copy of the first frame 220, a box 221 is drawn around the figure of interest, highlighting that figure. The copy of the first frame 220 and the three extracted frames 222, 223, and 224 are then recombined into a short video segment that loops. This encourages human observers to focus on a figure of interest in the video segment.

[0033] In step 206, the derived stimulus is transmitted from the server 106 and displayed to a large number of users (or human observers) on the user terminal 108 (or multiple terminals 108). The terminal(s) 108 prompt the human observers to predict how the people shown in the derived stimulus will act, and upon viewing the displayed stimulus, the observers input their responses corresponding to their predictions. For example, in the derived stimulus shown in FIG. 2B, the human observers may predict that the bicyclist will continue riding to the left in the figure. In other derived stimuli, the responses may predict whether a first person in the stimulus will cross the street, another person will remain standing on a street corner, and yet another person will change lanes on his or her bicycle. In an illustrative embodiment, the human observers may make a continuous or ordinal judgment about the state of mind or the predicted behavior of the people shown in the derived stimulus and record that judgment. For example, the human observers may select an appropriate icon displayed on the terminal(s) 108 by clicking a mouse or by pressing a key to indicate their judgment or prediction. The judgment or prediction may correspond to the human observers' assessment of the state of mind of the person in the derived stimulus or other awareness or intention that would be relevant to a hypothetical driver who sees the person in the derived stimulus while driving. In step 208, the derived stimulus and associated human observer

responses are transmitted from the terminal(s) 108 to the server 106 and recorded in the user response database 110.

[0034] In step 210, summary statistics are generated based on the user responses. For example, the statistics may characterize the aggregate responses of multiple human observers to a particular derived stimulus. For instance, if the derived stimulus shows a pedestrian walking on a sidewalk towards an intersection, the response can be categorized in terms of how many human observers believe that the pedestrian will stop upon reaching the intersection, continue walking straight across the intersection, turn a corner and continue walking along the sidewalk without crossing the intersection, *etc.* These summary statistics can characterize the human observer responses in terms of certain parameters associated with the statistics, such as a content of a response, a time associated with entering a response, and a position of an eye of a human observer associated with the response. The parameters can also be associated with a (1) central tendency, variance, skew, kurtosis, scale, or histogram. For example, the amount of time users took to input their responses can be characterized in terms of central tendency, variance, skew, kurtosis, scale, histogram. Also, the statistics can include a parameter that additionally or alternatively characterizes the movement of the human observers' eyes relative to a display when making the judgments in terms of central tendency, variance, skew, kurtosis, scale, histogram or two-dimensional distribution. In one embodiment, the statistics are stored in the user response database 110 with an index that identifies the raw video or sensor data from which the derived stimulus was generated. In a further embodiment, the statistics stored in the database 110 cover a large set of images of people on or near roads and are categorized in a number of different categories, such as pedestrian, driver, motorcyclist, bicyclist, scooter driver, self-balancing scooter rider, unicyclist, motorized wheelchair user, skateboarder, or others. Moreover, the statistics are

respectively stored along with, or linked to, the images of the derived stimuli corresponding to the statistics.

[0035] In step 212, the stored statistics and corresponding images (*e.g.,* the video frames or segments that were extracted from the video or other data (captured from the camera or sensor of the vehicle 202)) are sent over the network 104 to the model training system 112 and used to train a prediction algorithm. For example, the collection of images and statistics can be used to train a supervised learning algorithm, which can comprise a random forest regressor, a support vector regressor, a simple neural network, a deep convolutional neural network, a recurrent neural network, a long-short-term memory **(LSTM)** neural network with linear or nonlinear kernels that are two dimensional or three dimensional, or any other supervised learning algorithm which is able to take a collection of data labeled with continuous values and adapt its architecture in terms of weights, structure or other characteristics to minimize the deviation between its predicted label on a novel stimulus and the actual label collected on that stimulus using the same method as was used on the set of stimuli used to train that network. The model is given data which comprises some subset of the pixel data from the video frames that the summary statistics were generated from. In one implementation, this subset includes the pixel data contained in a box (such as the box 221 shown in FIG. 2B) drawn to contain the boundaries of the person, cyclist, motorist and vehicle, or other road user, including their mode of conveyance. In some other implementations, it also includes the entire pixel data from the rest of the image. In one of those implementations, that pixel data is selected according to criteria such as the salience of those features in terms of contrast, lighting, presence of edges, or color. In an additional implementation, the features can include descriptive meta-data about the images such as the dimensions and location of the bounding box, the shape of the bounding box or the change in size or position of the bounding box from one frame to the next.

[0036] In step 214, the prediction engine 114 uses the trained model from the model training system 112 to predict the actual, "real-world" or "live data" behavior of people on or near a road. In one embodiment, the prediction engine 114 receives "live data" that matches the format of the data used to train the trained model. For example, if the trained model was trained based on video data received from a camera on the vehicle 102, the "live data" that is input to the algorithm likewise is video data from the same or similar type camera. On the other hand, if the model was trained based on another type of sensor data received from another type of sensor on the vehicle 102, the "live data" that is input to the prediction engine 114 likewise is the other type of data from the same or similar sensor.

[0037] The trained model or algorithm makes a prediction of what a pedestrian or other person shown in the "live data" would do based on the summary statistics and/or training labels of one or more derived stimulus. The accuracy of the model is determined by having it make predictions of novel derived stimuli that were not part of the training images previously mentioned but which do have human ratings attached to them, such that the summary statistics on the novel images can be generated using the same method as was used to generate the summary statistics for the training data, but where the correlation between summary statistics and image data was not part of the model training process. The predictions produced by the trained model comprise a set of predictions of the state of mind of road users that can then be used to improve the performance of autonomous vehicles, robots, virtual agents, trucks, bicycles, or other systems that operate on roadways by allowing them to make judgments about the future behavior of road users based on their state of mind.

[0038] FIG. 3 is a system diagram showing a sensor system associated with a vehicle, according to some embodiments of the present disclosure. FIG. 3 shows a vehicle 306 with arrows pointing to the locations of its sensors 300, a local processor and storage 302, and remote storage 304.

[0039] Data is collected from cameras or other sensors 300 including solid state Lidar, rotating Lidar, medium range radar, or others mounted on the car in either a fixed or temporary capacity and oriented such that they capture images of the road ahead, behind, and/or to the side of the car. In some embodiments, the sensor data is recorded on a physical storage medium (not shown) such as a compact flash drive, hard drive, solid state drive or dedicated data logger. In some embodiments, the sensors 300 and storage media are managed by the processor 302.

[0040] The sensor data can be transferred from the in-car data storage medium and processor 302 to another storage medium 304 which could include cloud-based, desktop, or hosted server storage products. In some embodiments, the sensor data can be stored as video, video segments, or video frames.

[0041] In some embodiments, data in the remote storage 304 also includes database tables associated with the sensor data. When sensor data is received, a row can be added to a database table that records information about the sensor data that was recorded, including where it was recorded, by whom, on what date, how long the segment is, where the physical files can be found either on the internet or on local storage, what the resolution of the sensor data is, what type of sensor it was recorded on, the position of the sensor, and other characteristics.

[0042] FIG. 4 shows a process of generating derived stimuli from raw camera or sensor data in the vehicle, according to some embodiments of the present disclosure.

[0043] Referring to step 400, video or data frames are selected according to a method which selects either random or specific frames from video or sensor data segments. As described above, sensor data can include video segments or specific frames. These frames can either be contiguous or non-contiguous, and can be in the original order, in a permuted order, in reverse order, or in random order. Some of the frames can be repeated once or more

than once. The frames are selected so that when human observers are later presented with reordered versions of the sequences of frames, they perceive either the actual motion of humans in the scene that was captured in the original video, or motion that is a product of the ordering of the frames but which diverges via reordering from the motion that was originally captured. The temporal information that the human observers looking at the sets of images or derived stimulus are able to use to answer questions about the sets of images may be therefore limited or expanded to include specific temporal cues that were or were not in the original sequence.

[0044] Referring to step 402, some of the frames can be manipulated. The frames can be manipulated by adjusting pixel values. These manipulations can include blurring, the addition or one or more occluding bars, bands, or shapes, sharpening, the removal of color information, the manipulation of color information, the drawing of non-occluding or highlighting shapes on the image, other manipulations, or a combination of the manipulations listed here, or a combination of the manipulations listed here with other manipulations, or other manipulations of the pixels not listed combined with each other. The manipulations serve the purpose of highlighting, occluding or degrading portions of the image, so that when the images are shown to the human observers, they are directed to people or specific portions of the image when predicting what the people in the images will do. For example, using the highlighting described above, a certain pedestrian in a scene can be isolated such that a human observer's feedback can be more reliably associated with the pedestrian.

[0045] Referring to step 404, frames can be recombined to form a derived stimulus. In some embodiments, if there is only one frame that frame comprises the derived stimulus. If there is more than one frame those frames may then be recombined. The recombination into a temporal segment can involve the frames having the same display time and interval as in the original video clip or could involve faster, slower or variable display times. The timing of

the recombination is chosen in order to shape the perceived temporal duration of the activities visible in the original video segment so the judgments the observers make will rely on temporal information that is or is not identical to that featured in the original image.

[0046] FIG. 5 is a flowchart showing a process of collecting predictions and other information from human observers based on derived stimuli, according to some embodiments of the present disclosure. In step 500, human observers are given detailed instructions about how to answer questions about derived stimuli. In step 502, those observers are presented with derived stimuli and asked to answer questions about them. In step 504, the observers respond to the stimuli and those responses are recorded. In step 506, the recorded responses are aggregated and logged in a database. For example, the responses may be sent to and logged in the user response database 110 (FIG. 1).

[0047] Referring to step 500, in one example, some number of human observers (two or more) are recruited to participate on one or several crowdsourcing websites, such as Amazon's Mechanical Turk or at a physical location provided with a display. The observers are given detailed written and pictorial instructions explaining the task that they are about to complete. These instructions give examples of situations that might be depicted in the derived stimuli, and the kinds of responses that would be appropriate for those situations. For example, if human observers are asked to judge the intention of a pedestrian to walk in front of a car, the instructions may be: "In this test, we want you to pretend you're driving a car. You'll see road scenes with cyclists highlighted, and you'll have to decide what they're planning to do. Try to answer as quickly as you can. If a box contains more than one cyclist, try to judge if any of them intends to ride into the path of your car. Some of the images might be small, or dark, but just do your best."

[0048] Referring to step 502, the human observers may be shown a display which includes the derived stimulus. The display also includes a mechanism for making a judgment

about the stimulus. The mechanism for making the judgment can be a continuous indicator such as a ribbon on which the observer could drag a control to a certain point. The mechanism can also be an ordinal measure such as a Likert scale where the observer can make a judgment about a degree of certainty of the judgment. The mechanism can also be a control that the human observer drags with their mouse to draw a trajectory onscreen indicating a judgment. The mechanism can also be a text entry field where the observer types a description of their judgment. The judgment that the human observer makes is an evaluation of the state of mind of a road user depicted in the derived stimulus. The evaluation can be of the intention, awareness, personality, state of consciousness, level of tiredness, aggressiveness, enthusiasm, thoughtfulness or another characteristic of the internal mental state of the pictured road user. If the ratings collected are on an ordinal scale they can describe the characteristic using language of probability, such as "the other driver may be attentive" or "the other driver" is definitely attentive" or "the other driver is definitely not attentive". The ratings of large numbers of human observers are collected. Summary statistics are generated based on the responses of all of the observers who looked at an image. Individual variability in responses to a given stimulus can be characterized in the information given by the observers to the learning algorithm. The summary statistics might include unweighted information from all observers, or might exclude observers based on extrinsic or intrinsic criteria such as the time it took an observer to respond, the geographical location of an observer, the observer's self-reported driving experience, or the observer's reliability in making ratings of a set of other images.

[0049] Referring to step 504, the explicit response of the observer is recorded as well as implicit data. The implicit data can include how long the subject took to respond, if they hesitated in their motions, if they deleted keystrokes, if they moved the mouse anywhere

other than the location corresponding to the response they eventually chose, where their eyes moved, or other implicit measures.

[0050] Referring to step 506, the responses are aggregated and recorded in a data structure, such as the user response database 110 (FIG. 1). This data structure is then sent as a text field to a networked computer system running database software and logged in a database.

[0051] FIG. 6 shows a data structure (*e.g.,* table) associated with tracking video frame data according to some embodiments of the present disclosure. Column 600 shows an example of a unique identifier for each human observer who rated an image. Column 602 shows a unique identifier for a given derived stimulus. Column 604 shows an example of a response from an observer recorded in the database. Column 606 shows an example of additional information - in this case response time — recorded by the database.

[0052] In reference to column 600, each observer who is shown the stimuli is given a unique identifier so that information about their response may be analyzed in the context of their responses to other images.

[0053] In reference to column 602, each derived stimulus that is rated by a human observer is listed with a filename and path that uniquely identifies that derived stimulus, and also indicates the original video frames from which that derived stimulus was generated.

[0054] In reference to column 604, for each stimulus rated by each human observer, a response is recorded that could be a continuous, discrete, or ordinal value. This value may refer to the probability of the pictured human road user has a given state of mind — e.g. that a pedestrian is likely to cross the street or that an oncoming vehicle is unlikely to be willing to yield to the vehicle containing the sensor if the vehicle containing the sensor needs to tum. In some embodiments, a higher ordinal value (e.g., the ordinal 4 as shown in FIG. 6) indicates that a human observer believes that there is a higher probability that the pictured

human road user has a given state of mind or will perform a particular action. On the other hand, a lower ordinal value (e.g., the ordinal 1 as shown in FIG. 6) indicates that the human observer believes that there is a lower probability that the pictured human road user has the state of mind or will perform the particular action. On the other hand, in some embodiments, a lower ordinal value can indicate a higher probability of an action, and a higher ordinal value can indicate a lower probability of an action.

[0055] In reference to column 606, an amount of time associated with a subject responding to the derived stimulus is also recorded. In some embodiments, this time is associated with the overall reliability of the human observer's rating. For example, a response associated with a lower response time may be weighted higher and a response associated with a slower response time may be weighted lower.

[0056] FIG. 7 is a flowchart showing a process for producing summary statistics of a video frame or derived stimulus according to some embodiments of the present disclosure. In step 700, per-image results are extracted from the database which stores responses from a human observer. In step 702, summary statistics are calculated using those per-image results. In step 704, records of the summary statistics attached to frames from the raw car data (not the derived stimuli) are recorded in a separate table.

[0057] Records of all of the responses by human observers on a given task for a given frame are extracted from the database in step 700. In one example, all of the responses of a given type are aggregated into a single data structure.

[0058] This data structure is queried to produce summary statistics in step 702. These summary statistics could include measurements of the central tendency of the distribution of scores like the mean, median, or mode. They could include measurements of the heterogeneity of the scores like variance, standard deviation, skew, kurtosis, heteroskedasticity, multimodality, or uniformness. They could also include summary

statistics like those above calculated from the implicit measurements of the responses listed above.

[0059] The calculated summary statistics are recorded in a database table in step 704 attached to a unique identifier which links them to the video frame or sensor data frame associated with the responses from which they were calculated.

[0060] FIG. 8 is a flowchart showing a process of training a learning algorithm using summary statistics, according to some embodiments of the present disclosure. For example, in one embodiment, the process may train an algorithm used in the model training system 112 in FIG. 1. In step 800, summary statistics linked to a given video or sensor frame are extracted from the database 110 in FIG. 1. Subsequently, in step 802, the video or sensor frame may be collated with the statistics label for the frame. The collated frame is provided to the learning algorithm in the model training system 112 in step 804, and this process yields a final learning algorithm in step 806.

[0061] In some embodiments, between one and three partitions are generated from the database records in step 800. These partitions each comprise a list of images in the set of images that have been manipulated to create derived stimuli and rated by human observers. At least one of these partitions is made to comprise a set of training data. An additional partition may be created to use as a set of validation data, a second list of images in the set of images that have been manipulated to create derived stimuli and rated by human images, but where the second validation set is not shown to the model in the learning phase, but is instead preserved to be used later for evaluation.

[0062] The list of images in the training data partition is collated with some or all of the summary statistics that have been generated from the human observer responses to those images and stored in the database in step 802, such that the summary statistics are associated with the appropriate image in the list which comprises the training partition.

[0063] Each combination of image and summary statistics comprises a single training sample for the learning algorithm in step 804. The algorithm may be any type of supervised learning algorithm capable of predicting a continuous label for a two or three dimensional input, including but not limited to a random forest regressor, a support vector regressor, a simple neural network, a deep convolutional neural network, a recurrent neural network, a long-short-term memory (LSTM) neural network with linear or nonlinear kernels that are two dimensional or three dimensional.

[0064] The learning algorithm is optimized by a process of progressively adjusting the parameters of that algorithm in response to the characteristics of the images and summary statistics given to it in the training phase to minimize the error in its predictions of the summary statistics for the training images in step 804. In one embodiment of the model training system 112, the algorithm can be a deep neural network. In this embodiment the parameters are the weights attached to the connections between the artificial neurons comprising the network. Pixel data from an image in a training set collated with human observer summary statistics in step 802 can serve as an input to the network. This input can be transformed according to a mathematical function by each of the artificial neurons, and then the transformed information can be transmitted from that artificial neuron to other artificial neurons in the neural network. The transmission between the first artificial neuron and the subsequent neurons can be modified by the weight parameters discussed above. In this embodiment, the neural network can be organized hierarchically such that the value of each input pixel can be transformed by independent layers (e.g., 10 to 20 layers) of artificial neurons, where the inputs for neurons at a given layer come from the previous layer, and all of the outputs for a neuron (and their associated weight parameters) go to the subsequent layer. At the end of the sequence of layers, in this embodiment, the network can produce numbers that are intended to match the human summary statistics given at the input. The

difference between the numbers that the network output and the human summary statistics provided at the input comprises an error signal. An algorithm (e.g., back-propagation) can be used to assign a small portion of the responsibility for the error to each of the weight parameters in the network. The weight parameters can then be adjusted such that their estimated contribution to the overall error is reduced. This process can be repeated for each image (or for each combination of pixel data and human observer summary statistics) in the training set collected via step 802. At the end of this process the model is "trained", which in some embodiments, means that the difference between the summary statistics output by the neural network and the summary statistics calculated from the responses of the human observers in step 506 is minimized.

[0065] FIG 9. is a flowchart showing a process of predicting the state of mind of road users using a trained learning algorithm, according to some embodiments of the present disclosure. In step 900, the training algorithm receives a "real world" or "live data" video or sensor frame. Then in step 902, the trained algorithm analyzes the frame, thus enabling the algorithm in step 904 to output a prediction of summary statistics on the frame.

[0066] The "real world" or "live data" video or other sensor frames from a car-mounted sensor are delivered to the trained learning algorithm in step 900. These frames have the same resolution, color depth and file format as the frames used to train the algorithm. These frames are delivered as individual frames or as sequences according to the format used to train the original algorithm.

[0067] Each of these frames is analyzed by being passed through the trained model in step 902. In one embodiment, the data from the frame that was passed through the model would comprise the pixel data from a camera. This data would be transformed by an artificial neural network that had been trained according to step 804. At the final stage of the

processing in the artificial network, it would produce an output. This output is the model output in step 904.

[0068] The model outputs a number or set of numbers that comprise the predicted summary statistics for the "real world" or "live data" image in step 904. The predicted summary statistics are the model's best estimation of what the summary statistics would be on the image if the image had human annotations collected. The prediction is generated automatically by passing the sensor data through the model, where the information is transformed by the internal mechanisms of the model according to the parameters that were set in the training process shown in step 804. Because these summary statistics characterize the distribution of human responses that predict the state of mind of a road user pictured in the stimulus, the predicted statistics are therefore a prediction of the aggregate judgment of human observers of the state of mind of the pictured road user and thus an indirect prediction of the actual state of mind of the road user.

[0069] FIG. 10 is a diagram showing an example of an application of a context user prediction process in an automobile context, according to some embodiments of the present disclosure. In this example intention 1006 1018 means that the road user 1002 1014 has the goal of moving into the path of the vehicle 1000 before the vehicle 1000 (on which the system is mounted) reaches their position. Awareness 1004 1016 in this example means that the road user 1002 1014 understands that the vehicle on which the system is mounted 1000 is present in their vicinity. In this example, when cyclist 1002 rides into the field of view of a camera mounted on vehicle 1000, the pixel data of the camera image of the cyclist is fed to a trained algorithm as described above in step 900. The trained algorithm analyzes the image as described above in step 902. The trained algorithm would predict summary statistics as in step 904. These summary statistics are an estimate of what the summary statistics would be for a collection of human observers who were shown a derived stimulus of the camera data as

in step 504. The estimates summary statistics are therefore the system's best answer to the question "does this cyclist intend to enter the path of the vehicle." The vehicle is therefore able to make a guess 1006 about the intention of the cyclist that is closely matched to the guess that a human driver would make in that same situation. In this example, the intention of the cyclist 1006 is relatively high, as indicated by the number of horizontal bars in the display. The system installed on an automobile 1000 also makes predictions about the awareness 1004 of cyclists of the vehicle 1000, by the same method described for intention. It also makes predictions about the willingness of an automobile 1008 to yield 1010 or its desire to turn across the system-containing vehicle's path 1012 by the same method described above. In the case of the automobile the questions that human subjects answered that would be predicted by the algorithm are "would the vehicle be willing to yield" 1010 and "does the vehicle wish to turn across your path" 1012. It also makes predictions about the desire of pedestrians 1014 to cross in front of the vehicle 1018, and whether those pedestrians are aware of the vehicle 1016, by the same method described above.

[0070] The models described above can be implemented as a real-time module that makes predictions of road user behavior based on input from cameras or other sensors installed on a car 1000. In the case of an autonomous car, these predictions can be used to make inferences about the intent of road users such as cyclists 1002, other motorists 1008, and pedestrians 1014 to cross into the path of the car, as well as whether the road users are aware of the car and its future path. They can also be used to predict whether other road users would be surprised, welcoming, or aggressively unwelcoming if the car were to engage in maneuvers which would take it into the path of another road user (e.g., would an oncoming car yield if the car implementing the systems and methods described herein were to turn left).

[0071] The subject matter described herein can be implemented in digital electronic circuitry, or in computer software, firmware, or hardware, including the structural means

disclosed in this specification and structural equivalents thereof, or in combinations of them. The subject matter described herein can be implemented as one or more computer program products, such as one or more computer programs tangibly embodied in an information carrier (e.g., in a machine readable storage device) or in a propagated signal, for execution by, or to control the operation of, data processing apparatus (e.g., a programmable processor, a computer, or multiple computers). A computer program (also known as a program, software, software application, or code) can be written in any form of programming language, including compiled or interpreted languages, and it can be deployed in any form, including as a stand-alone program or as a module, component, subroutine, or other unit suitable for use in a computing environment. A computer program does not necessarily correspond to a file. A program can be stored in a portion of a file that holds other programs or data, in a single file dedicated to the program in question, or in multiple coordinated files (e.g., files that store one or more modules, sub programs, or portions of code). A computer program can be deployed to be executed on one computer or on multiple computers at one site or distributed across multiple sites and interconnected by a communication network.

[0072] The processes and logic flows described in this specification, including the method steps of the subject matter described herein, can be performed by one or more programmable processors executing one or more computer programs to perform functions of the subject matter described herein by operating on input data and generating output. The processes and logic flows can also be performed by, and apparatus of the subject matter described herein can be implemented as, special purpose logic circuitry, e.g., an FPGA (field programmable gate array) or an ASIC (application specific integrated circuit).

[0073] Processors suitable for the execution of a computer program include, by way of example, both general and special purpose microprocessors, and any one or more processor of any kind of digital computer. Generally, a processor will receive instructions and data

from a read only memory or a random access memory or both. The essential elements of a computer are a processor for executing instructions and one or more memory devices for storing instructions and data. Generally, a computer will also include, or be operatively coupled to receive data from or transfer data to, or both, one or more mass storage devices for storing data, e.g., magnetic, magneto optical disks, or optical disks. Information carriers suitable for embodying computer program instructions and data include all forms of nonvolatile memory, including by way of example semiconductor memory devices, (e.g., EPROM, EEPROM, and flash memory devices); magnetic disks, (e.g., internal hard disks or removable disks); magneto optical disks; and optical disks (e.g., CD and DVD disks). The processor and the memory can be supplemented by, or incorporated in, special purpose logic circuitry.

[0074] To provide for interaction with a user, the subject matter described herein can be implemented on a computer having a display device, e.g., a CRT (cathode ray tube) or LCD (liquid crystal display) monitor, for displaying information to the user and a keyboard and a pointing device, (e.g., a mouse or a trackball), by which the user can provide input to the computer. Other kinds of devices can be used to provide for interaction with a user as well. For example, feedback provided to the user can be any form of sensory feedback, (e.g., visual feedback, auditory feedback, or tactile feedback), and input from the user can be received in any form, including acoustic, speech, or tactile input.

[0075] The subject matter described herein can be implemented in a computing system that includes a back end component (e.g., a data server), a middleware component (e.g., an application server), or a front end component (e.g., a client computer having a graphical user interface or a web browser through which a user can interact with an implementation of the subject matter described herein), or any combination of such back end, middleware, and front end components. The components of the system can be interconnected by any form or

medium of digital data communication, e.g., a communication network. Examples of communication networks include a local area network ("LAN") and a wide area network ("WAN"), e.g., the Internet.

[0076] It is to be understood that the disclosed subject matter is not limited in its application to the details of construction and to the arrangements of the components set forth in the following description or illustrated in the drawings. The disclosed subject matter is capable of other embodiments and of being practiced and carried out in various ways. Also, it is to be understood that the phraseology and terminology employed herein are for the purpose of description and should not be regarded as limiting.

[0077] As such, those skilled in the art will appreciate that the conception, upon which this disclosure is based, may readily be utilized as a basis for the designing of other structures, methods, and systems for carrying out the several purposes of the disclosed subject matter. It is important, therefore, that the claims be regarded as including such equivalent constructions insofar as they do not depart from the spirit and scope of the disclosed subject matter.

[0078] Although the disclosed subject matter has been described and illustrated in the foregoing exemplary embodiments, it is understood that the present disclosure has been made only by way of example, and that numerous changes in the details of implementation of the disclosed subject matter may be made without departing from the spirit and scope of the disclosed subject matter, which is limited only by the claims which follow.

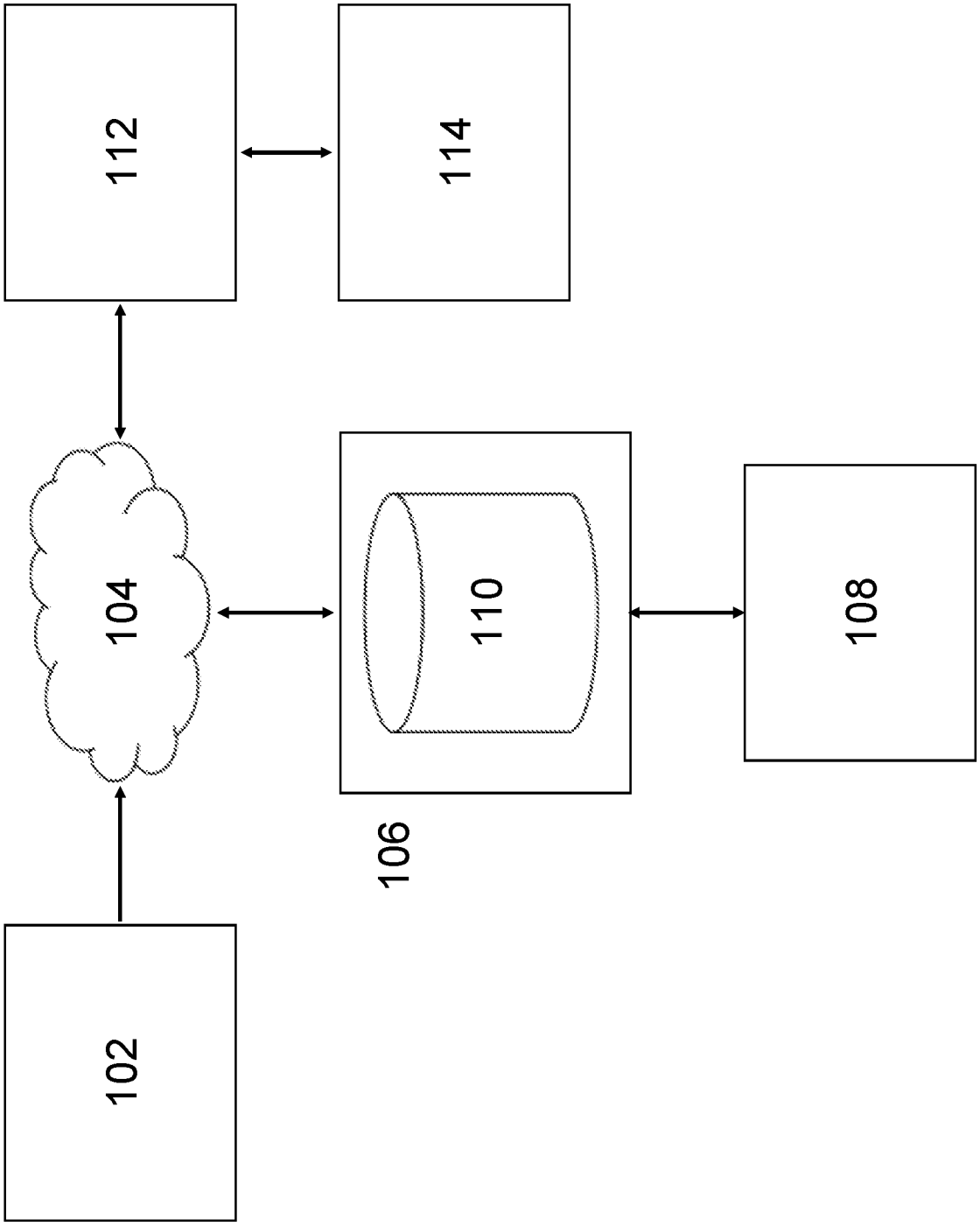

FIG. 1

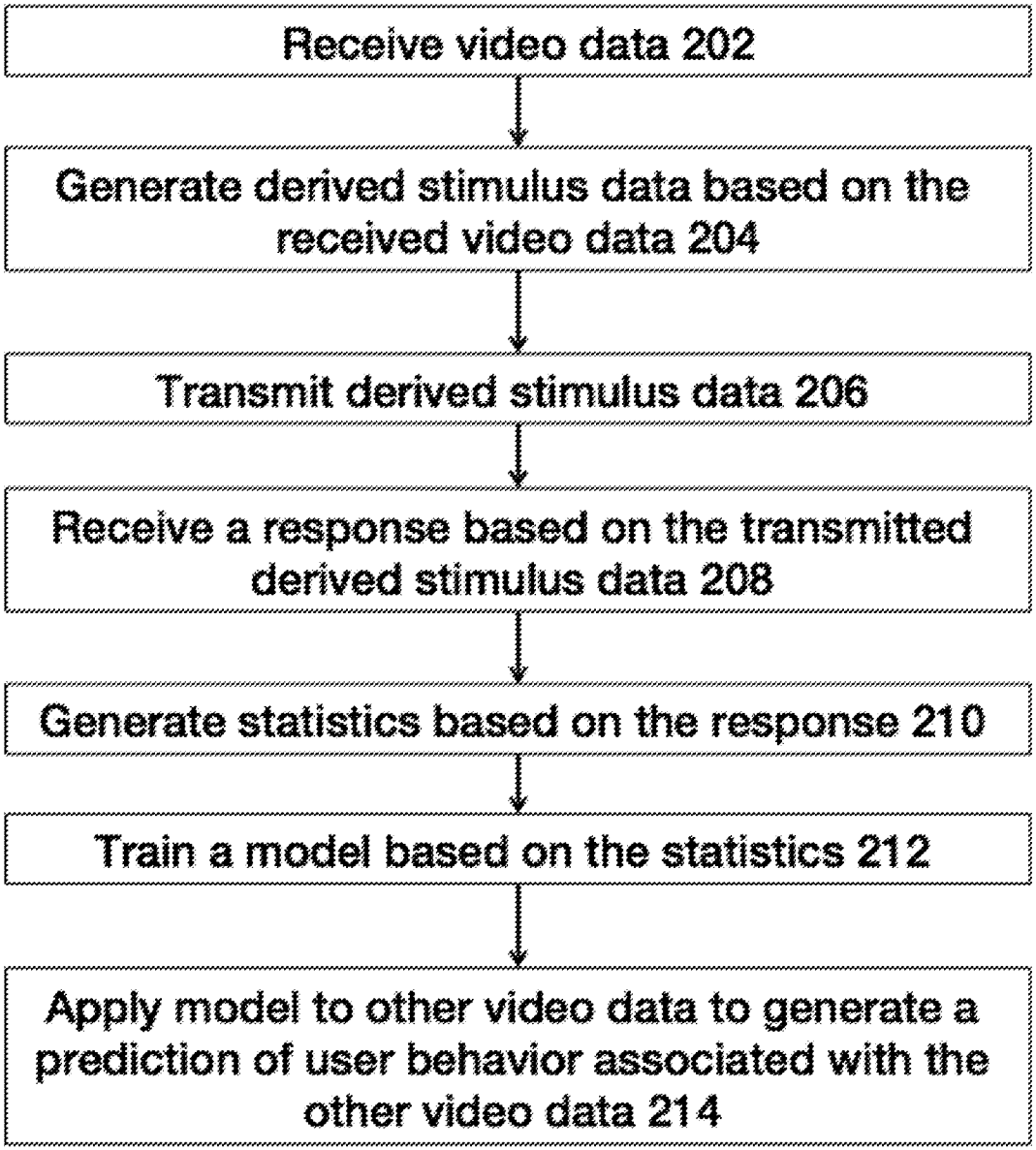
Receive video data 202
Generate derived stimulus data based on the received video data 204
Transmit derived stimulus data 206
Receive a response based on the transmitted derived stimulus data 208
Generate statistics based on the response 210
Train a model based on the statistics 212
Apply model to other video data to generate a prediction of user behavior associated with the other video data 214

FIG. 2A

FIG. 2B

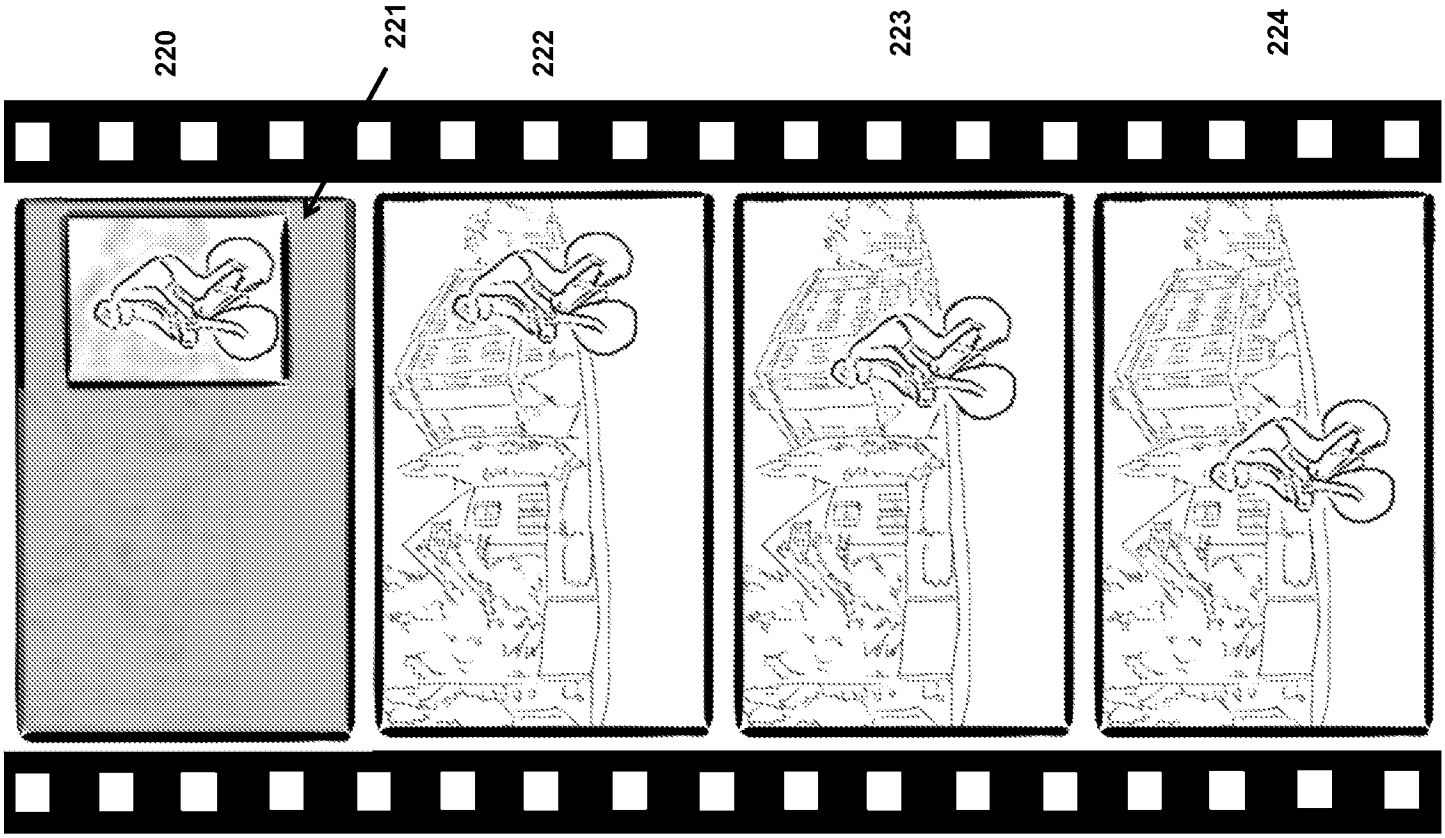

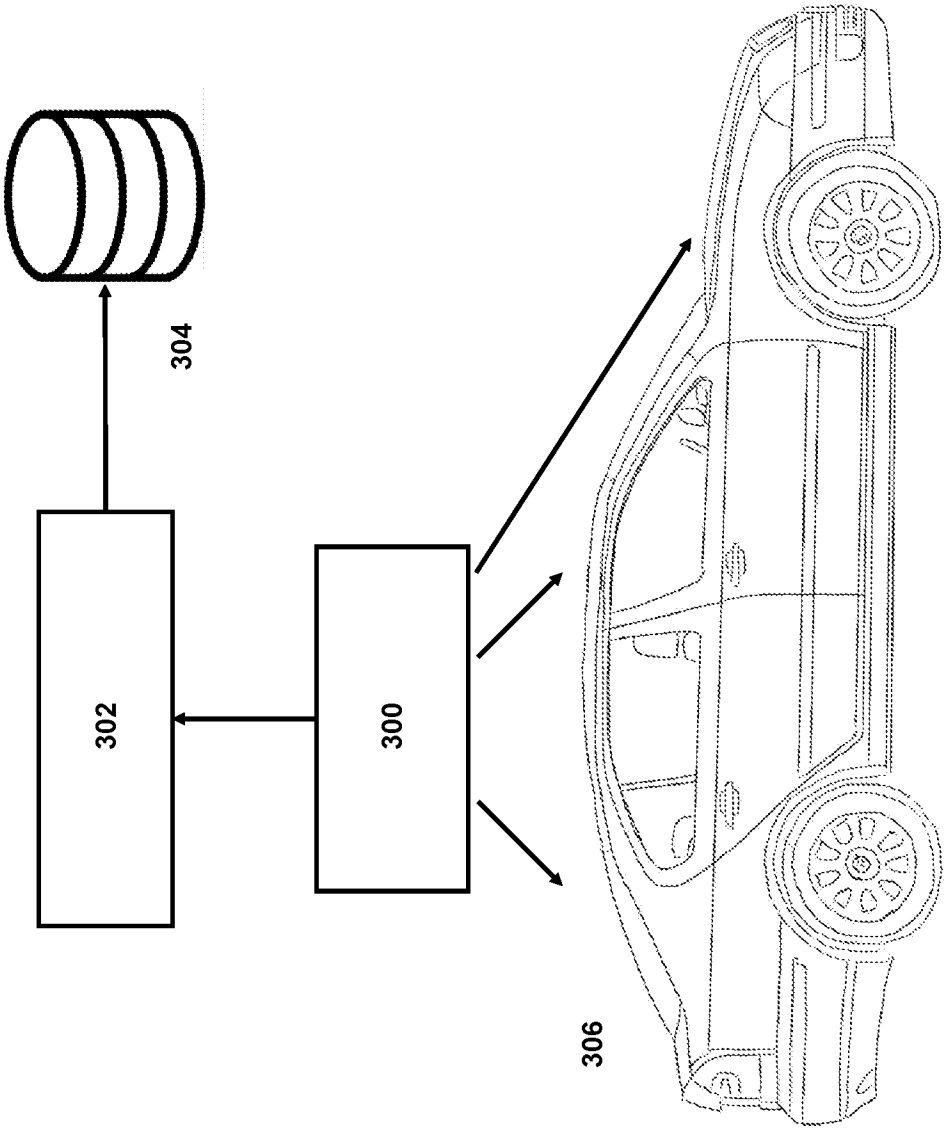

FIG. 3

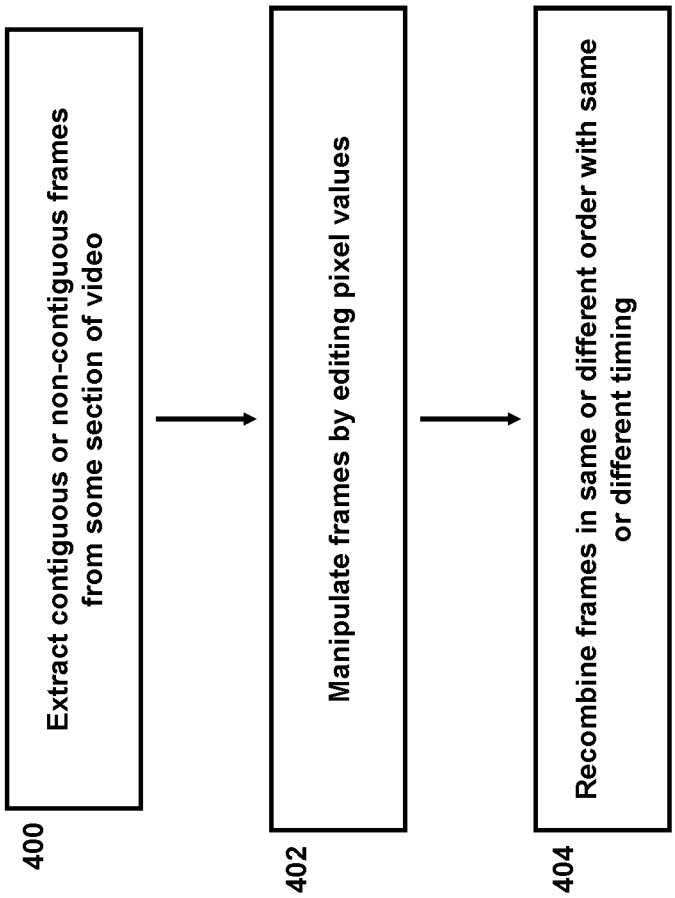
400
Extract contiguous or non-contiguous frames from some section of video
402
Manipulate frames by editing pixel values
404
Recombine frames in same or different order with same or different timing

FIG. 4

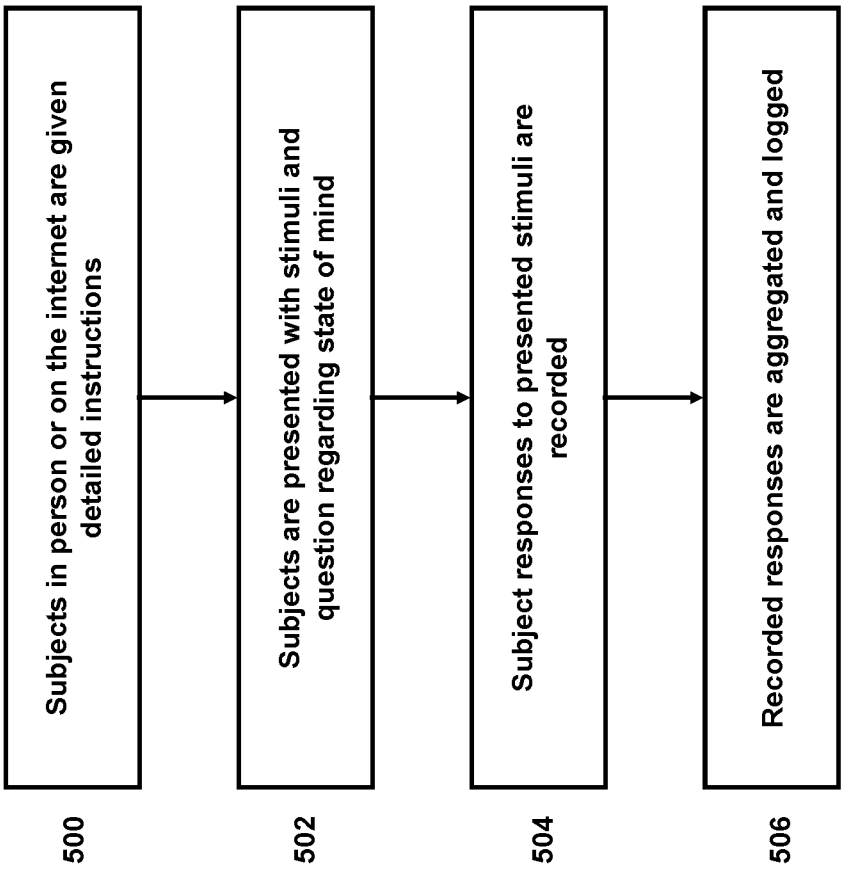
500
Subjects in person or on the internet are given detailed instructions
502
Subjects are presented with stimuli and question regarding state of mind
504
Subject responses to presented stimuli are recorded
506
Recorded responses are aggregated and logged

FIG. 5

600	602	604	606
subject_id	**derived_stim**	**response**	**response_time**
2329	/ims/seg114/vid44m22s23-28	3	440
2329	/ims/seg3932/vid329m24s01-16	1	600
2330	/ims/seg114/vid44m22s23-28	1	280
2330	/ims/seg118/vid51m02s44-50	4	500

FIG. 6

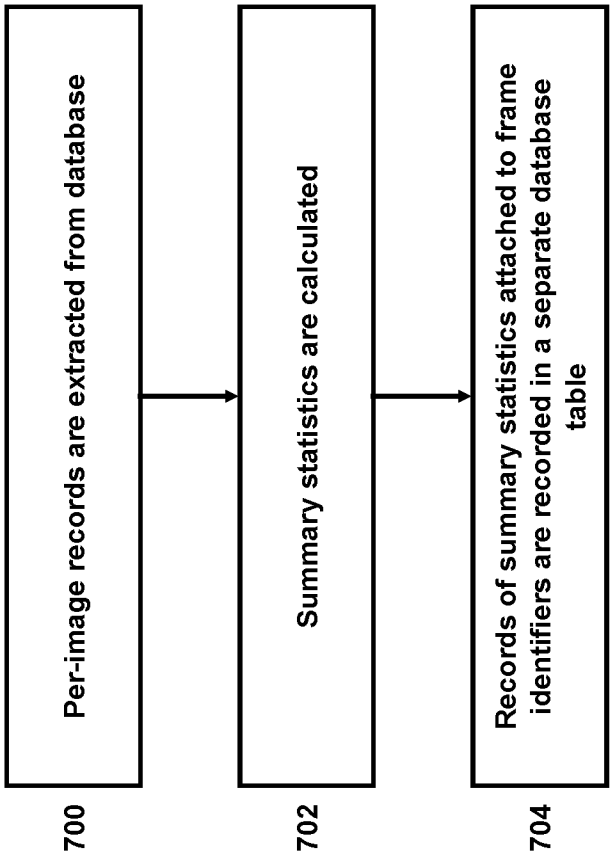
700
Per-image records are extracted from database
702
Summary statistics are calculated
704
Records of summary statistics attached to frame identifiers are recorded in a separate database table

FIG. 7

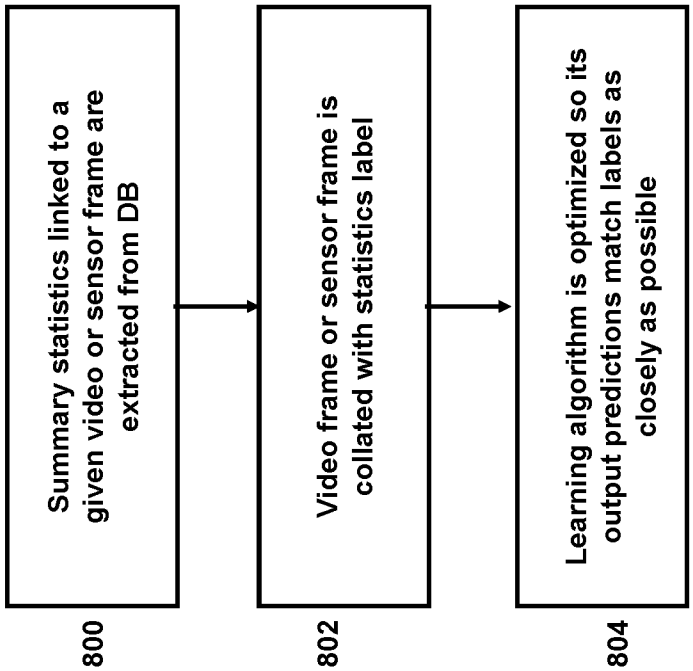
800
Summary statistics linked to a given video or sensor frame are extracted from DB
802
Video frame or sensor frame is collated with statistics label
804
Learning algorithm is optimized so its output predictions match labels as closely as possible

FIG. 8

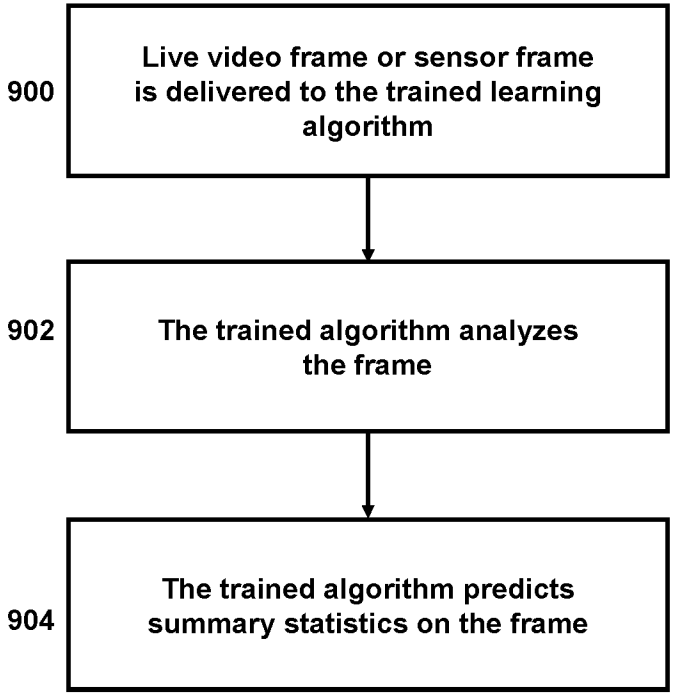
900
Live video frame or sensor frame is delivered to the trained learning algorithm
902
The trained algorithm analyzes the frame
904
The trained algorithm predicts summary statistics on the frame

FIG. 9

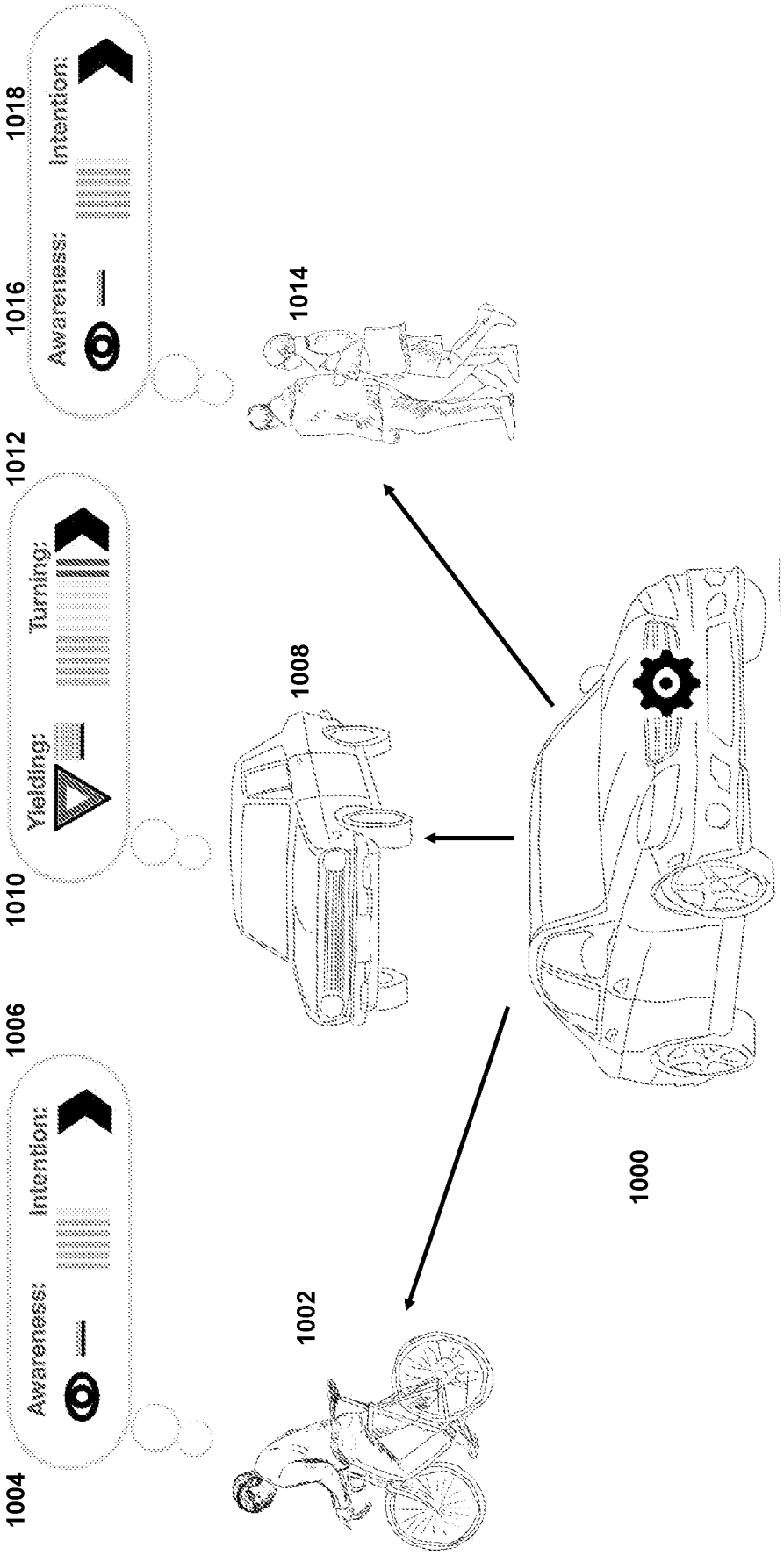
1004
Awareness:
Intention:
1006
1010
Yielding:
Turning:
1012
1016
Awareness:
Intention:
1018
1002
1008
1014
1000

FIG. 10

Electronic Patent Application Fee Transmittal

Application Number:	
Filing Date:	
Title of Invention:	SYSTEM AND METHOD OF PREDICTING HUMAN INTERACTION WITH VEHICLES
First Named Inventor/Applicant Name:	Samuel English Anthony
Filer:	Rajendra Bhagwatisingh Panwar/Natasha Pasciucco
Attorney Docket Number:	35447-43490/US

Filed as Small Entity

Filing Fees for Utility under 35 USC 111(a)

Description	Fee Code	Quantity	Amount	Sub-Total in USD($)
Basic Filing:				
UTILITY FILING FEE (ELECTRONIC FILING)	4011	1	75	75
UTILITY SEARCH FEE	2111	1	330	330
UTILITY EXAMINATION FEE	2311	1	380	380
Pages:				
Claims:				
Miscellaneous-Filing:				
LATE FILING FEE FOR OATH OR DECLARATION	2051	1	80	80
Petition:				

Description	Fee Code	Quantity	Amount	Sub-Total in USD($)
Patent-Appeals-and-Interference:				
Post-Allowance-and-Post-Issuance:				
Extension-of-Time:				
Miscellaneous:				
			Total in USD ($)	**865**

Electronic Acknowledgement Receipt

EFS ID:	36588035
Application Number:	16512560
International Application Number:	
Confirmation Number:	6385
Title of Invention:	SYSTEM AND METHOD OF PREDICTING HUMAN INTERACTION WITH VEHICLES
First Named Inventor/Applicant Name:	Samuel English Anthony
Customer Number:	758
Filer:	Rajendra Bhagwatisingh Panwar
Filer Authorized By:	
Attorney Docket Number:	35447-43490/US
Receipt Date:	16-JUL-2019
Filing Date:	
Time Stamp:	11:45:31
Application Type:	Utility under 35 USC 111(a)

Payment information:

Submitted with Payment	yes
Payment Type	DA
Payment was successfully received in RAM	$865
RAM confirmation Number	071619INTEFSW00011115192555
Deposit Account	192555
Authorized User	Rajendra Panwar

The Director of the USPTO is hereby authorized to charge indicated fees and credit any overpayment as follows:

37 CFR 1.16 (National application filing, search, and examination fees)

37 CFR 1.17 (Patent application and reexamination processing fees)

37 CFR 1.19 (Document supply fees)

37 CFR 1.20 (Post Issuance fees)

37 CFR 1.21 (Miscellaneous fees and charges)

File Listing:

Document Number	Document Description	File Name	File Size(Bytes)/ Message Digest	Multi Part /.zip	Pages (if appl.)
1	Application Data Sheet	43490_ADS.PDF	1822662 975295a52c98acb2b0af31668bcb6d6471d3a8c3	no	9
Warnings:					
Information:					
2	Internet Communications Authorized	43490_AIC.PDF	100667 47bb500192c1b6971c3310af8b191ad3f9a22265	no	2
Warnings:					
Information:					
3	Power of Attorney	43490_POA.PDF	757602 aea8336c3f78c753305e5d614a77e1723a0d7f77	no	2
Warnings:					
Information:					
4		43490_SPEC.pdf	153537 04735b1af35679d8ea945e568706278d7b83e8a7	yes	33

Multipart Description/PDF files in .zip description

Document Description	Start	End
Abstract	33	33
Claims	27	32
Specification	1	26

Warnings:					
Information:					
5	Drawings-only black and white line drawings	43490_FIGS.PDF	240113 51f9917bfa2fda0abca1086e36d850968f08c20c	no	11

Warnings:					
Information:					
6	Fee Worksheet (SB06)	fee-info.pdf	37203 197d7aafdaf59c7a2cecb7666f44f9bdd19f2de3	no	2
Warnings:					
Information:					
			Total Files Size (in bytes):	3111784	

This Acknowledgement Receipt evidences receipt on the noted date by the USPTO of the indicated documents, characterized by the applicant, and including page counts, where applicable. It serves as evidence of receipt similar to a Post Card, as described in MPEP 503.

New Applications Under 35 U.S.C. 111
If a new application is being filed and the application includes the necessary components for a filing date (see 37 CFR 1.53(b)-(d) and MPEP 506), a Filing Receipt (37 CFR 1.54) will be issued in due course and the date shown on this Acknowledgement Receipt will establish the filing date of the application.
National Stage of an International Application under 35 U.S.C. 371
If a timely submission to enter the national stage of an international application is compliant with the conditions of 35 U.S.C. 371 and other applicable requirements a Form PCT/DO/EO/903 indicating acceptance of the application as a national stage submission under 35 U.S.C. 371 will be issued in addition to the Filing Receipt, in due course.
New International Application Filed with the USPTO as a Receiving Office
If a new international application is being filed and the international application includes the necessary components for an international filing date (see PCT Article 11 and MPEP 1810), a Notification of the International Application Number and of the International Filing Date (Form PCT/RO/105) will be issued in due course, subject to prescriptions concerning national security, and the date shown on this Acknowledgement Receipt will establish the international filing date of the application.

PTO/AIA/14 (02-18)
Approved for use through 11/30/2020. OMB 0651-0032
U.S. Patent and Trademark Office; U.S. DEPARTMENT OF COMMERCE
Under the Paperwork Reduction Act of 1995, no persons are required to respond to a collection of information unless it contains a valid OMB control number.

Application Data Sheet 37 CFR 1.76	Attorney Docket Number	35447-43490/US
	Application Number	
Title of Invention	SYSTEM AND METHOD OF PREDICTING HUMAN INTERACTION WITH VEHICLES	

The application data sheet is part of the provisional or nonprovisional application for which it is being submitted. The following form contains the bibliographic data arranged in a format specified by the United States Patent and Trademark Office as outlined in 37 CFR 1.76.
This document may be completed electronically and submitted to the Office in electronic format using the Electronic Filing System (EFS) or the document may be printed and included in a paper filed application.

Secrecy Order 37 CFR 5.2:

☐ Portions or all of the application associated with this Application Data Sheet may fall under a Secrecy Order pursuant to 37 CFR 5.2 (Paper filers only. Applications that fall under Secrecy Order may not be filed electronically.)

Inventor Information:

Inventor 1 Remove

Legal Name

Prefix	Given Name	Middle Name	Family Name	Suffix
	Samuel	English	Anthony	

Residence Information (Select One) ● US Residency Non US Residency Active US Military Service

City	Cambridge	State/Province	MA	Country of Residence i	US

Mailing Address of Inventor:

Address 1	Perceptive Automata, Inc.
Address 2	230 Somerville Ave
City	Somerville
State/Province	MA
Postal Code	02143
Country i	US

Inventor 2 Remove

Legal Name

Prefix	Given Name	Middle Name	Family Name	Suffix
	Kshitij		Misra	

Residence Information (Select One) ◉ US Residency Non US Residency Active US Military Service

City	Cambridge	State/Province	MA	Country of Residence i	US

Mailing Address of Inventor:

Address 1	Perceptive Automata, Inc.
Address 2	230 Somerville Ave
City	Somerville
State/Province	MA
Postal Code	02143
Country i	US

Inventor 3 Remove

Legal Name

Prefix	Given Name	Middle Name	Family Name	Suffix
	Avery	Wagner	Faller	

Residence Information (Select One) ◉ US Residency Non US Residency Active US Military Service

Under the Paperwork Reduction Act of 1995, no persons are required to respond to a collection of information unless it contains a valid OMB control number.

Application Data Sheet 37 CFR 1.76	Attorney Docket Number	35447-43490/US
	Application Number	
Title of Invention	SYSTEM AND METHOD OF PREDICTING HUMAN INTERACTION WITH VEHICLES	

City	Cambridge	**State/Province**	MA	**Country of Residence** i	US

Mailing Address of Inventor:

Address 1	Perceptive Automata, Inc.		
Address 2	230 Somerville Ave		
City	Somerville	**State/Province**	MA
Postal Code	02143	**Country** i	US

All Inventors Must Be Listed - Additional Inventor Information blocks may be generated within this form by selecting the **Add** button. Add

Correspondence Information:

Enter either Customer Number or complete the Correspondence Information section below. For further information see 37 CFR 1.33(a).

☐ **An Address is being provided for the correspondence Information of this application.**

Customer Number	00758		
Email Address	ptoc@fenwick.com	Add Email	Remove Email

Application Information:

Title of the Invention	SYSTEM AND METHOD OF PREDICTING HUMAN INTERACTION WITH VEHICLES		
Attorney Docket Number	35447-43490/US	**Small Entity Status Claimed**	☒
Application Type	Nonprovisional		
Subject Matter	Utility		
Total Number of Drawing Sheets (if any)	11	**Suggested Figure for Publication (if any)**	

Filing By Reference:

Only complete this section when filing an application by reference under 35 U.S.C. 111(c) and 37 CFR 1.57(a). Do not complete this section if application papers including a specification and any drawings are being filed. Any domestic benefit or foreign priority information must be provided in the appropriate section(s) below (i.e., "Domestic Benefit/National Stage Information" and "Foreign Priority Information").

For the purposes of a filing date under 37 CFR 1.53(b), the description and any drawings of the present application are replaced by this reference to the previously filed application, subject to conditions and requirements of 37 CFR 1.57(a).

Application number of the previously filed application	Filing date (YYYY-MM-DD)	Intellectual Property Authority or Country i

Publication Information:

☐ Request Early Publication (Fee required at time of Request 37 CFR 1.219)

☐ **Request Not to Publish.** I hereby request that the attached application not be published under 35 U.S.C. 122(b) and certify that the invention disclosed in the attached application **has not and will not** be the subject of an application filed in another country, or under a multilateral international agreement, that requires publication at eighteen months after filing.

Under the Paperwork Reduction Act of 1995, no persons are required to respond to a collection of information unless it contains a valid OMB control number.

Application Data Sheet 37 CFR 1.76	Attorney Docket Number	35447-43490/US
	Application Number	
Title of Invention	SYSTEM AND METHOD OF PREDICTING HUMAN INTERACTION WITH VEHICLES	

Representative Information:

Representative information should be provided for all practitioners having a power of attorney in the application. Providing this information in the Application Data Sheet does not constitute a power of attorney in the application (see 37 CFR 1.32).
Either enter Customer Number or complete the Representative Name section below. If both sections are completed the customer Number will be used for the Representative Information during processing.

Please Select One:	● Customer Number	US Patent Practitioner	◯ Limited Recognition (37 CFR 11.9)
Customer Number	00758		

Domestic Benefit/National Stage Information:

This section allows for the applicant to either claim benefit under 35 U.S.C. 119(e), 120, 121, 365(c), or 386(c) or indicate National Stage entry from a PCT application. Providing benefit claim information in the Application Data Sheet constitutes the specific reference required by 35 U.S.C. 119(e) or 120, and 37 CFR 1.78.
When referring to the current application, please leave the "Application Number" field blank.

Prior Application Status	Pending		Remove
Application Number	Continuity Type	Prior Application Number	Filing or 371(c) Date (YYYY-MM-DD)
	Continuation of	15830549	2017-12-04
Prior Application Status	Expired		Remove
Application Number	Continuity Type	Prior Application Number	Filing or 371(c) Date (YYYY-MM-DD)
15830549	Claims benefit of provisional	62528771	2017-07-05

Additional Domestic Benefit/National Stage Data may be generated within this form by selecting the **Add** button. Add

Foreign Priority Information:

This section allows for the applicant to claim priority to a foreign application. Providing this information in the application data sheet constitutes the claim for priority as required by 35 U.S.C. 119(b) and 37 CFR 1.55. When priority is claimed to a foreign application that is eligible for retrieval under the priority document exchange program (PDX)[i] the information will be used by the Office to automatically attempt retrieval pursuant to 37 CFR 1.55(i)(1) and (2). Under the PDX program, applicant bears the ultimate responsibility for ensuring that a copy of the foreign application is received by the Office from the participating foreign intellectual property office, or a certified copy of the foreign priority application is filed, within the time period specified in 37 CFR 1.55(g)(1).

Under the Paperwork Reduction Act of 1995, no persons are required to respond to a collection of information unless it contains a valid OMB control number.

Application Data Sheet 37 CFR 1.76	Attorney Docket Number	35447-43490/US
	Application Number	
Title of Invention	SYSTEM AND METHOD OF PREDICTING HUMAN INTERACTION WITH VEHICLES	

Remove

Application Number	Country[i]	Filing Date (YYYY-MM-DD)	Access Code[i] (if applicable)

Additional Foreign Priority Data may be generated within this form by selecting the **Add** button. Add

Statement under 37 CFR 1.55 or 1.78 for AIA (First Inventor to File) Transition Applications

☐ This application (1) claims priority to or the benefit of an application filed before March 16, 2013 and (2) also contains, or contained at any time, a claim to a claimed invention that has an effective filing date on or after March 16, 2013.
NOTE: By providing this statement under 37 CFR 1.55 or 1.78, this application, with a filing date on or after March 16, 2013, will be examined under the first inventor to file provisions of the AIA.

Application Data Sheet 37 CFR 1.76	Attorney Docket Number	35447-43490/US
	Application Number	
Title of Invention	SYSTEM AND METHOD OF PREDICTING HUMAN INTERACTION WITH VEHICLES	

Authorization or Opt-Out of Authorization to Permit Access:

When this Application Data Sheet is properly signed and filed with the application, applicant has provided written authority to permit a participating foreign intellectual property (IP) office access to the instant application-as-filed (see paragraph A in subsection 1 below) and the European Patent Office (EPO) access to any search results from the instant application (see paragraph B in subsection 1 below).

Should applicant choose not to provide an authorization identified in subsection 1 below, applicant **must opt-out** of the authorization by checking the corresponding box A or B or both in subsection 2 below.

NOTE: This section of the Application Data Sheet is **ONLY** reviewed and processed with the **INITIAL** filing of an application. After the initial filing of an application, an Application Data Sheet cannot be used to provide or rescind authorization for access by a foreign IP office(s). Instead, Form PTO/SB/39 or PTO/SB/69 must be used as appropriate.

1. Authorization to Permit Access by a Foreign Intellectual Property Office(s)

A. Priority Document Exchange (PDX) - Unless box A in subsection 2 (opt-out of authorization) is checked, the undersigned hereby **grants the USPTO authority** to provide the European Patent Office (EPO), the Japan Patent Office (JPO), the Korean Intellectual Property Office (KIPO), the State Intellectual Property Office of the People's Republic of China (SIPO), the World Intellectual Property Organization (WIPO), and any other foreign intellectual property office participating with the USPTO in a bilateral or multilateral priority document exchange agreement in which a foreign application claiming priority to the instant patent application is filed, access to: (1) the instant patent application-as-filed and its related bibliographic data, (2) any foreign or domestic application to which priority or benefit is claimed by the instant application and its related bibliographic data, and (3) the date of filing of this Authorization. See 37 CFR 1.14(h)(1).

B. Search Results from U.S. Application to EPO - Unless box B in subsection 2 (opt-out of authorization) is checked, the undersigned hereby **grants the USPTO authority** to provide the EPO access to the bibliographic data and search results from the instant patent application when a European patent application claiming priority to the instant patent application is filed. See 37 CFR 1.14(h)(2).

The applicant is reminded that the EPO's Rule 141(1) EPC (European Patent Convention) requires applicants to submit a copy of search results from the instant application without delay in a European patent application that claims priority to the instant application.

2. Opt-Out of Authorizations to Permit Access by a Foreign Intellectual Property Office(s)

☐ A. Applicant **DOES NOT** authorize the USPTO to permit a participating foreign IP office access to the instant application-as-filed. If this box is checked, the USPTO will not be providing a participating foreign IP office with any documents and information identified in subsection 1A above.

☐ B. Applicant **DOES NOT** authorize the USPTO to transmit to the EPO any search results from the instant patent application. If this box is checked, the USPTO will not be providing the EPO with search results from the instant application.

NOTE: Once the application has published or is otherwise publicly available, the USPTO may provide access to the application in accordance with 37 CFR 1.14.

Under the Paperwork Reduction Act of 1995, no persons are required to respond to a collection of information unless it contains a valid OMB control number.

Application Data Sheet 37 CFR 1.76	Attorney Docket Number	35447-43490/US
	Application Number	
Title of Invention	SYSTEM AND METHOD OF PREDICTING HUMAN INTERACTION WITH VEHICLES	

Applicant Information:

Providing assignment information in this section does not substitute for compliance with any requirement of part 3 of Title 37 of CFR to have an assignment recorded by the Office.

Applicant 1 Remove

If the applicant is the inventor (or the remaining joint inventor or inventors under 37 CFR 1.45), this section should not be completed. The information to be provided in this section is the name and address of the legal representative who is the applicant under 37 CFR 1.43; or the name and address of the assignee, person to whom the inventor is under an obligation to assign the invention, or person who otherwise shows sufficient proprietary interest in the matter who is the applicant under 37 CFR 1.46. If the applicant is an applicant under 37 CFR 1.46 (assignee, person to whom the inventor is obligated to assign, or person who otherwise shows sufficient proprietary interest) together with one or more joint inventors, then the joint inventor or inventors who are also the applicant should be identified in this section. Clear

● Assignee	Legal Representative under 35 U.S.C. 117	Joint Inventor
Person to whom the inventor is obligated to assign.	Person who shows sufficient proprietary interest	

If applicant is the legal representative, indicate the authority to file the patent application, the inventor is:

Name of the Deceased or Legally Incapacitated Inventor:

If the Applicant is an Organization check here. ☒

Organization Name	Perceptive Automata Inc.		
Mailing Address Information For Applicant:			
Address 1	230 Somerville Ave		
Address 2			
City	Somerville	**State/Province**	MA
Country	US	Postal Code	02143
Phone Number		Fax Number	
Email Address			

Additional Applicant Data may be generated within this form by selecting the Add button. Add

Assignee Information including Non-Applicant Assignee Information:

Providing assignment information in this section does not substitute for compliance with any requirement of part 3 of Title 37 of CFR to have an assignment recorded by the Office.

Under the Paperwork Reduction Act of 1995, no persons are required to respond to a collection of information unless it contains a valid OMB control number.

Application Data Sheet 37 CFR 1.76	Attorney Docket Number	35447-43490/US
	Application Number	
Title of Invention	SYSTEM AND METHOD OF PREDICTING HUMAN INTERACTION WITH VEHICLES	

Assignee 1

Complete this section if assignee information, including non-applicant assignee information, is desired to be included on the patent application publication. An assignee-applicant identified in the "Applicant Information" section will appear on the patent application publication as an applicant. For an assignee-applicant, complete this section only if identification as an assignee is also desired on the patent application publication.

Remove

If the Assignee or Non-Applicant Assignee is an Organization check here. ☐

Prefix	**Given Name**	Middle Name	**Family Name**	Suffix

Mailing Address Information For Assignee including Non-Applicant Assignee:

Address 1			
Address 2			
City		**State/Province**	
Country i		Postal Code	
Phone Number		Fax Number	
Email Address			

Additional Assignee or Non-Applicant Assignee Data may be generated within this form by selecting the Add button. Add

Signature:

Remove

NOTE: This Application Data Sheet must be signed in accordance with 37 CFR 1.33(b). **However, if this Application Data Sheet is submitted with the INITIAL filing of the application and either box A or B is not checked in subsection 2 of the "Authorization or Opt-Out of Authorization to Permit Access" section, then this form must also be signed in accordance with 37 CFR 1.14(c).**

This Application Data Sheet **must** be signed by a patent practitioner if one or more of the applicants is a **juristic entity** (e.g., corporation or association). If the applicant is two or more joint inventors, this form must be signed by a patent practitioner, **all** joint inventors who are the applicant, or one or more joint inventor-applicants who have been given power of attorney (e.g., see USPTO Form PTO/AIA/81) on behalf of **all** joint inventor-applicants.

See 37 CFR 1.4(d) for the manner of making signatures and certifications.

Signature	/Rajendra Panwar/			Date (YYYY-MM-DD)	2019-07-15
First Name	Rajendra B.	Last Name	Panwar	Registration Number	63165

Additional Signature may be generated within this form by selecting the Add button. Add

Application Data Sheet 37 CFR 1.76	Attorney Docket Number	35447-43490/US
	Application Number	
Title of Invention	SYSTEM AND METHOD OF PREDICTING HUMAN INTERACTION WITH VEHICLES	

This collection of information is required by 37 CFR 1.76. The information is required to obtain or retain a benefit by the public which is to file (and by the USPTO to process) an application. Confidentiality is governed by 35 U.S.C. 122 and 37 CFR 1.14. This collection is estimated to take 23 minutes to complete, including gathering, preparing, and submitting the completed application data sheet form to the USPTO. Time will vary depending upon the individual case. Any comments on the amount of time you require to complete this form and/or suggestions for reducing this burden, should be sent to the Chief Information Officer, U.S. Patent and Trademark Office, U.S. Department of Commerce, P.O. Box 1450, Alexandria, VA 22313-1450. DO NOT SEND FEES OR COMPLETED FORMS TO THIS ADDRESS. **SEND TO: Commissioner for Patents, P.O. Box 1450, Alexandria, VA 22313-1450.**

Privacy Act Statement

The Privacy Act of 1974 (P.L. 93-579) requires that you be given certain information in connection with your submission of the attached form related to a patent application or patent. Accordingly, pursuant to the requirements of the Act, please be advised that: (1) the general authority for the collection of this information is 35 U.S.C. 2(b)(2); (2) furnishing of the information solicited is voluntary; and (3) the principal purpose for which the information is used by the U.S. Patent and Trademark Office is to process and/or examine your submission related to a patent application or patent. If you do not furnish the requested information, the U.S. Patent and Trademark Office may not be able to process and/or examine your submission, which may result in termination of proceedings or abandonment of the application or expiration of the patent.

The information provided by you in this form will be subject to the following routine uses:

1 The information on this form will be treated confidentially to the extent allowed under the Freedom of Information Act (5 U.S.C. 552) and the Privacy Act (5 U.S.C. 552a). Records from this system of records may be disclosed to the Department of Justice to determine whether the Freedom of Information Act requires disclosure of these records.

2. A record from this system of records may be disclosed, as a routine use, in the course of presenting evidence to a court, magistrate, or administrative tribunal, including disclosures to opposing counsel in the course of settlement negotiations.

3 A record in this system of records may be disclosed, as a routine use, to a Member of Congress submitting a request involving an individual, to whom the record pertains, when the individual has requested assistance from the Member with respect to the subject matter of the record.

4. A record in this system of records may be disclosed, as a routine use, to a contractor of the Agency having need for the information in order to perform a contract. Recipients of information shall be required to comply with the requirements of the Privacy Act of 1974, as amended, pursuant to 5 U.S.C. 552a(m).

5. A record related to an International Application filed under the Patent Cooperation Treaty in this system of records may be disclosed, as a routine use, to the International Bureau of the World Intellectual Property Organization, pursuant to the Patent CooperationTreaty.

6. A record in this system of records may be disclosed, as a routine use, to another federal agency for purposes of National Security review (35 U.S.C. 181) and for review pursuant to the Atomic Energy Act (42 U.S.C. 218(c)).

7. A record from this system of records may be disclosed, as a routine use, to the Administrator, General Services, or his/her designee, during an inspection of records conducted by GSA as part of that agency's responsibility to recommend improvements in records management practices and programs, under authority of 44 U.S.C. 2904 and 2906. Such disclosure shall be made in accordance with the GSA regulations governing inspection of records for this purpose, and any other relevant (i.e., GSA or Commerce) directive. Such disclosure shall not be used to make determinations about individuals.

8. A record from this system of records may be disclosed, as a routine use, to the public after either publication of the application pursuant to 35 U.S.C. 122(b) or issuance of a patent pursuant to 35 U.S.C. 151. Further, a record may be disclosed, subject to the limitations of 37 CFR 1.14, as a routine use, to the public if the record was filed in an application which became abandoned or in which the proceedings were terminated and which application is referenced by either a published application, an application open to public inspections or an issued patent.

9. A record from this system of records may be disclosed, as a routine use, to a Federal, State, or local law enforcement agency, if the USPTO becomes aware of a violation or potential violation of law or regulation.

PATENT APPLICATION FEE DETERMINATION RECORD

Substitute for Form PTO-875

Application or Docket Number
16/512,560

APPLICATION AS FILED - PART I

FOR	(Column 1) NUMBER FILED	(Column 2) NUMBER EXTRA	SMALL ENTITY RATE($)	SMALL ENTITY FEE($)	OR	OTHER THAN SMALL ENTITY RATE($)	OTHER THAN SMALL ENTITY FEE($)
BASIC FEE (37 CFR 1.16(a), (b), or (c))	N/A	N/A	N/A	75		N/A	
SEARCH FEE (37 CFR 1.16(k), (i), or (m))	N/A	N/A	N/A	330		N/A	
EXAMINATION FEE (37 CFR 1.16(o), (p), or (q))	N/A	N/A	N/A	380		N/A	
TOTAL CLAIMS (37 CFR 1.16(i))	22 minus 20 =	* 2	x 50 =	100	OR		
INDEPENDENT CLAIMS (37 CFR 1.16(h))	3 minus 3 =	*	x 230 =	0.00			
APPLICATION SIZE FEE (37 CFR 1.16(s))	If the specification and drawings exceed 100 sheets of paper, the application size fee due is $310 ($155 for small entity) for each additional 50 sheets or fraction thereof. See 35 U.S.C. 41(a)(1)(G) and 37 CFR 1.16(s).			0.00			
MULTIPLE DEPENDENT CLAIM PRESENT (37 CFR 1.16(j))				0.00			
* If the difference in column 1 is less than zero, enter "0" in column 2.			TOTAL	885		TOTAL	

APPLICATION AS AMENDED - PART II

		(Column 1) CLAIMS REMAINING AFTER AMENDMENT		(Column 2) HIGHEST NUMBER PREVIOUSLY PAID FOR	(Column 3) PRESENT EXTRA	SMALL ENTITY RATE($)	SMALL ENTITY ADDITIONAL FEE($)	OR	OTHER THAN SMALL ENTITY RATE($)	OTHER THAN SMALL ENTITY ADDITIONAL FEE($)
AMENDMENT A	Total (37 CFR 1.16(i))	*	Minus	**	=	x =		OR	x =	
AMENDMENT A	Independent (37 CFR 1.16(h))	*	Minus	***	=	x =		OR	x =	
AMENDMENT A	Application Size Fee (37 CFR 1.16(s))									
AMENDMENT A	FIRST PRESENTATION OF MULTIPLE DEPENDENT CLAIM (37 CFR 1.16(j))							OR		
						TOTAL ADD'L FEE		OR	TOTAL ADD'L FEE	

		(Column 1) CLAIMS REMAINING AFTER AMENDMENT		(Column 2) HIGHEST NUMBER PREVIOUSLY PAID FOR	(Column 3) PRESENT EXTRA	RATE($)	ADDITIONAL FEE($)	OR	RATE($)	ADDITIONAL FEE($)
AMENDMENT B	Total (37 CFR 1.16(i))	*	Minus	**	=	x =		OR	x =	
AMENDMENT B	Independent (37 CFR 1.16(h))	*	Minus	***	=	x =		OR	x =	
AMENDMENT B	Application Size Fee (37 CFR 1.16(s))									
AMENDMENT B	FIRST PRESENTATION OF MULTIPLE DEPENDENT CLAIM (37 CFR 1.16(j))							OR		
						TOTAL ADD'L FEE		OR	TOTAL ADD'L FEE	

* If the entry in column 1 is less than the entry in column 2, write "0" in column 3.
** If the "Highest Number Previously Paid For" IN THIS SPACE is less than 20, enter "20".
*** If the "Highest Number Previously Paid For" IN THIS SPACE is less than 3, enter "3".
The "Highest Number Previously Paid For" (Total or Independent) is the highest found in the appropriate box in column 1.

UNITED STATES PATENT AND TRADEMARK OFFICE

UNITED STATES DEPARTMENT OF COMMERCE
United States Patent and Trademark Office
Address: COMMISSIONER FOR PATENTS
P.O. Box 1450
Alexandria, Virginia 22313-1450
www.uspto.gov

APPLICATION NUMBER	FILING or 371(c) DATE	GRP ART UNIT	FIL FEE REC'D	ATTY.DOCKET.NO	TOT CLAIMS	IND CLAIMS
16/512,560	07/16/2019	2827	965	35447-43490/US	22	3

CONFIRMATION NO. 6385

FILING RECEIPT

OC000000110042988

758
FENWICK & WEST LLP
SILICON VALLEY CENTER
801 CALIFORNIA STREET
MOUNTAIN VIEW, CA 94041
UNITED STATES OF AMERICA

Date Mailed: 07/31/2019

Receipt is acknowledged of this non-provisional utility patent application. The application will be taken up for examination in due course. Applicant will be notified as to the results of the examination. Any correspondence concerning the application must include the following identification information: the U.S. APPLICATION NUMBER, FILING DATE, NAME OF FIRST INVENTOR, and TITLE OF INVENTION. Fees transmitted by check or draft are subject to collection.

Please verify the accuracy of the data presented on this receipt. If an error is noted on this Filing Receipt, please submit a written request for a corrected Filing Receipt, including a properly marked-up ADS showing the changes with strike-through for deletions and underlining for additions. If you received a "Notice to File Missing Parts" or other Notice requiring a response for this application, please submit any request for correction to this Filing Receipt with your reply to the Notice. When the USPTO processes the reply to the Notice, the USPTO will generate another Filing Receipt incorporating the requested corrections provided that the request is grantable.

Inventor(s)

Samuel English Anthony, Cambridge, MA;
Kshitij Misra, Cambridge, MA;
Avery Wagner Faller, Cambridge, MA;

Applicant(s)

Perceptive Automata Inc., Somerville, MA;

Power of Attorney: The patent practitioners associated with Customer Number 00758

Domestic Priority data as claimed by applicant

This application is a CON of 15/830,549 12/04/2017
which claims benefit of 62/528,771 07/05/2017

Foreign Applications for which priority is claimed (You may be eligible to benefit from the **Patent Prosecution Highway** program at the USPTO. Please see http://www.uspto.gov for more information.) - None.
Foreign application information must be provided in an Application Data Sheet in order to constitute a claim to foreign priority. See 37 CFR 1.55 and 1.76.

Permission to Access Application via Priority Document Exchange: Yes

Permission to Access Search Results: Yes

Applicant may provide or rescind an authorization for access using Form PTO/SB/39 or Form PTO/SB/69 as appropriate.

If Required, Foreign Filing License Granted: 07/30/2019

The country code and number of your priority application, to be used for filing abroad under the Paris Convention, is **US 16/512,560**

Projected Publication Date: 11/07/2019

Non-Publication Request: No

Early Publication Request: No
**** SMALL ENTITY ****
Title

SYSTEM AND METHOD OF PREDICTING HUMAN INTERACTION WITH VEHICLES

Preliminary Class

365

Statement under 37 CFR 1.55 or 1.78 for AIA (First Inventor to File) Transition Applications: No

PROTECTING YOUR INVENTION OUTSIDE THE UNITED STATES

Since the rights granted by a U.S. patent extend only throughout the territory of the United States and have no effect in a foreign country, an inventor who wishes patent protection in another country must apply for a patent in a specific country or in regional patent offices. Applicants may wish to consider the filing of an international application under the Patent Cooperation Treaty (PCT). An international (PCT) application generally has the same effect as a regular national patent application in each PCT-member country. The PCT process **simplifies** the filing of patent applications on the same invention in member countries, but **does not result** in a grant of "an international patent" and does not eliminate the need of applicants to file additional documents and fees in countries where patent protection is desired.

Almost every country has its own patent law, and a person desiring a patent in a particular country must make an application for patent in that country in accordance with its particular laws. Since the laws of many countries differ in various respects from the patent law of the United States, applicants are advised to seek guidance from specific foreign countries to ensure that patent rights are not lost prematurely.

Applicants also are advised that in the case of inventions made in the United States, the Director of the USPTO must issue a license before applicants can apply for a patent in a foreign country. The filing of a U.S. patent application serves as a request for a foreign filing license. The application's filing receipt contains further information and guidance as to the status of applicant's license for foreign filing.

Applicants may wish to consult the USPTO booklet, "General Information Concerning Patents" (specifically, the section entitled "Treaties and Foreign Patents") for more information on timeframes and deadlines for filing foreign patent applications. The guide is available either by contacting the USPTO Contact Center at 800-786-9199, or it can be viewed on the USPTO website at http://www.uspto.gov/web/offices/pac/doc/general/index.html.

For information on preventing theft of your intellectual property (patents, trademarks and copyrights), you may wish to consult the U.S. Government website, http://www.stopfakes.gov. Part of a Department of Commerce initiative, this website includes self-help "toolkits" giving innovators guidance on how to protect intellectual property in specific

countries such as China, Korea and Mexico. For questions regarding patent enforcement issues, applicants may call the U.S. Government hotline at 1-866-999-HALT (1-866-999-4258).

LICENSE FOR FOREIGN FILING UNDER

Title 35, United States Code, Section 184

Title 37, Code of Federal Regulations, 5.11 & 5.15

GRANTED

The applicant has been granted a license under 35 U.S.C. 184, if the phrase "IF REQUIRED, FOREIGN FILING LICENSE GRANTED" followed by a date appears on this form. Such licenses are issued in all applications where the conditions for issuance of a license have been met, regardless of whether or not a license may be required as set forth in 37 CFR 5.15. The scope and limitations of this license are set forth in 37 CFR 5.15(a) unless an earlier license has been issued under 37 CFR 5.15(b). The license is subject to revocation upon written notification. The date indicated is the effective date of the license, unless an earlier license of similar scope has been granted under 37 CFR 5.13 or 5.14.

This license is to be retained by the licensee and may be used at any time on or after the effective date thereof unless it is revoked. This license is automatically transferred to any related applications(s) filed under 37 CFR 1.53(d). This license is not retroactive.

The grant of a license does not in any way lessen the responsibility of a licensee for the security of the subject matter as imposed by any Government contract or the provisions of existing laws relating to espionage and the national security or the export of technical data. Licensees should apprise themselves of current regulations especially with respect to certain countries, of other agencies, particularly the Office of Defense Trade Controls, Department of State (with respect to Arms, Munitions and Implements of War (22 CFR 121-128)); the Bureau of Industry and Security, Department of Commerce (15 CFR parts 730-774); the Office of Foreign AssetsControl, Department of Treasury (31 CFR Parts 500+) and the Department of Energy.

NOT GRANTED

No license under 35 U.S.C. 184 has been granted at this time, if the phrase "IF REQUIRED, FOREIGN FILING LICENSE GRANTED" DOES NOT appear on this form. Applicant may still petition for a license under 37 CFR 5.12, if a license is desired before the expiration of 6 months from the filing date of the application. If 6 months has lapsed from the filing date of this application and the licensee has not received any indication of a secrecy order under 35 U.S.C. 181, the licensee may foreign file the application pursuant to 37 CFR 5.15(b).

SelectUSA

The United States represents the largest, most dynamic marketplace in the world and is an unparalleled location for business investment, innovation, and commercialization of new technologies. The U.S. offers tremendous resources and advantages for those who invest and manufacture goods here. Through SelectUSA, our nation works to promote and facilitate business investment. SelectUSA provides information assistance to the international investor community; serves as an ombudsman for existing and potential investors; advocates on behalf of U.S. cities, states, and regions competing for global investment; and counsels U.S. economic development organizations on investment attraction best practices. To learn more about why the United States is the best country in the world to develop

technology, manufacture products, deliver services, and grow your business, visit http://www.SelectUSA.gov or call +1-202-482-6800.

UNITED STATES PATENT AND TRADEMARK OFFICE

UNITED STATES DEPARTMENT OF COMMERCE
United States Patent and Trademark Office
Address: COMMISSIONER FOR PATENTS
P.O. Box 1450
Alexandria, Virginia 22313-1450
www.uspto.gov

APPLICATION NUMBER	FILING OR 371(C) DATE	FIRST NAMED APPLICANT	ATTY. DOCKET NO./TITLE
16/512,560	07/16/2019	Samuel English Anthony	35447-43490/US

CONFIRMATION NO. 6385

INFORMAL NOTICE

758
FENWICK & WEST LLP
SILICON VALLEY CENTER
801 CALIFORNIA STREET
MOUNTAIN VIEW, CA 94041
UNITED STATES OF AMERICA

OC000000110042989

Date Mailed: 07/31/2019

INFORMATIONAL NOTICE TO APPLICANT

Applicant is notified that the above-identified application contains the deficiencies noted below. No period for reply is set forth in this notice for correction of these deficiencies. However, if a deficiency relates to the inventor's oath or declaration, the applicant must file an oath or declaration in compliance with 37 CFR 1.63, or a substitute statement in compliance with 37 CFR 1.64, executed by or with respect to each actual inventor no later than the expiration of the time period set in the "Notice of Allowability" to avoid abandonment. See 37 CFR 1.53(f).

The item(s) indicated below are also required and should be submitted with any reply to this notice to avoid further processing delays.

- A properly executed inventor's oath or declaration has not been received for the following inventor(s):
  Samuel English Anthony
  Kshitij Misra
  Avery Wagner Faller

Questions about the contents of this notice and the requirements it sets forth should be directed to the Office of Data Management, Application Assistance Unit, at **(571) 272-4000** or **(571) 272-4200** or **1-888-786-0101**.

/amanalac/

IN THE UNITED STATES
PATENT AND TRADEMARK OFFICE

INVENTORS:	Samuel English Anthony, et al.
APPLICATION NO.:	16/512,560
FILING DATE:	July 16, 2019
TITLE:	System and Method of Predicting Human Interaction with Vehicles
EXAMINER:	Not yet assigned
GROUP ART UNIT:	2827
ATTY. DKT. NO.:	35447-43490/US

REQUEST TO CORRECT NAME OF APPLICANT PURSUANT TO 37 CFR § 1.46(c)

Pursuant to 37 C.F.R. §1.46(c), please correct name of the Applicant for this application as follows:

- Original listed Applicant Name: Perceptive Automata Inc.
- Correct Applicant Name: Perceptive Automata, Inc.

Please find enclosed:

- A newly-executed, corrected Application Data Sheet (ADS) that identifies the new Applicant; and
- A power of attorney executed by the Applicant.

Please charge any applicable charges or fees associated with this request to Deposit Account No. 19-2555.

Respectfully submitted,

Dated: August 1, 2019

/ Rajendra B. Panwar/

Rajendra B. Panwar, Reg. No. 63,165
FENWICK & WEST LLP
801 California Street
Mountain View, CA 94041
Phone: (650) 335-7107
Fax: (650) 938-5200
Email: rpanwar@fenwick.com

PTO/AIA/82A (07-13)
Approved for use through 01/31/2018. OMB 0651-0035
U.S. Patent and Trademark Office; U.S. DEPARTMENT OF COMMERCE
Under the Paperwork Reduction Act of 1995, no persons are required to respond to a collection of information unless it displays a valid OMB control number.

TRANSMITTAL FOR POWER OF ATTORNEY TO ONE OR MORE REGISTERED PRACTITIONERS

NOTE: This form is to be submitted with the Power of Attorney by Applicant form (PTO/AIA/82B) to identify the application to which the Power of Attorney is directed, in accordance with 37 CFR 1.5, unless the application number and filing date are identified in the Power of Attorney by Applicant form. If neither form PTO/AIA/82A nor form PTO/AIA82B identifies the application to which the Power of Attorney is directed, the Power of Attorney will not be recognized in the application.

Application Number	Not yet assigned
Filing Date	Herewith
First Named Inventor	Samuel English Anthony
Title	SYSTEM AND METHOD OF PREDICTING HUMAN INTERACTION WITH VEHICLES
Art Unit	Not yet assigned
Examiner Name	Not yet assigned
Attorney Docket Number	35447-43490/US

SIGNATURE of Applicant or Patent Practitioner

Signature	/Rajendra B. Panwar/	Date (Optional)	August 1, 2019
Name	Rajendra B. Panwar	Registration Number	63,165
Title (if Applicant is a juristic entity)	Attorney for Applicant		
Applicant Name (if Applicant is a juristic entity)	Perceptive Automata, Inc.		

NOTE: This form must be signed in accordance with 37 CFR 1.33. See 37 CFR 1.4(d) for signature requirements and certifications. If more than one applicant, use multiple forms.

☑ *Total of 1 forms are submitted.

This collection of information is required by 37 CFR 1.131, 1.32, and 1.33. The information is required to obtain or retain a benefit by the public which is to file (and by the USPTO to process) an application. Confidentiality is governed by 35 U.S.C. 122 and 37 CFR 1.11 and 1.14. This collection is estimated to take 3 minutes to complete, including gathering, preparing, and submitting the completed application form to the USPTO. Time will vary depending upon the individual case. Any comments on the amount of time you require to complete this form and/or suggestions for reducing this burden, should be sent to the Chief Information Officer, U.S. Patent and Trademark Office, U.S. Department of Commerce, P.O. Box 1450, Alexandria, VA 22313-1450. DO NOT SEND FEES OR COMPLETED FORMS TO THIS ADDRESS. **SEND TO: Commissioner for Patents, P.O. Box 1450, Alexandria, VA 22313-1450.**

If you need assistance in completing the form, call 1-800-PTO-9199 and select option 2.

Doc Code: PA..
Document Description: Power of Attorney

PTO/AIA/82B (07-13)
Approved for use through 01/31/2018. OMB 0651-0035
U.S. Patent and Trademark Office; U.S. DEPARTMENT OF COMMERCE
Under the Paperwork Reduction Act of 1995, no persons are required to respond to a collection of information unless it displays a valid OMB control number

POWER OF ATTORNEY BY APPLICANT

I hereby revoke all previous powers of attorney given in the application identified in either the attached transmittal letter or the boxes below.

Application Number	Filing Date

(Note: The boxes above may be left blank if information is provided on form PTO/AIA/82A.)

☑ I hereby appoint the Patent Practitioner(s) associated with the following Customer Number as my/our attorney(s) or agent(s), and to transact all business in the United States Patent and Trademark Office connected therewith for the application referenced in the attached transmittal letter (form PTO/AIA/82A) or identified above: 00758

OR

☐ I hereby appoint Practitioner(s) named in the attached list (form PTO/AIA/82C) as my/our attorney(s) or agent(s), and to transact all business in the United States Patent and Trademark Office connected therewith for the patent application referenced in the attached transmittal letter (form PTO/AIA/82A) or identified above. (Note: Complete form PTO/AIA/82C.)

Please recognize or change the correspondence address for the application identified in the attached transmittal letter or the boxes above to:

☑ The address associated with the above-mentioned Customer Number

OR

☐ The address associated with Customer Number:

OR

☐ Firm or Individual Name					
Address					
City		State		Zip	
Country					
Telephone		Email			

I am the Applicant (if the Applicant is a juristic entity, list the Applicant name in the box):

PERCEPTIVE AUTOMATA, INC.

☐ Inventor or Joint Inventor (title not required below)

☐ Legal Representative of a Deceased or Legally Incapacitated Inventor (title not required below)

☑ Assignee or Person to Whom the Inventor is Under an Obligation to Assign (provide signer's title if applicant is a juristic entity)

☐ Person Who Otherwise Shows Sufficient Proprietary Interest (e.g., a petition under 37 CFR 1.46(b)(2) was granted in the application or is concurrently being filed with this document) (provide signer's title if applicant is a juristic entity)

SIGNATURE of Applicant for Patent

The undersigned (whose title is supplied below) is authorized to act on behalf of the applicant (e.g., where the applicant is a juristic entity).

Signature		Date (Optional)	
Name	Kshitij "Sid" Misra		
Title	Chief Executive Officer		

NOTE: Signature - This form must be signed by the applicant in accordance with 37 CFR 1.33. See 37 CFR 1.4 for signature requirements and certifications. If more than one applicant, use multiple forms.

☑ Total of 1 forms are submitted.

This collection of information is required by 37 CFR 1.131, 1.32, and 1.33. The information is required to obtain or retain a benefit by the public which is to file (and by the USPTO to process) an application. Confidentiality is governed by 35 U.S.C. 122 and 37 CFR 1.11 and 1.14. This collection is estimated to take 3 minutes to complete, including gathering, preparing, and submitting the completed application form to the USPTO. Time will vary depending upon the individual case. Any comments on the amount of time you require to complete this form and/or suggestions for reducing this burden, should be sent to the Chief Information Officer, U.S. Patent and Trademark Office, U.S. Department of Commerce, P.O. Box 1450, Alexandria, VA 22313-1450. DO NOT SEND FEES OR COMPLETED FORMS TO THIS ADDRESS. **SEND TO: Commissioner for Patents, P.O. Box 1450, Alexandria, VA 22313-1450.**

If you need assistance in completing the form, call 1-800-PTO-9199 and select option 2.

PTO/AIA/14 (02-18)
Approved for use through 11/30/2020. OMB 0651-0032
U.S. Patent and Trademark Office; U.S. DEPARTMENT OF COMMERCE

Under the Paperwork Reduction Act of 1995, no persons are required to respond to a collection of information unless it contains a valid OMB control number.

Application Data Sheet 37 CFR 1.76	Attorney Docket Number	35447-43490/US
	Application Number	16/512,560
Title of Invention	SYSTEM AND METHOD OF PREDICTING HUMAN INTERACTION WITH VEHICLES	

The application data sheet is part of the provisional or nonprovisional application for which it is being submitted. The following form contains the bibliographic data arranged in a format specified by the United States Patent and Trademark Office as outlined in 37 CFR 1.76.
This document may be completed electronically and submitted to the Office in electronic format using the Electronic Filing System (EFS) or the document may be printed and included in a paper filed application.

Secrecy Order 37 CFR 5.2:

☐ Portions or all of the application associated with this Application Data Sheet may fall under a Secrecy Order pursuant to 37 CFR 5.2 (Paper filers only. Applications that fall under Secrecy Order may not be filed electronically.)

Inventor Information:

Inventor 1 Remove

Legal Name

Prefix	Given Name	Middle Name	Family Name	Suffix
	Samuel	English	Anthony	

Residence Information (Select One) ◉ US Residency ◯ Non US Residency ◯ Active US Military Service

City	Cambridge	State/Province	MA	Country of Residence	US

Mailing Address of Inventor:

Address 1	Perceptive Automata, Inc.		
Address 2	230 Somerville Ave		
City	Somerville	State/Province	MA
Postal Code	02143	Country	US

Inventor 2 Remove

Legal Name

Prefix	Given Name	Middle Name	Family Name	Suffix
	Kshitij		Misra	

Residence Information (Select One) ◉ US Residency ◯ Non US Residency ◯ Active US Military Service

City	Cambridge	State/Province	MA	Country of Residence	US

Mailing Address of Inventor:

Address 1	Perceptive Automata, Inc.		
Address 2	230 Somerville Ave		
City	Somerville	State/Province	MA
Postal Code	02143	Country	US

Inventor 3 Remove

Legal Name

Prefix	Given Name	Middle Name	Family Name	Suffix
	Avery	Wagner	Faller	

Residence Information (Select One) ◉ US Residency ◯ Non US Residency ◯ Active US Military Service

Under the Paperwork Reduction Act of 1995, no persons are required to respond to a collection of information unless it contains a valid OMB control number.

Application Data Sheet 37 CFR 1.76	Attorney Docket Number	35447-43490/US
	Application Number	
Title of Invention	SYSTEM AND METHOD OF PREDICTING HUMAN INTERACTION WITH VEHICLES	

City	Cambridge	State/Province	MA	Country of Residence	US

Mailing Address of Inventor:

Address 1	Perceptive Automata, Inc.		
Address 2	230 Somerville Ave		
City	Somerville	**State/Province**	MA
Postal Code	02143	**Country**	US

All Inventors Must Be Listed - Additional Inventor Information blocks may be generated within this form by selecting the **Add** button. Add

Correspondence Information:

Enter either Customer Number or complete the Correspondence Information section below. For further information see 37 CFR 1.33(a).

☐ **An Address is being provided for the correspondence Information of this application.**

Customer Number	00758		
Email Address	ptoc@fenwick.com	Add Email	Remove Email

Application Information:

Title of the Invention	SYSTEM AND METHOD OF PREDICTING HUMAN INTERACTION WITH VEHICLES		
Attorney Docket Number	35447-43490/US	**Small Entity Status Claimed**	☒
Application Type	Nonprovisional		
Subject Matter	Utility		
Total Number of Drawing Sheets (if any)	11	**Suggested Figure for Publication (if any)**	

Filing By Reference:

Only complete this section when filing an application by reference under 35 U.S.C. 111(c) and 37 CFR 1.57(a). Do not complete this section if application papers including a specification and any drawings are being filed. Any domestic benefit or foreign priority information must be provided in the appropriate section(s) below (i.e., "Domestic Benefit/National Stage Information" and "Foreign Priority Information").

For the purposes of a filing date under 37 CFR 1.53(b), the description and any drawings of the present application are replaced by this reference to the previously filed application, subject to conditions and requirements of 37 CFR 1.57(a).

Application number of the previously filed application	Filing date (YYYY-MM-DD)	Intellectual Property Authority or Country

Publication Information:

☐ Request Early Publication (Fee required at time of Request 37 CFR 1.219)

☐ **Request Not to Publish.** I hereby request that the attached application not be published under 35 U.S.C. 122(b) and certify that the invention disclosed in the attached application **has not and will not** be the subject of an application filed in another country, or under a multilateral international agreement, that requires publication at eighteen months after filing.

Under the Paperwork Reduction Act of 1995, no persons are required to respond to a collection of information unless it contains a valid OMB control number.

Application Data Sheet 37 CFR 1.76	Attorney Docket Number	35447-43490/US
	Application Number	
Title of Invention	SYSTEM AND METHOD OF PREDICTING HUMAN INTERACTION WITH VEHICLES	

Representative Information:

Representative information should be provided for all practitioners having a power of attorney in the application. Providing this information in the Application Data Sheet does not constitute a power of attorney in the application (see 37 CFR 1.32).
Either enter Customer Number or complete the Representative Name section below. If both sections are completed the customer Number will be used for the Representative Information during processing.

Please Select One:	◉ Customer Number	◯ US Patent Practitioner	◯ Limited Recognition (37 CFR 11.9)
Customer Number	00758		

Domestic Benefit/National Stage Information:

This section allows for the applicant to either claim benefit under 35 U.S.C. 119(e), 120, 121, 365(c), or 386(c) or indicate National Stage entry from a PCT application. Providing benefit claim information in the Application Data Sheet constitutes the specific reference required by 35 U.S.C. 119(e) or 120, and 37 CFR 1.78.
When referring to the current application, please leave the "Application Number" field blank.

Prior Application Status	Pending		Remove
Application Number	Continuity Type	Prior Application Number	Filing or 371(c) Date (YYYY-MM-DD)
	Continuation of	15830549	2017-12-04
Prior Application Status	Expired		Remove
Application Number	Continuity Type	Prior Application Number	Filing or 371(c) Date (YYYY-MM-DD)
15830549	Claims benefit of provisional	62528771	2017-07-05

Additional Domestic Benefit/National Stage Data may be generated within this form by selecting the **Add** button.

Foreign Priority Information:

This section allows for the applicant to claim priority to a foreign application. Providing this information in the application data sheet constitutes the claim for priority as required by 35 U.S.C. 119(b) and 37 CFR 1.55. When priority is claimed to a foreign application that is eligible for retrieval under the priority document exchange program (PDX)[i] the information will be used by the Office to automatically attempt retrieval pursuant to 37 CFR 1.55(i)(1) and (2). Under the PDX program, applicant bears the ultimate responsibility for ensuring that a copy of the foreign application is received by the Office from the participating foreign intellectual property office, or a certified copy of the foreign priority application is filed, within the time period specified in 37 CFR 1.55(g)(1).

Under the Paperwork Reduction Act of 1995, no persons are required to respond to a collection of information unless it contains a valid OMB control number.

Application Data Sheet 37 CFR 1.76	Attorney Docket Number	35447-43490/US
	Application Number	
Title of Invention	SYSTEM AND METHOD OF PREDICTING HUMAN INTERACTION WITH VEHICLES	

Application Number	Country[i]	Filing Date (YYYY-MM-DD)	Remove Access Code[i] (if applicable)
Additional Foreign Priority Data may be generated within this form by selecting the **Add** button.			

Statement under 37 CFR 1.55 or 1.78 for AIA (First Inventor to File) Transition Applications

☐ This application (1) claims priority to or the benefit of an application filed before March 16, 2013 and (2) also contains, or contained at any time, a claim to a claimed invention that has an effective filing date on or after March 16, 2013.
NOTE: By providing this statement under 37 CFR 1.55 or 1.78, this application, with a filing date on or after March 16, 2013, will be examined under the first inventor to file provisions of the AIA.

Under the Paperwork Reduction Act of 1995, no persons are required to respond to a collection of information unless it contains a valid OMB control number.

Application Data Sheet 37 CFR 1.76	Attorney Docket Number	35447-43490/US
	Application Number	
Title of Invention	SYSTEM AND METHOD OF PREDICTING HUMAN INTERACTION WITH VEHICLES	

Authorization or Opt-Out of Authorization to Permit Access:

When this Application Data Sheet is properly signed and filed with the application, applicant has provided written authority to permit a participating foreign intellectual property (IP) office access to the instant application-as-filed (see paragraph A in subsection 1 below) and the European Patent Office (EPO) access to any search results from the instant application (see paragraph B in subsection 1 below).

Should applicant choose not to provide an authorization identified in subsection 1 below, applicant **must opt-out** of the authorization by checking the corresponding box A or B or both in subsection 2 below.

NOTE: This section of the Application Data Sheet is **ONLY** reviewed and processed with the **INITIAL** filing of an application. After the initial filing of an application, an Application Data Sheet cannot be used to provide or rescind authorization for access by a foreign IP office(s). Instead, Form PTO/SB/39 or PTO/SB/69 must be used as appropriate.

1. Authorization to Permit Access by a Foreign Intellectual Property Office(s)

A. Priority Document Exchange (PDX) - Unless box A in subsection 2 (opt-out of authorization) is checked, the undersigned hereby **grants the USPTO authority** to provide the European Patent Office (EPO), the Japan Patent Office (JPO), the Korean Intellectual Property Office (KIPO), the State Intellectual Property Office of the People's Republic of China (SIPO), the World Intellectual Property Organization (WIPO), and any other foreign intellectual property office participating with the USPTO in a bilateral or multilateral priority document exchange agreement in which a foreign application claiming priority to the instant patent application is filed, access to: (1) the instant patent application-as-filed and its related bibliographic data, (2) any foreign or domestic application to which priority or benefit is claimed by the instant application and its related bibliographic data, and (3) the date of filing of this Authorization. See 37 CFR 1.14(h)(1).

B. Search Results from U.S. Application to EPO - Unless box B in subsection 2 (opt-out of authorization) is checked, the undersigned hereby **grants the USPTO authority** to provide the EPO access to the bibliographic data and search results from the instant patent application when a European patent application claiming priority to the instant patent application is filed. See 37 CFR 1.14(h)(2).

The applicant is reminded that the EPO's Rule 141(1) EPC (European Patent Convention) requires applicants to submit a copy of search results from the instant application without delay in a European patent application that claims priority to the instant application.

2. Opt-Out of Authorizations to Permit Access by a Foreign Intellectual Property Office(s)

☐ A. Applicant **DOES NOT** authorize the USPTO to permit a participating foreign IP office access to the instant application-as-filed. If this box is checked, the USPTO will not be providing a participating foreign IP office with any documents and information identified in subsection 1A above.

☐ B. Applicant **DOES NOT** authorize the USPTO to transmit to the EPO any search results from the instant patent application. If this box is checked, the USPTO will not be providing the EPO with search results from the instant application.

NOTE: Once the application has published or is otherwise publicly available, the USPTO may provide access to the application in accordance with 37 CFR 1.14.

Under the Paperwork Reduction Act of 1995, no persons are required to respond to a collection of information unless it contains a valid OMB control number.

Application Data Sheet 37 CFR 1.76	Attorney Docket Number	35447-43490/US
	Application Number	
Title of Invention	SYSTEM AND METHOD OF PREDICTING HUMAN INTERACTION WITH VEHICLES	

Applicant Information:

Providing assignment information in this section does not substitute for compliance with any requirement of part 3 of Title 37 of CFR to have an assignment recorded by the Office.

Applicant 1

If the applicant is the inventor (or the remaining joint inventor or inventors under 37 CFR 1.45), this section should not be completed. The information to be provided in this section is the name and address of the legal representative who is the applicant under 37 CFR 1.43; or the name and address of the assignee, person to whom the inventor is under an obligation to assign the invention, or person who otherwise shows sufficient proprietary interest in the matter who is the applicant under 37 CFR 1.46. If the applicant is an applicant under 37 CFR 1.46 (assignee, person to whom the inventor is obligated to assign, or person who otherwise shows sufficient proprietary interest) together with one or more joint inventors, then the joint inventor or inventors who are also the applicant should be identified in this section.

Clear

◉ Assignee	◯ Legal Representative under 35 U.S.C. 117	◯ Joint Inventor
◯ Person to whom the inventor is obligated to assign.	◯ Person who shows sufficient proprietary interest	

If applicant is the legal representative, indicate the authority to file the patent application, the inventor is:

Name of the Deceased or Legally Incapacitated Inventor:

If the Applicant is an Organization check here. ☒

Organization Name ~~Perceptive Automata Inc.~~ Perceptive Automata, Inc.

Mailing Address Information For Applicant:

Address 1	230 Somerville Ave		
Address 2			
City	Somerville	**State/Province**	MA
Country	US	Postal Code	02143
Phone Number		Fax Number	
Email Address			

Additional Applicant Data may be generated within this form by selecting the Add button.

Assignee Information including Non-Applicant Assignee Information:

Providing assignment information in this section does not substitute for compliance with any requirement of part 3 of Title 37 of CFR to have an assignment recorded by the Office.

Under the Paperwork Reduction Act of 1995, no persons are required to respond to a collection of information unless it contains a valid OMB control number.

Application Data Sheet 37 CFR 1.76	Attorney Docket Number	35447-43490/US
	Application Number	
Title of Invention	SYSTEM AND METHOD OF PREDICTING HUMAN INTERACTION WITH VEHICLES	

Assignee 1

Complete this section if assignee information, including non-applicant assignee information, is desired to be included on the patent application publication. An assignee-applicant identified in the "Applicant Information" section will appear on the patent application publication as an applicant. For an assignee-applicant, complete this section only if identification as an assignee is also desired on the patent application publication.

If the Assignee or Non-Applicant Assignee is an Organization check here. ☐

Prefix	**Given Name**	Middle Name	**Family Name**	Suffix

Mailing Address Information For Assignee including Non-Applicant Assignee:

Address 1			
Address 2			
City		**State/Province**	
Country		Postal Code	
Phone Number		Fax Number	
Email Address			

Additional Assignee or Non-Applicant Assignee Data may be generated within this form by selecting the Add button.

Signature:

NOTE: This Application Data Sheet must be signed in accordance with 37 CFR 1.33(b). **However, if this Application Data Sheet is submitted with the INITIAL filing of the application and either box A or B is not checked in subsection 2 of the "Authorization or Opt-Out of Authorization to Permit Access" section, then this form must also be signed in accordance with 37 CFR 1.14(c).**

This Application Data Sheet **must** be signed by a patent practitioner if one or more of the applicants is a **juristic entity** (e.g., corporation or association). If the applicant is two or more joint inventors, this form must be signed by a patent practitioner, **all** joint inventors who are the applicant, or one or more joint inventor-applicants who have been given power of attorney (e.g., see USPTO Form PTO/AIA/81) on behalf of **all** joint inventor-applicants.

See 37 CFR 1.4(d) for the manner of making signatures and certifications.

Signature	/Rajendra Panwar/			Date (YYYY-MM-DD)	2019-08-01
First Name	Rajendra B.	Last Name	Panwar	Registration Number	63165

Additional Signature may be generated within this form by selecting the Add button.

Under the Paperwork Reduction Act of 1995, no persons are required to respond to a collection of information unless it contains a valid OMB control number.

Application Data Sheet 37 CFR 1.76	Attorney Docket Number	35447-43490/US
	Application Number	
Title of Invention	SYSTEM AND METHOD OF PREDICTING HUMAN INTERACTION WITH VEHICLES	

This collection of information is required by 37 CFR 1.76. The information is required to obtain or retain a benefit by the public which is to file (and by the USPTO to process) an application. Confidentiality is governed by 35 U.S.C. 122 and 37 CFR 1.14. This collection is estimated to take 23 minutes to complete, including gathering, preparing, and submitting the completed application data sheet form to the USPTO. Time will vary depending upon the individual case. Any comments on the amount of time you require to complete this form and/or suggestions for reducing this burden, should be sent to the Chief Information Officer, U.S. Patent and Trademark Office, U.S. Department of Commerce, P.O. Box 1450, Alexandria, VA 22313-1450. DO NOT SEND FEES OR COMPLETED FORMS TO THIS ADDRESS. **SEND TO: Commissioner for Patents, P.O. Box 1450, Alexandria, VA 22313-1450.**

Privacy Act Statement

The Privacy Act of 1974 (P.L. 93-579) requires that you be given certain information in connection with your submission of the attached form related to a patent application or patent. Accordingly, pursuant to the requirements of the Act, please be advised that: (1) the general authority for the collection of this information is 35 U.S.C. 2(b)(2); (2) furnishing of the information solicited is voluntary; and (3) the principal purpose for which the information is used by the U.S. Patent and Trademark Office is to process and/or examine your submission related to a patent application or patent. If you do not furnish the requested information, the U.S. Patent and Trademark Office may not be able to process and/or examine your submission, which may result in termination of proceedings or abandonment of the application or expiration of the patent.

The information provided by you in this form will be subject to the following routine uses:

1 The information on this form will be treated confidentially to the extent allowed under the Freedom of Information Act (5 U.S.C. 552) and the Privacy Act (5 U.S.C. 552a). Records from this system of records may be disclosed to the Department of Justice to determine whether the Freedom of Information Act requires disclosure of these records.

2. A record from this system of records may be disclosed, as a routine use, in the course of presenting evidence to a court, magistrate, or administrative tribunal, including disclosures to opposing counsel in the course of settlement negotiations.

3 A record in this system of records may be disclosed, as a routine use, to a Member of Congress submitting a request involving an individual, to whom the record pertains, when the individual has requested assistance from the Member with respect to the subject matter of the record.

4. A record in this system of records may be disclosed, as a routine use, to a contractor of the Agency having need for the information in order to perform a contract. Recipients of information shall be required to comply with the requirements of the Privacy Act of 1974, as amended, pursuant to 5 U.S.C. 552a(m).

5. A record related to an International Application filed under the Patent Cooperation Treaty in this system of records may be disclosed, as a routine use, to the International Bureau of the World Intellectual Property Organization, pursuant to the Patent CooperationTreaty.

6. A record in this system of records may be disclosed, as a routine use, to another federal agency for purposes of National Security review (35 U.S.C. 181) and for review pursuant to the Atomic Energy Act (42 U.S.C. 218(c)).

7. A record from this system of records may be disclosed, as a routine use, to the Administrator, General Services, or his/her designee, during an inspection of records conducted by GSA as part of that agency's responsibility to recommend improvements in records management practices and programs, under authority of 44 U.S.C. 2904 and 2906. Such disclosure shall be made in accordance with the GSA regulations governing inspection of records for this purpose, and any other relevant (i.e., GSA or Commerce) directive. Such disclosure shall not be used to make determinations about individuals.

8. A record from this system of records may be disclosed, as a routine use, to the public after either publication of the application pursuant to 35 U.S.C. 122(b) or issuance of a patent pursuant to 35 U.S.C. 151. Further, a record may be disclosed, subject to the limitations of 37 CFR 1.14, as a routine use, to the public if the record was filed in an application which became abandoned or in which the proceedings were terminated and which application is referenced by either a published application, an application open to public inspections or an issued patent.

9. A record from this system of records may be disclosed, as a routine use, to a Federal, State, or local law enforcement agency, if the USPTO becomes aware of a violation or potential violation of law or regulation.

Electronic Acknowledgement Receipt

EFS ID:	36759635
Application Number:	16512560
International Application Number:	
Confirmation Number:	6385
Title of Invention:	SYSTEM AND METHOD OF PREDICTING HUMAN INTERACTION WITH VEHICLES
First Named Inventor/Applicant Name:	Samuel English Anthony
Customer Number:	758
Filer:	Rajendra Bhagwatisingh Panwar
Filer Authorized By:	
Attorney Docket Number:	35447-43490/US
Receipt Date:	01-AUG-2019
Filing Date:	16-JUL-2019
Time Stamp:	17:02:53
Application Type:	Utility under 35 USC 111(a)

Payment information:

Submitted with Payment	no

File Listing:

Document Number	Document Description	File Name	File Size(Bytes)/ Message Digest	Multi Part /.zip	Pages (if appl.)
1	Request for Corrected Filing Receipt	43490_REQ_APP.pdf	20977 2b979c1727b343774f9befce1434508a48a3b76e	no	2

Warnings:

Information:					
2	Power of Attorney	43490_POA.PDF	762525 bf5bee71894df98765c7bcc5ded04c269e6a97e0	no	2
Warnings:					
Information:					
3	Application Data Sheet	43490_SUPP_ADS.pdf	2452330 d004c609de7bc31da0680b0106d43c5ab889b59b	no	9
Warnings:					
Information:					
This is not an USPTO supplied ADS fillable form					
			Total Files Size (in bytes):	3235832	

This Acknowledgement Receipt evidences receipt on the noted date by the USPTO of the indicated documents, characterized by the applicant, and including page counts, where applicable. It serves as evidence of receipt similar to a Post Card, as described in MPEP 503.

<u>New Applications Under 35 U.S.C. 111</u>
If a new application is being filed and the application includes the necessary components for a filing date (see 37 CFR 1.53(b)-(d) and MPEP 506), a Filing Receipt (37 CFR 1.54) will be issued in due course and the date shown on this Acknowledgement Receipt will establish the filing date of the application.
<u>National Stage of an International Application under 35 U.S.C. 371</u>
If a timely submission to enter the national stage of an international application is compliant with the conditions of 35 U.S.C. 371 and other applicable requirements a Form PCT/DO/EO/903 indicating acceptance of the application as a national stage submission under 35 U.S.C. 371 will be issued in addition to the Filing Receipt, in due course.
<u>New International Application Filed with the USPTO as a Receiving Office</u>
If a new international application is being filed and the international application includes the necessary components for an international filing date (see PCT Article 11 and MPEP 1810), a Notification of the International Application Number and of the International Filing Date (Form PCT/RO/105) will be issued in due course, subject to prescriptions concerning national security, and the date shown on this Acknowledgement Receipt will establish the international filing date of the application.

UNITED STATES PATENT AND TRADEMARK OFFICE

UNITED STATES DEPARTMENT OF COMMERCE
United States Patent and Trademark Office
Address: COMMISSIONER FOR PATENTS
P.O. Box 1450
Alexandria, Virginia 22313-1450
www.uspto.gov

APPLICATION NUMBER	FILING OR 371(C) DATE	FIRST NAMED APPLICANT	ATTY. DOCKET NO./TITLE
16/512,560	07/16/2019	Samuel English Anthony	35447-43490/US

CONFIRMATION NO. 6385

POA ACCEPTANCE LETTER

758
FENWICK & WEST LLP
SILICON VALLEY CENTER
801 CALIFORNIA STREET
MOUNTAIN VIEW, CA 94041
UNITED STATES OF AMERICA

OC000000110143562

Date Mailed: 08/06/2019

NOTICE OF ACCEPTANCE OF POWER OF ATTORNEY

This is in response to the Power of Attorney filed 08/01/2019.

The Power of Attorney in this application is accepted. Correspondence in this application will be mailed to the above address as provided by 37 CFR 1.33.

Questions about the contents of this notice and the requirements it sets forth should be directed to the Office of Data Management, Application Assistance Unit, at **(571) 272-4000** or **(571) 272-4200** or **1-888-786-0101**.

/sstephanos/

UNITED STATES PATENT AND TRADEMARK OFFICE

UNITED STATES DEPARTMENT OF COMMERCE
United States Patent and Trademark Office
Address: COMMISSIONER FOR PATENTS
P.O. Box 1450
Alexandria, Virginia 22313-1450
www.uspto.gov

APPLICATION NUMBER	FILING or 371(c) DATE	GRP ART UNIT	FIL FEE REC'D	ATTY.DOCKET.NO	TOT CLAIMS	IND CLAIMS
16/512,560	07/16/2019	2664	965	35447-43490/US	22	3

CONFIRMATION NO. 6385

CORRECTED FILING RECEIPT

OC000000110143563

758
FENWICK & WEST LLP
SILICON VALLEY CENTER
801 CALIFORNIA STREET
MOUNTAIN VIEW, CA 94041
UNITED STATES OF AMERICA

Date Mailed: 08/06/2019

Receipt is acknowledged of this non-provisional utility patent application. The application will be taken up for examination in due course. Applicant will be notified as to the results of the examination. Any correspondence concerning the application must include the following identification information: the U.S. APPLICATION NUMBER, FILING DATE, NAME OF FIRST INVENTOR, and TITLE OF INVENTION. Fees transmitted by check or draft are subject to collection.

Please verify the accuracy of the data presented on this receipt. If an error is noted on this Filing Receipt, please submit a written request for a corrected Filing Receipt, including a properly marked-up ADS showing the changes with strike-through for deletions and underlining for additions. If you received a "Notice to File Missing Parts" or other Notice requiring a response for this application, please submit any request for correction to this Filing Receipt with your reply to the Notice. When the USPTO processes the reply to the Notice, the USPTO will generate another Filing Receipt incorporating the requested corrections provided that the request is grantable.

Inventor(s)

Samuel English Anthony, Cambridge, MA;
Kshitij Misra, Cambridge, MA;
Avery Wagner Faller, Cambridge, MA;

Applicant(s)

Perceptive Automata, Inc., Somerville, MA;

Power of Attorney: The patent practitioners associated with Customer Number 00758

Domestic Priority data as claimed by applicant

This application is a CON of 15/830,549 12/04/2017
which claims benefit of 62/528,771 07/05/2017

Foreign Applications for which priority is claimed (You may be eligible to benefit from the **Patent Prosecution Highway** program at the USPTO. Please see http://www.uspto.gov for more information.) - None.
Foreign application information must be provided in an Application Data Sheet in order to constitute a claim to foreign priority. See 37 CFR 1.55 and 1.76.

Permission to Access Application via Priority Document Exchange: Yes

Permission to Access Search Results: Yes

Applicant may provide or rescind an authorization for access using Form PTO/SB/39 or Form PTO/SB/69 as appropriate.

If Required, Foreign Filing License Granted: 07/30/2019

The country code and number of your priority application, to be used for filing abroad under the Paris Convention, is **US 16/512,560**

Projected Publication Date: 11/07/2019

Non-Publication Request: No

Early Publication Request: No
**** SMALL ENTITY ****
Title

SYSTEM AND METHOD OF PREDICTING HUMAN INTERACTION WITH VEHICLES

Preliminary Class

382

Statement under 37 CFR 1.55 or 1.78 for AIA (First Inventor to File) Transition Applications: No

PROTECTING YOUR INVENTION OUTSIDE THE UNITED STATES

Since the rights granted by a U.S. patent extend only throughout the territory of the United States and have no effect in a foreign country, an inventor who wishes patent protection in another country must apply for a patent in a specific country or in regional patent offices. Applicants may wish to consider the filing of an international application under the Patent Cooperation Treaty (PCT). An international (PCT) application generally has the same effect as a regular national patent application in each PCT-member country. The PCT process **simplifies** the filing of patent applications on the same invention in member countries, but **does not result** in a grant of "an international patent" and does not eliminate the need of applicants to file additional documents and fees in countries where patent protection is desired.

Almost every country has its own patent law, and a person desiring a patent in a particular country must make an application for patent in that country in accordance with its particular laws. Since the laws of many countries differ in various respects from the patent law of the United States, applicants are advised to seek guidance from specific foreign countries to ensure that patent rights are not lost prematurely.

Applicants also are advised that in the case of inventions made in the United States, the Director of the USPTO must issue a license before applicants can apply for a patent in a foreign country. The filing of a U.S. patent application serves as a request for a foreign filing license. The application's filing receipt contains further information and guidance as to the status of applicant's license for foreign filing.

Applicants may wish to consult the USPTO booklet, "General Information Concerning Patents" (specifically, the section entitled "Treaties and Foreign Patents") for more information on timeframes and deadlines for filing foreign patent applications. The guide is available either by contacting the USPTO Contact Center at 800-786-9199, or it can be viewed on the USPTO website at http://www.uspto.gov/web/offices/pac/doc/general/index.html.

For information on preventing theft of your intellectual property (patents, trademarks and copyrights), you may wish to consult the U.S. Government website, http://www.stopfakes.gov. Part of a Department of Commerce initiative, this website includes self-help "toolkits" giving innovators guidance on how to protect intellectual property in specific

countries such as China, Korea and Mexico. For questions regarding patent enforcement issues, applicants may call the U.S. Government hotline at 1-866-999-HALT (1-866-999-4258).

LICENSE FOR FOREIGN FILING UNDER

Title 35, United States Code, Section 184

Title 37, Code of Federal Regulations, 5.11 & 5.15

GRANTED

The applicant has been granted a license under 35 U.S.C. 184, if the phrase "IF REQUIRED, FOREIGN FILING LICENSE GRANTED" followed by a date appears on this form. Such licenses are issued in all applications where the conditions for issuance of a license have been met, regardless of whether or not a license may be required as set forth in 37 CFR 5.15. The scope and limitations of this license are set forth in 37 CFR 5.15(a) unless an earlier license has been issued under 37 CFR 5.15(b). The license is subject to revocation upon written notification. The date indicated is the effective date of the license, unless an earlier license of similar scope has been granted under 37 CFR 5.13 or 5.14.

This license is to be retained by the licensee and may be used at any time on or after the effective date thereof unless it is revoked. This license is automatically transferred to any related applications(s) filed under 37 CFR 1.53(d). This license is not retroactive.

The grant of a license does not in any way lessen the responsibility of a licensee for the security of the subject matter as imposed by any Government contract or the provisions of existing laws relating to espionage and the national security or the export of technical data. Licensees should apprise themselves of current regulations especially with respect to certain countries, of other agencies, particularly the Office of Defense Trade Controls, Department of State (with respect to Arms, Munitions and Implements of War (22 CFR 121-128)); the Bureau of Industry and Security, Department of Commerce (15 CFR parts 730-774); the Office of Foreign AssetsControl, Department of Treasury (31 CFR Parts 500+) and the Department of Energy.

NOT GRANTED

No license under 35 U.S.C. 184 has been granted at this time, if the phrase "IF REQUIRED, FOREIGN FILING LICENSE GRANTED" DOES NOT appear on this form. Applicant may still petition for a license under 37 CFR 5.12, if a license is desired before the expiration of 6 months from the filing date of the application. If 6 months has lapsed from the filing date of this application and the licensee has not received any indication of a secrecy order under 35 U.S.C. 181, the licensee may foreign file the application pursuant to 37 CFR 5.15(b).

SelectUSA

The United States represents the largest, most dynamic marketplace in the world and is an unparalleled location for business investment, innovation, and commercialization of new technologies. The U.S. offers tremendous resources and advantages for those who invest and manufacture goods here. Through SelectUSA, our nation works to promote and facilitate business investment. SelectUSA provides information assistance to the international investor community; serves as an ombudsman for existing and potential investors; advocates on behalf of U.S. cities, states, and regions competing for global investment; and counsels U.S. economic development organizations on investment attraction best practices. To learn more about why the United States is the best country in the world to develop

technology, manufacture products, deliver services, and grow your business, visit http://www.SelectUSA.gov or call +1-202-482-6800.

UNITED STATES PATENT AND TRADEMARK OFFICE

UNITED STATES DEPARTMENT OF COMMERCE
United States Patent and Trademark Office
Address: COMMISSIONER FOR PATENTS
P.O. Box 1450
Alexandria, Virginia 22313-1450
www.uspto.gov

APPLICATION NO.	FILING DATE	FIRST NAMED INVENTOR	ATTORNEY DOCKET NO.	CONFIRMATION NO.
16/512,560	07/16/2019	Samuel English Anthony	35447-43490/US	6385

758 7590 08/16/2019
FENWICK & WEST LLP
SILICON VALLEY CENTER
801 CALIFORNIA STREET
MOUNTAIN VIEW, CA 94041

EXAMINER
BAKER, CHARLOTTE M

ART UNIT	PAPER NUMBER
2664	

NOTIFICATION DATE	DELIVERY MODE
08/16/2019	ELECTRONIC

Please find below and/or attached an Office communication concerning this application or proceeding.

The time period for reply, if any, is set in the attached communication.

Notice of the Office communication was sent electronically on above-indicated "Notification Date" to the following e-mail address(es):

PTOC@Fenwick.com

Office Action Summary	Application No. 16/512,560	Applicant(s) Anthony et al.	
	Examiner CHARLOTTE M BAKER	Art Unit 2664	AIA (FITF) Status Yes

-- The MAILING DATE of this communication appears on the cover sheet with the correspondence address --

Period for Reply

A SHORTENED STATUTORY PERIOD FOR REPLY IS SET TO EXPIRE 3 MONTHS FROM THE MAILING DATE OF THIS COMMUNICATION.

- Extensions of time may be available under the provisions of 37 CFR 1.136(a). In no event, however, may a reply be timely filed after SIX (6) MONTHS from the mailing date of this communication.
- If NO period for reply is specified above, the maximum statutory period will apply and will expire SIX (6) MONTHS from the mailing date of this communication.
- Failure to reply within the set or extended period for reply will, by statute, cause the application to become ABANDONED (35 U.S.C. § 133). Any reply received by the Office later than three months after the mailing date of this communication, even if timely filed, may reduce any earned patent term adjustment. See 37 CFR 1.704(b).

Status

1)☑ Responsive to communication(s) filed on 07/16/2019.

☐ A declaration(s)/affidavit(s) under **37 CFR 1.130(b)** was/were filed on _____.

2a)☐ This action is **FINAL.** 2b) ☑ This action is non-final.

3)☐ An election was made by the applicant in response to a restriction requirement set forth during the interview on _____; the restriction requirement and election have been incorporated into this action.

4)☐ Since this application is in condition for allowance except for formal matters, prosecution as to the merits is closed in accordance with the practice under *Ex parte Quayle*, 1935 C.D. 11, 453 O.G. 213.

Disposition of Claims*

5) ☑ Claim(s) 1-22 is/are pending in the application.

5a) Of the above claim(s) _____ is/are withdrawn from consideration.

6) ☐ Claim(s) _____ is/are allowed.

7) ☑ Claim(s) 1-22 is/are rejected.

8) ☐ Claim(s) _____ is/are objected to.

9) ☐ Claim(s) _____ are subject to restriction and/or election requirement

* If any claims have been determined allowable, you may be eligible to benefit from the **Patent Prosecution Highway** program at a participating intellectual property office for the corresponding application. For more information, please see http://www.uspto.gov/patents/init_events/pph/index.jsp or send an inquiry to **PPHfeedback@uspto.gov.**

Application Papers

10)☐ The specification is objected to by the Examiner.

11)☑ The drawing(s) filed on 07/16/2019 is/are: a)☑ accepted or b)☐ objected to by the Examiner.

Applicant may not request that any objection to the drawing(s) be held in abeyance. See 37 CFR 1.85(a).

Replacement drawing sheet(s) including the correction is required if the drawing(s) is objected to. See 37 CFR 1.121(d).

Priority under 35 U.S.C. § 119

12)☐ Acknowledgment is made of a claim for foreign priority under 35 U.S.C. § 119(a)-(d) or (f).

Certified copies:

a)☐ All b)☐ Some** c)☐ None of the:

1.☐ Certified copies of the priority documents have been received.

2.☐ Certified copies of the priority documents have been received in Application No. _____.

3.☐ Copies of the certified copies of the priority documents have been received in this National Stage application from the International Bureau (PCT Rule 17.2(a)).

** See the attached detailed Office action for a list of the certified copies not received.

Attachment(s)

1) ☑ Notice of References Cited (PTO-892)

2) ☐ Information Disclosure Statement(s) (PTO/SB/08a and/or PTO/SB/08b) Paper No(s)/Mail Date _____.

3) ☐ Interview Summary (PTO-413) Paper No(s)/Mail Date _____.

4) ☐ Other: _____.

DETAILED ACTION

Notice of Pre-AIA or AIA Status

1. The present application, filed on or after March 16, 2013, is being examined under the first inventor to file provisions of the AIA.

Double Patenting

2. The nonstatutory double patenting rejection is based on a judicially created doctrine grounded in public policy (a policy reflected in the statute) so as to prevent the unjustified or improper timewise extension of the "right to exclude" granted by a patent and to prevent possible harassment by multiple assignees. A nonstatutory double patenting rejection is appropriate where the conflicting claims are not identical, but at least one examined application claim is not patentably distinct from the reference claim(s) because the examined application claim is either anticipated by, or would have been obvious over, the reference claim(s). See, e.g., *In re Berg*, 140 F.3d 1428, 46 USPQ2d 1226 (Fed. Cir. 1998); *In re Goodman*, 11 F.3d 1046, 29 USPQ2d 2010 (Fed. Cir. 1993); *In re Longi*, 759 F.2d 887, 225 USPQ 645 (Fed. Cir. 1985); *In re Van Ornum*, 686 F.2d 937, 214 USPQ 761 (CCPA 1982); *In re Vogel*, 422 F.2d 438, 164 USPQ 619 (CCPA 1970); *In re Thorington*, 418 F.2d 528, 163 USPQ 644 (CCPA 1969).

A timely filed terminal disclaimer in compliance with 37 CFR 1.321(c) or 1.321(d) may be used to overcome an actual or provisional rejection based on nonstatutory double patenting provided the reference application or patent either is shown to be commonly owned with the examined application, or claims an invention made as a result of activities undertaken within the scope of a joint research agreement. See MPEP § 717.02 for applications subject to examination under the first inventor to file provisions of the AIA as explained in MPEP § 2159. See MPEP §§ 706.02(l)(1) - 706.02(l)(3) for applications not subject to examination under the first inventor

to file provisions of the AIA. A terminal disclaimer must be signed in compliance with 37 CFR 1.321(b).

The USPTO Internet website contains terminal disclaimer forms which may be used. Please visit www.uspto.gov/patent/patents-forms. The filing date of the application in which the form is filed determines what form (e.g., PTO/SB/25, PTO/SB/26, PTO/AIA/25, or PTO/AIA/26) should be used. A web-based eTerminal Disclaimer may be filled out completely online using web-screens. An eTerminal Disclaimer that meets all requirements is auto-processed and approved immediately upon submission. For more information about eTerminal Disclaimers, refer to www.uspto.gov/patents/process/file/efs/guidance/eTD-info-I.jsp.

3. Claims 1-22 are rejected on the ground of nonstatutory double patenting as being unpatentable over claims 1-20 of U.S. Patent No. (awaiting patent number of application number 15/830,549). Although the claims at issue are not identical, they are not patentably distinct from each other because:

Current Application	Awaiting patent number of 15/830,549
Claim 1: receiving, by a computing device associated with an autonomous vehicle operating on a road, sensor data captured by a sensor installed on the autonomous vehicle, the sensor data displaying an object on the road; providing the sensor data as input to a supervised learning based model, the	**Claim 1:** receiving, by a computing device, a first at least one of an image and a video segment of a road scene, the first at least one of an image and a video segment being taken from a perspective of a participant in the road scene, the first at least one of an image and a

supervised learning based model configured to receive an input sensor data displaying a particular object on a road and predicting an output statistical summary characterizing a distribution of user responses expected to be received responsive to presenting the sensor data to a plurality of users, the user responses associated with the particular object; executing the trained supervised learning based model to generate a statistical summary data characterizing a distribution of user responses expected to be received responsive to presenting the sensor data captured by the sensor installed on the autonomous vehicle; controlling the operation of the autonomous vehicle on the road based on the generated statistical summary data.	video segment including at least one of a pedestrian, a cyclist, and a motor vehicle; generating, by the computing device, stimulus data based on the first at least one of the image and the video segment, the stimulus data comprising at least one of: the first at least one of the image and the video segment, and an altered version of the first at least one of the image and the video segment; transmitting, by the computing device, the stimulus data to a user interface; receiving, by the computing device, a plurality of response data from the user interface, the response data including user inputted data by associated with the stimulus data, the user inputted data including at least one of an action and a likelihood of the action

	corresponding to at least one of the pedestrian, the cyclist, and the motor vehicle associated with the road scene; aggregating, by the computing device, a subset of the plurality of response data corresponding to one of the first at least one of the image and the video segment to form statistical data; creating, by the computing device, a model based on the statistical data; applying, by the computing device, the model to a second at least one image or video segment; and generating, by the computing device, a prediction of user behavior in the second at least one image or video segment based on the application of the model to the second at least one image or video segment.

Current Application	Awaiting patent number of 15/830,549
Claim 19: one or more processors; and a non-transitory computer readable storage medium, storing instructions that when executed by the one or more processors, cause the one or more processors to perform steps comprising: receiving, by a computing device associated with an autonomous vehicle operating on a road, sensor data captured by a sensor installed on the autonomous vehicle, the sensor data displaying an object on the road; providing the sensor data as input to a supervised learning based model, the supervised learning based model configured to receive an input sensor data displaying a particular object on a road and predicting an output statistical summary	**Claim 11:** receive a first at least one of an image and a video segment of a road scene, the first at least one of an image and a video segment being taken from a perspective of a participant in the road scene, the first at least one of an image and a video segment including at least one of a pedestrian, a cyclist, and a motor vehicle; generate stimulus data based on the first at least one of the image and the video segment, the stimulus data comprising at least one of: the first at least one of the image and the video segment, and an altered version of the first at least one of the image and the video segment; transmit the stimulus data to a user interface;

characterizing a distribution of user responses expected to be received responsive to presenting the sensor data to a plurality of users, the user responses associated with the particular object; executing the trained supervised learning based model to generate a statistical summary data characterizing a distribution of user responses expected to be received responsive to presenting the sensor data captured by the sensor installed on the autonomous vehicle; controlling the operation of the autonomous vehicle on the road based on the generated statistical summary data.	receive a plurality of response data from the user interface, the response data including user inputted data by associated with the stimulus data, the user inputted data including at least one of an action and a likelihood of the action corresponding to at least one of the pedestrian, the cyclist, and the motor vehicle associated with the road scene; aggregate a subset of the plurality of response data corresponding to one of the first at least one of the image and the video segment to form statistical data; create a model based on the statistical data; apply the model to a second at least one image or video segment; and generate a prediction of user behavior in the second at least one image or video segment based on the application of the model to the second at least one image or video segment.

Claim 2 of the current application corresponds to claim 2 of "awaiting patent number of 15/830,549".

Claim 5 of the current application corresponds to claim 6 of "awaiting patent number of 15/830,549".

Claim 6 of the current application corresponds to claim 7 of "awaiting patent number of 15/830,549".

Allowable Subject Matter

4. Claims 1-22 would be allowed provided the double patenting rejection is overcome.

Conclusion

5. The prior art made of record and not relied upon is considered pertinent to applicant's disclosure. US 2019/0079526 A1 (Vallespi-Gonzalez et al.).

6. Any inquiry concerning this communication or earlier communications from the examiner should be directed to CHARLOTTE M BAKER whose telephone number is (571)272-7459. The examiner can normally be reached on Mon - Fri 8:00-5:00.

Examiner interviews are available via telephone, in-person, and video conferencing using a USPTO supplied web-based collaboration tool. To schedule an interview, applicant is encouraged to use the USPTO Automated Interview Request (AIR) at http://www.uspto.gov/interviewpractice.

If attempts to reach the examiner by telephone are unsuccessful, the examiner's supervisor, NAY A MAUNG can be reached on (571)272-7778. The fax phone number for the organization where this application or proceeding is assigned is 571-273-8300.

Information regarding the status of an application may be obtained from the Patent Application Information Retrieval (PAIR) system. Status information for published applications may be obtained from either Private PAIR or Public PAIR. Status information for unpublished applications is available through Private PAIR only. For more information about the PAIR system, see http://pair-direct.uspto.gov. Should you have questions on access to the Private PAIR system, contact the Electronic Business Center (EBC) at 866-217-9197 (toll-free). If you would like assistance from a USPTO Customer Service Representative or access to the automated information system, call 800-786-9199 (IN USA OR CANADA) or 571-272-1000.

/CHARLOTTE M BAKER/
Primary Examiner, Art Unit 2664

Notice of References Cited	Application/Control No. 16/512,560	Applicant(s)/Patent Under Reexamination Anthony et al.	
	Examiner CHARLOTTE M BAKER	Art Unit 2664	Page 1 of 1

U.S. PATENT DOCUMENTS

*		Document Number Country Code-Number-Kind Code	Date MM-YYYY	Name	CPC Classification	US Classification
*	A	US-20190079526-A1	03-2019	Vallespi-Gonzalez; Carlos	G05D1/0221	1/1
	B					
	C					
	D					
	E					
	F					
	G					
	H					
	I					
	J					
	K					
	L					
	M					

FOREIGN PATENT DOCUMENTS

*		Document Number Country Code-Number-Kind Code	Date MM-YYYY	Country	Name	CPC Classification
	N					
	O					
	P					
	Q					
	R					
	S					
	T					

NON-PATENT DOCUMENTS

*		Include as applicable: Author, Title Date, Publisher, Edition or Volume, Pertinent Pages)
	U	
	V	
	W	
	X	

*A copy of this reference is not being furnished with this Office action. (See MPEP § 707.05(a).)
Dates in MM-YYYY format are publication dates. Classifications may be US or foreign.

Search Notes	Application/Control No.	Applicant(s)/Patent Under Reexamination
	16/512,560	Anthony et al.
	Examiner	**Art Unit**
	CHARLOTTE M BAKER	2664

CPC - Searched*		
Symbol	**Date**	**Examiner**
G05D1/0088 OR G05D2201/0213 OR G05D1/0212 OR G05D1/0246 OR G06N20/00	08/13/2019	CMB

CPC Combination Sets - Searched*		
Symbol	**Date**	**Examiner**
G05D1/0088 OR G05D2201/0213 OR G05D1/0212 OR G05D1/0246 OR G06N20/00	08/13/2019	CMB

US Classification - Searched*			
Class	**Subclass**	**Date**	**Examiner**
382	104	08/13/2019	CMB

* See search history printout included with this form or the SEARCH NOTES box below to determine the scope of the search.

Search Notes		
Search Notes	**Date**	**Examiner**
EAST Search limited by text	08/13/2019	CMB
CPC Search limited by text	08/13/2019	CMB

Interference Search			
US Class/CPC Symbol	**US Subclass/CPC Group**	**Date**	**Examiner**

/CHARLOTTE M BAKER/ Primary Examiner, Art Unit 2664	

Index of Claims	Application/Control No.	Applicant(s)/Patent Under Reexamination
	16/512,560	Anthony et al.
	Examiner	**Art Unit**
	CHARLOTTE M BAKER	2664

✓	Rejected	-	Cancelled	N	Non-Elected	A	Appeal
=	Allowed	÷	Restricted	I	Interference	O	Objected

CLAIMS

☐ Claims renumbered in the same order as presented by applicant ☐ CPA ☐ T.D. ☐ R.1.47

CLAIM		DATE								
Final	Original	08/13/2019								
	1	✓								
	2	✓								
	3	✓								
	4	✓								
	5	✓								
	6	✓								
	7	✓								
	8	✓								
	9	✓								
	10	✓								
	11	✓								
	12	✓								
	13	✓								
	14	✓								
	15	✓								
	16	✓								
	17	✓								
	18	✓								
	19	✓								
	20	✓								
	21	✓								
	22	✓								

EAST Search History

EAST Search History (Prior Art)

Ref #	Hits	Search Query	DBs	Default Operator	Plurals	Time Stamp
L2	1555	(autonomous near2 vehicle) same (object with (road or highway or street or avenue))	US-PGPUB; USPAT; USOCR; FPRS; EPO; JPO; DERWENT; IBM_TDB	OR	ON	2019/08/13 15:14
L3	17	2 same (learning near3 model)	US-PGPUB; USPAT; USOCR; FPRS; EPO; JPO; DERWENT; IBM_TDB	OR	ON	2019/08/13 15:15
L4	0	3 same (statistic$2)	US-PGPUB; USPAT; USOCR; FPRS; EPO; JPO; DERWENT; IBM_TDB	OR	ON	2019/08/13 15:15
L5	180	2 same (model)	US-PGPUB; USPAT; USOCR; FPRS; EPO; JPO; DERWENT; IBM_TDB	OR	ON	2019/08/13 15:15
L6	0	5 same (statistic$2)	US-PGPUB; USPAT; USOCR; FPRS; EPO; JPO; DERWENT; IBM_TDB	OR	ON	2019/08/13 15:15
L7	89	5 and (statistic$2)	US-PGPUB; USPAT; USOCR; FPRS; EPO; JPO; DERWENT; IBM_TDB	OR	ON	2019/08/13 15:15
L8	8	5 and ((statistic$2) same (train$3))	US-PGPUB; USPAT; USOCR; FPRS; EPO; JPO; DERWENT; IBM_TDB	OR	ON	2019/08/13 15:16
L9	96	((autonomous near2 vehicle) same (object with (road or highway or street or avenue))) and ((statistic$2) same (train$3))	US-PGPUB; USPAT; USOCR	OR	ON	2019/08/13 16:00
L10	75	9 AND ((G05D1/0088 OR G05D2201/0213 OR G05D1/0212 OR G05D1/0246 OR G06N20/00).CPC.)	US-PGPUB; USPAT; USOCR	OR	ON	2019/08/13 16:00
S1	3	"15830549"	US-PGPUB; USPAT; USOCR; FPRS; EPO; JPO; DERWENT; IBM_TDB	OR	ON	2019/08/06 14:41

EAST Search History (Interference)

< This search history is empty>

8/13/2019 4:05:07 PM
C:\Users\cbaker\Documents\EAST\Workspaces\16512560.wsp

Bibliographic Data

Application No: 16/512,560

Foreign Priority claimed: ○ Yes ◉ No

35 USC 119 (a-d) conditions met: ☐ Yes ☑ No ☐ Met After Allowance

Verified and Acknowledged: /CHARLOTTE M BAKER/ (Examiner's Signature) CMB (Initials)

Title: SYSTEM AND METHOD OF PREDICTING HUMAN INTERACTION WITH VEHICLES

FILING or 371(c) DATE	CLASS	GROUP ART UNIT	ATTORNEY DOCKET NO.
07/16/2019	382	2664	35447-43490/US
RULE			

APPLICANTS

Perceptive Automata, Inc., Somerville, MA, UNITED STATES

INVENTORS

Samuel English Anthony Cambridge, MA, UNITED STATES

Kshitij Misra Cambridge, MA, UNITED STATES

Avery Wagner Faller Cambridge, MA, UNITED STATES

CONTINUING DATA

This application is a CON of 15830549 12/04/2017 YES CMB 08/13/2019

15830549 has PRO of 62528771 07/05/2017

FOREIGN APPLICATIONS NONE CMB 08/13/2019

IF REQUIRED, FOREIGN LICENSE GRANTED**

07/30/2019

**** SMALL ENTITY ****

STATE OR COUNTRY

UNITED STATES

ADDRESS

FENWICK & WEST LLP
SILICON VALLEY CENTER
801 CALIFORNIA STREET
MOUNTAIN VIEW, CA 94041
UNITED STATES

FILING FEE RECEIVED

$865

INFORMATION DISCLOSURE STATEMENT BY APPLICANT (Not for submission under 37 CFR 1.99)				Complete if Known	
				Application Number	16/512,560
				Filing Date	July 16, 2019
				First Named Inventor	Samuel English Anthony
				Applicant	Perceptive Automata, Inc.
				Art Unit	2664
				Confirmation Number	6385
				Examiner Name	Charlotte M. Baker
Sheet	1	of	3	Attorney Docket Number	35447-43490/US

U.S. PATENT DOCUMENTS				
		Document No.		
Examiner Initials*	Cite No.[1]	Number – Kind Code[2] (if known)	Publication Date MM-DD-YYYY	Name of Patentee or Applicant of Cited Document
	A1	US-10186123	01-22-2019	Kanaujia et al.
	A2	US-9881221	01-30-2018	Bala et al.
	A3	US-8854457	10-07-2014	De Vleeschouwer et al.
	A4	US-8175333	05-08-2012	Eaton et al.
	A5	US-7269516	09-11-2007	Brunner et al.
	A6	US-2018/0146198 A1	05-24-2018	Atluru et al.
	A7	US-2017/0270374 A1	09-21-2017	Myers et al.
	A8	US-2017/0153639 A1	06-01-2017	Stein
	A9	US-2015/0213555 A1	07-30-2015	Barfield, Jr., et al.

FOREIGN PATENT DOCUMENTS					
		Foreign Patent Document			
Examiner Initials*	Cite No.[1]	Country Code[3] – Number[4] Kind Code[5] (if known)	Publication Date MM-DD-YYYY	Name of Patentee or Applicant of Cited Document	T[6]
	B1				

OTHER REFERENCES – NON-PATENT LITERATURE DOCUMENTS			
Examiner Initials*	Cite No.[1]	Include name of the author (in CAPITAL LETTERS), title of the article (when appropriate), title of the item (book, magazine, journal, serial, symposium, catalog, etc.), date, page(s), volume-issue number(s), publisher, city and/or country where published	T[6]
	C1	GIRDHAR, R. and RAMANAN, D., "Attentional Pooling for Action Recognition," 31st Conference on Neural Information Processing Systems (NIPS 2017), 12 pages.	
	C2	HE, K., et al. "Mask R-CNN," Computer Vision and Pattern Recognition 1703.06870v3, January 24, 2018, 12 pages.	
	C3	International Search Report and Written Opinion, PCT Application No. PCT/US2018/063459, February 7, 2019, 13 pages.	

EXAMINER SIGNATURE	
Examiner Signature	
Date Considered	

*EXAMINER: Initial if reference considered, whether or not citation is in conformance with MPEP 609. Draw line through a citation if not in conformance and not considered. Include copy of this form with next communication to applicant.

[1] Applicant's unique citation designation number (option). [2] See Kind Codes of USPTO Patent Documents at www.USPTO.GOV or MPEP 901.04. [3] Enter office that issued the document, by the two-letter code (WIPO Standard ST.3). [4] For Japanese patent documents, the indication of the year of the reign of the Emperor must precede the serial number of the patent document.

[5] Kind of document by the appropriate symbols as indicated on the document under WIPO Standard ST.16 if possible. [6] Applicant is to place a check mark here if English language translation is attached.

INFORMATION DISCLOSURE STATEMENT BY APPLICANT (Not for submission under 37 CFR 1.99)				Complete if Known	
				Application Number	16/512,560
				Filing Date	July 16, 2019
				First Named Inventor	Samuel English Anthony
				Applicant	Perceptive Automata, Inc.
				Art Unit	2664
				Confirmation Number	6385
				Examiner Name	Charlotte M. Baker
Sheet	2	of	3	Attorney Docket Number	35447-43490/US

OTHER REFERENCES – NON-PATENT LITERATURE DOCUMENTS			
Examiner Initials*	Cite No.[1]	Include name of the author (in CAPITAL LETTERS), title of the article (when appropriate), title of the item (book, magazine, journal, serial, symposium, catalog, etc.), date, page(s), volume-issue number(s), publisher, city and/or country where published	T[6]
	C4	KARMARKAR, T., "Regional Proposal network (RPN)- Backbone of Faster R-CNN," August 18, 2018, 6 pages, [Online][Retrieved January 5, 2019], Retrieved from the internet <URL:https://medium.com/@tanaykarmarkar/region-proposal-network-rpn-bac>.	
	C5	KOTSERUBA, I., et al., "Joint Attention in Autonomous Driving (JADD),' Robotics 1609.04741v5, April 24, 2017, 10 pages.	
	C6	NEWELL, A., et al., "Stacked Hourglass Networks for Human Pose Estimation," Computer Vision and Pattern Recognition 1603.06937v2, July 26, 2016, 17 pages.	
	C7	REN, S. et al. "Faster R-CNN: Towards Real-Time Object Detection with Region Proposal Networks," Advances in Neural Information Processing Systems 28 (NIPS 2015), 9 pages.	
	C8	REN, S. et al. "Faster R-CNN: Towards Real-Time Object Detection with Region Proposal Networks," Computer Vision and Patteren Recognition 1506.01497v3, January 6, 2016, 14 pages.	
	C9	SANTORO, A. et al., "A neural approach to relational reasoning," June 6, 2017, 6 pages, [Online][Retrieved January 5, 2019], Retrieved from the internet <URL:https://deepmind.com/blog/neural-approach-relational-reasoning/>.	
	C10	SANTORO, A. et al., "A simple neural network module for relational reasoning," Computation and Language 1706.01427, June 5, 2017, 16 pages.	
	C11	SCHNEEMANN, F., et al., "Context-based Detection of Pedestrian Crossing Intention for Autonomous Driving in Urban Environments," 2016 IEEE/RSJ International Conference on Intelligent Robots and Systems (IROS), October 2016, 6 pages.	
	C12	WATTERS, N., et al., " Visual Interaction Networks," Computer Vision and Pattern Recognition 1706.01433v1, June 5, 2017, 14 pages.	
	C13	ZHAO, H., et al., "Pyramid Scheme Parsing Network," Computer Vision and Pattern Recognition 1612.01105v2, April 27, 2017, 11 pages.	

EXAMINER SIGNATURE	
Examiner Signature	
Date Considered	

*EXAMINER: Initial if reference considered, whether or not citation is in conformance with MPEP 609. Draw line through a citation if not in conformance and not considered. Include copy of this form with next communication to applicant.

[1] Applicant's unique citation designation number (option). [2] See Kind Codes of USPTO Patent Documents at www.USPTO.GOV or MPEP 901.04. [3] Enter office that issued the document, by the two-letter code (WIPO Standard ST.3). [4] For Japanese patent documents, the indication of the year of the reign of the Emperor must precede the serial number of the patent document.

[5] Kind of document by the appropriate symbols as indicated on the document under WIPO Standard ST.16 if possible. [6] Applicant is to place a check mark here if English language translation is attached.

INFORMATION DISCLOSURE STATEMENT BY APPLICANT (Not for submission under 37 CFR 1.99)				Complete if Known	
				Application Number	16/512,560
				Filing Date	July 16, 2019
				First Named Inventor	Samuel English Anthony
				Applicant	Perceptive Automata, Inc.
				Art Unit	2664
				Confirmation Number	6385
				Examiner Name	Charlotte M. Baker
Sheet	3	of	3	Attorney Docket Number	35447-43490/US

CERTIFICATION STATEMENT

Please see 37 CFR 1.97 and 1.98 to make the appropriate selection(s):

☐ That each item of information contained in the information disclosure statement was first cited in any communication from a foreign patent office in a counterpart foreign application not more than three months prior to the filing of the information disclosure statement. See 37 CFR 1.97(e)(1).

OR

☐ That no item of information contained in the information disclosure statement was cited in a communication from a foreign patent office in a counterpart foreign application, and, to the knowledge of the person signing the certification after making reasonable inquiry, no item of information contained in the information disclosure statement was known to any individual designated in 37 CFR 1.56(c) more than three months prior to the filing of the information disclosure statement. See 37 CFR 1.97(e)(2).

☐ See attached certification statement.

☐ The fee set forth in 37 CFR 1.17 (p) has been submitted herewith.

☒ A certification statement is not submitted herewith.

☒ **This application relies, under 35 U.S.C. § 120, on the earlier filing date of prior application No. 15/830,549, filed December 4, 2017 and the references C1-13 cited therein are hereby referenced, but are not required to be provided in this application under 37 CFR § 1.98(d).**

SIGNATURE

A signature of the applicant or representative is required in accordance with CFR 1.33, 10.18. Please see CFR 1.4(d) for the form of the signature.

Signature	/ Rajendra B. Panwar/	Date (YYYY-MM-DD)	2019-09-12
Name/Print	Rajendra B. Panwar	Registration Number	63,165

Electronic Acknowledgement Receipt

EFS ID:	37147430
Application Number:	16512560
International Application Number:	
Confirmation Number:	6385
Title of Invention:	SYSTEM AND METHOD OF PREDICTING HUMAN INTERACTION WITH VEHICLES
First Named Inventor/Applicant Name:	Samuel English Anthony
Customer Number:	758
Filer:	Rajendra Bhagwatisingh Panwar/Julie Eng
Filer Authorized By:	Rajendra Bhagwatisingh Panwar
Attorney Docket Number:	35447-43490/US
Receipt Date:	12-SEP-2019
Filing Date:	16-JUL-2019
Time Stamp:	15:01:00
Application Type:	Utility under 35 USC 111(a)

Payment information:

Submitted with Payment	no

File Listing:

Document Number	Document Description	File Name	File Size(Bytes)/ Message Digest	Multi Part /.zip	Pages (if appl.)
1	Information Disclosure Statement (IDS) Form (SB08)	43490_US_Information_Disclosure_Statement.pdf	210541 44762c86f644e6a89638b15bf50fc108a7b6ebc4	no	3

Warnings:

Information:	
This is not an USPTO supplied IDS fillable form	
Total Files Size (in bytes):	210541

This Acknowledgement Receipt evidences receipt on the noted date by the USPTO of the indicated documents, characterized by the applicant, and including page counts, where applicable. It serves as evidence of receipt similar to a Post Card, as described in MPEP 503.

New Applications Under 35 U.S.C. 111
If a new application is being filed and the application includes the necessary components for a filing date (see 37 CFR 1.53(b)-(d) and MPEP 506), a Filing Receipt (37 CFR 1.54) will be issued in due course and the date shown on this Acknowledgement Receipt will establish the filing date of the application.
National Stage of an International Application under 35 U.S.C. 371
If a timely submission to enter the national stage of an international application is compliant with the conditions of 35 U.S.C. 371 and other applicable requirements a Form PCT/DO/EO/903 indicating acceptance of the application as a national stage submission under 35 U.S.C. 371 will be issued in addition to the Filing Receipt, in due course.
New International Application Filed with the USPTO as a Receiving Office
If a new international application is being filed and the international application includes the necessary components for an international filing date (see PCT Article 11 and MPEP 1810), a Notification of the International Application Number and of the International Filing Date (Form PCT/RO/105) will be issued in due course, subject to prescriptions concerning national security, and the date shown on this Acknowledgement Receipt will establish the international filing date of the application.

PATENT ASSIGNMENT COVER SHEET

Electronic Version v1.1
Stylesheet Version v1.2

EPAS ID: PAT5766734

SUBMISSION TYPE:	NEW ASSIGNMENT
NATURE OF CONVEYANCE:	ASSIGNMENT

CONVEYING PARTY DATA

Name	Execution Date
SAMUEL ENGLISH ANTHONY	09/05/2019
KSHITIJ MISRA	09/10/2019
AVERY WAGNER FALLER	10/08/2019

RECEIVING PARTY DATA

Name:	PERCEPTIVE AUTOMATA, INC.
Street Address:	230 SOMERVILLE AVE
City:	SOMERVILLE
State/Country:	MASSACHUSETTS
Postal Code:	02143

PROPERTY NUMBERS Total: 1

Property Type	Number
Application Number:	16512560

CORRESPONDENCE DATA

Fax Number: (650)938-5200

Correspondence will be sent to the e-mail address first; if that is unsuccessful, it will be sent using a fax number, if provided; if that is unsuccessful, it will be sent via US Mail.

Phone: 6509888500
Email: npasciucco@fenwick.com
Correspondent Name: RAJENDRA PANWAR
Address Line 1: 801 CALIFORNIA STREET
Address Line 4: MOUNTAIN VIEW, CALIFORNIA 94041

ATTORNEY DOCKET NUMBER:	35447-43490/US
NAME OF SUBMITTER:	RAJENDRA B. PANWAR, REG NO 63165
SIGNATURE:	/Rajendra Panwar/
DATE SIGNED:	10/11/2019
	This document serves as an Oath/Declaration (37 CFR 1.63).

Total Attachments: 2
source=43490 US Combined Assignment Declaration#page1.tif
source=43490 US Combined Assignment Declaration#page2.tif

COMBINED ASSIGNMENT AND DECLARATION

For good and valuable consideration, the receipt of which is hereby acknowledged, the person(s) named below (referred to as "INVENTOR" whether singular or plural) has sold, assigned, and transferred and does hereby sell, assign, and transfer to **Perceptive Automata, Inc.**, a Delaware Corporation, having a place of business at **230 Somerville Ave, Somerville, MA 02143** ("ASSIGNEE"), for itself and its successors, transferees, and assignees, the following:

1. The entire worldwide right, title, and interest in all inventions and improvements ("SUBJECT MATTER") that are disclosed in any of the following patent application(s), Registered Community Design(s), international application(s) filed according to the Patent Cooperation Treaty (PCT), or U.S. national phase application(s) (collectively, the "APPLICATION"), and any patents issuing thereon ("PATENT RIGHTS"):

   - U.S. Application No. **16/512,560**, entitled **SYSTEM AND METHOD OF PREDICTING HUMAN INTERACTION WITH VEHICLES**, filed on **July 16, 2019**, which is a continuation of U.S. Application No. 15/830,549, filed on December 4, 2017, which claims priority from a provisional application, filed on July 5, 2017, now bearing U.S. Application No. 62/528,771.

2. The entire worldwide right, title, and interest in and to: (a) the APPLICATION; (b) all applications claiming priority from the APPLICATION; (c) all provisional, utility, divisional, continuation, substitute, renewal, reissue, and other applications related thereto that have been or may be filed in the United States or elsewhere in the world; (d) all patents (including reissues and re-examinations) that may be granted on the applications set forth in (a), (b), and (c) above; and (e) all right of priority in the APPLICATION and in any underlying provisional or foreign application, together with all rights to recover damages for infringement of provisional rights.

INVENTOR agrees that ASSIGNEE may apply for and receive patents for SUBJECT MATTER in ASSIGNEE's own name.

INVENTOR agrees to do the following, when requested, and without further consideration, in order to carry out the intent of this Assignment: (1) execute all oaths, assignments, powers of attorney, applications, and other papers necessary or desirable to fully secure to ASSIGNEE the rights, titles and interests herein conveyed; (2) communicate to ASSIGNEE all known facts relating to the SUBJECT MATTER; and (3) generally do all lawful acts that ASSIGNEE shall consider desirable for securing, maintaining, and enforcing worldwide patent protection relating to the SUBJECT MATTER and for vesting in ASSIGNEE the rights, titles, and interests herein conveyed. INVENTOR further agrees to provide any successor, assign, or legal representative of ASSIGNEE with the benefits and assistance provided to ASSIGNEE hereunder.

INVENTOR represents that INVENTOR has the rights, titles, and interests to convey as set forth herein, and covenants with ASSIGNEE that the INVENTOR has not made and will not

hereafter make any assignment, grant, mortgage, license, or other agreement affecting the rights, titles, and interests herein conveyed.

INVENTOR grants the attorney of record the power to insert on this Assignment any further identification that may be necessary or desirable in order to comply with the rules of the United States Patent and Trademark Office or other authority for recordation of this document.

This Assignment may be executed in one or more counterparts, each of which shall be deemed an original and all of which may be taken together as one and the same Assignment.

By signing below, INVENTOR further attests to the following:

- The APPLICATION was made or authorized to be made by INVENTOR.
- INVENTOR believes that INVENTOR is the original inventor or an original joint inventor of a claimed invention in the APPLICATION.

INVENTOR hereby acknowledges that any willful false statement made in this document is punishable under 18 U.S.C. 1001 by fine or imprisonment of not more than five (5) years, or both.

Name and Signature	Date of Signature (REQUIRED)
Samuel English Anthony	9/5/2019
Samuel English Anthony	
Name and Signature	Date of Signature (REQUIRED)
Kshitij Misra	9/10/2019
Kshitij Misra	
Name and Signature	Date of Signature (REQUIRED)
Avery Wagner Faller	10/8/2019
Avery Wagner Faller	

UNITED STATES PATENT AND TRADEMARK OFFICE

UNITED STATES DEPARTMENT OF COMMERCE
United States Patent and Trademark Office
Address: COMMISSIONER FOR PATENTS
P.O. Box 1450
Alexandria, Virginia 22313-1450
www.uspto.gov

APPLICATION NUMBER	FILING OR 371(C) DATE	FIRST NAMED APPLICANT	ATTY. DOCKET NO./TITLE
16/512,560	07/16/2019	Samuel English Anthony	35447-43490/US

CONFIRMATION NO. 6385

PUBLICATION NOTICE

758
FENWICK & WEST LLP
SILICON VALLEY CENTER
801 CALIFORNIA STREET
MOUNTAIN VIEW, CA 94041

OC000000112483942

Title:SYSTEM AND METHOD OF PREDICTING HUMAN INTERACTION WITH VEHICLES

Publication No.US-2019-0340465-A1
Publication Date:11/07/2019

NOTICE OF PUBLICATION OF APPLICATION

The above-identified application will be electronically published as a patent application publication pursuant to 37 CFR 1.211, et seq. The patent application publication number and publication date are set forth above.

The publication may be accessed through the USPTO's publically available Searchable Databases via the Internet at www.uspto.gov. The direct link to access the publication is currently http://www.uspto.gov/patft/.

The publication process established by the Office does not provide for mailing a copy of the publication to applicant. A copy of the publication may be obtained from the Office upon payment of the appropriate fee set forth in 37 CFR 1.19(a)(1). Orders for copies of patent application publications are handled by the USPTO's Public Records Division. The Public Records Division can be reached by telephone at (571) 272-3150 or (800) 972-6382, by facsimile at (571) 273-3250, by mail addressed to the United States Patent and Trademark Office, Public Records Division, Alexandria, VA 22313-1450 or via the Internet.

In addition, information on the status of the application, including the mailing date of Office actions and the dates of receipt of correspondence filed in the Office, may also be accessed via the Internet through the Patent Electronic Business Center at www.uspto.gov using the public side of the Patent Application Information and Retrieval (PAIR) system. The direct link to access this status information is currently https://portal.uspto.gov/pair/PublicPair. Prior to publication, such status information is confidential and may only be obtained by applicant using the private side of PAIR.

Further assistance in electronically accessing the publication, or about PAIR, is available by calling the Patent Electronic Business Center at 1-866-217-9197.

Office of Data Managment, Application Assistance Unit (571) 272-4000, or (571) 272-4200, or 1-888-786-0101

Doc Code: DIST.E.FILE **Document Description: Electronic Terminal Disclaimer - Filed**	PTO/SB/25 U.S. Patent and Trademark Office Department of Commerce

Electronic Petition Request	**TERMINAL DISCLAIMER TO OBVIATE A PROVISIONAL DOUBLE PATENTING REJECTION OVER A PENDING "REFERENCE" APPLICATION**
Application Number	16512560
Filing Date	16-Jul-2019
First Named Inventor	Samuel Anthony
Attorney Docket Number	35447-43490/US
Title of Invention	SYSTEM AND METHOD OF PREDICTING HUMAN INTERACTION WITH VEHICLES

☒ Filing of terminal disclaimer does not obviate requirement for response under 37 CFR 1.111 to outstanding Office Action

☒ This electronic Terminal Disclaimer is not being used for a Joint Research Agreement.

Owner	Percent Interest
Perceptive Automata, Inc.	100%

The owner(s) of percent interest listed above in the instant application hereby disclaims, except as provided below, the terminal part of the statutory term of any patent granted on the instant application which would extend beyond the expiration date of the full statutory term of any patent granted on pending reference Application Number(s)

15830549 filed on 12/04/2017

as the term of any patent granted on said reference application may be shortened by any terminal disclaimer filed prior to the grant of any patent on the pending reference application. The owner hereby agrees that any patent so granted on the instant application shall be enforceable only for and during such period that it and any patent granted on the reference application are commonly owned. This agreement runs with any patent granted on the instant application and is binding upon the grantee, its successors or assigns.

In making the above disclaimer, the owner does not disclaim the terminal part of any patent granted on the instant application that would extend to the expiration date of the full statutory term of any patent granted on said reference application, "as the term of any patent granted on said reference application may be shortened by any terminal disclaimer filed prior to the grant of any patent on the pending reference application," in the event that any such patent granted on the pending reference application: expires for failure to pay a maintenance fee, is held unenforceable, is found invalid by a court of competent jurisdiction, is statutorily disclaimed in whole or terminally disclaimed under 37 CFR 1.321, has all claims canceled by a reexamination certificate, is reissued, or is in any manner terminated prior to the expiration of its full statutory term as shortened by any terminal disclaimer filed prior to its grant.

◉ Terminal disclaimer fee under 37 CFR 1.20(d) is included with Electronic Terminal Disclaimer request.

○	I certify, in accordance with 37 CFR 1.4(d)(4), that the terminal disclaimer fee under 37 CFR 1.20(d) required for this terminal disclaimer has already been paid in the above-identified application.

Applicant claims the following fee status:

◉ Small Entity

○ Micro Entity

○ Regular Undiscounted

I hereby declare that all statements made herein of my own knowledge are true and that all statements made on information and belief are believed to be true; and further that these statements were made with the knowledge that willful false statements and the like so made are punishable by fine or imprisonment, or both, under Section 1001 of Title 18 of the United States Code and that such willful false statements may jeopardize the validity of the application or any patent issued thereon.

THIS PORTION MUST BE COMPLETED BY THE SIGNATORY OR SIGNATORIES

I certify, in accordance with 37 CFR 1.4(d)(4) that I am:

◉ An attorney or agent registered to practice before the Patent and Trademark Office who is of record in this application

Registration Number 63165

○ A sole inventor

○ A joint inventor; I certify that I am authorized to sign this submission on behalf of all of the inventors as evidenced by the power of attorney in the application

○ A joint inventor; all of whom are signing this request

Signature	/Rajendra Panwar/
Name	Rajendra Panwar

*Statement under 37 CFR 3.73(b) is required if terminal disclaimer is signed by the assignee (owner).
Form PTO/SB/96 may be used for making this certification. See MPEP § 324.

Electronic Patent Application Fee Transmittal

Application Number:	16512560
Filing Date:	16-Jul-2019
Title of Invention:	SYSTEM AND METHOD OF PREDICTING HUMAN INTERACTION WITH VEHICLES
First Named Inventor/Applicant Name:	Samuel English Anthony
Filer:	Rajendra Bhagwatisingh Panwar
Attorney Docket Number:	35447-43490/US

Filed as Small Entity

Filing Fees for Utility under 35 USC 111(a)

Description	Fee Code	Quantity	Amount	Sub-Total in USD($)
Basic Filing:				
STATUTORY OR TERMINAL DISCLAIMER	2814	1	160	160
Pages:				
Claims:				
Miscellaneous-Filing:				
Petition:				
Patent-Appeals-and-Interference:				
Post-Allowance-and-Post-Issuance:				

Description	Fee Code	Quantity	Amount	Sub-Total in USD($)
Extension-of-Time:				
Miscellaneous:				
			Total in USD ($)	**160**

Doc Code: DISQ.E.FILE
Document Description: Electronic Terminal Disclaimer – Approved

Application No.: 16512560

Filing Date: 16-Jul-2019

Applicant/Patent under Reexamination: Anthony

Electronic Terminal Disclaimer filed on November 19, 2019

☒ APPROVED

This patent is subject to a terminal disclaimer

☐ DISAPPROVED

Approved/Disapproved by: Electronic Terminal Disclaimer automatically approved by EFS-Web

U.S. Patent and Trademark Office

Electronic Acknowledgement Receipt

EFS ID:	37787666
Application Number:	16512560
International Application Number:	
Confirmation Number:	6385
Title of Invention:	SYSTEM AND METHOD OF PREDICTING HUMAN INTERACTION WITH VEHICLES
First Named Inventor/Applicant Name:	Samuel English Anthony
Customer Number:	758
Filer:	Rajendra Bhagwatisingh Panwar
Filer Authorized By:	
Attorney Docket Number:	35447-43490/US
Receipt Date:	19-NOV-2019
Filing Date:	16-JUL-2019
Time Stamp:	01:24:33
Application Type:	Utility under 35 USC 111(a)

Payment information:

Submitted with Payment	yes
Payment Type	DA
Payment was successfully received in RAM	$160
RAM confirmation Number	E2019AI224317898
Deposit Account	192555
Authorized User	Rajendra Panwar

The Director of the USPTO is hereby authorized to charge indicated fees and credit any overpayment as follows:

37 CFR 1.16 (National application filing, search, and examination fees)

37 CFR 1.17 (Patent application and reexamination processing fees)

37 CFR 1.19 (Document supply fees)

37 CFR 1.20 (Post Issuance fees)

37 CFR 1.21 (Miscellaneous fees and charges)

File Listing:

Document Number	Document Description	File Name	File Size(Bytes)/ Message Digest	Multi Part /.zip	Pages (if appl.)
1	Terminal Disclaimer-Filed (Electronic)	eTerminal-Disclaimer.pdf	34084 9b935ab46e8f53e3e0381565f3679062054eeb36	no	2
Warnings:					
Information:					
2	Fee Worksheet (SB06)	fee-info.pdf	30831 2b18a3ac2c410b20695ad1d75ef3058668952802	no	2
Warnings:					
Information:					
		Total Files Size (in bytes):	64915		

This Acknowledgement Receipt evidences receipt on the noted date by the USPTO of the indicated documents, characterized by the applicant, and including page counts, where applicable. It serves as evidence of receipt similar to a Post Card, as described in MPEP 503.

<u>New Applications Under 35 U.S.C. 111</u>
If a new application is being filed and the application includes the necessary components for a filing date (see 37 CFR 1.53(b)-(d) and MPEP 506), a Filing Receipt (37 CFR 1.54) will be issued in due course and the date shown on this Acknowledgement Receipt will establish the filing date of the application.
<u>National Stage of an International Application under 35 U.S.C. 371</u>
If a timely submission to enter the national stage of an international application is compliant with the conditions of 35 U.S.C. 371 and other applicable requirements a Form PCT/DO/EO/903 indicating acceptance of the application as a national stage submission under 35 U.S.C. 371 will be issued in addition to the Filing Receipt, in due course.
<u>New International Application Filed with the USPTO as a Receiving Office</u>
If a new international application is being filed and the international application includes the necessary components for an international filing date (see PCT Article 11 and MPEP 1810), a Notification of the International Application Number and of the International Filing Date (Form PCT/RO/105) will be issued in due course, subject to prescriptions concerning national security, and the date shown on this Acknowledgement Receipt will establish the international filing date of the application.

IN THE UNITED STATES PATENT AND TRADEMARK OFFICE

FIRST INVENTOR	Samuel English Anthony
APPLICATION NO.:	16/512,560
TITLE:	SYSTEM AND METHOD OF PREDICTING HUMAN INTERACTION WITH VEHICLES
FILING DATE:	July 16, 2019
EXAMINER:	Baker, Charlotte M
GROUP ART UNIT:	2664
CONFIRMATION NO.	6385
ATTY. DKT. NO.:	35447-43490/US

CERTIFICATE OF TRANSMISSION			
I hereby certify under 37 C.F.R. § 1.8(a)(ii) that this correspondence is being deposited or transmitted in accordance with 37 C.F.R. § 1.8(a)(i) on or before the local date shown below.			
Signature:	/ Rajendra B. Panwar/		
Typed or Printed Name:	Rajendra B. Panwar, Reg No 63,165	Dated:	November 18, 2019

RESPONSE AND AMENDMENT A

The following is in response to the Office Action mailed August 16, 2019.

Electronic Acknowledgement Receipt

EFS ID:	37787680
Application Number:	16512560
International Application Number:	
Confirmation Number:	6385
Title of Invention:	SYSTEM AND METHOD OF PREDICTING HUMAN INTERACTION WITH VEHICLES
First Named Inventor/Applicant Name:	Samuel English Anthony
Customer Number:	758
Filer:	Rajendra Bhagwatisingh Panwar
Filer Authorized By:	
Attorney Docket Number:	35447-43490/US
Receipt Date:	19-NOV-2019
Filing Date:	16-JUL-2019
Time Stamp:	01:35:46
Application Type:	Utility under 35 USC 111(a)

Payment information:

Submitted with Payment	no

File Listing:

Document Number	Document Description	File Name	File Size(Bytes)/ Message Digest	Multi Part /.zip	Pages (if appl.)
1		43490_US_Amendment.pdf	93519 1a9be7609737a06c6667ed6185a35733b515a73c	yes	9

	Multipart Description/PDF files in .zip description		
	Document Description	**Start**	**End**
	Applicant Arguments/Remarks Made in an Amendment	9	9
	Claims	2	8
	Amendment/Req. Reconsideration-After Non-Final Reject	1	1

Warnings:	
Information:	
Total Files Size (in bytes):	93519

This Acknowledgement Receipt evidences receipt on the noted date by the USPTO of the indicated documents, characterized by the applicant, and including page counts, where applicable. It serves as evidence of receipt similar to a Post Card, as described in MPEP 503.

<u>New Applications Under 35 U.S.C. 111</u>
If a new application is being filed and the application includes the necessary components for a filing date (see 37 CFR 1.53(b)-(d) and MPEP 506), a Filing Receipt (37 CFR 1.54) will be issued in due course and the date shown on this Acknowledgement Receipt will establish the filing date of the application.
<u>National Stage of an International Application under 35 U.S.C. 371</u>
If a timely submission to enter the national stage of an international application is compliant with the conditions of 35 U.S.C. 371 and other applicable requirements a Form PCT/DO/EO/903 indicating acceptance of the application as a national stage submission under 35 U.S.C. 371 will be issued in addition to the Filing Receipt, in due course.
<u>New International Application Filed with the USPTO as a Receiving Office</u>
If a new international application is being filed and the international application includes the necessary components for an international filing date (see PCT Article 11 and MPEP 1810), a Notification of the International Application Number and of the International Filing Date (Form PCT/RO/105) will be issued in due course, subject to prescriptions concerning national security, and the date shown on this Acknowledgement Receipt will establish the international filing date of the application.

REMARKS

Claims 1–22 were pending in this application, and claims 1, 10, and 19 were the independent claims. Claims 1–22 were allowable. Claims 1, 10, and 19 are amended herein.

DOUBLE PATENTING REJECTION

Claims 1-22 are rejected on the ground of non-statutory double patenting as being unpatentable over claims 1-20 of U.S. Patent Application No. 15/830,549. A terminal disclaimer was filed on November 18, 2019, obviating this rejection.

CONCLUSION

Based on the foregoing, the application is in condition for allowance of all claims, and a Notice of Allowance is respectfully requested. If the examiner believes for any reason direct contact would help advance the prosecution of this case to allowance, the examiner is encouraged to telephone the undersigned at the number given below.

If extensions of time are necessary to prevent abandonment of this application, then such extension of time are hereby petitioned under 37 CFR 1.136(a), and any fees required therefore are hereby authorized to be charged to our Deposit Account 19-2555.

Respectfully submitted,

Dated: November 18, 2019

/ Rajendra B. Panwar /

Rajendra B. Panwar, Ph.D.
Reg. No. 63,165
FENWICK & WEST LLP
801 California Street
Mountain View, CA 94041
Phone: (650) 335-7107
Fax: (650) 938-5200

AMENDMENTS TO THE CLAIMS

All pending claims, along with a current status of each, are reproduced below. If indicated, please amend the claims accordingly.

1. (Currently Amended) A computer-implemented method comprising:

receiving, by a computing device associated with an autonomous vehicle operating on a road, sensor data captured by a sensor installed on the autonomous vehicle, the sensor data displaying an object on the road;

providing the sensor data as input to a supervised learning based model, the supervised learning based model configured to receive an input sensor data displaying a particular object on a road and predicting an output statistical summary characterizing a distribution of user responses expected to be received responsive to presenting the sensor data to a plurality of users, the user responses associated with the particular object;

executing the trained supervised learning based model to generate a statistical summary data characterizing a distribution of user responses expected to be received responsive to presenting the sensor data captured by the sensor installed on the autonomous vehicle <u>to users</u>; <u>and</u>

controlling the operation of the autonomous vehicle on the road based on the generated statistical summary data.

2. (Original) The computer-implemented method of claim 1, wherein the supervised learning based model is one of:

a random forest regressor,

a support vector regressor,

a simple neural network,

a deep convolutional neural network,

a recurrent neural network,

or a long short-term memory (LSTM) neural network.

3. (Original) The computer-implemented method of claim 1, wherein the object on the road is one of:

a pedestrian,

a cyclist, or

a motor vehicle.

4. (Original) The computer-implemented method of claim 1, wherein the user responses describe an action associated with the object, the action including one of the object staying in place, changing lanes, or crossing a street.

5. (Original) The computer-implemented method of claim 1, wherein the statistical data is associated with a parameter of the subset of the plurality of response data, the parameter including at least one of a content of a response, a time associated with entering a response, and a position of an eye of a human observer associated with the response, the position being measured with respect to a display associated with the user interface.

6. (Original) The computer-implemented method of claim 5, wherein the parameter is further associated with at least one of a central tendency, a variance, a skew, a kurtosis, a scale, and a histogram.

7. (Original) The computer-implemented method of claim 1, wherein the supervised learning based model is configured to predict user responses describing a state of mind of a road user associated with the object.

8. (Original) The computer-implemented method of claim 1, wherein the object is associated with a road user and the supervised learning based model is configured to predict user responses describing an intention of the road user to move into the path of the autonomous vehicle.

9. (Original) The computer-implemented method of claim 1, wherein the object is associated with a road user and the supervised learning based model is configured to predict user responses describing awareness of the road user of the autonomous vehicle.

10. (Currently Amended) A non-transitory computer readable storage medium storing instructions that when executed by one or more processors, cause the one or more processors to perform the steps comprising:

receiving, by a computing device associated with an autonomous vehicle operating on a road, sensor data captured by a sensor installed on the autonomous vehicle, the sensor data displaying an object on the road;

providing the sensor data as input to a supervised learning based model, the supervised learning based model configured to receive an input sensor data displaying a particular object on a road and predicting an output statistical summary characterizing a distribution of user responses expected to be received responsive to presenting the sensor data to a plurality of users, the user responses associated with the particular object;

executing the trained supervised learning based model to generate a statistical summary data characterizing a distribution of user responses expected to be received responsive to presenting the sensor data captured by the sensor installed on the autonomous vehicle <u>to users</u>; <u>and</u>

controlling the operation of the autonomous vehicle on the road based on the generated statistical summary data.

11. (Original) The non-transitory computer readable storage medium of claim 10, wherein the supervised learning based model is one of:

a random forest regressor,

a support vector regressor,

a simple neural network,

a deep convolutional neural network,

a recurrent neural network,

or a long short-term memory (LSTM) neural network.

12. (Original) The non-transitory computer readable storage medium of claim 10, wherein the object on the road is one of:

a pedestrian,

a cyclist, or

a motor vehicle.

13. (Original) The non-transitory computer readable storage medium of claim 10, wherein the user responses describe an action associated with the object, the action including one of the object staying in place, changing lanes, or crossing a street.

14. (Original) The non-transitory computer readable storage medium of claim 10, wherein the statistical data is associated with a parameter of the subset of the plurality of response data, the parameter including at least one of a content of a response, a time associated with entering a response, and a position of an eye of a human observer associated with the response, the position being measured with respect to a display associated with the user interface.

15. (Original) The non-transitory computer readable storage medium of claim 14, wherein the parameter is further associated with at least one of a central tendency, a variance, a skew, a kurtosis, a scale, and a histogram.

16. (Original) The non-transitory computer readable storage medium of claim 10, wherein the supervised learning based model is configured to predict user responses describing a state of mind of a road user associated with the object.

17. (Original) The non-transitory computer readable storage medium of claim 10, wherein the object is associated with a road user and the supervised learning based model is configured to predict user responses describing an intention of the road user to move into the path of the autonomous vehicle.

18. (Original) The non-transitory computer readable storage medium of claim 10, wherein the object is associated with a road user and the supervised learning based model is configured to predict user responses describing awareness of the road user of the autonomous vehicle.

19. (Currently Amended) A computing system comprising:

one or more processors; and

a non-transitory computer readable storage medium, storing instructions that when executed by the one or more processors, cause the one or more processors to perform steps comprising:

receiving, by a computing device associated with an autonomous vehicle operating on a road, sensor data captured by a sensor installed on the autonomous vehicle, the sensor data displaying an object on the road;

providing the sensor data as input to a supervised learning based model, the supervised learning based model configured to receive an input sensor data displaying a particular object on a road and predicting an output statistical summary characterizing a distribution of user responses expected to be received responsive to presenting the sensor data to a plurality of users, the user responses associated with the particular object;

executing the trained supervised learning based model to generate a statistical summary data characterizing a distribution of user responses expected to be received responsive to presenting the sensor data captured by the sensor installed on the autonomous vehicle <u>to users</u>; <u>and</u>

controlling the operation of the autonomous vehicle on the road based on the generated statistical summary data.

20. (Original) The computing system of claim 19, wherein the supervised learning based model is configured to predict user responses describing a state of mind of a road user associated with the object.

21. (Original) The computing system of claim 19, wherein the object is associated with a road user and the supervised learning based model is configured to predict user responses describing an intention of the road user to move into the path of the autonomous vehicle.

22. (Original) The computing system of claim 19, wherein the object is associated with a road user and the supervised learning based model is configured to predict user responses describing awareness of the road user of the autonomous vehicle.

PTO/SB/06 (09-11)
Approved for use through 1/31/2014. OMB 0651-0032
U.S. Patent and Trademark Office; U.S. DEPARTMENT OF COMMERCE
Under the Paperwork Reduction Act of 1995, no persons are required to respond to a collection of information unless it displays a valid OMB control number.

PATENT APPLICATION FEE DETERMINATION RECORD Substitute for Form PTO-875	Application or Docket Number 16/512,560	Filing Date 07/16/2019	☐ To be Mailed

ENTITY: ☐ LARGE ☑ SMALL ☐ MICRO

APPLICATION AS FILED - PART I

FOR	(Column 1) NUMBER FILED	(Column 2) NUMBER EXTRA		RATE ($)	FEE ($)
☐ BASIC FEE (37 CFR 1.16(a), (b), or (c))	N/A	N/A		N/A	
☐ SEARCH FEE (37 CFR 1.16(k), (i), or (m))	N/A	N/A		N/A	
☐ EXAMINATION FEE (37 CFR 1.16(o), (p), or (q))	N/A	N/A		N/A	
TOTAL CLAIMS (37 CFR 1.16(i))	minus 20 =	*		x $50 =	
INDEPENDENT CLAIMS (37 CFR 1.16(h))	minus 3 =	*		x $230 =	
☐ APPLICATION SIZE FEE (37 CFR 1.16(s))	If the specification and drawings exceed 100 sheets of paper, the application size fee due is $310 ($155 for small entity) for each additional 50 sheets or fraction thereof. See 35 U.S.C. 41(a)(1)(G) and 37 CFR 1.16(s).				
☐ MULTIPLE DEPENDENT CLAIM PRESENT (37 CFR 1.16(j))					
* If the difference in column 1 is less than zero, enter "0" in column 2.				TOTAL	

APPLICATION AS AMENDED - PART II

AMENDMENT	11/19/2019	(Column 1) CLAIMS REMAINING AFTER AMENDMENT		(Column 2) HIGHEST NUMBER PREVIOUSLY PAID FOR	(Column 3) PRESENT EXTRA		RATE ($)	ADDITIONAL FEE ($)
	Total (37 CFR 1.16(i))	* 22	Minus	** 22	= 0		x $50 =	0
	Independent (37 CFR 1.16(h))	* 3	Minus	*** 3	= 0		x $230 =	0
	☐ Application Size Fee (37 CFR 1.16(s))							
	☐ FIRST PRESENTATION OF MULTIPLE DEPENDENT CLAIM (37 CFR 1.16(j))							
							TOTAL ADD'L FEE	0

AMENDMENT		(Column 1) CLAIMS REMAINING AFTER AMENDMENT		(Column 2) HIGHEST NUMBER PREVIOUSLY PAID FOR	(Column 3) PRESENT EXTRA		RATE ($)	ADDITIONAL FEE ($)
	Total (37 CFR 1.16(i))	*	Minus	**	=		x $0 =	
	Independent (37 CFR 1.16(h))	*	Minus	***	=		x $0 =	
	☐ Application Size Fee (37 CFR 1.16(s))							
	☐ FIRST PRESENTATION OF MULTIPLE DEPENDENT CLAIM (37 CFR 1.16(j))							
							TOTAL ADD'L FEE	

* If the entry in column 1 is less than the entry in column 2, write "0" in column 3.	LIE
** If the "Highest Number Previously Paid For" IN THIS SPACE is less than 20, enter "20".	/PEGGY S YARBOROUGH/
*** If the "Highest Number Previously Paid For" IN THIS SPACE is less than 3, enter "3".	
The "Highest Number Previously Paid For" (Total or Independent) is the highest number found in the appropriate box in column 1.	

This collection of information is required by 37 CFR 1.16. The information is required to obtain or retain a benefit by the public which is to file (and by the USPTO to process) an application. Confidentiality is governed by 35 U.S.C. 122 and 37 CFR 1.14. This collection is estimated to take 12 minutes to complete, including gathering, preparing, and submitting the completed application form to the USPTO. Time will vary depending upon the individual case. Any comments on the amount of time you require to complete this form and/or suggestions for reducing this burden, should be sent to the Chief Information Officer, U.S. Patent and Trademark Office, U.S. Department of Commerce, P.O. Box 1450, Alexandria, VA 22313-1450. DO NOT SEND FEES OR COMPLETED FORMS TO THIS ADDRESS. **SEND TO: Commissioner for Patents, P.O. Box 1450, Alexandria, VA 22313-1450.**

If you need assistance in completing the form, call 1-800-PTO-9199 and select option 2.

UNITED STATES PATENT AND TRADEMARK OFFICE

UNITED STATES DEPARTMENT OF COMMERCE
United States Patent and Trademark Office
Address: COMMISSIONER FOR PATENTS
P.O. Box 1450
Alexandria, Virginia 22313-1450
www.uspto.gov

NOTICE OF ALLOWANCE AND FEE(S) DUE

758 7590 12/04/2019
FENWICK & WEST LLP
SILICON VALLEY CENTER
801 CALIFORNIA STREET
MOUNTAIN VIEW, CA 94041

EXAMINER
BAKER, CHARLOTTE M

ART UNIT	PAPER NUMBER
2664	

DATE MAILED: 12/04/2019

APPLICATION NO.	FILING DATE	FIRST NAMED INVENTOR	ATTORNEY DOCKET NO.	CONFIRMATION NO.
16/512,560	07/16/2019	Samuel English Anthony	35447-43490/US	6385

TITLE OF INVENTION: SYSTEM AND METHOD OF PREDICTING HUMAN INTERACTION WITH VEHICLES

APPLN. TYPE	ENTITY STATUS	ISSUE FEE DUE	PUBLICATION FEE DUE	PREV. PAID ISSUE FEE	TOTAL FEE(S) DUE	DATE DUE
nonprovisional	SMALL	$500	$0.00	$0.00	$500	03/04/2020

THE APPLICATION IDENTIFIED ABOVE HAS BEEN EXAMINED AND IS ALLOWED FOR ISSUANCE AS A PATENT. PROSECUTION ON THE MERITS IS CLOSED. THIS NOTICE OF ALLOWANCE IS NOT A GRANT OF PATENT RIGHTS. THIS APPLICATION IS SUBJECT TO WITHDRAWAL FROM ISSUE AT THE INITIATIVE OF THE OFFICE OR UPON PETITION BY THE APPLICANT. SEE 37 CFR 1.313 AND MPEP 1308.

THE ISSUE FEE AND PUBLICATION FEE (IF REQUIRED) MUST BE PAID WITHIN THREE MONTHS FROM THE MAILING DATE OF THIS NOTICE OR THIS APPLICATION SHALL BE REGARDED AS ABANDONED. THIS STATUTORY PERIOD CANNOT BE EXTENDED. SEE 35 U.S.C. 151. THE ISSUE FEE DUE INDICATED ABOVE DOES NOT REFLECT A CREDIT FOR ANY PREVIOUSLY PAID ISSUE FEE IN THIS APPLICATION. IF AN ISSUE FEE HAS PREVIOUSLY BEEN PAID IN THIS APPLICATION (AS SHOWN ABOVE), THE RETURN OF PART B OF THIS FORM WILL BE CONSIDERED A REQUEST TO REAPPLY THE PREVIOUSLY PAID ISSUE FEE TOWARD THE ISSUE FEE NOW DUE.

HOW TO REPLY TO THIS NOTICE:

I. Review the ENTITY STATUS shown above. If the ENTITY STATUS is shown as SMALL or MICRO, verify whether entitlement to that entity status still applies.

If the ENTITY STATUS is the same as shown above, pay the TOTAL FEE(S) DUE shown above.

If the ENTITY STATUS is changed from that shown above, on PART B - FEE(S) TRANSMITTAL, complete section number 5 titled "Change in Entity Status (from status indicated above)".

For purposes of this notice, small entity fees are 1/2 the amount of undiscounted fees, and micro entity fees are 1/2 the amount of small entity fees.

II. PART B - FEE(S) TRANSMITTAL, or its equivalent, must be completed and returned to the United States Patent and Trademark Office (USPTO) with your ISSUE FEE and PUBLICATION FEE (if required). If you are charging the fee(s) to your deposit account, section "4b" of Part B - Fee(s) Transmittal should be completed and an extra copy of the form should be submitted. If an equivalent of Part B is filed, a request to reapply a previously paid issue fee must be clearly made, and delays in processing may occur due to the difficulty in recognizing the paper as an equivalent of Part B.

III. All communications regarding this application must give the application number. Please direct all communications prior to issuance to Mail Stop ISSUE FEE unless advised to the contrary.

IMPORTANT REMINDER: Maintenance fees are due in utility patents issuing on applications filed on or after Dec. 12, 1980. It is patentee's responsibility to ensure timely payment of maintenance fees when due. More information is available at www.uspto.gov/PatentMaintenanceFees.

TESLA EXHIBIT 1009, Page 133

PART B - FEE(S) TRANSMITTAL

Complete and send this form, together with applicable fee(s), by mail or fax, or via EFS-Web.

By mail, send to: Mail Stop ISSUE FEE
Commissioner for Patents
P.O. Box 1450
Alexandria, Virginia 22313-1450

By fax, send to: (571)-273-2885

INSTRUCTIONS: This form should be used for transmitting the ISSUE FEE and PUBLICATION FEE (if required). Blocks 1 through 5 should be completed where appropriate. All further correspondence including the Patent, advance orders and notification of maintenance fees will be mailed to the current correspondence address as indicated unless corrected below or directed otherwise in Block 1, by (a) specifying a new correspondence address; and/or (b) indicating a separate "FEE ADDRESS" for maintenance fee notifications.

CURRENT CORRESPONDENCE ADDRESS (Note: Use Block 1 for any change of address)

758 7590 12/04/2019
FENWICK & WEST LLP
SILICON VALLEY CENTER
801 CALIFORNIA STREET
MOUNTAIN VIEW, CA 94041

Note: A certificate of mailing can only be used for domestic mailings of the Fee(s) Transmittal. This certificate cannot be used for any other accompanying papers. Each additional paper, such as an assignment or formal drawing, must have its own certificate of mailing or transmission.

Certificate of Mailing or Transmission

I hereby certify that this Fee(s) Transmittal is being deposited with the United States Postal Service with sufficient postage for first class mail in an envelope addressed to the Mail Stop ISSUE FEE address above, or being transmitted to the USPTO via EFS-Web or by facsimile to (571) 273-2885, on the date below.

(Typed or printed name)

(Signature)

(Date)

APPLICATION NO.	FILING DATE	FIRST NAMED INVENTOR	ATTORNEY DOCKET NO.	CONFIRMATION NO.
16/512,560	07/16/2019	Samuel English Anthony	35447-43490/US	6385

TITLE OF INVENTION: SYSTEM AND METHOD OF PREDICTING HUMAN INTERACTION WITH VEHICLES

APPLN. TYPE	ENTITY STATUS	ISSUE FEE DUE	PUBLICATION FEE DUE	PREV. PAID ISSUE FEE	TOTAL FEE(S) DUE	DATE DUE
nonprovisional	SMALL	$500	$0.00	$0.00	$500	03/04/2020

EXAMINER	ART UNIT	CLASS-SUBCLASS
BAKER, CHARLOTTE M	2664	382-104000

1. Change of correspondence address or indication of "Fee Address" (37 CFR 1.363).

❑ Change of correspondence address (or Change of Correspondence Address form PTO/SB/122) attached.

❑ "Fee Address" indication (or "Fee Address" Indication form PTO/SB/47; Rev 03-09 or more recent) attached. **Use of a Customer Number is required.**

2. For printing on the patent front page, list
(1) The names of up to 3 registered patent attorneys or agents OR, alternatively,
(2) The name of a single firm (having as a member a registered attorney or agent) and the names of up to 2 registered patent attorneys or agents. If no name is listed, no name will be printed.

1_____
2_____
3_____

3. ASSIGNEE NAME AND RESIDENCE DATA TO BE PRINTED ON THE PATENT (print or type)

PLEASE NOTE: Unless an assignee is identified below, no assignee data will appear on the patent. If an assignee is identified below, the document must have been previously recorded, or filed for recordation, as set forth in 37 CFR 3.11 and 37 CFR 3.81(a). Completion of this form is NOT a substitute for filing an assignment.

(A) NAME OF ASSIGNEE (B) RESIDENCE: (CITY and STATE OR COUNTRY)

Please check the appropriate assignee category or categories (will not be printed on the patent) : ❑ Individual ❑ Corporation or other private group entity ❑ Government

4a. Fees submitted: ❑Issue Fee ❑Publication Fee (if required) ❑Advance Order - # of Copies _____

4b. Method of Payment: *(Please first reapply any previously paid fee shown above)*

❑ Electronic Payment via EFS-Web ❑ Enclosed check ❑ Non-electronic payment by credit card (Attach form PTO-2038)

❑ The Director is hereby authorized to charge the required fee(s), any deficiency, or credit any overpayment to Deposit Account No. _____

5. **Change in Entity Status** (from status indicated above)

❑ Applicant certifying micro entity status. See 37 CFR 1.29

❑ Applicant asserting small entity status. See 37 CFR 1.27

❑ Applicant changing to regular undiscounted fee status.

NOTE: Absent a valid certification of Micro Entity Status (see forms PTO/SB/15A and 15B), issue fee payment in the micro entity amount will not be accepted at the risk of application abandonment.
NOTE: If the application was previously under micro entity status, checking this box will be taken to be a notification of loss of entitlement to micro entity status.
NOTE: Checking this box will be taken to be a notification of loss of entitlement to small or micro entity status, as applicable.

NOTE: This form must be signed in accordance with 37 CFR 1.31 and 1.33. See 37 CFR 1.4 for signature requirements and certifications.

Authorized Signature _____ Date _____

Typed or printed name _____ Registration No. _____

UNITED STATES DEPARTMENT OF COMMERCE
United States Patent and Trademark Office
Address: COMMISSIONER FOR PATENTS
P.O. Box 1450
Alexandria, Virginia 22313-1450
www.uspto.gov

APPLICATION NO.	FILING DATE	FIRST NAMED INVENTOR	ATTORNEY DOCKET NO.	CONFIRMATION NO.
16/512,560	07/16/2019	Samuel English Anthony	35447-43490/US	6385

758 7590 12/04/2019
FENWICK & WEST LLP
SILICON VALLEY CENTER
801 CALIFORNIA STREET
MOUNTAIN VIEW, CA 94041

EXAMINER
BAKER, CHARLOTTE M

ART UNIT	PAPER NUMBER
2664	

DATE MAILED: 12/04/2019

Determination of Patent Term Adjustment under 35 U.S.C. 154 (b)
(Applications filed on or after May 29, 2000)

The Office has discontinued providing a Patent Term Adjustment (PTA) calculation with the Notice of Allowance.

Section 1(h)(2) of the AIA Technical Corrections Act amended 35 U.S.C. 154(b)(3)(B)(i) to eliminate the requirement that the Office provide a patent term adjustment determination with the notice of allowance. See Revisions to Patent Term Adjustment, 78 Fed. Reg. 19416, 19417 (Apr. 1, 2013). Therefore, the Office is no longer providing an initial patent term adjustment determination with the notice of allowance. The Office will continue to provide a patent term adjustment determination with the Issue Notification Letter that is mailed to applicant approximately three weeks prior to the issue date of the patent, and will include the patent term adjustment on the patent. Any request for reconsideration of the patent term adjustment determination (or reinstatement of patent term adjustment) should follow the process outlined in 37 CFR 1.705.

Any questions regarding the Patent Term Extension or Adjustment determination should be directed to the Office of Patent Legal Administration at (571)-272-7702. Questions relating to issue and publication fee payments should be directed to the Customer Service Center of the Office of Patent Publication at 1-(888)-786-0101 or (571)-272-4200.

OMB Clearance and PRA Burden Statement for PTOL-85 Part B

The Paperwork Reduction Act (PRA) of 1995 requires Federal agencies to obtain Office of Management and Budget approval before requesting most types of information from the public. When OMB approves an agency request to collect information from the public, OMB (i) provides a valid OMB Control Number and expiration date for the agency to display on the instrument that will be used to collect the information and (ii) requires the agency to inform the public about the OMB Control Number's legal significance in accordance with 5 CFR 1320.5(b).

The information collected by PTOL-85 Part B is required by 37 CFR 1.311. The information is required to obtain or retain a benefit by the public which is to file (and by the USPTO to process) an application. Confidentiality is governed by 35 U.S.C. 122 and 37 CFR 1.14. This collection is estimated to take 30 minutes to complete, including gathering, preparing, and submitting the completed application form to the USPTO. Time will vary depending upon the individual case. Any comments on the amount of time you require to complete this form and/or suggestions for reducing this burden, should be sent to the Chief Information Officer, U.S. Patent and Trademark Office, U.S. Department of Commerce, P.O. Box 1450, Alexandria, Virginia 22313-1450. DO NOT SEND FEES OR COMPLETED FORMS TO THIS ADDRESS. SEND TO: Commissioner for Patents, P.O. Box 1450, Alexandria, Virginia 22313-1450. Under the Paperwork Reduction Act of 1995, no persons are required to respond to a collection of information unless it displays a valid OMB control number.

Privacy Act Statement

The Privacy Act of 1974 (P.L. 93-579) requires that you be given certain information in connection with your submission of the attached form related to a patent application or patent. Accordingly, pursuant to the requirements of the Act, please be advised that: (1) the general authority for the collection of this information is 35 U.S.C. 2(b)(2); (2) furnishing of the information solicited is voluntary; and (3) the principal purpose for which the information is used by the U.S. Patent and Trademark Office is to process and/or examine your submission related to a patent application or patent. If you do not furnish the requested information, the U.S. Patent and Trademark Office may not be able to process and/or examine your submission, which may result in termination of proceedings or abandonment of the application or expiration of the patent.

The information provided by you in this form will be subject to the following routine uses:

1. The information on this form will be treated confidentially to the extent allowed under the Freedom of Information Act (5 U.S.C. 552) and the Privacy Act (5 U.S.C 552a). Records from this system of records may be disclosed to the Department of Justice to determine whether disclosure of these records is required by the Freedom of Information Act.
2. A record from this system of records may be disclosed, as a routine use, in the course of presenting evidence to a court, magistrate, or administrative tribunal, including disclosures to opposing counsel in the course of settlement negotiations.
3. A record in this system of records may be disclosed, as a routine use, to a Member of Congress submitting a request involving an individual, to whom the record pertains, when the individual has requested assistance from the Member with respect to the subject matter of the record.
4. A record in this system of records may be disclosed, as a routine use, to a contractor of the Agency having need for the information in order to perform a contract. Recipients of information shall be required to comply with the requirements of the Privacy Act of 1974, as amended, pursuant to 5 U.S.C. 552a(m).
5. A record related to an International Application filed under the Patent Cooperation Treaty in this system of records may be disclosed, as a routine use, to the International Bureau of the World Intellectual Property Organization, pursuant to the Patent Cooperation Treaty.
6. A record in this system of records may be disclosed, as a routine use, to another federal agency for purposes of National Security review (35 U.S.C. 181) and for review pursuant to the Atomic Energy Act (42 U.S.C. 218(c)).
7. A record from this system of records may be disclosed, as a routine use, to the Administrator, General Services, or his/her designee, during an inspection of records conducted by GSA as part of that agency's responsibility to recommend improvements in records management practices and programs, under authority of 44 U.S.C. 2904 and 2906. Such disclosure shall be made in accordance with the GSA regulations governing inspection of records for this purpose, and any other relevant (i.e., GSA or Commerce) directive. Such disclosure shall not be used to make determinations about individuals.
8. A record from this system of records may be disclosed, as a routine use, to the public after either publication of the application pursuant to 35 U.S.C. 122(b) or issuance of a patent pursuant to 35 U.S.C. 151. Further, a record may be disclosed, subject to the limitations of 37 CFR 1.14, as a routine use, to the public if the record was filed in an application which became abandoned or in which the proceedings were terminated and which application is referenced by either a published application, an application open to public inspection or an issued patent.
9. A record from this system of records may be disclosed, as a routine use, to a Federal, State, or local law enforcement agency, if the USPTO becomes aware of a violation or potential violation of law or regulation.

Notice of Allowability	Application No. 16/512,560	Applicant(s) Anthony et al.	
	Examiner CHARLOTTE M BAKER	Art Unit 2664	AIA (FITF) Status Yes

-- The MAILING DATE of this communication appears on the cover sheet with the correspondence address--

All claims being allowable, PROSECUTION ON THE MERITS IS (OR REMAINS) CLOSED in this application. If not included herewith (or previously mailed), a Notice of Allowance (PTOL-85) or other appropriate communication will be mailed in due course. **THIS NOTICE OF ALLOWABILITY IS NOT A GRANT OF PATENT RIGHTS.** This application is subject to withdrawal from issue at the initiative of the Office or upon petition by the applicant. See 37 CFR 1.313 and MPEP 1308.

1. ☑ This communication is responsive to amendment and termination disclaimer dated 11/19/2019.
   ☐ A declaration(s)/affidavit(s) under **37 CFR 1.130(b)** was/were filed on _____.

2. ☐ An election was made by the applicant in response to a restriction requirement set forth during the interview on _____; the restriction requirement and election have been incorporated into this action.

3. ☑ The allowed claim(s) is/are 1-22 . As a result of the allowed claim(s), you may be eligible to benefit from the **Patent Prosecution Highway** program at a participating intellectual property office for the corresponding application. For more information, please see **http://www.uspto.gov/patents/init_events/pph/index.jsp** or send an inquiry to **PPHfeedback@uspto.gov.**

4. ☐ Acknowledgment is made of a claim for foreign priority under 35 U.S.C. § 119(a)-(d) or (f).

   Certified copies:

   a) ☐ All b) ☐ Some *c) ☐ None of the:

   1. ☐ Certified copies of the priority documents have been received.
   2. ☐ Certified copies of the priority documents have been received in Application No. _____ .
   3. ☐ Copies of the certified copies of the priority documents have been received in this national stage application from the International Bureau (PCT Rule 17.2(a)).

   * Certified copies not received: _____ .

Applicant has THREE MONTHS FROM THE "MAILING DATE" of this communication to file a reply complying with the requirements noted below. Failure to timely comply will result in ABANDONMENT of this application.
THIS THREE-MONTH PERIOD IS NOT EXTENDABLE.

5. ☐ CORRECTED DRAWINGS (as "replacement sheets") must be submitted.
   ☐ including changes required by the attached Examiner's Amendment / Comment or in the Office action of Paper No./Mail Date _____ .

   Identifying indicia such as the application number (see 37 CFR 1.84(c)) should be written on the drawings in the front (not the back) of each sheet. Replacement sheet(s) should be labeled as such in the header according to 37 CFR 1.121(d).

6. ☐ DEPOSIT OF and/or INFORMATION about the deposit of BIOLOGICAL MATERIAL must be submitted. Note the attached Examiner's comment regarding REQUIREMENT FOR THE DEPOSIT OF BIOLOGICAL MATERIAL.

Attachment(s)

1. ☐ Notice of References Cited (PTO-892)
2. ☑ Information Disclosure Statements (PTO/SB/08), Paper No./Mail Date _____.
3. ☐ Examiner's Comment Regarding Requirement for Deposit of Biological Material _____.
4. ☐ Interview Summary (PTO-413), Paper No./Mail Date. _____.
5. ☐ Examiner's Amendment/Comment
6. ☑ Examiner's Statement of Reasons for Allowance
7. ☐ Other _____.

/CHARLOTTE M BAKER/
Primary Examiner, Art Unit 2664

DETAILED ACTION

Notice of Pre-AIA or AIA Status

1. The present application, filed on or after March 16, 2013, is being examined under the first inventor to file provisions of the AIA.

Allowable Subject Matter

2. Claims 1-22 are allowed.

3. The following is an examiner's statement of reasons for allowance: The prior art of record does not teach the claimed subject matter of claims 1, 10 and 19; therefore, claims 1, 10 and 19 are allowable for the reasons pointed out by Applicant's remarks dated 11/19/2019 and the Terminal Disclaimer dated 11/19/2019.

4. Any comments considered necessary by applicant must be submitted no later than the payment of the issue fee and, to avoid processing delays, should preferably accompany the issue fee. Such submission should be clearly labeled "Comments on Statement of Reasons for Allowance."

Conclusion

5. Any inquiry concerning this communication or earlier communications from the examiner should be directed to CHARLOTTE M BAKER whose telephone number is (571)272-7459. The examiner can normally be reached on Mon - Fri 8:00-5:00.

Examiner interviews are available via telephone, in-person, and video conferencing using a USPTO supplied web-based collaboration tool. To schedule an interview, applicant is encouraged to use the USPTO Automated Interview Request (AIR) at http://www.uspto.gov/interviewpractice.

If attempts to reach the examiner by telephone are unsuccessful, the examiner's supervisor, NAY A MAUNG can be reached on (571)272-7778. The fax phone number for the organization where this application or proceeding is assigned is 571-273-8300.

Information regarding the status of an application may be obtained from the Patent Application Information Retrieval (PAIR) system. Status information for published applications may be obtained from either Private PAIR or Public PAIR. Status information for unpublished applications is available through Private PAIR only. For more information about the PAIR system, see http://pair-direct.uspto.gov. Should you have questions on access to the Private PAIR system, contact the Electronic Business Center (EBC) at 866-217-9197 (toll-free). If you would like assistance from a USPTO Customer Service Representative or access to the automated information system, call 800-786-9199 (IN USA OR CANADA) or 571-272-1000.

/CHARLOTTE M BAKER/
Primary Examiner, Art Unit 2664

Search Notes	Application/Control No.	Applicant(s)/Patent Under Reexamination
	16/512,560	Anthony et al.
	Examiner	**Art Unit**
	CHARLOTTE M BAKER	2664

CPC - Searched*		
Symbol	**Date**	**Examiner**
G05D1/0088 OR G05D2201/0213 OR G05D1/0212 OR G05D1/0246 OR G06N20/00	08/13/2019	CMB

CPC Combination Sets - Searched*		
Symbol	**Date**	**Examiner**
G05D1/0088 OR G05D2201/0213 OR G05D1/0212 OR G05D1/0246 OR G06N20/00	08/13/2019	CMB

US Classification - Searched*			
Class	**Subclass**	**Date**	**Examiner**
382	104	11/23/2019	CMB

* See search history printout included with this form or the SEARCH NOTES box below to determine the scope of the search.

Search Notes		
Search Notes	**Date**	**Examiner**
Inventor Search	11/23/2019	CMB

Interference Search			
US Class/CPC Symbol	**US Subclass/CPC Group**	**Date**	**Examiner**
382	104	11/23/2019	CMB

/CHARLOTTE M BAKER/ Primary Examiner, Art Unit 2664	

TESLA EXHIBIT 1009 Page 140

Index of Claims	Application/Control No.	Applicant(s)/Patent Under Reexamination
	16/512,560	Anthony et al.
	Examiner	**Art Unit**
	CHARLOTTE M BAKER	2664

✓	Rejected	-	Cancelled	N	Non-Elected	A	Appeal
=	Allowed	÷	Restricted	I	Interference	O	Objected

CLAIMS

☑ Claims renumbered in the same order as presented by applicant ☐ CPA ☑ T.D. ☐ R.1.47

CLAIM		DATE								
Final	Original	11/23/2019								
	1	=								
	2	=								
	3	=								
	4	=								
	5	=								
	6	=								
	7	=								
	8	=								
	9	=								
	10	=								
	11	=								
	12	=								
	13	=								
	14	=								
	15	=								
	16	=								
	17	=								
	18	=								
	19	=								
	20	=								
	21	=								
	22	=								

Issue Classification	Application/Control No.	Applicant(s)/Patent Under Reexamination
	16/512,560	Anthony et al.
	Examiner	**Art Unit**
	CHARLOTTE M BAKER	2664

CPC

Symbol					Type	Version
G06K	/	9	/	6254	F	2013-01-01
G06N	/	3	/	08	I	2013-01-01
G06N	/	3	/	04	I	2013-01-01
G06K	/	9	/	00805	I	2013-01-01
G06K	/	9	/	6256	I	2013-01-01
G08G	/	1	/	166	I	2013-01-01
G08G	/	1	/	04	I	2013-01-01
G05D	/	1	/	0088	I	2013-01-01
G06K	/	9	/	00718	I	2013-01-01
B60W	/	30	/	00	I	2013-01-01
G06N	/	3	/	084	I	2013-01-01
G06K	/	9	/	00335	I	2013-01-01
G05D	/	2201	/	0213	A	2013-01-01
G06N	/	5	/	003	A	2013-01-01
G06N	/	20	/	10	A	2019-01-01

CPC Combination Sets

Symbol					Type	Set	Ranking	Version
	/		/					

NONE (Assistant Examiner)	(Date)	**Total Claims Allowed:** 22	
/CHARLOTTE M BAKER/ Primary Examiner, Art Unit 2664 (Primary Examiner)	23 November 2019 (Date)	O.G. Print Claim(s) 1	O.G. Print Figure 10

U.S. Patent and Trademark Office

Part of Paper No.: 20191123

Issue Classification	Application/Control No.	Applicant(s)/Patent Under Reexamination
	16/512,560	Anthony et al.
	Examiner	**Art Unit**
	CHARLOTTE M BAKER	2664

INTERNATIONAL CLASSIFICATION				
CLAIMED				
G06K	/	9	/	00

NON-CLAIMED				
	/		/	

US ORIGINAL CLASSIFICATION	
CLASS	**SUBCLASS**
382	104

CROSS REFERENCES(S)						
CLASS	**SUBCLASS (ONE SUBCLASS PER BLOCK)**					

NONE (Assistant Examiner)	(Date)	**Total Claims Allowed:** 22	
/CHARLOTTE M BAKER/ Primary Examiner, Art Unit 2664 (Primary Examiner)	23 November 2019 (Date)	O.G. Print Claim(s) 1	O.G. Print Figure 10

Issue Classification	Application/Control No.	Applicant(s)/Patent Under Reexamination
	16/512,560	Anthony et al.
	Examiner	**Art Unit**
	CHARLOTTE M BAKER	2664

☑ Claims renumbered in the same order as presented by applicant ☐ CPA ☑ T.D. ☐ R.1.47

CLAIMS

Final	Original	Final	Original	Final	Original	Final	Original	Final	Original	Final	Original	Final	Original	Final	Original
	1		10		19										
	2		11		20										
	3		12		21										
	4		13		22										
	5		14												
	6		15												
	7		16												
	8		17												
	9		18												

NONE (Assistant Examiner)	(Date)	**Total Claims Allowed:** 22	
/CHARLOTTE M BAKER/ Primary Examiner, Art Unit 2664 (Primary Examiner)	23 November 2019 (Date)	O.G. Print Claim(s) 1	O.G. Print Figure 10

U.S. Patent and Trademark Office

Part of Paper No.: 20191123

EAST Search History

EAST Search History (Prior Art)

Ref #	Hits	Search Query	DBs	Default Operator	Plurals	Time Stamp
L1	10	("0000002" | "10186123" | "20150213555" | "20170153639" | "20170270374" | "20180146198" | "7269516" | "8175333" | "8854457" | "9881221").PN.	US-PGPUB; USPAT	OR	ON	2019/11/23 12:00
L2	1	"16512560"	US-PGPUB; USPAT; USOCR; FPRS; EPO; JPO; DERWENT; IBM_TDB	OR	ON	2019/11/23 12:00

EAST Search History (Interference)

Ref #	Hits	Search Query	DBs	Default Operator	Plurals	Time Stamp
L3	2	(Samuel near2 English near2 Anthony).in. or (Kshitij near3 Misra).in. or (Avery near3 Wagner near3 Faller).in.	US-PGPUB; USPAT	OR	ON	2019/11/23 12:04
L4	136	((autonomous near2 vehicle) same (object with (road or highway or street or avenue))) and ((statistic$2) same (train$3))	US-PGPUB; USPAT	OR	ON	2019/11/23 12:05
L5	1	3 and 4	US-PGPUB; USPAT	OR	ON	2019/11/23 12:05
L6	0	3 and (382/104.ccls.)	US-PGPUB; USPAT	OR	ON	2019/11/23 12:05

11/23/2019 12:05:38 PM
C:\Users\cbaker\Documents\EAST\Workspaces\16512560.wsp

INFORMATION DISCLOSURE STATEMENT BY APPLICANT
(Not for submission under 37 CFR 1.99)

	Complete if Known
Application Number	16/512,560
Filing Date	July 16, 2019
First Named Inventor	Samuel English Anthony
Applicant	Perceptive Automata, Inc.
Art Unit	2664
Confirmation Number	6385
Examiner Name	Charlotte M. Baker
Attorney Docket Number	35447-43490/US

Sheet 1 of 3

U.S. PATENT DOCUMENTS				
		Document No.		
Examiner Initials*	Cite No.[1]	Number – Kind Code[2] (if known)	Publication Date MM-DD-YYYY	Name of Patentee or Applicant of Cited Document
	A1	US-10186123	01-22-2019	Kanaujia et al.
	A2	US-9881221	01-30-2018	Bala et al.
	A3	US-8854457	10-07-2014	De Vleeschouwer et al.
	A4	US-8175333	05-08-2012	Eaton et al.
	A5	US-7269516	09-11-2007	Brunner et al.
	A6	US-2018/0146198 A1	05-24-2018	Atluru et al.
	A7	US-2017/0270374 A1	09-21-2017	Myers et al.
	A8	US-2017/0153639 A1	06-01-2017	Stein
	A9	US-2015/0213555 A1	07-30-2015	Barfield, Jr., et al.

FOREIGN PATENT DOCUMENTS					
		Foreign Patent Document			
Examiner Initials*	Cite No.[1]	Country Code[3] – Number[4] Kind Code[5] (if known)	Publication Date MM-DD-YYYY	Name of Patentee or Applicant of Cited Document	T[6]
	B1				

OTHER REFERENCES – NON-PATENT LITERATURE DOCUMENTS			
Examiner Initials*	Cite No.[1]	Include name of the author (in CAPITAL LETTERS), title of the article (when appropriate), title of the item (book, magazine, journal, serial, symposium, catalog, etc.), date, page(s), volume-issue number(s), publisher, city and/or country where published	T[6]
	C1	GIRDHAR, R. and RAMANAN, D., "Attentional Pooling for Action Recognition," 31st Conference on Neural Information Processing Systems (NIPS 2017), 12 pages.	
	C2	HE, K., et al. "Mask R-CNN," Computer Vision and Pattern Recognition 1703.06870v3, January 24, 2018, 12 pages.	
	C3	International Search Report and Written Opinion, PCT Application No. PCT/US2018/063459, February 7, 2019, 13 pages.	

EXAMINER SIGNATURE	
Examiner Signature	/CHARLOTTE M BAKER/
Date Considered	11/23/2019

*EXAMINER: Initial if reference considered, whether or not citation is in conformance with MPEP 609. Draw line through a citation if not in conformance and not considered. Include copy of this form with next communication to applicant.

[1] Applicant's unique citation designation number (option). [2] See Kind Codes of USPTO Patent Documents at www.USPTO.GOV or MPEP 901.04. [3] Enter office that issued the document, by the two-letter code (WIPO Standard ST.3). [4] For Japanese patent documents, the indication of the year of the reign of the Emperor must precede the serial number of the patent document.

[5] Kind of document by the appropriate symbols as indicated on the document under WIPO Standard ST.16 if possible. [6] Applicant is to place a check mark here if English language translation is attached.

ALL REFERENCES CONSIDERED EXCEPT WHERE LINED THROUGH. /C.M.B/

INFORMATION DISCLOSURE STATEMENT BY APPLICANT (Not for submission under 37 CFR 1.99)				Complete if Known	
				Application Number	16/512,560
				Filing Date	July 16, 2019
				First Named Inventor	Samuel English Anthony
				Applicant	Perceptive Automata, Inc.
				Art Unit	2664
				Confirmation Number	6385
				Examiner Name	Charlotte M. Baker
Sheet	2	of	3	Attorney Docket Number	35447-43490/US

OTHER REFERENCES – NON-PATENT LITERATURE DOCUMENTS			
Examiner Initials*	Cite No.[1]	Include name of the author (in CAPITAL LETTERS), title of the article (when appropriate), title of the item (book, magazine, journal, serial, symposium, catalog, etc.), date, page(s), volume-issue number(s), publisher, city and/or country where published	T[6]
	C4	KARMARKAR, T., "Regional Proposal network (RPN)- Backbone of Faster R-CNN," August 18, 2018, 6 pages, [Online][Retrieved January 5, 2019], Retrieved from the internet <URL:https://medium.com/@tanaykarmarkar/region-proposal-network-rpn-bac>.	
	C5	KOTSERUBA, I., et al., "Joint Attention in Autonomous Driving (JADD),' Robotics 1609.04741v5, April 24, 2017, 10 pages.	
	C6	NEWELL, A., et al., "Stacked Hourglass Networks for Human Pose Estimation," Computer Vision and Pattern Recognition 1603.06937v2, July 26, 2016, 17 pages.	
	C7	REN, S. et al. "Faster R-CNN: Towards Real-Time Object Detection with Region Proposal Networks," Advances in Neural Information Processing Systems 28 (NIPS 2015), 9 pages.	
	C8	REN, S. et al. "Faster R-CNN: Towards Real-Time Object Detection with Region Proposal Networks," Computer Vision and Patteren Recognition 1506.01497v3, January 6, 2016, 14 pages.	
	C9	SANTORO, A. et al., "A neural approach to relational reasoning," June 6, 2017, 6 pages, [Online][Retrieved January 5, 2019], Retrieved from the internet <URL:https://deepmind.com/blog/neural-approach-relational-reasoning/>.	
	C10	SANTORO, A. et al., "A simple neural network module for relational reasoning," Computation and Language 1706.01427, June 5, 2017, 16 pages.	
	C11	SCHNEEMANN, F., et al., "Context-based Detection of Pedestrian Crossing Intention for Autonomous Driving in Urban Environments," 2016 IEEE/RSJ International Conference on Intelligent Robots and Systems (IROS), October 2016, 6 pages.	
	C12	WATTERS, N., et al., " Visual Interaction Networks," Computer Vision and Pattern Recognition 1706.01433v1, June 5, 2017, 14 pages.	
	C13	ZHAO, H., et al., "Pyramid Scheme Parsing Network," Computer Vision and Pattern Recognition 1612.01105v2, April 27, 2017, 11 pages.	

EXAMINER SIGNATURE		
Examiner Signature	/CHARLOTTE M BAKER/	
Date Considered	11/23/2019	

*EXAMINER: Initial if reference considered, whether or not citation is in conformance with MPEP 609. Draw line through a citation if not in conformance and not considered. Include copy of this form with next communication to applicant.

[1] Applicant's unique citation designation number (option). [2] See Kind Codes of USPTO Patent Documents at www.USPTO.GOV or MPEP 901.04. [3] Enter office that issued the document, by the two-letter code (WIPO Standard ST.3). [4] For Japanese patent documents, the indication of the year of the reign of the Emperor must precede the serial number of the patent document.

[5] Kind of document by the appropriate symbols as indicated on the document under WIPO Standard ST.16 if possible. [6] Applicant is to place a check mark here if English language translation is attached.

ALL REFERENCES CONSIDERED EXCEPT WHERE LINED THROUGH. /C.M.B/

INFORMATION DISCLOSURE STATEMENT BY APPLICANT (Not for submission under 37 CFR 1.99)				Complete if Known	
				Application Number	16/512,560
				Filing Date	July 16, 2019
				First Named Inventor	Samuel English Anthony
				Applicant	Perceptive Automata, Inc.
				Art Unit	2664
				Confirmation Number	6385
				Examiner Name	Charlotte M. Baker
Sheet	3	of	3	Attorney Docket Number	35447-43490/US

CERTIFICATION STATEMENT

Please see 37 CFR 1.97 and 1.98 to make the appropriate selection(s):

☐ That each item of information contained in the information disclosure statement was first cited in any communication from a foreign patent office in a counterpart foreign application not more than three months prior to the filing of the information disclosure statement. See 37 CFR 1.97(e)(1).

OR

☐ That no item of information contained in the information disclosure statement was cited in a communication from a foreign patent office in a counterpart foreign application, and, to the knowledge of the person signing the certification after making reasonable inquiry, no item of information contained in the information disclosure statement was known to any individual designated in 37 CFR 1.56(c) more than three months prior to the filing of the information disclosure statement. See 37 CFR 1.97(e)(2).

☐ See attached certification statement.

☐ The fee set forth in 37 CFR 1.17 (p) has been submitted herewith.

☒ A certification statement is not submitted herewith.

☒ **This application relies, under 35 U.S.C. § 120, on the earlier filing date of prior application No. 15/830,549, filed December 4, 2017 and the references C1-13 cited therein are hereby referenced, but are not required to be provided in this application under 37 CFR § 1.98(d).**

SIGNATURE

A signature of the applicant or representative is required in accordance with CFR 1.33, 10.18. Please see CFR 1.4(d) for the form of the signature.

Signature	/ Rajendra B. Panwar/	Date (YYYY-MM-DD)	2019-09-12
Name/Print	Rajendra B. Panwar	Registration Number	63,165

ALL REFERENCES CONSIDERED EXCEPT WHERE LINED THROUGH. /C.M.B/

PART B - FEE(S) TRANSMITTAL

Complete and send this form, together with applicable fee(s), by mail or fax, or via EFS-Web.

By mail, send to: Mail Stop ISSUE FEE
Commissioner for Patents
P.O. Box 1450
Alexandria, Virginia 22313-1450

By fax, send to: (571)-273-2885

INSTRUCTIONS: This form should be used for transmitting the ISSUE FEE and PUBLICATION FEE (if required). Blocks 1 through 5 should be completed where appropriate. All further correspondence including the Patent, advance orders and notification of maintenance fees will be mailed to the current correspondence address as indicated unless corrected below or directed otherwise in Block 1, by (a) specifying a new correspondence address; and/or (b) indicating a separate "FEE ADDRESS" for maintenance fee notifications.

CURRENT CORRESPONDENCE ADDRESS (Note: Use Block 1 for any change of address)

758 7590 12/04/2019
FENWICK & WEST LLP
SILICON VALLEY CENTER
801 CALIFORNIA STREET
MOUNTAIN VIEW, CA 94041

Note: A certificate of mailing can only be used for domestic mailings of the Fee(s) Transmittal. This certificate cannot be used for any other accompanying papers. Each additional paper, such as an assignment or formal drawing, must have its own certificate of mailing or transmission.

Certificate of Mailing or Transmission

I hereby certify that this Fee(s) Transmittal is being deposited with the United States Postal Service with sufficient postage for first class mail in an envelope addressed to the Mail Stop ISSUE FEE address above, or being transmitted to the USPTO via EFS-Web or by facsimile to (571) 273-2885, on the date below.

(Typed or printed name)

(Signature)

(Date)

APPLICATION NO.	FILING DATE	FIRST NAMED INVENTOR	ATTORNEY DOCKET NO.	CONFIRMATION NO.
16/512,560	07/16/2019	Samuel English Anthony	35447-43490/US	6385

TITLE OF INVENTION: SYSTEM AND METHOD OF PREDICTING HUMAN INTERACTION WITH VEHICLES

APPLN. TYPE	ENTITY STATUS	ISSUE FEE DUE	PUBLICATION FEE DUE	PREV. PAID ISSUE FEE	TOTAL FEE(S) DUE	DATE DUE
nonprovisional	SMALL	$500	$0.00	$0.00	$500	03/04/2020

EXAMINER	ART UNIT	CLASS-SUBCLASS
BAKER, CHARLOTTE M	2664	382-104000

1. Change of correspondence address or indication of "Fee Address" (37 CFR 1.363).

☐ Change of correspondence address (or Change of Correspondence Address form PTO/SB/122) attached.

☐ "Fee Address" indication (or "Fee Address" Indication form PTO/SB/47; Rev 03-09 or more recent) attached. **Use of a Customer Number is required.**

2. For printing on the patent front page, list
(1) The names of up to 3 registered patent attorneys or agents OR, alternatively,
(2) The name of a single firm (having as a member a registered attorney or agent) and the names of up to 2 registered patent attorneys or agents. If no name is listed, no name will be printed.

1 Fenwick & West LLP
2
3

3. ASSIGNEE NAME AND RESIDENCE DATA TO BE PRINTED ON THE PATENT (print or type)

PLEASE NOTE: Unless an assignee is identified below, no assignee data will appear on the patent. If an assignee is identified below, the document must have been previously recorded, or filed for recordation, as set forth in 37 CFR 3.11 and 37 CFR 3.81(a). Completion of this form is NOT a substitute for filing an assignment.

(A) NAME OF ASSIGNEE: Perceptive Automata, Inc.

(B) RESIDENCE: (CITY and STATE OR COUNTRY): Boston, MA

Please check the appropriate assignee category or categories (will not be printed on the patent) : ☐ Individual ☒ Corporation or other private group entity ☐ Government

4a. Fees submitted: ☒ Issue Fee ☐ Publication Fee (if required) ☐ Advance Order - # of Copies _____

4b. Method of Payment: *(Please first reapply any previously paid fee shown above)*

☒ Electronic Payment via EFS-Web ☐ Enclosed check ☐ Non-electronic payment by credit card (Attach form PTO-2038)

☒ The Director is hereby authorized to charge the required fee(s), any deficiency, or credit any overpayment to Deposit Account No. 192555

5. **Change in Entity Status** (from status indicated above)

☐ Applicant certifying micro entity status. See 37 CFR 1.29

☐ Applicant asserting small entity status. See 37 CFR 1.27

☐ Applicant changing to regular undiscounted fee status.

NOTE: Absent a valid certification of Micro Entity Status (see forms PTO/SB/15A and 15B), issue fee payment in the micro entity amount will not be accepted at the risk of application abandonment.
NOTE: If the application was previously under micro entity status, checking this box will be taken to be a notification of loss of entitlement to micro entity status.
NOTE: Checking this box will be taken to be a notification of loss of entitlement to small or micro entity status, as applicable.

NOTE: This form must be signed in accordance with 37 CFR 1.31 and 1.33. See 37 CFR 1.4 for signature requirements and certifications.

Authorized Signature /Rajendra Panwar/ Date February 28, 2020

Typed or printed name Rajendra B. Panwar Registration No. 63,165

Electronic Patent Application Fee Transmittal

Application Number:	16512560
Filing Date:	16-Jul-2019
Title of Invention:	SYSTEM AND METHOD OF PREDICTING HUMAN INTERACTION WITH VEHICLES
First Named Inventor/Applicant Name:	Samuel English Anthony
Filer:	Rajendra Bhagwatisingh Panwar/Natasha Pasciucco
Attorney Docket Number:	35447-43490/US

Filed as Small Entity

Filing Fees for Utility under 35 USC 111(a)

Description	Fee Code	Quantity	Amount	Sub-Total in USD($)
Basic Filing:				
Pages:				
Claims:				
Miscellaneous-Filing:				
Petition:				
Patent-Appeals-and-Interference:				
Post-Allowance-and-Post-Issuance:				
UTILITY APPL ISSUE FEE	2501	1	500	500

Description	Fee Code	Quantity	Amount	Sub-Total in USD($)
Extension-of-Time:				
Miscellaneous:				
			Total in USD ($)	**500**

Electronic Acknowledgement Receipt

EFS ID:	38729946
Application Number:	16512560
International Application Number:	
Confirmation Number:	6385
Title of Invention:	SYSTEM AND METHOD OF PREDICTING HUMAN INTERACTION WITH VEHICLES
First Named Inventor/Applicant Name:	Samuel English Anthony
Customer Number:	758
Filer:	Rajendra Bhagwatisingh Panwar
Filer Authorized By:	
Attorney Docket Number:	35447-43490/US
Receipt Date:	28-FEB-2020
Filing Date:	16-JUL-2019
Time Stamp:	17:40:58
Application Type:	Utility under 35 USC 111(a)

Payment information:

Submitted with Payment	yes
Payment Type	DA
Payment was successfully received in RAM	$500
RAM confirmation Number	E20202RH41349754
Deposit Account	192555
Authorized User	Rajendra Panwar

The Director of the USPTO is hereby authorized to charge indicated fees and credit any overpayment as follows:

37 CFR 1.16 (National application filing, search, and examination fees)

37 CFR 1.17 (Patent application and reexamination processing fees)

37 CFR 1.19 (Document supply fees)

37 CFR 1.20 (Post Issuance fees)

37 CFR 1.21 (Miscellaneous fees and charges)

File Listing:

Document Number	Document Description	File Name	File Size(Bytes)/ Message Digest	Multi Part /.zip	Pages (if appl.)
1	Issue Fee Payment (PTO-85B)	43490_IF.pdf	410134 d8292d57a319ba491b05e3cfeef0f52e915a2fcf	no	1
Warnings:					
Information:					
2	Fee Worksheet (SB06)	fee-info.pdf	30657 82e3d3426c13496ca0b8c63eafdcef332fcde93a	no	2
Warnings:					
Information:					
		Total Files Size (in bytes):	440791		

This Acknowledgement Receipt evidences receipt on the noted date by the USPTO of the indicated documents, characterized by the applicant, and including page counts, where applicable. It serves as evidence of receipt similar to a Post Card, as described in MPEP 503.

<u>New Applications Under 35 U.S.C. 111</u>
If a new application is being filed and the application includes the necessary components for a filing date (see 37 CFR 1.53(b)-(d) and MPEP 506), a Filing Receipt (37 CFR 1.54) will be issued in due course and the date shown on this Acknowledgement Receipt will establish the filing date of the application.
<u>National Stage of an International Application under 35 U.S.C. 371</u>
If a timely submission to enter the national stage of an international application is compliant with the conditions of 35 U.S.C. 371 and other applicable requirements a Form PCT/DO/EO/903 indicating acceptance of the application as a national stage submission under 35 U.S.C. 371 will be issued in addition to the Filing Receipt, in due course.
<u>New International Application Filed with the USPTO as a Receiving Office</u>
If a new international application is being filed and the international application includes the necessary components for an international filing date (see PCT Article 11 and MPEP 1810), a Notification of the International Application Number and of the International Filing Date (Form PCT/RO/105) will be issued in due course, subject to prescriptions concerning national security, and the date shown on this Acknowledgement Receipt will establish the international filing date of the application.

UNITED STATES PATENT AND TRADEMARK OFFICE

UNITED STATES DEPARTMENT OF COMMERCE
United States Patent and Trademark Office
Address: COMMISSIONER FOR PATENTS
P.O. Box 1450
Alexandria, Virginia 22313-1450
www.uspto.gov

APPLICATION NO.	ISSUE DATE	PATENT NO.	ATTORNEY DOCKET NO.	CONFIRMATION NO.
16/512,560	04/07/2020	10614344	35447-43490/US	6385

758 7590 03/18/2020

FENWICK & WEST LLP
SILICON VALLEY CENTER
801 CALIFORNIA STREET
MOUNTAIN VIEW, CA 94041

ISSUE NOTIFICATION

The projected patent number and issue date are specified above.

Determination of Patent Term Adjustment under 35 U.S.C. 154 (b)
(application filed on or after May 29, 2000)

The Patent Term Adjustment is 0 day(s). Any patent to issue from the above-identified application will include an indication of the adjustment on the front page.

If a Continued Prosecution Application (CPA) was filed in the above-identified application, the filing date that determines Patent Term Adjustment is the filing date of the most recent CPA.

Applicant will be able to obtain more detailed information by accessing the Patent Application Information Retrieval (PAIR) WEB site (http://pair.uspto.gov).

Any questions regarding the Patent Term Extension or Adjustment determination should be directed to the Office of Patent Legal Administration at (571)-272-7702. Questions relating to issue and publication fee payments should be directed to the Application Assistance Unit (AAU) of the Office of Data Management (ODM) at (571)-272-4200.

APPLICANT(s) (Please see PAIR WEB site http://pair.uspto.gov for additional applicants):

Samuel English Anthony, Cambridge, MA;
Perceptive Automata, Inc., Somerville, MA;
Kshitij Misra, Cambridge, MA;
Avery Wagner Faller, Cambridge, MA;

The United States represents the largest, most dynamic marketplace in the world and is an unparalleled location for business investment, innovation, and commercialization of new technologies. The USA offers tremendous resources and advantages for those who invest and manufacture goods here. Through SelectUSA, our nation works to encourage and facilitate business investment. To learn more about why the USA is the best country in the world to develop technology, manufacture products, and grow your business, visit SelectUSA.gov.

PATENT ASSIGNMENT COVER SHEET

Electronic Version v1.1
Stylesheet Version v1.2

EPAS ID: PAT7212104

SUBMISSION TYPE:	NEW ASSIGNMENT
NATURE OF CONVEYANCE:	ASSIGNMENT

CONVEYING PARTY DATA

Name	Execution Date
SAMUEL ENGLISH ANTHONY	09/05/2019
KSHITIJ MISRA	09/10/2019
AVERY WAGNER FALLER	10/08/2019

RECEIVING PARTY DATA

Name:	PERCEPTIVE AUTOMATA, INC.
Street Address:	ONE BOSTON PLACE, 201 WASHINGTON STREET, 35TH FLOOR
City:	BOSTON
State/Country:	MASSACHUSETTS
Postal Code:	02108

PROPERTY NUMBERS Total: 1

Property Type	Number
Application Number:	16512560

CORRESPONDENCE DATA

Fax Number: (650)938-5200

Correspondence will be sent to the e-mail address first; if that is unsuccessful, it will be sent using a fax number, if provided; if that is unsuccessful, it will be sent via US Mail.

Phone: 16509888500
Email: npasciucco@fenwick.com
Correspondent Name: RAJENDRA PANWAR
Address Line 1: 801 CALIFORNIA STREET
Address Line 2: FENWICK & WEST LLP
Address Line 4: MOUNTAIN VIEW, CALIFORNIA 94041

ATTORNEY DOCKET NUMBER:	35447-49691/US
NAME OF SUBMITTER:	RAJENDRA B. PANWAR, REG NO 63,165
SIGNATURE:	/Rajendra Panwar/
DATE SIGNED:	03/08/2022
	This document serves as an Oath/Declaration (37 CFR 1.63).

Total Attachments: 2
source=49691 US Executed Combined Declaration and Assignment(12349800.1)#page1.tif
source=49691 US Executed Combined Declaration and Assignment(12349800.1)#page2.tif

COMBINED ASSIGNMENT AND DECLARATION

For good and valuable consideration, the receipt of which is hereby acknowledged, the person(s) named below (referred to as "INVENTOR" whether singular or plural) has sold, assigned, and transferred and does hereby sell, assign, and transfer to **Perceptive Automata, Inc.**, a Delaware Corporation, having a place of business at **230 Somerville Ave, Somerville, MA 02143** ("ASSIGNEE"), for itself and its successors, transferees, and assignees, the following:

1. The entire worldwide right, title, and interest in all inventions and improvements ("SUBJECT MATTER") that are disclosed in any of the following patent application(s), Registered Community Design(s), international application(s) filed according to the Patent Cooperation Treaty (PCT), or U.S. national phase application(s) (collectively, the "APPLICATION"), and any patents issuing thereon ("PATENT RIGHTS"):

   - U.S. Application No. **16/512,560**, entitled **SYSTEM AND METHOD OF PREDICTING HUMAN INTERACTION WITH VEHICLES**, filed on **July 16, 2019**, which is a continuation of U.S. Application No. 15/830,549, filed on December 4, 2017, which claims priority from a provisional application, filed on July 5, 2017, now bearing U.S. Application No. 62/528,771.

2. The entire worldwide right, title, and interest in and to: (a) the APPLICATION; (b) all applications claiming priority from the APPLICATION; (c) all provisional, utility, divisional, continuation, substitute, renewal, reissue, and other applications related thereto that have been or may be filed in the United States or elsewhere in the world; (d) all patents (including reissues and re-examinations) that may be granted on the applications set forth in (a), (b), and (c) above; and (e) all right of priority in the APPLICATION and in any underlying provisional or foreign application, together with all rights to recover damages for infringement of provisional rights.

INVENTOR agrees that ASSIGNEE may apply for and receive patents for SUBJECT MATTER in ASSIGNEE's own name.

INVENTOR agrees to do the following, when requested, and without further consideration, in order to carry out the intent of this Assignment: (1) execute all oaths, assignments, powers of attorney, applications, and other papers necessary or desirable to fully secure to ASSIGNEE the rights, titles and interests herein conveyed; (2) communicate to ASSIGNEE all known facts relating to the SUBJECT MATTER; and (3) generally do all lawful acts that ASSIGNEE shall consider desirable for securing, maintaining, and enforcing worldwide patent protection relating to the SUBJECT MATTER and for vesting in ASSIGNEE the rights, titles, and interests herein conveyed. INVENTOR further agrees to provide any successor, assign, or legal representative of ASSIGNEE with the benefits and assistance provided to ASSIGNEE hereunder.

INVENTOR represents that INVENTOR has the rights, titles, and interests to convey as set forth herein, and covenants with ASSIGNEE that the INVENTOR has not made and will not

hereafter make any assignment, grant, mortgage, license, or other agreement affecting the rights, titles, and interests herein conveyed.

INVENTOR grants the attorney of record the power to insert on this Assignment any further identification that may be necessary or desirable in order to comply with the rules of the United States Patent and Trademark Office or other authority for recordation of this document.

This Assignment may be executed in one or more counterparts, each of which shall be deemed an original and all of which may be taken together as one and the same Assignment.

By signing below, INVENTOR further attests to the following:

- The APPLICATION was made or authorized to be made by INVENTOR.
- INVENTOR believes that INVENTOR is the original inventor or an original joint inventor of a claimed invention in the APPLICATION.

INVENTOR hereby acknowledges that any willful false statement made in this document is punishable under 18 U.S.C. 1001 by fine or imprisonment of not more than five (5) years, or both.

Name and Signature	Date of Signature (REQUIRED)
Samuel English Anthony	9/5/2019
Samuel English Anthony	

Name and Signature	Date of Signature (REQUIRED)
Kshitij Misra	9/10/2019
Kshitij Misra	

Name and Signature	Date of Signature (REQUIRED)
Avery Wagner Faller	10/8/2019
Avery Wagner Faller	