INTERNATIONAL STANDARD

ISO 13469

First edition
2014-07-01

Mechanical joining — Form-fit blind rivets and (lock) bolt joints — Specifications and qualification of testing procedures

Assemblage mécanique — Rivets aveugles et boulons à filetage autofreinant — Spécifications et qualification des modes opératoires d'essai

Reference number
ISO 13469:2014(E)

Stanley Black & Decker, Inc. - EX1018, Page001
IPR2025-01581 (Stanley Black & Decker v. Howmet)
© ISO 2014

COPYRIGHT PROTECTED DOCUMENT

© ISO 2014

All rights reserved. Unless otherwise specified, no part of this publication may be reproduced or utilized otherwise in any form or by any means, electronic or mechanical, including photocopying, or posting on the internet or an intranet, without prior written permission. Permission can be requested from either ISO at the address below or ISO's member body in the country of the requester.

ISO copyright office
Case postale 56 • CH-1211 Geneva 20
Tel. + 41 22 749 01 11
Fax + 41 22 749 09 47
E-mail copyright@iso.org
Web www.iso.org

Published in Switzerland

Stanley Black & Decker, Inc. - EX1018, Page002
IPR2025-01581 (Stanley Black & Decker v. Howmet)

© ISO 2014 – All rights reserved

Contents

Page

Foreword ... **iv**

1 Scope ... **1**

2 Normative references ... **1**

3 Terms and definitions ... **1**

4 Technical contents of the joining procedure specification (JPS) ... **2**
- 4.1 General ... 2
- 4.2 Related to the fastener manufacturer ... 3
- 4.3 Related to parent materials ... 3
- 4.4 Common to all joining processes ... 3

5 Requirements for joints ... **4**
- 5.1 General ... 4
- 5.2 Test specimen ... 4
- 5.3 Joining of assembly components, test pieces, or test specimens ... 4

6 Testing and examinations ... **4**
- 6.1 General ... 4
- 6.2 Visual examination ... 4
- 6.3 Macro-section/macroscopic examination ... 4
- 6.4 Tensile shear test ... 6
- 6.5 Cross tension test ... 8
- 6.6 Mechanized peel test ... 8
- 6.7 Fatigue and/or endurance tests ... 8

7 Re-testing ... **10**

8 Evaluation of the test results ... **11**

9 Single joint specimen test report ... **11**

Annex A (informative) **Examples of joining procedures for blind rivets and lock bolts** ... **12**

Annex B (informative) **Example of a test report** ... **15**

Bibliography ... **17**

Stanley Black & Decker, Inc. - EX1018, Page003
IPR2025-01581 (Stanley Black & Decker v. Howmet)

© ISO 2014 – All rights reserved

Foreword

ISO (the International Organization for Standardization) is a worldwide federation of national standards bodies (ISO member bodies). The work of preparing International Standards is normally carried out through ISO technical committees. Each member body interested in a subject for which a technical committee has been established has the right to be represented on that committee. International organizations, governmental and non-governmental, in liaison with ISO, also take part in the work. ISO collaborates closely with the International Electrotechnical Commission (IEC) on all matters of electrotechnical standardization.

The procedures used to develop this document and those intended for its further maintenance are described in the ISO/IEC Directives, Part 1. In particular the different approval criteria needed for the different types of ISO documents should be noted. This document was drafted in accordance with the editorial rules of the ISO/IEC Directives, Part 2 (see www.iso.org/directives).

Attention is drawn to the possibility that some of the elements of this document may be the subject of patent rights. ISO shall not be held responsible for identifying any or all such patent rights. Details of any patent rights identified during the development of the document will be in the Introduction and/or on the ISO list of patent declarations received (see www.iso.org/patents).

Any trade name used in this document is information given for the convenience of users and does not constitute an endorsement.

For an explanation on the meaning of ISO specific terms and expressions related to conformity assessment, as well as information about ISO's adherence to the WTO principles in the Technical Barriers to Trade (TBT) see the following URL: Foreword - Supplementary information

The committee responsible for this document is ISO/TC 44, *Welding and allied processes*, Subcommittee SC 6, *Resistance welding and allied mechanical joining*.

Stanley Black & Decker, Inc. - EX1018, Page004
IPR2025-01581 (Stanley Black & Decker v. Howmet)

© ISO 2014 – All rights reserved

Mechanical joining — Form-fit blind rivets and (lock) bolt joints — Specifications and qualification of testing procedures

1 Scope

This International Standard specifies the requirements for the testing procedures for interference-fit/form-fit blind rivet joints and lock bolt joints made of metallic and non-metallic materials.

The tests required for a particular joint depend upon the performance requirements of the component/assembly and shall be established before any testing is undertaken.

The term sheet as used in this International Standard includes extrusions, cast material, plastics, and fibre-reinforced plastics, e. g. carbon and glass fibre-reinforced plastics.

NOTE Specific service, material, or manufacturing conditions can require more comprehensive testing than specified in this International Standard. Such tests can include macro and micro sections, fatigue, and/or endurance tests.

This International Standard does not apply to civil engineering applications such as metal building and steel construction which are covered by other applicable International Standards.

2 Normative references

The following documents, in whole or in part, are normatively referenced in this document and are indispensable for its application. For dated references, only the edition cited applies. For undated references, the latest edition of the referenced document (including any amendments) applies.

ISO 12996, *Mechanical joining — Destructive testing of joints — Specimen dimensions and test procedure for tensile shear testing of single joints*

ISO 14588, *Blind rivets — Terminology and definitions*

ISO 16237, *Mechanical joining — Destructive testing of joints — Specimen dimensions and test procedure for cross-tension testing of single joints*

3 Terms and definitions

For the purposes of this document, the terms and definitions given in ISO 14588 and the following apply.

3.1
interference-fit joint
form-fit joint
property of a joint in which the transmission of external forces, in particular shear forces, is effected by geometrical elements which prevent the movement of the components relative to one another

Note 1 to entry: This condition is frequently achieved by the fastener's outer diameter surface having complete contact with the joint's component holes.

[SOURCE: ISO 12996:2013, 3.12 modified — Figure 1 has been added.]

Stanley Black & Decker, Inc. - EX1018, Page005
IPR2025-01581 (Stanley Black & Decker v. Howmet)

© ISO 2014 – All rights reserved

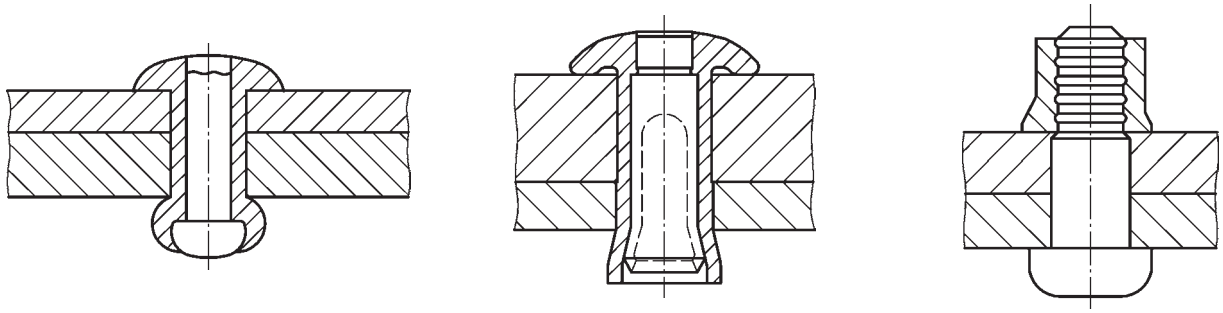

a) Blind rivet joint with bulbing blind head **b) Blind rivet joint with flaring blind head** **c) Lock bolt joint**

Figure 1 — Examples of interference-fit/form-fit joints

3.2
clearance-fit joint
force-fit joint
property of a joint in which external forces, in particular shear forces, are transmitted through friction and, if the force to be transmitted is greater than the frictional force, then frictional locking is overcome and the components move relative to one another

Note 1 to entry: This condition is frequently achieved by the fastener's outer diameter surface having incomplete contact with the joint's component holes.

[SOURCE: ISO 12996:2013, 3.13 modified — Figure 2 has been added.]

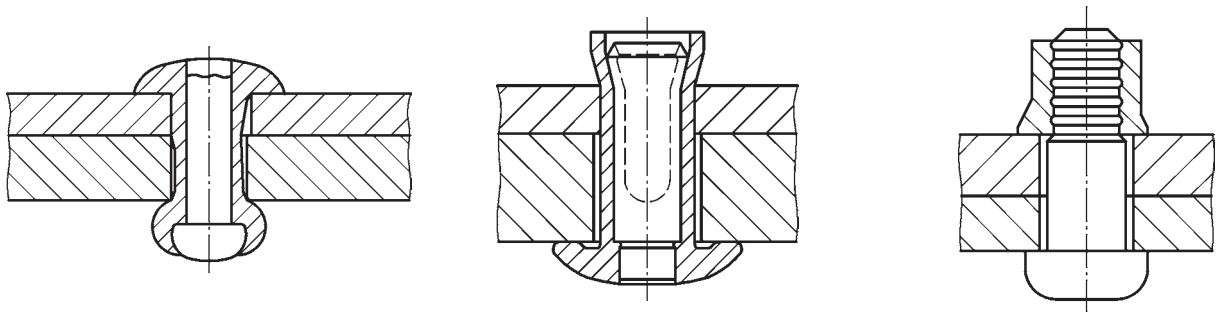

a) Blind rivet joint with bulbing head **b) Blind rivet joint with flaring blind head** **c) Lock bolt joint**

Figure 2 — Examples of clearance-fit/force-fit joints

3.3
clearance bridging capability
ability to fill the clearance between the rivet and the work piece to eliminate displacement in the shear plane

4 Technical contents of the joining procedure specification (JPS)

4.1 General

The performance of at least two samples of the joint to be tested shall be evaluated in accordance with the tests specified in this International Standard and the results recorded.

Stanley Black & Decker, Inc. - EX1018, Page006
IPR2025-01581 (Stanley Black & Decker v. Howmet)

© ISO 2014 – All rights reserved

The following variables affect the performance of the joints and shall be agreed upon by the contracting parties before testing:

— hole diameters in sheets;

— nominal and measured diameters of blind rivets and lock bolts;

— sheets thicknesses;

— mechanical properties of sheets, blind rivets, and lock bolts;

— degree of clearance in the rivet or lock bolt joint (see Figure 1 and Figure 2);

— percentages of the sheet thickness over which the clearances are bridged;

— methods of assembly of the joints.

The joining procedure specification (JPS) shall provide the necessary information required to make the joint. The minimum information required in a JPS for riveting processes is listed in 4.2 to 4.4.

For some applications, it might be necessary to supplement the list. All relevant information shall be specified in the JPS.

Permissible tolerance ranges shall be specified.

An example of a JPS form is shown in Annex B; these forms should be modified according to actual practice.

4.2 Related to the fastener manufacturer

— identification of the fastener manufacturer;

— identification of JPS.

4.3 Related to parent materials

4.3.1 Composition and characteristics of parent materials

— designation and type(s) of the material(s) and referenced standard(s);

— in the case of coating(s), material(s), types, thicknesses, location, single- or double-sided.

4.3.2 Dimension of parent materials/test pieces

— thickness of material(s);

— dimensions and cross section(s) of profile(s) or extrusion(s).

4.4 Common to all joining processes

4.4.1 Joining process

— Joining process(es) specified shall be designated as manual, mechanized, automated, or robotic.

4.4.2 Machine specification

— type of setting machine/equipment used and appropriate identification.

© ISO 2014 – All rights reserved

4.4.3 Joint design

The overlap, edge distance, distance between two hole axes, sequence and pattern, rivet or bolt design, type, and manufacturer shall be specified and comply with the appropriate standards and/or application, as applicable.

NOTE A sketch can be used showing the joint design/configuration.

5 Requirements for joints

5.1 General

The following tests for the joints shall be carried out in accordance with the design requirements.

5.2 Test specimen

The dimensions of the test specimens for tensile shear tests shall be in accordance with ISO 12996, for cross tension tests, in accordance with ISO/DIS 16237, for mechanized peel tests, see for example ISO 14270, and for fatigue tests, see for example ISO 18592.

For ease of testing, the use of specimens is to be given preference over the use of any cut pieces taken from actual components.

5.3 Joining of assembly components, test pieces, or test specimens

Preparation of assembly components, test pieces taken from an assembly, or test specimens and joining of the test pieces or specimens shall be carried out in accordance with the requirements specified.

6 Testing and examinations

6.1 General

The testing and examination can include both non-destructive and destructive tests.

The scope of examination shall be specified by the contracting parties before starting with the tests. These tests and examinations can include visual examination, macro-section, tensile-shear tests, cross-tension testing, fatigue testing, and/or ultrasonic examination.

6.2 Visual examination

The test pieces or specimens shall be visually examined to check the misalignment of holes and rivet head, rivet end, bolt head, or collar end prior to testing the test specimens.

6.3 Macro-section/macroscopic examination

Macroscopic examination of joint cross section shall be carried out at a suitable magnification to verify the presence or the elimination of clearances between rivet and the work piece component holes. The clearance or interference/form fit characteristics of rivet joints can be ascertained by the examination of macrographs of cross section of the joints.

Towards this purpose, sections, normal to the mechanical fastener axis, shall be made 0,5 mm from the faying surface or in the middle of the sheet thickness, whichever is smaller. The sections shall show the

Stanley Black & Decker, Inc. - EX1018, Page008
IPR2025-01581 (Stanley Black & Decker v. Howmet)

© ISO 2014 – All rights reserved

amount of clearance or absence of radial play between the components of the rivet and the work piece hole. Examples of such macro-sections are shown in Figure 3 and Figure 4.

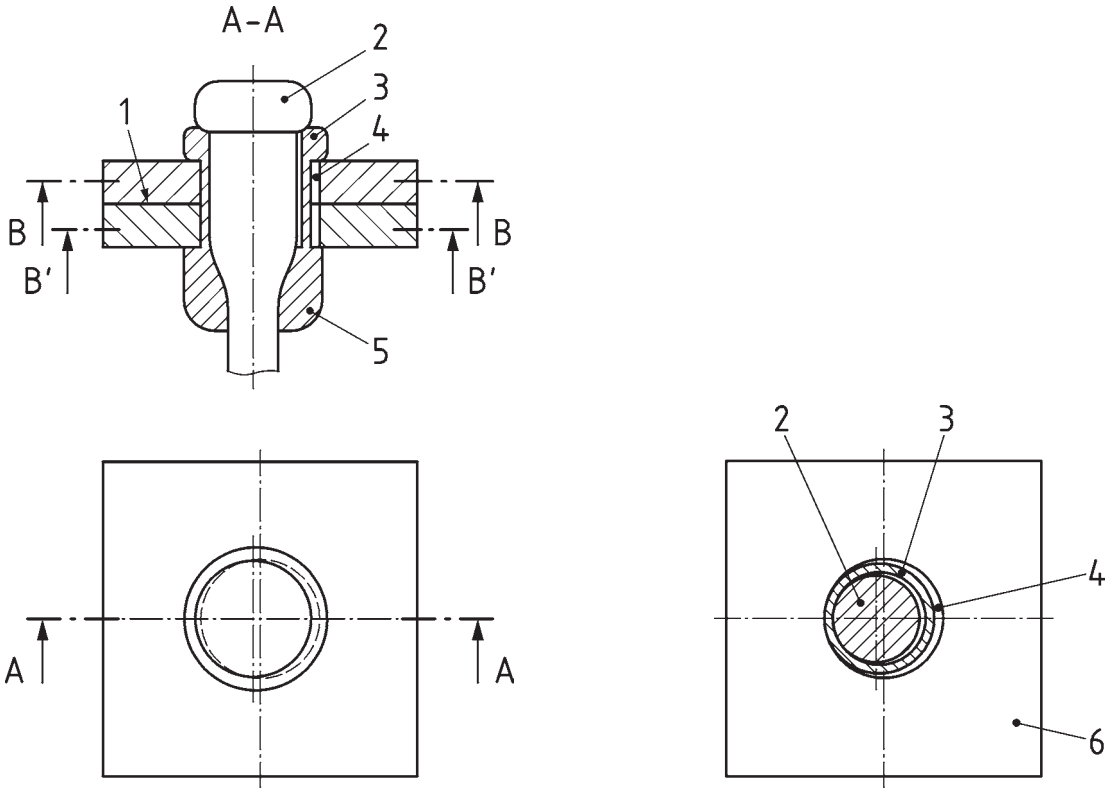

a) A–A cross section (body = sleeve + collar) and top view

b) B–B cross section or B′–B′ cross section

Key

1 faying surface
2 mandrel
3 sleeve
4 clearance
5 collar
6 sheet

Figure 3 — An example of a clearance-fit/force-fit blind rivet joint

© ISO 2014 – All rights reserved

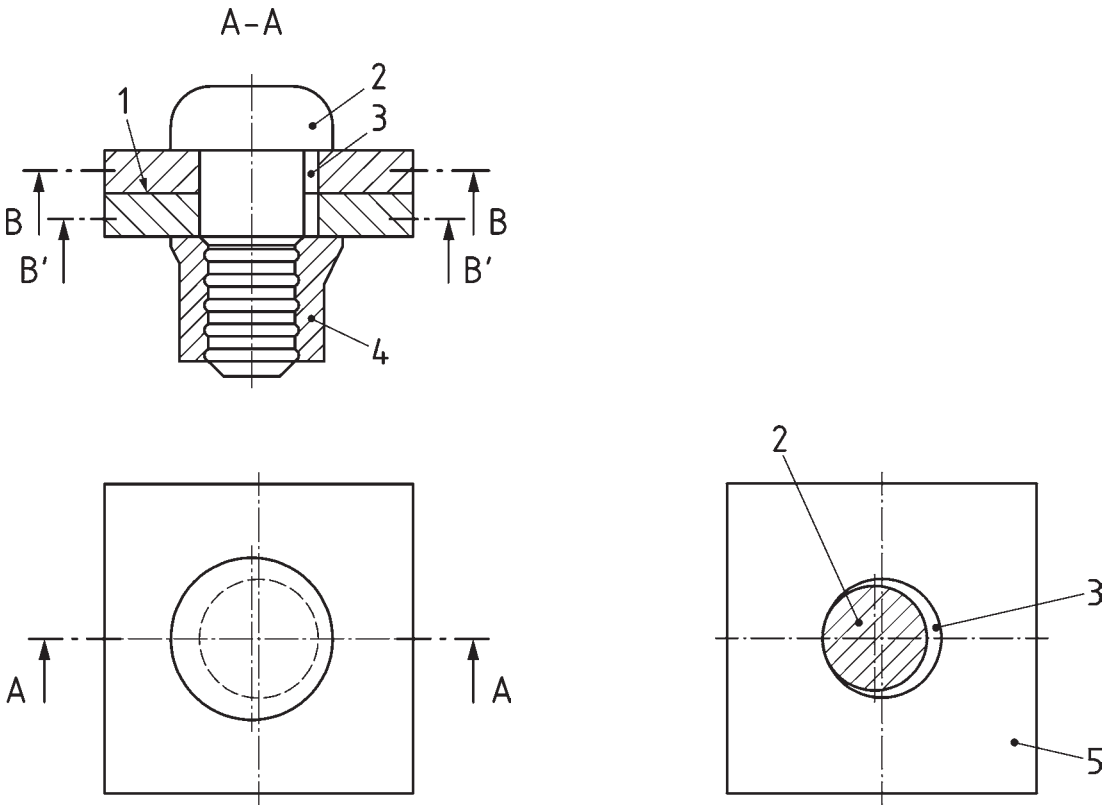

a) A–A cross section and top view

b) B–B cross section or B′–B′ cross section

Key

1 faying surface
2 pin
3 clearance
4 collar
5 sheet

NOTE The lock bolt is a combination of the pin and collar.

Figure 4 — An example of a clearance-fit/force-fit lock bolt joint

6.4 Tensile shear test

Tensile shear testing of the joined specimen shall be carried out in accordance with ISO 12996 as shown in Figure 5 a) and Figure 5 b).

NOTE 1 If identical test results can be achieved by other measures, shim plates can be omitted (e.g. by self-aligning clamps).

Stanley Black & Decker, Inc. - EX1018, Page010
IPR2025-01581 (Stanley Black & Decker v. Howmet)

© ISO 2014 – All rights reserved

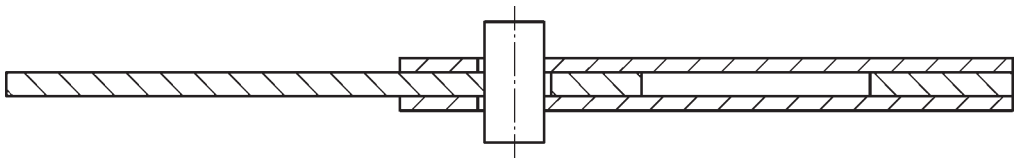

a) Double-shear test specimen

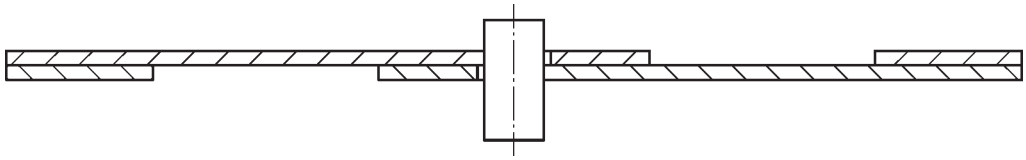

b) Single-shear test specimen

Figure 5 — Double-shear and single-shear lap test specimens

NOTE 2 Figure 5 shows the specimens before the actual setting operation, i.e. the rivet or lock bolt have been inserted into the bores but not set.

Possibilities of testing are shown in Figure 6.

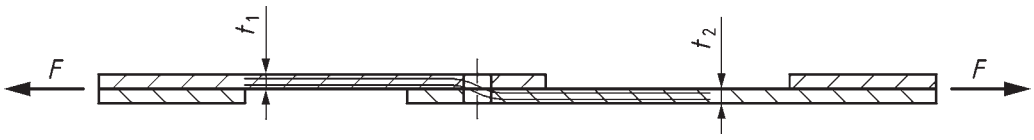

a) At the start of the tensile shear test

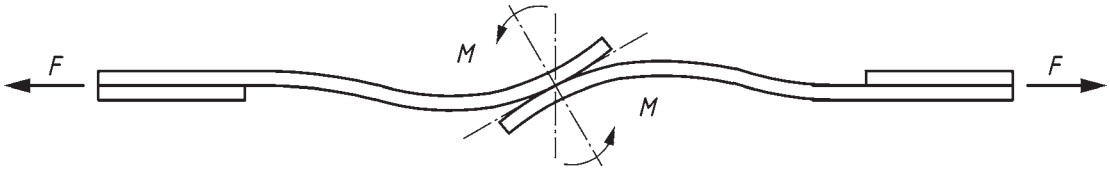

b) During the tensile shear test

Figure 6 — Schematic illustration showing the deformation of a single-shear lap specimen due to the deflection of the force lines under tensile load

If slipping occurs during the testing, this will show up in the force vs. elongation diagram as is to be seen in Figure 7. The corresponding force, F_S, shall be recorded in the test report or the JPQR.

NOTE 3 Slippage can occur in single and multiple fastener assemblies.

Stanley Black & Decker, Inc. - EX1018, Page011
IPR2025-01581 (Stanley Black & Decker v. Howmet)

© ISO 2014 – All rights reserved

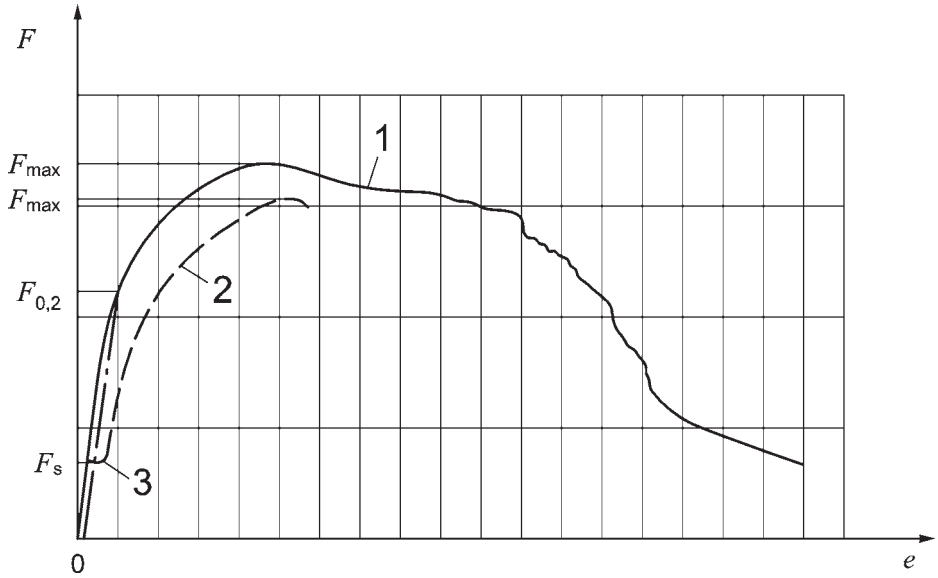

Key

e	elongation
F	force
F_{max}	maximum force (tensile shear strength of the specimen)
F_s	slippage load
$F_{0,2}$	yield load
1	rivet joint showing no slippage
2	joint showing slippage
3	slippage (an abrupt change in elongation)

Figure 7 — Example of load/displacement diagrams for tensile shear specimens

NOTE The time-force traces obtained during tensile testing can also supply additional information as indicated in Figure 7; see also Figure 8.

6.5 Cross tension test

Cross tension testing can be carried out, e.g. see ISO 16237.

6.6 Mechanized peel test

Peel testing can be carried out, e.g. see ISO 14270.

6.7 Fatigue and/or endurance tests

6.7.1 General

Fatigue testing with single joint specimens can be carried out with tensile shear specimens (see ISO 18592 and ISO 14324).

The fatigue tests can be carried out with different load ratios, R. The single-shear joint specimens are, however, especially in the case of thinner sheet material, not suitable for tests in which compressive loads are employed, e.g. $R = -1$, or for variable amplitude tests.

Stanley Black & Decker, Inc. - EX1018, Page012
IPR2025-01581 (Stanley Black & Decker v. Howmet)

© ISO 2014 – All rights reserved

The length between the two clamps shall be the same for the specimens being compared.

NOTE The dimensions for the specimen width and the overlap have been specified to ensure the data generated is usable for design purposes. Smaller widths and overlap could result in lower values and, thus, give misleading information. Shorter coupons can be used depending on the clamps of the testing equipment.

6.7.2 Cyclic load tests

The cyclic load tests for determining the slippage load can be performed as constant amplitude mode tests.

If slippage is detected during the tensile shear tests (see the force vs. elongation diagram in Figure 7 and Figure 8) performed prior to the fatigue tests, the force level at which slippage will occur in fatigue tests will, due to the influence of vibration which reduces friction and the so-called stick-slip effect, generally be lower.

The contracting parties shall agree on the following:

— F_{max};

— F_{min};

— load ratio;

— load increment;

— figures for repeating of the test.

Figure 8 shows a load vs. elongation diagram of a tensile shear test and constant amplitude fatigue tests with different load ratios. The fatigue behaviour of riveted specimens should be investigated under load conditions as they are to be expected in the field. Examples of such tests with different load ratios are shown in Figure 8.

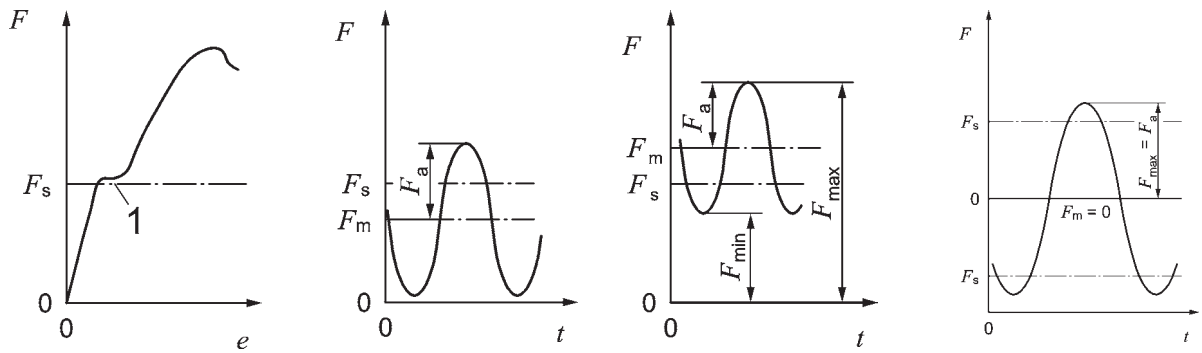

a) Tensile shear test **b 1) Case I** **b 2) Case II** **b 3) Case III**

b) Cyclic load tests

Key

e	elongation	F_{min}	minimum load
F	force	F_s	slippage load
F_a	load amplitude	t	time
F_m	mean load	1	slippage
F_{max}	maximum load		

Figure 8 — Cyclic fatigue tests with different load ratios

Stanley Black & Decker, Inc. - EX1018, Page013
IPR2025-01581 (Stanley Black & Decker v. Howmet)

© ISO 2014 – All rights reserved

NOTE For the terms and definitions for the fatigue test, see ISO 18592.

Case I: Load ratio $R = 0{,}1 = (R = F_{min}/F_{max})$, as shown in Figure 8 b 1)

The mean load, F_m, is applied and then the load amplitude, F_a, is super-imposed. During the actual cyclic test, friction lock or the slippage load level, F_s, is exceeded in the first load cycle and, therefore, goes unnoticed.

Case II: Load ratio $R = 0{,}6$, as shown in Figure 8 b 2)

Since the mean load is higher than the friction locking limit or slippage load, F_s, this is exceeded during the application of the mean load, F_m.

During the actual cyclic test, no further slipping is registered and, therefore, goes unnoticed.

Case III: Load ratio $R = -1$ (alternating load), as shown in Figure 8 b 3)

The load amplitude, F_a, is greater than the slippage load, F_s.

Play is overcome in each load cycle because both the negative F_a and the positive load amplitudes ($-F_a$; $+F_a$) are higher than the slippage load, F_s.

Results from single joint tests should not be used to predict the behaviour of similar joints in assemblies on a one-to-one basis. See also 6.4.

Since such fatigue tests are generally carried out as constant amplitude tests, the load amplitude will remain constant, even though the integrity of the joint has deteriorated. In order to determine the occurrence of slippage, the displacement amplitude should be monitored as this changes when slippage occurs.

In order to obtain universally comparable test results, independent of the type of testing equipment, the use of a failure criterion applicable on all types of testing equipment is recommended, e.g. relative or percentage stiffness loss which shows a very good correlation with the deterioration of the integrity of the joint during testing.

If a magnetically actuated resonance-type testing machine is used for the tests with negative load ratios, R, i.e. tests with alternating loads, the test will generally be terminated by the machine because the controls cannot ensure constant force amplitudes when slipping occurs.

If servo-hydraulic or mechanically actuated testing machines are used, the test will not be terminated automatically if slipping occurs. This will, however, be accompanied by an increase in noise level.

6.7.3 Failure criterion in fatigue testing

The test shall be terminated when

a) a slipping or permanent setting occurs,

b) a 40 % increase in the displacement amplitude is registered, or

c) a criterion agreed-upon prior to the beginning of the test is fulfilled.

7 Re-testing

If the component or test piece fails to comply with the requirements for visual examination, one further component or test piece shall be tested after adjustment of the joining equipment. If the test results of this additional component or test piece also do not comply with the requirements, the joining procedure test has failed.

If any test specimen fails to comply with the requirements for destructive tests, two further specimens shall be tested. Each additional test specimen shall be subjected to the same tests as the failed test

Stanley Black & Decker, Inc. - EX1018, Page014
IPR2025-01581 (Stanley Black & Decker v. Howmet)

© ISO 2014 – All rights reserved

specimen. If either of the additional test specimens does not comply with the requirements, the joining procedure test has failed.

8 Evaluation of the test results

The evaluation of the joining procedure shall consider the results of the tensile shear tests, the sheet material thicknesses, the material data, hole diameters, and yield and maximum loads. In the case of fatigue tests, the evaluation shall consider, in addition, the maximum load, F_{max}, amplitude at the endurance limit, the slope of the $F - N$ curve and the scatter in the results, and the failure criterion applied. The slope of the $F - N$ curve or the k-value is a measure for the notch sensitivity of the joints. A flat $F - N$ curve or large k-value denotes low notch sensitivity.

9 Single joint specimen test report

The following items shall be included in a joining procedure qualification record (JPQR) as a minimum requirement:

a) a reference to this International Standard (i.e. ISO 13469);

b) joining equipment;

c) joining conditions;

d) designation of the materials and sheet thicknesses;

e) rivet type used and size;

f) hole diameters in the test pieces or specimens;

g) size of gaps or clearances (see Figure 3 and Figure 4) in the macroscopic examination;

h) tensile shear strength (F_{max}) and the failure mode;

i) yield load ($F_{0,2}$);

j) slippage load (F_s)

k) stiffness of specimen;

l) maximum load (F_{max}) for fatigue tests;

m) load ratio (R);

n) peel strength or cross-tension strength and the failure mode, if applicable;

o) fatigue strength or endurance limit, if applicable;

p) detail of test procedure and measuring equipment, etc. used;

q) evaluation of the joining procedure;

r) any additional remarks and any deviations from this International Standard.

A JPQR-form shown in Annex B as an example can be used for entering details of the joining process and test results.

© ISO 2014 – All rights reserved

Annex A
(informative)

Examples of joining procedures for blind rivets and lock bolts

A.1 Equipment for the joining

Standard setting equipment can be used. The recommendations of the mechanical fastener manufacturer should be considered.

A.2 Joining procedures/joining processes

A.2.1 Blind rivets setting operation — State-of-the-art blind rivets

During the setting operation, the blind rivet is inserted into the common hole in the specimen, the rivet body coming to bear on the accessible sheet surface. Pre-installation clearance hole diameters and permissible tolerances shall be specified by the rivet manufacturer. The specimen is prepared as specified in 5.2 and 5.3.

The mandrel is inserted into the nose piece of the setting tool which applies a pulling force to it. The mandrel head is pulled against the rivet sleeve, expanding or folding it, and at the same time clamping the sheets together. The setting force increases with the pulling action until such time that the mandrel fractures at the neck breaker or at a predetermined point and the broken-off mandrel is disposed of. The setting operation is completed. See Figure A.1.

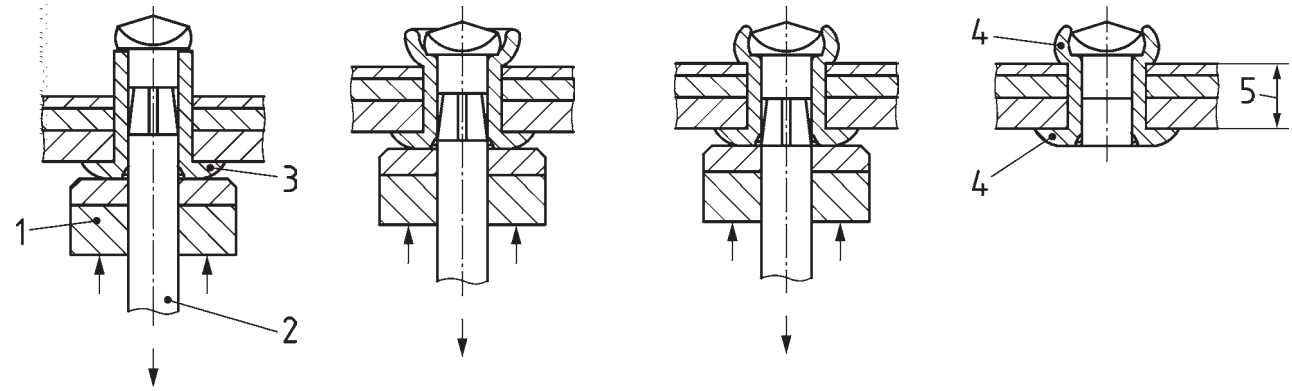

Key

1 nose piece
2 mandrel
3 rivet body
4 blind rivet head side
5 grip range

Figure A.1 — Blind rivet setting sequence illustration

In some cases, there is no breaker groove and the shaft does not fracture. In most blind rivet joints, the body sleeve alone is responsible for the clamping force and, thus, for the transmission of shear loads.

Stanley Black & Decker, Inc. - EX1018, Page016
IPR2025-01581 (Stanley Black & Decker v. Howmet)
© ISO 2014 – All rights reserved

A.2.2 Lock bolts

A.2.2.1 Setting operation — Clearance-fit lock bolts

During the setting operation, the pin of the lock bolt is inserted into the common hole in the specimen and the collar or lock nut, if applicable, slipped over the opposite end of the pin. The nose piece of the setting tool grips the grooved portion of the pin and applies a pulling force, clamping the sheets of the specimen with a high clamping force. When the force is high enough, the pin suffers elastic elongation, the mouth of the nose piece forcing the material of the collar to flow into the locking grooves of the pin shaft, locking the collar with the pin. When the pulling force is high enough, the pin fractures at the break neck and the setting operation is completed.

In some cases, the length of the pin gripped by the setting tool is shorter and the pin has no break neck. The operation is completed after the swaging of the collar, but without fracturing the pin.

A.2.2.2 Setting operation — Lock bolts with interference-fit/form-fit

The setting operation of lock bolts with interference fit is similar to that of lock bolts with clearance fit. In the case of lock bolts with interference fit, a section of the pin shaft adjacent to the pin head has an interference fit with the holes in the specimen. When the pin is drawn into the hole in the specimen, the interference fit section of the pin displaces “surplus” component material in such a manner, that a premature fracturing of the pin is avoided. The design of the pin is such, that the setting operation can be completed, ensuring a form, and force fit joint, without the pin prematurely fracturing at the break neck due to excessive force requirements.

In some cases, there is no breaker groove and the pin shaft does not fracture, and other methods for the retention of the pin can be employed.

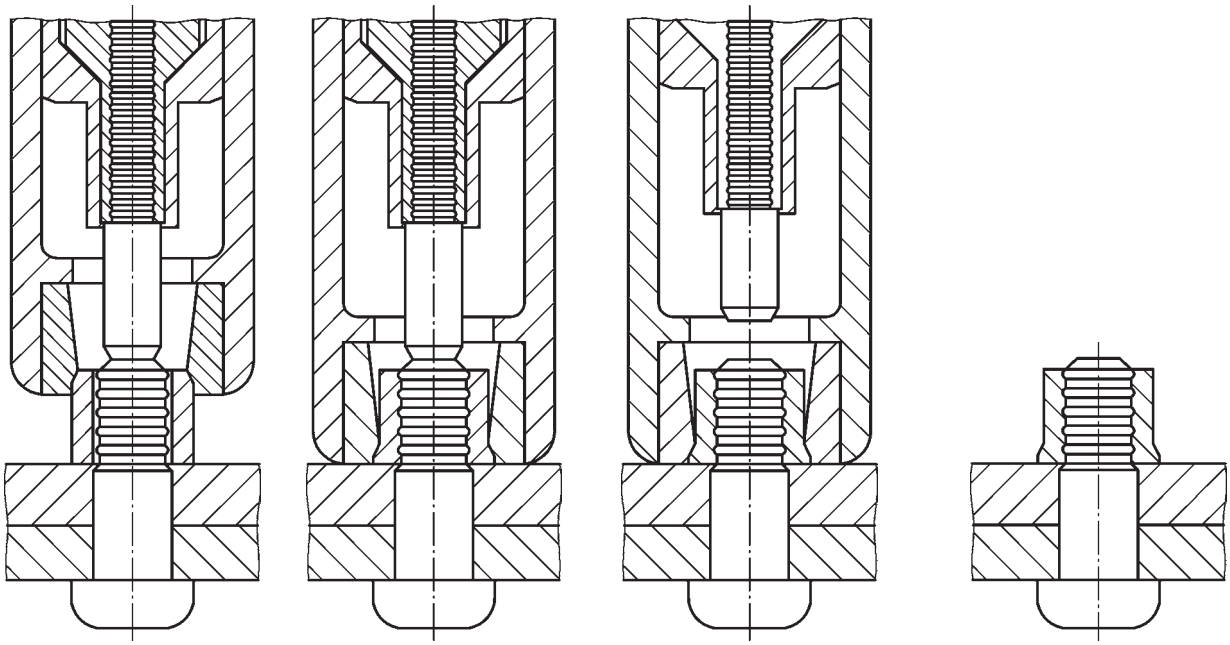

Figure A.2 — Lock bolt setting sequence illustration

A.2.3 Basic procedures for the preparation of test specimens

All coupons of a specimen shall be drilled in one operation. The use of suitable templates, as well as the deburring of the holes, is recommended. In the case of holes with a diameter larger than 5 mm, the holes

Stanley Black & Decker, Inc. - EX1018, Page017
IPR2025-01581 (Stanley Black & Decker v. Howmet)

© ISO 2014 – All rights reserved

shall be drilled in at least two steps, the diameter of the last but one drill not being smaller than 0,5 mm of the final diameter.

When joining the specimen, position the coupons as shown in Figure 5 a) and Figure 5 b). Insert the mechanical fastener through the drilled holes and apply a low force opposing the direction of the force applied during the test, so that the walls of the work piece hole are in contact on opposing sides of the shaft or sleeve. Apply adhesive tape to fix the coupons in this position and set rivet using the equipment specified by the fastener manufacturer.

Due to their hole-fill or clearance bridging capability, suitable blind rivets and lock bolts for making interference or form-fit joints will, when bridging the existing clearances, automatically tend to centre themselves in the holes and easily overcome the resistance posed by the adhesive tape.

Clearances between rivet shank and hole, as specified for state-of-the-art fasteners, can be bridged with interference- or form-fit designs. Improved gap-bridging and load-carrying properties will generally be possible depending on the substrate materials and their thicknesses. In the case of such requirements, the selection of the appropriate lock bolts should be made in close collaboration with the manufacturer. It is recommended to perform corresponding qualifying tests.

The allowable tolerance of the clearance hole diameter will depend on the specimen material and its thickness. In the case of softer materials and thinner components, the hole can be larger than for harder materials. It is advisable to consult the rivet manufacturer for specific information because this data depends on the design of the rivet.

NOTE The pin shaft can be smooth or have radial grooves to be able to exert higher pulling forces. At least a part of the pin shaft, between the break neck and the head, will have a diameter larger than the core diameter.

Stanley Black & Decker, Inc. - EX1018, Page018
IPR2025-01581 (Stanley Black & Decker v. Howmet)

© ISO 2014 – All rights reserved

Annex B
(informative)

Example of a test report

Joining procedure specification and testing specification

No.:_____

Issue: _____

Date: _____

Revision: ____

Manufacturer or supplier:

Product: _____

Description: _____ Product identification no.: _____

Assembly name: _____ Assembly no.: _____

Joint location: _____

Number/identification code: _____ Joint type: _____

Material(s) thickness: _____

Condition/Heat treatment: _____

Coating(s): _____

Fastener specification: _____

Diameter: _____

Gripping range: _____

Tightening or setting machine: _____

Machine type: _____ Machine identification no.: _____

Tightening or setting parameters: _____

Max. setting force: _____

Stroke: _____

Monitored parameters: _____

Force: _____

Displacement: _____

Testing machine

Identification no.: _____

Operator: _____

Stanley Black & Decker, Inc. - EX1018, Page019
IPR2025-01581 (Stanley Black & Decker v. Howmet)

© ISO 2014 – All rights reserved

Date: _____

Type of test: _____

Slipping load: _____ Yield load max. load: _____

Failure criterion: _____

Stanley Black & Decker, Inc. - EX1018, Page020
IPR2025-01581 (Stanley Black & Decker v. Howmet)

© ISO 2014 – All rights reserved

Bibliography

[1] ISO 14270, *Specimen dimensions and procedure for mechanized peel testing resistance spot, seam and embossed projection welds*

[2] ISO 14324, *Resistance spot welding — Destructive tests of welds — Method for the fatigue testing of spot welded joints*

[3] ISO 14589, *Blind rivets — Mechanical testing*

[4] ISO 15607, *Specification and qualification of welding procedures for metallic materials — General rules*

[5] ISO 18592, *Resistance welding — Destructive testing of welds — Method for the fatigue testing of multi-spot-welded specimens*

© ISO 2014 – All rights reserved

ICS 25.160.40;25.160.10
Price based on 17 pages

© ISO 2014 – All rights reserved

Stanley Black & Decker, Inc. - EX1018, Page022
IPR2025-01581 (Stanley Black & Decker v. Howmet)