UNITED STATES PATENT AND TRADEMARK OFFICE

BEFORE THE PATENT TRIAL AND APPEAL BOARD

Stanley Black & Decker, Inc.,
Petitioner,

v.

Howmet Aerospace Inc.,
Patent Owner.

Case No. IPR2025-01581
Patent No. 11,885,358

PATENT OWNER'S PRELIMINARY RESPONSE

TABLE OF CONTENTS

I. INTRODUCTION 1

II. BACKGROUND 1

A. The ’358 Patent 1

B. Parallel District Court Litigation 5

C. POSITA Level 6

III. GROUND A: A POSITA WOULD NOT HAVE BEEN MOTIVATED TO MODIFY CORBETT IN VIEW OF BREWER AS DOING SO WOULD CHANGE CORBETT’S PRINCIPLE OF OPERATION AND RENDER IT UNSATISFACTORY FOR ITS INTENDED PURPOSE 6

A. Petitioner’s *Graham* Analysis Is Defective 7

B. Petitioner contends Corbett’s pull portion has shortcomings that necessitate a change to Brewer’s pull portion arrangement 9

C. A POSITA would not have applied Brewer’s non-blind fastener teachings to Corbett’s blind fastener as doing so would require a complete redesign of Corbett’s fastener and would render Corbett unsatisfactory for its intended purpose. 11

IV. GROUND B: PETITIONER’S GROUND B DOES NOT SAVE GROUND A 25

V. GROUND C: A POSITA WOULD NOT HAVE MODIFIED KLEINMAN IN VIEW OF BREWER AS TO DO SO WOULD CHANGE KLEINMAN’S PRINCIPLE OF OPERATION 26

A. Ground C applies art already considered by the Office 26

B. Petitioner’s Ground C does not apply the *Graham* factors 26

C. Petitioner’s obviousness proposal applies Brewer’s disparate non-blind lockbolt teachings to Kleinman’s blind fastener 27

D. Overview of Kleinman’s Blind Fastener 27

E. A POSITA would not have applied Brewer's non-blind fastener teachings to Kleinman's blind fastener 31

VI. GROUND D: PETITIONER'S GROUND D DOES NOT SAVE GROUND C 38

VII. CONCLUSION 39

LIST OF EXHIBITS

Exhibit	Description
2001	International Patent Application Publication No. WO2004/102016 ("PCT-Kleinman")
2002	Redline comparison of specification of PCT-Kleinman to specification of Ex-1006, US2006/0251490 ("Kleinman")
2003	International Patent Application Publication No. WO2015/033330 ("PCT-Brewer")
2004	Redline comparison of specification of PCT-Brewer to specification of Ex-1004, US2016/0215808 ("Brewer")
2005	Complete file history for U.S. Patent No. of 11,885,358
2006	Docket Navigator Search Results for Decisions on Motions to Stay by Judge Hall
2007	*Howmet Aerospace Inc., v. Stanley Engineered Fastening, et al.*, Case No. 1-25-cv-01335 (D. Del.), Dkt. No. 1, Plaintiff's Complaint.

I. INTRODUCTION

As explained in Howmet's Request for Discretionary Denial (Paper 9), the Director should exercise his discretion and deny institution as the validity of U.S. Patent No. 11,885,358 ("'358 patent") is more appropriately adjudicated before the District Court. Further, as shown in this preliminary response, Petitioner's challenge is non-meritorious confirming that discretionary denial *and* denial on the merits are appropriate.

II. BACKGROUND

A. The '358 Patent

The '358 patent describes and claims a *blind fastener* having a mandrel and sleeve. As illustrated in FIG. 1 (below), the blind fastener 100 includes a sleeve 102 and a mandrel 112 having a first mandrel end 114 and a second mandrel end 116. (Ex-1001 at 3:58-4:16.) The second mandrel end 116 can comprise a pull region 120 configured to be engaged by an installation tool, and the pull region 120 can comprise an axial length, l, that is no greater than 4 times a diameter, d3, of the shank region 122. (*Id.* at 4:27-39.)

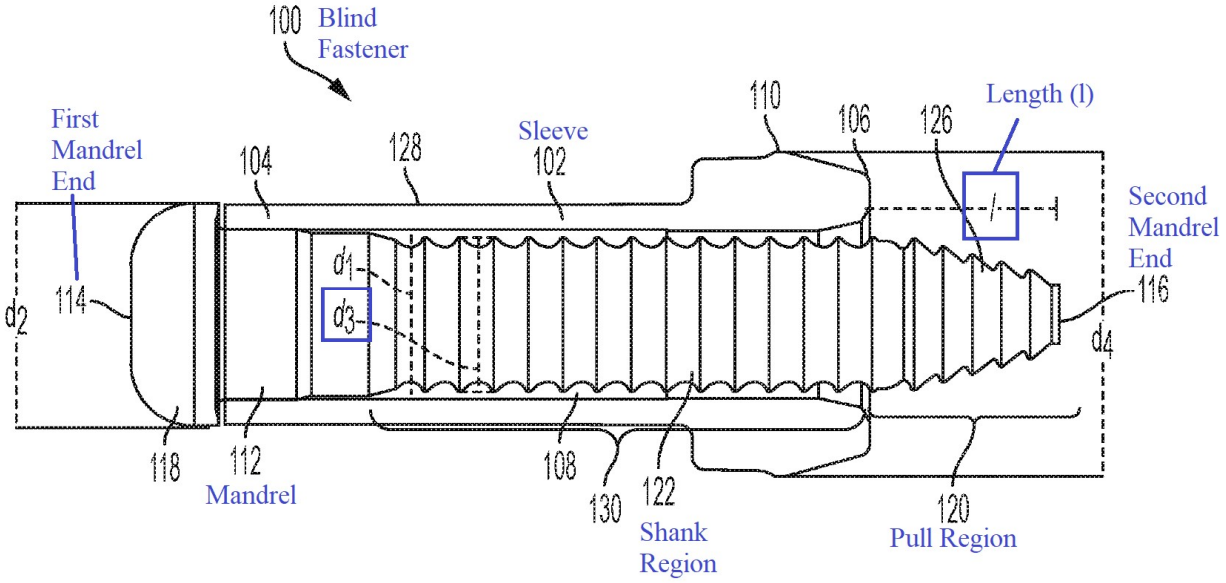

(*Id.* at FIG. 1.)[1] The design of the blind fastener enables the "use of a smaller installation tool for installation since the force required to install the blind fastener may be less than a force that can fracture the mandrel" while also allowing "the sleeve wall thickness [to] be reduced by, for example, 10% or 15%, which can save material cost." (*Id.* at 7:28-37.)

To install the fastener blindly (e.g., without being able to access one side of an assembly), and as illustrated in FIG. 2A (below), the fastener 100 may be "installed into a bore 234 in a structure 232" such as a structure having "a first layer 242 and a second layer 244," wherein "[u]pon installation into the bore 234, the blind

[1] Emphasis and annotations added herein unless otherwise noted.

fastener 100 can secure the first layer 242 and the second layer 244 together." (*Id.* at 5:51-52, 6:3-6.)

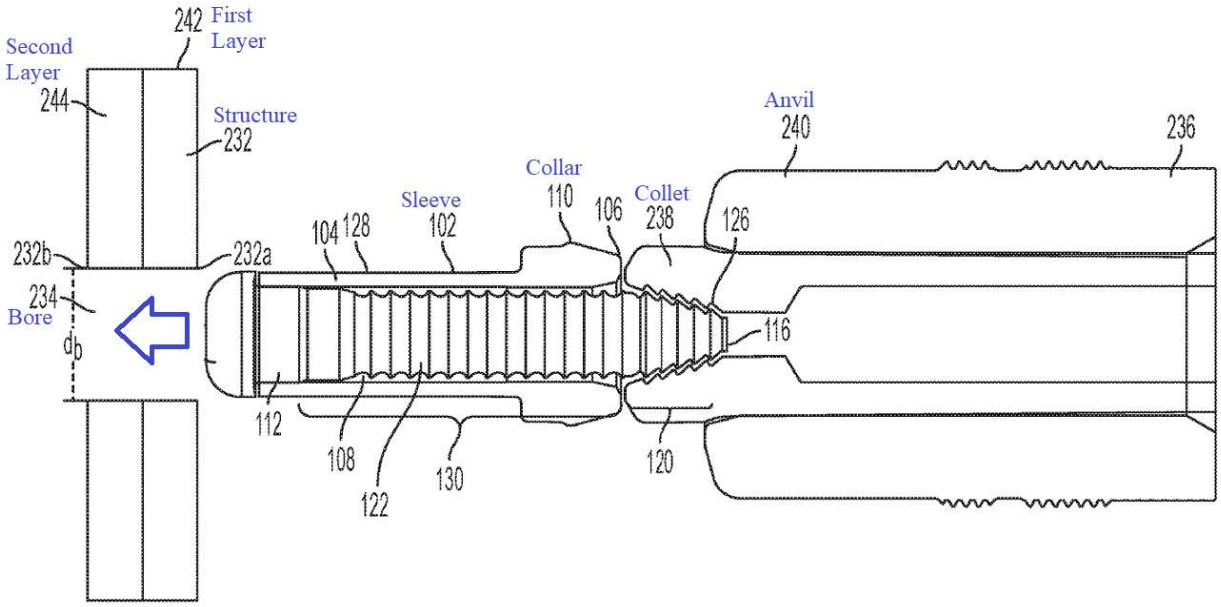

FIG. 2A

As shown in FIG. 2B (below), once the first mandrel end 114 has passed into and through the bore 234, the collar 110 of the sleeve 102 can be in forcible contact with the structure 232 at an entrance side 232a of the structure 232. (*Id.* at 6:22-28.) Next, "a collet 238 of the installation tool 236 can engage the pull region 120 of the blind fastener 100" after which "the collet 238 can apply a force to the pull region 120 of the mandrel 112." (*Id.* at 6:29-36.) "Upon the collet 238 reaching a predetermined retraction distance into the installation tool, the anvil 240 can forcibly contact the second sleeve end 106." (*Id.* at 6:41-43.)

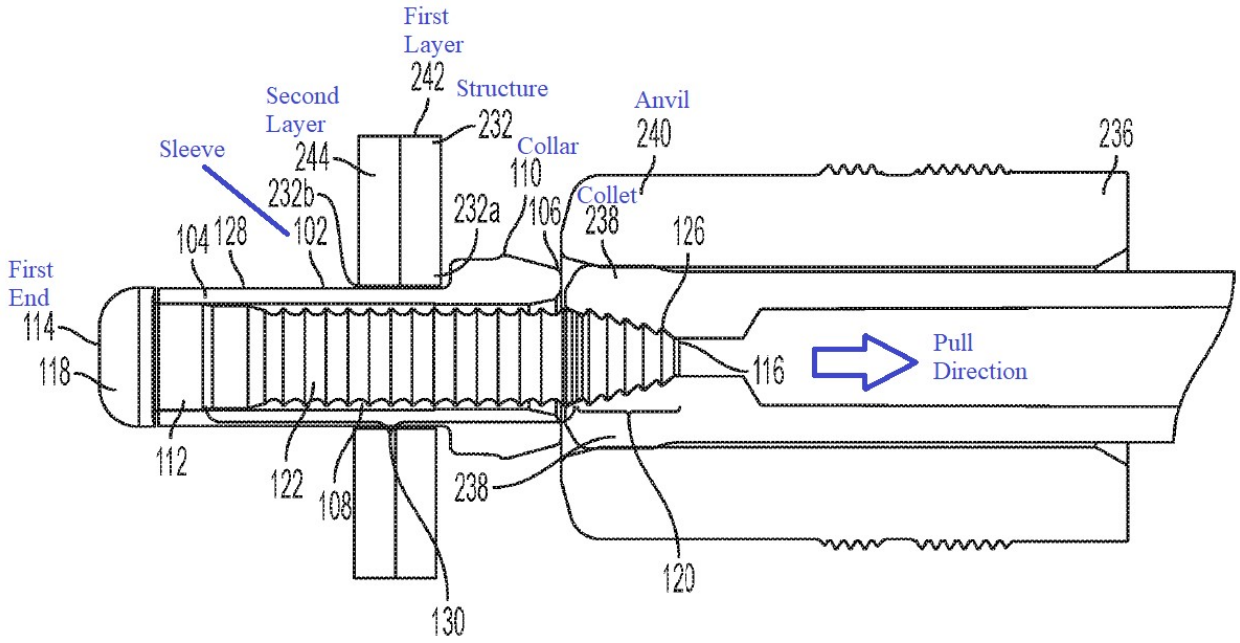

FIG. 2B

(*Id.* at FIG. 2B.)

As "illustrated in FIG. 2C [below], the first sleeve end 104 and the elongate portion 128 can be deformed on an exit side 232b of the structure 232 responsive to forcible contact from mandrel 112" and "the second sleeve end 106 can be swaged onto the shank region 122 on an oppositely disposed entrance side 232a of the structure 232 responsive to forcible contact from the anvil 240," such that "the first layer 242 and second layer 244 of the structure 232 are secured together." (*Id.* at 6:62-7:9.)

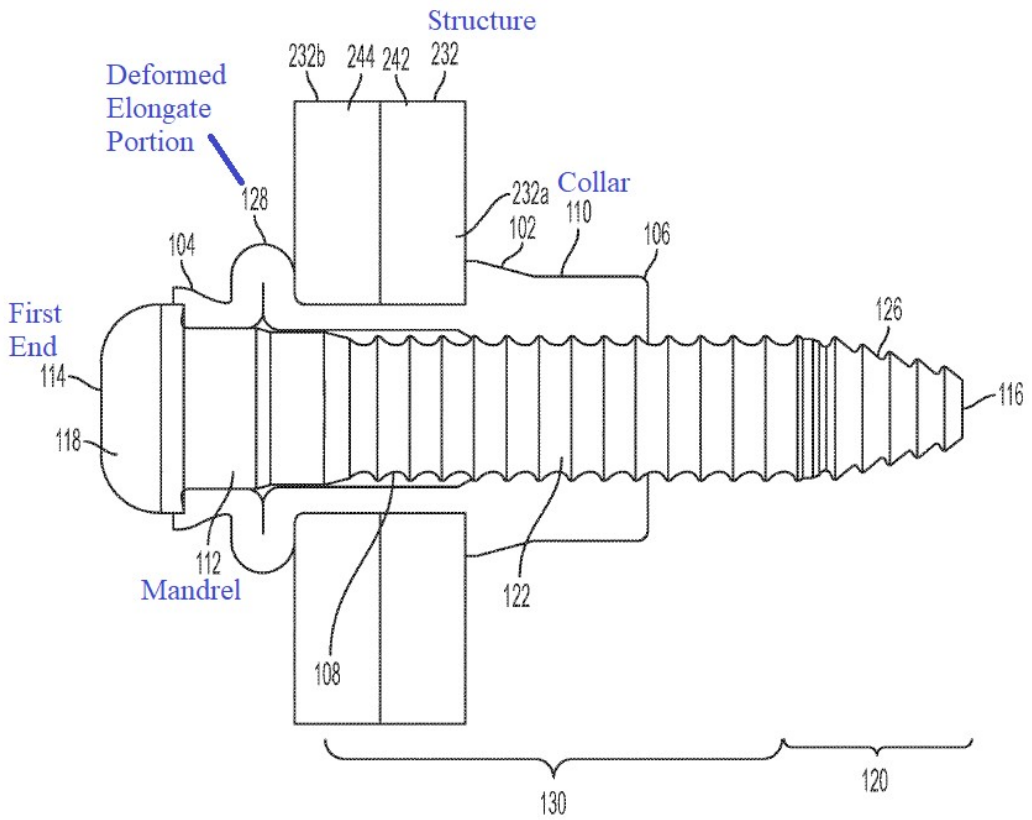

FIG. 2C

(*Id.* at FIG. 2C.) Thus, the blind fastener of the '358 patent facilities securing an assembly and without the need to access both sides of the assembly. This technology is disparate from the non-blind fasteners described by Petitioner's Brewer reference (Ex. 1004), which function by inserting a pin from a *first side* of an assembly followed by securing the pin using a collar on the *other side* of the assembly.[2]

B. Parallel District Court Litigation

[2] Brewer is described in further detail below.

On October 31, 2025, Howmet filed a complaint alleging direct and indirect infringement of the '358 patent by Stanley Engineered Fastening LLC, Avdel UK LTD, and Avdel Holding Limited and requested a permanent injunction against the defendants. *Howmet Aerospace Inc., v. Stanley Engineered Fastening, et al.*, Case No. 1-25-cv-01335 (D. Del.) (hereinafter "*Delaware* Case"), Dkt. No. 1, Complaint. (Ex-2007 at 1.) The *Delaware* Case is pending before Judge Jennifer Hall in the District Court for District of Delaware.

C. POSITA Level

Patent Owner takes no position on Petitioner's proposed POSITA definition as Petitioner's obviousness arguments are defective under any reasonable POSITA definition.

III. GROUND A: A POSITA WOULD NOT HAVE BEEN MOTIVATED TO MODIFY CORBETT IN VIEW OF BREWER AS DOING SO WOULD CHANGE CORBETT'S PRINCIPLE OF OPERATION AND RENDER IT UNSATISFACTORY FOR ITS INTENDED PURPOSE

Petitioner's Ground A asserts all challenged claims of the '358 Patent are obvious over U.S. Patent Application Publication No. 2018/0111184 to Corbett et al. (Ex. 1003; "Corbett") in view of U.S. Patent Application Publication No. 2016/0215808 to Brewer et al. (Ex. 1004; "Brewer"). (Petition at 16-23.) As shown below, Petitioner's challenge is fatally defective and should be rejected.

A. Petitioner's *Graham* Analysis Is Defective

To institute an *inter partes* review, the petitioner must show a reasonable likelihood that at least one challenged claim is unpatentable. 35 U.S.C. §314. Thus, when a petitioner presents a challenge based on obviousness, as here, a proper analysis under *Graham v. John Deere* is required. Specifically, a Petitioner must determine "the scope and content of the prior art" and ascertain the "differences between the prior art and the claims at issue." *Graham v. John Deere Co.*, 383 U.S. 1, 17-18 (1966); *see also KSR Int'l Co. v. Teleflex*, 1727, 1739 (reaffirming *Graham* analysis).

Petitioner conducts ***no*** such analysis. Petitioner simply assumes the claims are obvious and begins discussing why it would be obvious to modify Corbett in view of Brewer without ever analyzing what Corbett discloses. Petitioner's introduction to its Ground A is telling:

> "**Ground A: Claims 1-20 Were Obvious Over Corbett In View Of Brewer**
>
> Brewer taught that a "problem" with conventional swage fasteners with multiple, "relatively small pull grooves" like in Corbett (or Kleinman) "is that the crests of the teeth of the installation tool may not engage sufficiently with the shallow grooves provided on the [pull region of the] pin, e.g. the crests of the teeth may be caused to close directly onto the crests of the pull grooves, which can cause increased loads and slippage, thereby causing damage to the tool and/or fastener." Brewer,

> ¶[0003], [0015]; Brewer, ¶¶[0004]-[0011] (identifying additional disadvantages of multi-groove pull regions); Sections IV.A., IV.C., above; Ex. 1002, ¶94. POSITAs would understand from Brewer that such shortcomings of swage fasteners like Corbett's (or Kleinman's) with multi-groove pull regions can be overcome by replacing the multi-groove pull region with Brewer's single groove pull region 20/80 (combination of Brewer's annular "single pull groove 20" and "end portion 80"). Brewer, ¶¶[0015]-[0017], [0072]-[0076]; Brewer, FIGS. 8, 12; Section IV.C., above; Ex. 1002, ¶94."

(Petition at 16.) As shown, Petitioner simply dives into a motivation to combine argument without ever analyzing the scope and content of the prior art (the first *Graham* factor) and the differences between the claims and prior art (the second *Graham* factor). An inadequate *Graham* analysis (as here) counsels towards denying the petition. *In re Magnum Oil Tools Int'l, Ltd.*, 829 F.3d 1364, 1380 (Fed. Cir. 2016) ("Petitioner cannot satisfy its burden of proving obviousness by employing "mere conclusory statements," but "must instead articulate specific reasoning, based on evidence of record, to support the legal conclusion of obviousness.") This is especially the case where, as here, the Petition proposes modifying the prior art in a manner which changes the principle of operation of the primary reference and makes the primary reference unsuitable for its intended purpose, as shown below.

B. Petitioner contends Corbett's pull portion has shortcomings that necessitate a change to Brewer's pull portion arrangement

As explained above, Petitioner asserts all challenged claims are obvious in view of Corbett and Brewer. (Petition at 16-23.) Petitioner characterizes Corbett as the primary reference. (Petition at 4.)

As pertinent here, FIG. of 1 Corbett (below) illustrates a blind fastener 10 having an outer sleeve 14 and a bolt 12, the bolt 12 having a grooved portion 24 and a pull portion 28, with the pull portion 28 having pull grooves 28a.

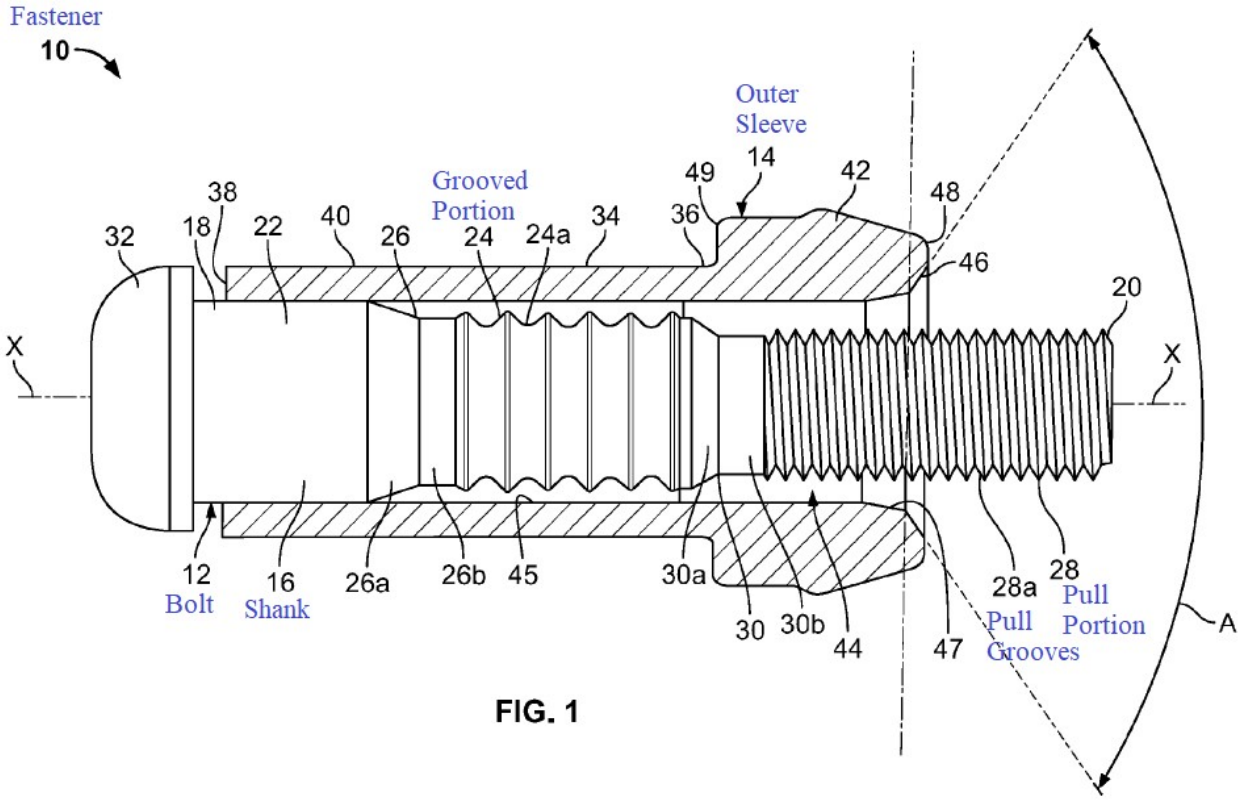

(Corbett at FIG. 1 and [0009].) To install the fastener 10, and as illustrated in FIG. 2 (below), an installation tool 60 is used, which tool 60 includes a puller 62 and an anvil 64. (*Id.* at [0012].) The puller 62 includes "chuck jaws 66 having internal

teeth 68 and pull grooves 70 that are sized, shaped and adapted to grip the pull grooves 28a of the pull portion 28 of the bolt 12." (*Id.*)

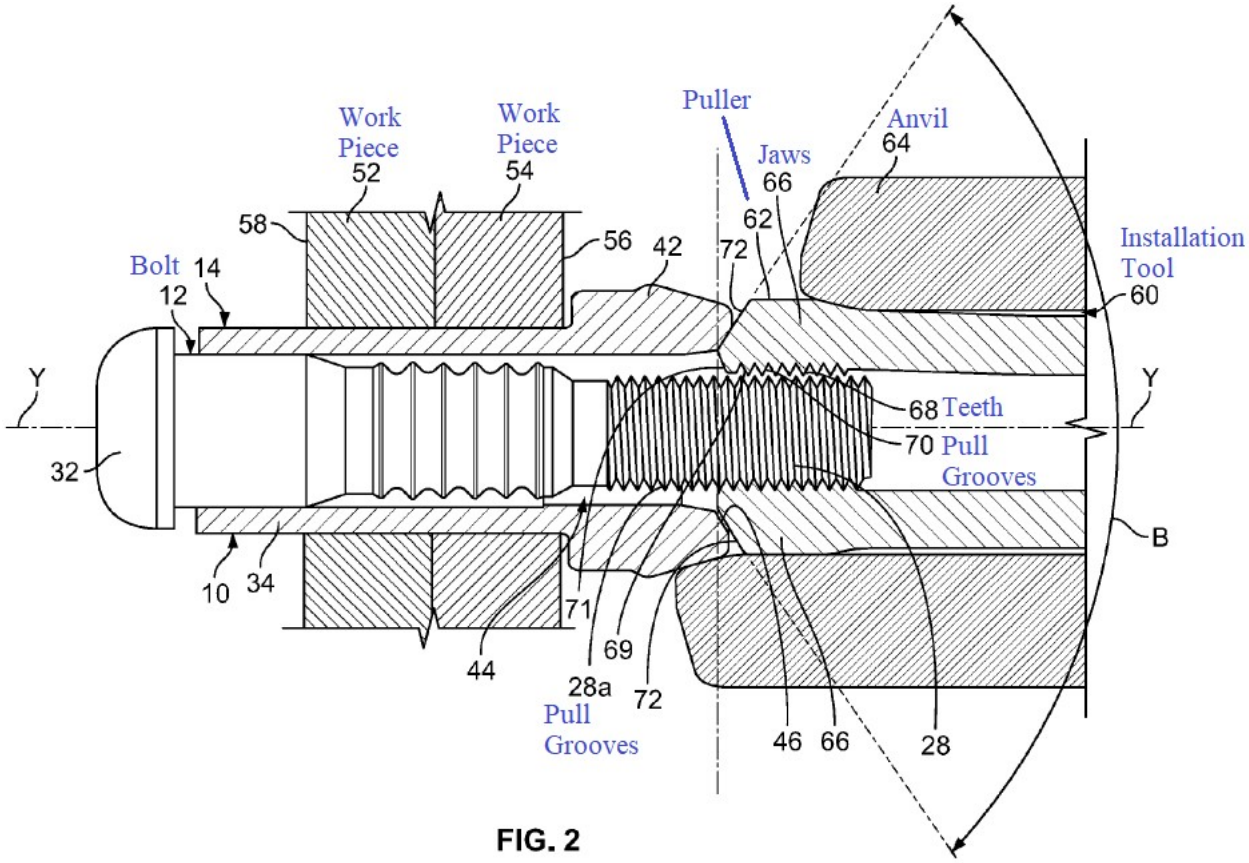

FIG. 2

(*Id.* at FIG. 2.) "Once the puller 62 is aligned with the pull portion 28, namely, the teeth 68, grooves 70 and pull grooves 28a are aligned properly, the jaws 66 of the puller 62 are then moved inwardly to a closed position and clamp down on the pull portion 28 and provide an axial force on the bolt 12 and close any gap between the work pieces 52, 54. The anvil 64 then engages and swages the sleeve 14." (*Id.* at [0013].) According to Corbett "the sleeve 14 can form various expanded <u>*blind side shapes*</u> as the bolt 12 is pulled into or against the outer sleeve's 14 blind side"

including when "a portion of the elongated body 34 of the outer sleeve 14 is compressed and swaged into the grooved portion 24 of the bolt 12." (*Id.* at [0014].)

Petitioner applies Brewer as a secondary reference and contends it would be obvious to modify Corbett's pull portion 28 in view of Brewer. (Petition at 16-23.) Specifically, Petitioner argues "it was obvious to modify Corbett's fastener 10 in view of Brewer by replacing the relatively small pull grooves 28a of Corbett's pull region 28 with Brewer's single-groove pull region 20/80" and by replacing Corbett's "teeth 68, 69 and multiple/shallow pull grooves 70 of the collet jaws 66 with the single lip 110 of Brewer's collet 102 to appropriately mate with the modified fastener's single groove 20." (*Id.* at 17.) Petitioner contends modifying Corbett in view of Brewer presents purported advantages such as easier tool engagement, reduced sensitivity to alignment, lower clogging, simpler manufacture, and reduced pitch-error sensitivity. (*Id.* at 18-21.) Petitioner is wrong. Brewer's teachings are inapplicable to and disparate from Corbett at least because (a) the alleged "problem" with multiple grooves is not present in Corbett, and (b) Brewer's non-blind pin-collar arrangement is completely different than and inapplicable to Corbett.

C. A POSITA would not have applied Brewer's non-blind fastener teachings to Corbett's blind fastener as doing so would require a complete redesign of Corbett's fastener and would render Corbett unsatisfactory for its intended purpose.

As explained previously, FIG. 1 of Corbett (below) illustrates a blind fastener 10 having an outer sleeve 14 that covers the entire grooved portion 24 of Corbett's bolt 12 and much of the pull portion 28.

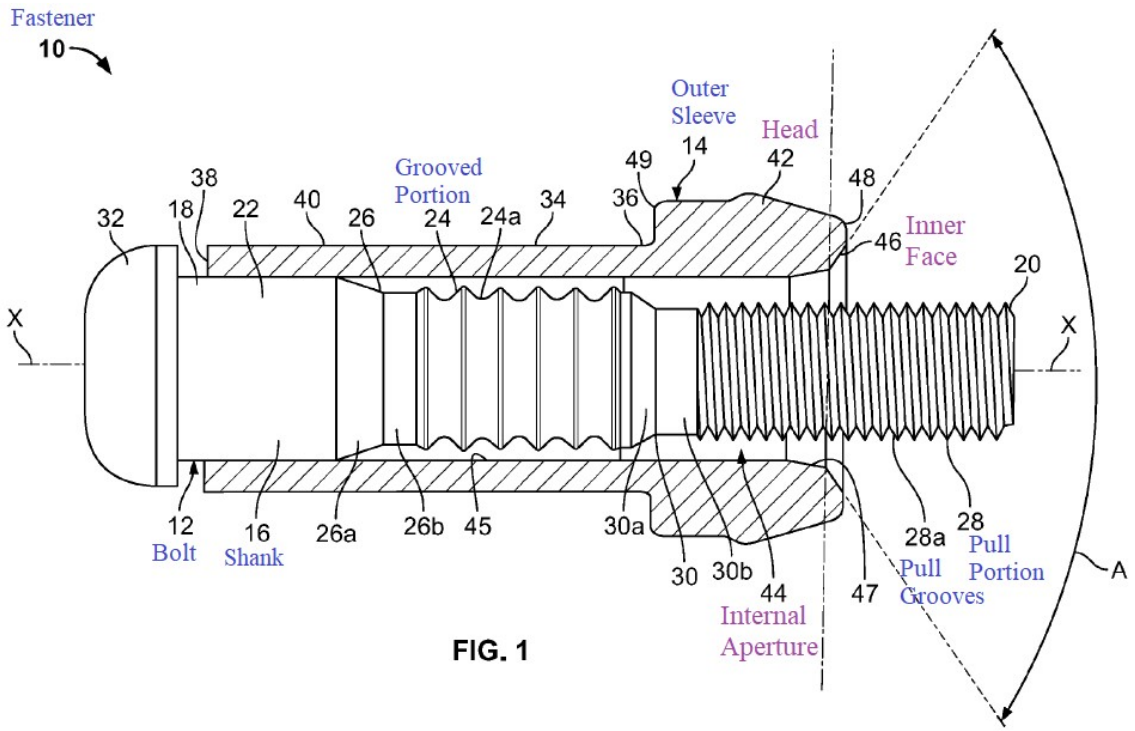

FIG. 1

(Corbett at FIG. 1.) Corbett's outer sleeve 14, particularly its head 42 and internal aperture 44, and the anvil 64 are purpose-built so that the puller 62 grips a substantial protruding length of the multi-groove pull portion 28a while the anvil 64 swages the head 42. (*Id.* at [0009]–[0014], FIG. 2.)

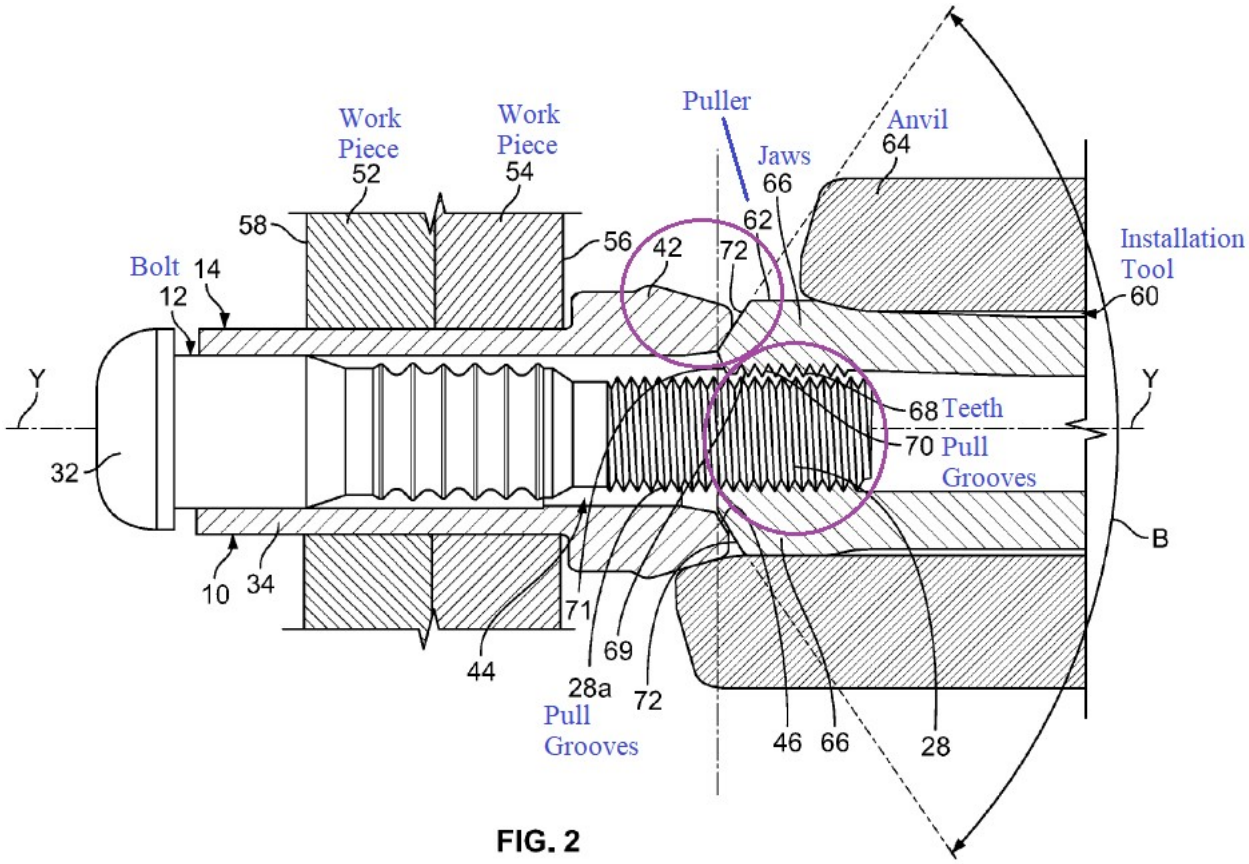

FIG. 2

(*Id.* at FIG. 2.) Indeed, Corbett's outer sleeve 14 <u>*must be present*</u> prior to installation to facilitate **<u>blind</u>** fastening via engagement with its installation tool. (*Id.* at [0011] (explaining in relation to FIG. 2 that "the bolt 12 is inserted within the aperture 44 of the sleeve 14 such that the head 32 of the bolt 12 is adapted to sit on and be juxtaposed with the second end 38 of the sleeve 14, and at least a portion of the pull portion 28 of the bolt 12 extends outwardly from the head 42 of the sleeve 14" after which "the fastener 10 is inserted through holes of the work pieces 52, 54, with the head 42 of the sleeve 14 abutting one side 56 of the work piece 54, and at least a

portion of the elongated body 34 of the sleeve 14 extending outwardly from one side 58 (i.e., the blind side) of the work piece 52.”).)

Brewer’s non-blind fastener arrangement is the opposite of Corbett. As shown below, instead of inserting a bolt-sleeve arrangement from only a single side as per Corbett, Brewer’s pin 4 is first inserted through a first side of two workpieces (130, 140) after which Brewer’s short collar 10 is added to Brewer’s pin tail and from the *other side* of the workpieces (130, 140), i.e., a **non-blind** installation.

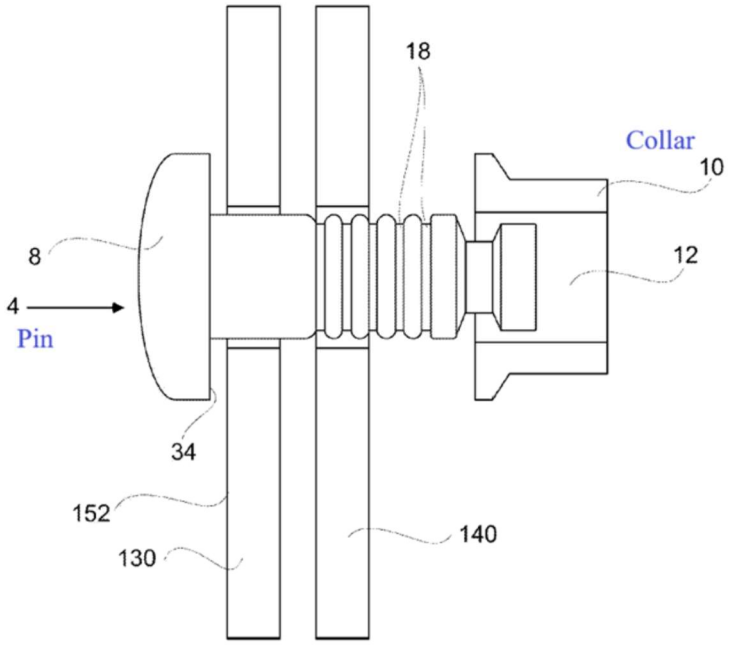

Figure 7

(Brewer at FIG. 7; [0083]-[0084].) These differences are *not* trivial and, consistent with the failure to conduct a proper *Graham* factor analysis, are *not* discussed in the Petition.

Implementing Brewer's short single-groove tail and non-protruding collet in Corbett's **blind** sleeve/head geometry would require redesigns that change Corbett's principle of operation and render the fastener/tool unsatisfactory for its intended blind-installation purpose. Petitioner's contention fails for at least two independent reasons grounded in the record: (i) Brewer's short pin tail length L would place the entirety of the pin tail having the single groove inside Corbett's sleeve head cavity, preventing puller access; and (ii) Corbett already provides a tailored multi-groove/puller system that addresses fastener and puller teeth engagement and alignment, so Brewer's "problem" is not present in Corbett.

The Petition refers the Board to FIGS. 5a-5b as support for its combination. (Petition at 27.) The disclosures surrounding FIGS. 5a-5b prove Petitioner's combination is fatally flawed. Specifically, Brewer requires its pull region 20 to be short relative to the shank diameter. Brewer defines a length "L" as "the total length of the pin tail 6 over which the pull groove 20 and end portion 80 extend." (Brewer at [0075].) Brewer further requires that "L = 0.936 D (and more generally … 0.7 D to 1.2 D)" with "D" defined as "the maximum diameter of the locking portion 36." (*Id.* at [0072], [0076].) Annotated versions of Brewer's FIGS. 5a-5b illustrating this requirement are below.

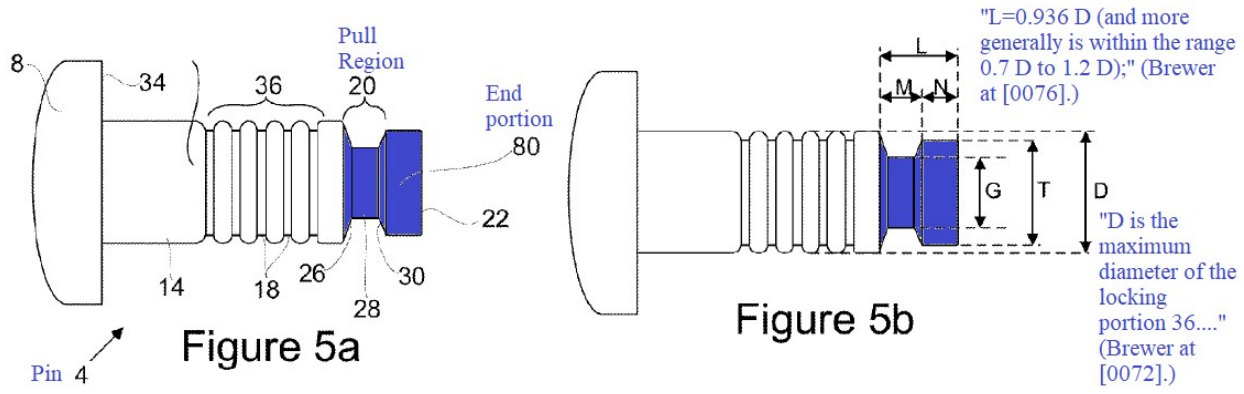

(*Id.* at FIGS. 5a-5B.) Further, Brewer's collet engagement relies on an internal lip 110 contacting the single groove 20 on an exposed tail as the collet 102 is drawn into its anvil 112, and the collet "does not protrude beyond the front of the nosepiece:"

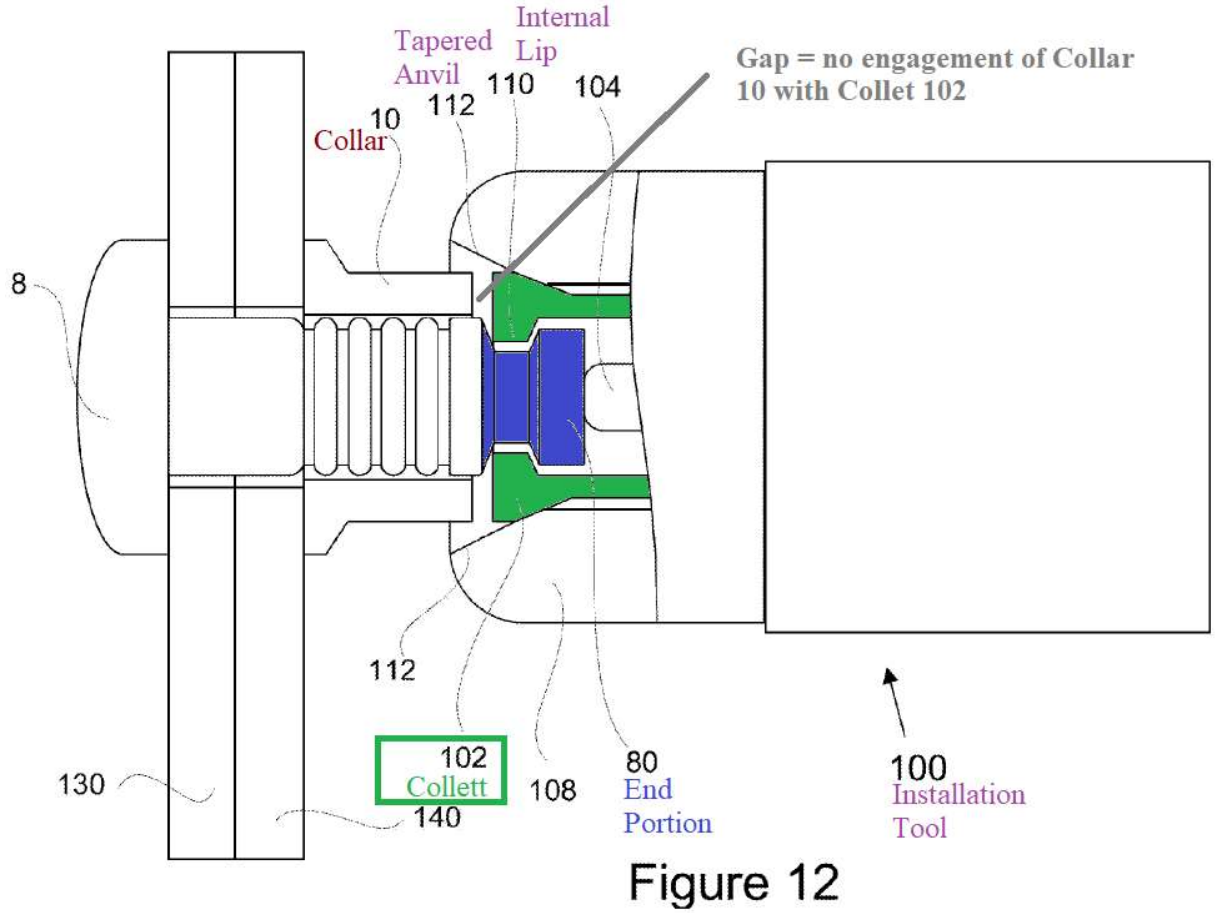

(*Id.* at [0042], [0088], FIG. 12.) Thus, Brewer's collet 102 *never* engages the collar 10 of the lockbolt 2. (*Id.*)

Conversely, as shown above, Corbett's sleeve 14, including its head 42 and internal aperture 44, are purpose-built so that the installation tool's puller 62 grips a substantial protruding length of the multi-groove pull portion 28a while the installation tool's anvil 64 swages the head 42. (Corbett at [0009]–[0014], FIG. 2.) Transplanting Brewer's short pull region 20/80, which must satisfy Brewer's requirement of "L = 0.936 D (and more generally … 0.7 D to 1.2 D)," into Corbett would result in Corbett's pin tail end (second end 20) being *completely inside* the head/internal aperture 42/44 of Corbett's sleeve 14, leaving insufficient protrusion for proper engagement and operation by either Brewer's non-protruding collet 102 or Corbett's multi-tooth puller 62. That is, Corbett's aperture 44 is not sized and shaped to accommodate and provide sufficient clearance for either Brewer's collet 102 or Corbett's puller 62, much less to enable them to engage the pin tail portion/pull groove and operate the respective jaws.

The below modified Figure 1 of Corbett shows Petitioner's proposal modified with the end portion 80 of Figure 5a of Brewer and the collet 102 of Figure 12 of Brewer (for illustration purposes only and not evidence of actual disclosure).

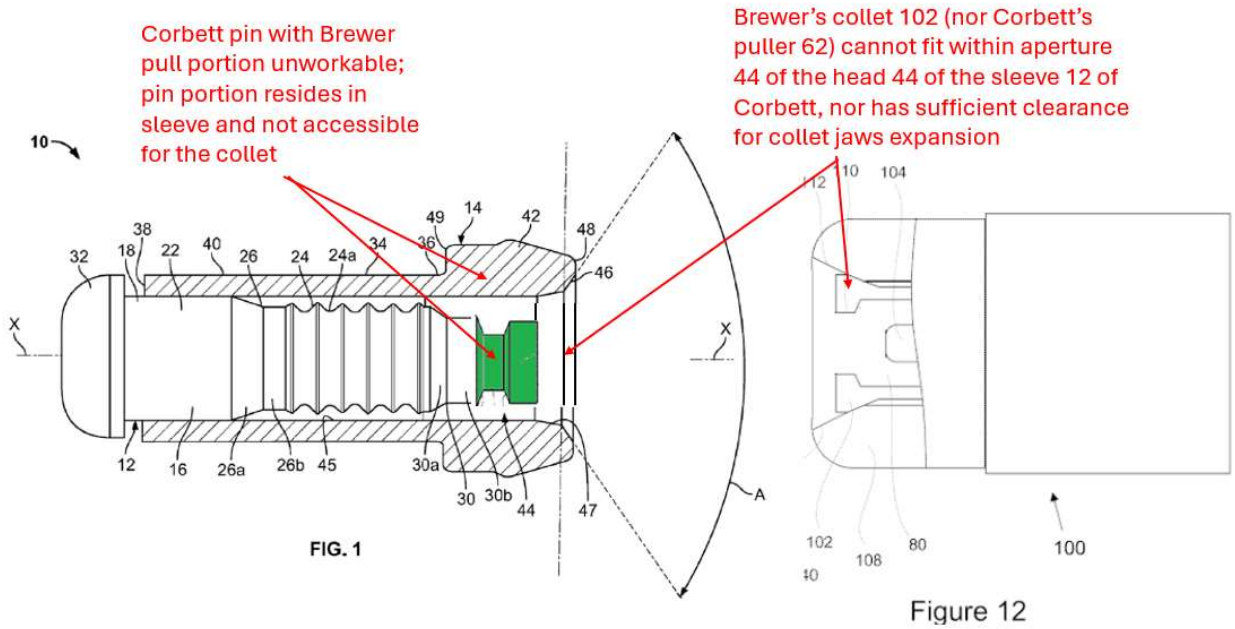

As shown, if Brewer's tail and collet are superimposed on Corbett's FIG. 1 geometry, the single groove would lie completely within the head/cavity 42/44, beyond reach of the collet. To make Brewer's single groove accessible in Corbett, a POSITA would have to either (a) lengthen Brewer's pin tail well beyond its taught L range, and in doing so abandoning Brewer's core short-tail principle, and/or (b) alter Corbett's sleeve head thickness/internal aperture diameter and depth and/or tool nosepiece/collet geometry to reach past the head 42, contrary to Brewer's engagement setup and Corbett's principle of operation. (Brewer at [0025], [0076], [0088], FIGS. 5A, 12; Corbett at [0012]–[0014], FIG. 2.) Consistent with Petitioner's failure to conduct a proper *Graham* factor analysis, the Petition identifies no dimensional mapping of Brewer's L to Corbett's head thickness or

internal aperture depth, nor any reasoned tooling changes that preserve Brewer's asserted benefits. Accordingly, Petitioner's proposal is not a predictable, plug-and-play substitution but, at best, a multi-parameter redesign, i.e., an undertaking a POSITA would not pursue.

Repurposing Corbett's outer sleeve 14 is not an option. Unlike Brewer's collar 10, Corbett's outer sleeve 14 *must* extend through and beyond the workpieces that are to be joined:

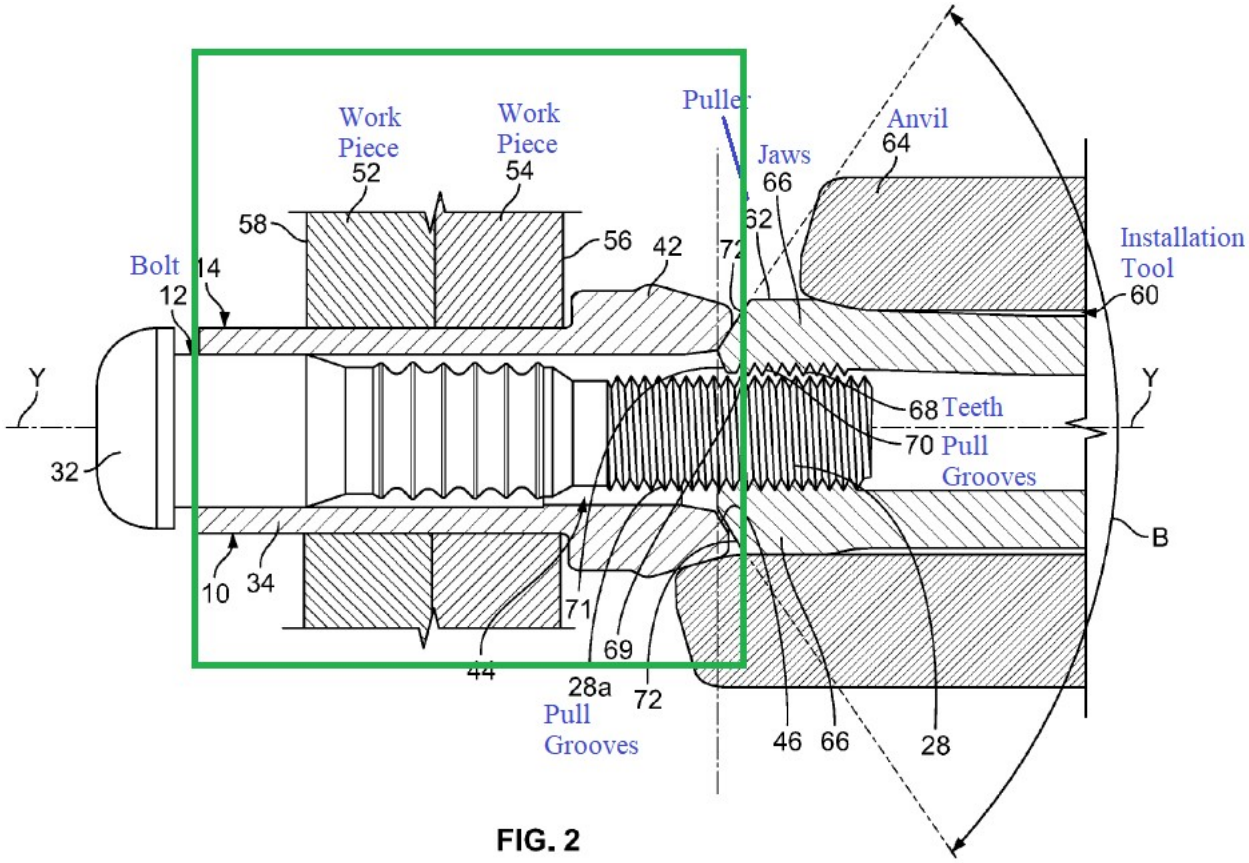

FIG. 2

(Corbett at FIG. 2.) Shortening Corbett's outer sleeve 14 to allow for a single pull grove (e.g., per Corbett) would eliminate or substantially reduce the size of the head

42 of the sleeve 14. Yet, the head 42 facilitates the axial force that results in swaging of the outer sleeve, so its elimination is not possible. Shortening the head 42 is also not an option, as doing so would remove or substantially degrade the ability to successfully swage the outer sleeve 14. (*Id.* at [0013]-[0014] ("Once the puller 62 is aligned with the pull portion 28 … the jaws 66 of the puller 62 are then moved inwardly to a closed position and clamp down on the pull portion 28 and *provide an axial force on the bolt 12* and close any gap between the work pieces 52, 54. The anvil 64 then engages and swages *the sleeve 14*. Referring to FIG. 2, *the puller 62 continues to provide an axial force on the bolt 12. In embodiments, the sleeve 14 can form various expanded blind side shapes as the bolt 12 is pulled into or against the outer sleeve's 14 blind side*. In an embodiment, a portion of the elongated body 34 of the outer sleeve 14 is compressed and swaged into the grooved portion 24 of the bolt 12.").) Thus, a POSITA would not consider repurposing Corbett's outer sleeve 14 to be a viable option in an effort to allegedly achieve a "simpler" single pull groove.

Independently, a POSITA would not have been motivated to apply Brewer's teachings to Corbett because Corbett already solves any potential tool-to-pull portion engagement mismatch. Corbett expressly teaches that any initial mismatch between the teeth 68 and the grooves 70 of the puller 62 and the fastener's pull grooves 28a

is corrected via a guided interface between the puller face 72 of the puller 62 and the inner face 46 of the sleeve head 42:

> "[T]he face 72 of the jaws 66 of the puller 62 stops against the inner face 46 of the head 42 of the sleeve 14 to align the puller 62 properly with the pull portion 28 … [and] permits the puller 62 to shift forward … or backward … depending on how the teeth 68 … engage initially the pull grooves 28a … while closing, and align the teeth 68 … with the pull grooves 28a … Once … aligned properly, the jaws 66 … clamp down … [and] [t]he anvil 64 then engages and swages the sleeve 14."

(*Id.* at [0013]; *see also* FIG. 2.) These teachings of Corbett directly address the misengagement, pitch-error sensitivity, and angular-entry concerns Brewer criticizes in other multi-groove lockbolt systems. (Brewer at [0003]–[0005], [0009].) Consistent with its failure to conduct a proper *Graham* factor analysis, Petitioner identifies no deficiency in Corbett's engagement mechanism. Indeed, to the contrary, Corbett discloses a matched multi-groove pull portion 28a and a puller 62 with teeth 68/grooves 70 designed to engage over a substantial axial length. (Corbett at [0009], [0012]–[0014], FIG. 2.)

Brewer's tool architecture also fundamentally differs from Corbett's in how alignment is achieved. As explained previously, Brewer's collet 102 with internal lip 110 <u>*only*</u> engages the pull groove 20 on the exposed tail and expressly "does not protrude beyond the front of the nosepiece" and does not engage the collar 10;

instead Brewer's tapered anvil 112 contacts and drives the collar 10 during swaging. (Brewer at [0042].) This is shown, for example, by FIG. 12 of Brewer:

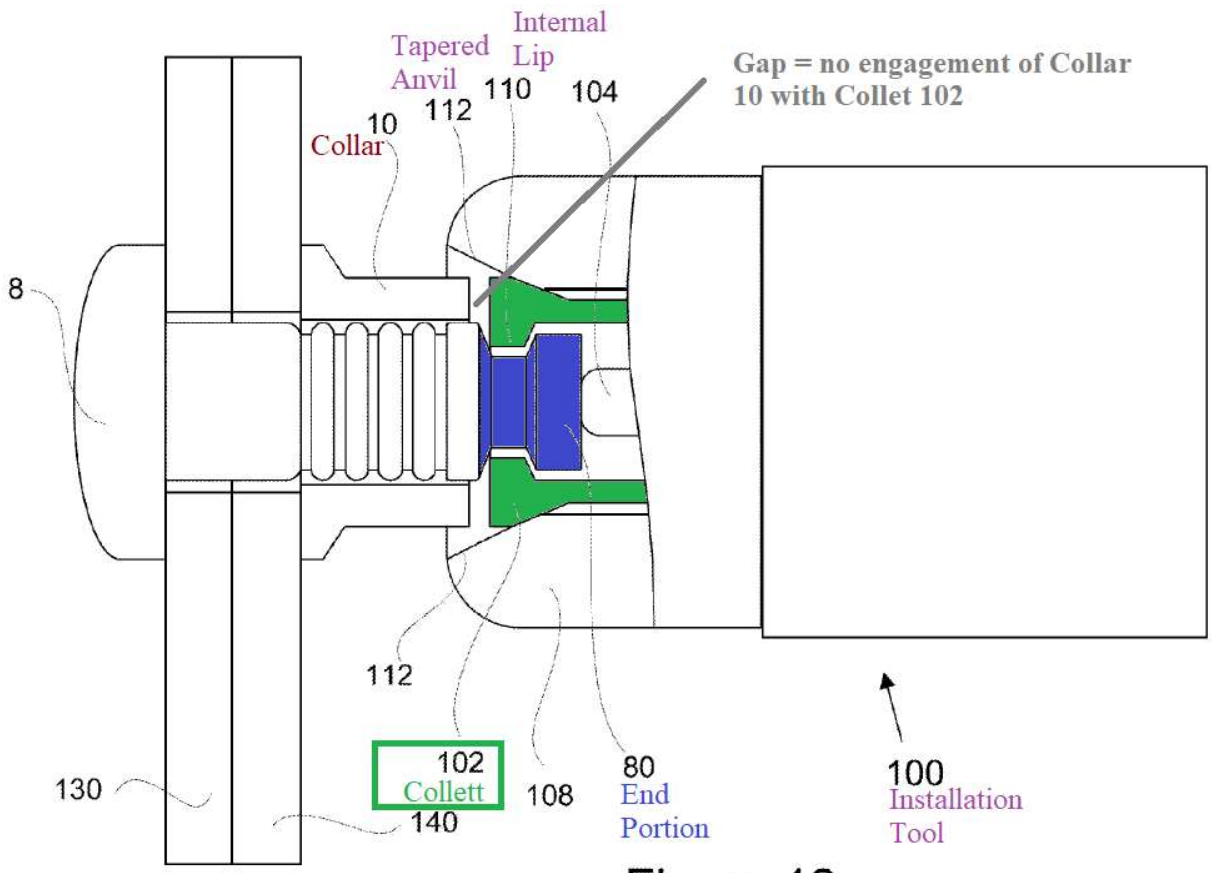

Figure 12

(*Id.* at FIG. 12; *see also id.* at [0088] and FIGS. 5A, 10, 11a, 13-15.) Brewer does not disclose, teach, or suggest any seating or alignment interaction between the collet 102 and the collar 10, i.e., the end face of the collar 10 never engages the end face of the collet 102.

By contrast, Corbett's puller face 72 intentionally "stops against the inner face 46 of the head 42 of the sleeve 14 to align the puller 62 properly with the pull portion 28," permitting the jaws to shift forward/backward during closure to self-align the

teeth 68/grooves 70 with the pull grooves 28a before clamping. (Corbett at [0013], FIG. 2.) Adapting Brewer's non-protruding collet 102 (designed not to contact the collar 10) to perform Corbett's face-stop alignment against the sleeve head 42 would require non-trivial reengineering of the nosepiece/collet geometry and would run counter to Brewer's safety/debris/stress teachings. This further confirms that Petitioner's proposed substitution is not one a POSITA would make. Brewer's separation of functions—the collet only engaging the groove while the anvil drives the collar—does not include Corbett's face-stop alignment mechanism, and adapting Petitioner's proposal to achieve such functionality would contradict Brewer's explicit tool design constraints. (Brewer at [0042]–[0044].)

Additional adjustments to Brewer and/or Corbett are not explained in the Petition and nonetheless would be fruitless. For instance, it is not possible to "adjust standout" to make Brewer's groove accessible—either by lengthening Brewer's tail L or thinning Corbett's head/cavity. Any lengthening of Brewer's tail (L) departs from Brewer's express L:D ratio requirements, i.e., "L=0.936 D (and more generally is within the range 0.7 D to 1.2 D)." (Brewer at [0076].) Doing so also abandons the core short-tail principle underlying Brewer's claimed advantages, including easier engagement, reduced alignment sensitivity, less clogging, simpler manufacture, lower tolerance/pitch-error sensitivity. (Brewer at [0015]–[0017].)

Likewise, redesigning the tool to protrude further or narrowing the nosepiece to reach into Corbett's internal aperture 44 of the sleeve 14 contradicts Brewer's safety/debris/stress teachings that "the collet … does not protrude beyond the front of the nosepiece" and increases the very risks Brewer seeks to avoid. (Brewer at [0042]–[0044].) Thinning Corbett's head 42 or altering its internal cavity 44 depth/diameter, or relocating the anvil interface, would disturb the blind-head formation and swaging sequence of Corbett described previously. (Corbett at [0012]-[0014].) Consistent with its failure to conduct a proper *Graham* factor analysis, Petitioner offers no reasoned mapping or engineering basis for such changes. Instead, Petitioner's obviousness proposal requires balancing structural performance, swaging action, and safety beyond "routine" substitution, and thus do not satisfy *KSR*'s "predictable use of prior art elements according to their established functions."

In sum, Corbett provides a **blind** fastener and tool set that resolves initial mismatch and alignment between puller teeth/grooves and the fastener's multi-groove pull portion using the inner face 46 stop and guided sliding during closure. (Corbett at [0013], FIG. 2.) Brewer's single-groove short tail and tool architecture address different problems in **non-blind** lockbolts and are not applicable to Corbett's blind sleeve/head geometry. Without a demonstrated deficiency in Corbett's engagement system, and given the incompatibilities and redesign required

to allegedly "improve" Corbett based on Brewer, a POSITA would *not* have been motivated to replace Corbett's pull portion 28 with Brewer's pull region 20/80. The asserted combination lacks a supported motivation, is not a predictable "simple substitution," and is not a substitution a POSITA would have been motivated to make. Accordingly, Petitioner has not carried its burden to show that claims 1-20 are obvious based on the prior art of Corbett and Brewer.

IV. GROUND B: PETITIONER'S GROUND B DOES NOT SAVE GROUND A

In Ground B, Petitioner asserts that claims 6-7, 11, 14 and 20 of the '358 Patent are obvious over Corbett in view of Brewer, and in further view of U.S. Patent No. 4,702,655 to Kendall ("Kendall") and U.S. Patent No, 5,315,755 to Fulbright ("Fulbright"). (Petition at 46-48.) More particularly, Kendall and Fulbright are cited for allegedly disclosing the hardness values recited in dependent claims 6 and 7 and the composition of the blind fastener as being metal in dependent claims 11, 14, and 20 (Petition at 46-48). Without conceding Petitioner's allegations, Kendall and Fulbright do not cure the deficiencies of the combination of Corbett and Brewer as detailed in Patent Owner's reply to Ground A, above. Accordingly, Petitioner has not carried its burden to show that claims 6-7, 11, 14, and 20 are obvious over Corbett in view of Brewer, Kendall, and Fulbright.

V. GROUND C: A POSITA WOULD NOT HAVE MODIFIED KLEINMAN IN VIEW OF BREWER AS TO DO SO WOULD CHANGE KLEINMAN'S PRINCIPLE OF OPERATION

Petitioner's Ground C asserts all challenged claims of the '358 Patent are obvious over U.S. Patent Application Publication No. 2006/0251490 to Kleinman et al. (Ex. 1006; "Kleinman") in view of Brewer. (Petition at 48-51.) As shown below, Petitioner's challenge is fatally defective and should be rejected.

A. Ground C applies art already considered by the Office

As explained in Patent Owner's request for discretionary denial, both the Kleinman and Brewer references were of record during prosecution and the challenged claims were allowed over these references. (Paper 9 at 10-12.) As shown below, there are good reasons the Office already found the claims patentable over Kleinman and Brewer.

B. Petitioner's Ground C does not apply the *Graham* factors

As explained in Section III, *supra*, Petitioner failed to apply the *Graham* factors for Ground A. Petitioner repeats this mistake for Ground C. (Petition at 48-51 (jumping into motivation to combine Kleinman and Brewer without analysis).) An inadequate *Graham* analysis (as here) counsels towards denying the petition. *In re Magnum Oil Tools*, 829 F.3d at 1380.

C. Petitioner's obviousness proposal applies Brewer's disparate non-blind lockbolt teachings to Kleinman's blind fastener

Petitioner's Ground C proposes to modify Kleinman based on the teachings of Brewer. (Petition at 15-23, 48-51.) Here, Petitioner reapplies the same motivation to combine rationale as provided in Ground A. (*Id.* at 16-23 (constantly interchanging Corbett and Kleinman in the motivation to combine arguments for Corbett; *see also id.* at 48-51 (essentially repeating the motivation to combine arguments of Ground A).)

D. Overview of Kleinman's Blind Fastener

Like Corbett, Kleinman relates to a blind fastener arrangement. (Kleinman at [0001].) Further, like Corbett, Kleinman requires the use of a pin-sleeve arrangement to engage two workpieces. Specifically, a pin 11 (FIG. 1A), a sleeve 21 (FIG. 1B) and an abutment member 32 (collar) (FIG. 1C) are "assembled together to form a fastener in the way illustrated in FIGS. 2A, 2B and 2C." (*Id.* at [0020]-[0024].)

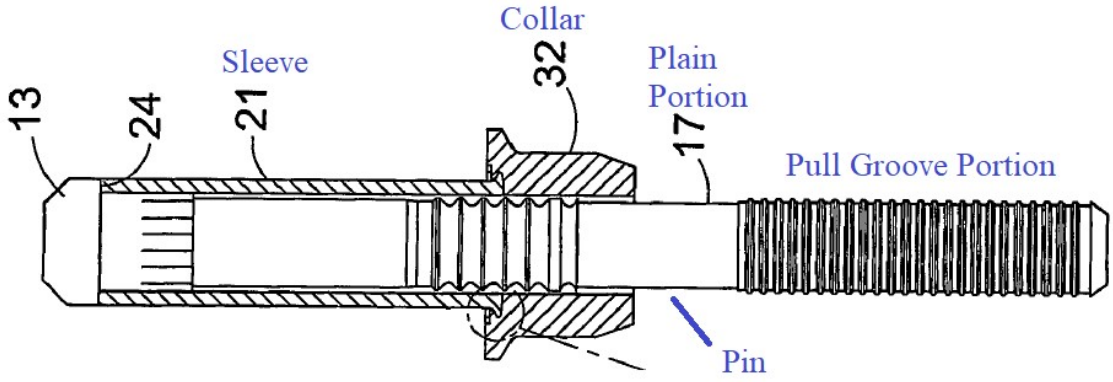

(*Id.* at FIG. 2A.) Importantly, "[t]he pin plain portion 17 *protrudes from the end face of the collar 32*." (*Id.* at [0024].)

"As illustrated in FIG. 3A, the fastener is used to secure together two structural metal panels 42, 43 which have a cylindrical aperture 44 through them in which the sleeve 21 is a clearance fit." (*Id.* at [0025].)

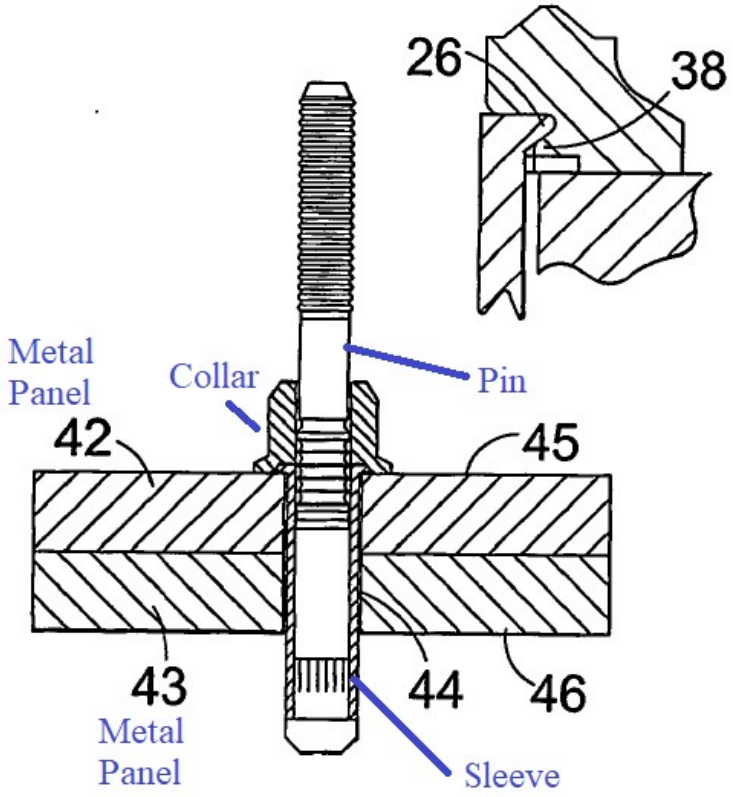

Fig.3A

(*Id.* at FIG. 3A.) "A fastener which has been inserted in a workpiece in the normal way as illustrated in FIG. 3A is now installed by applying a progressively increasing pull to the protruding part of the pin 11 in relation to the sleeve 21" using "a standard

hydraulically-powered fastener placing tool." (*Id.* at 0030.) Such a tool includes "an annular anvil 47 (FIG. 4A) having an internal throat 48 shaped appropriately to swage the collar 32" and "jaws 49 which engage with the pulling grooves in the portion 18 of the pin, and a hydraulic piston and cylinder device (not shown) for applying a progressively increasing retraction force to the jaws with respect to the anvil." (*Id.* at 0031.)

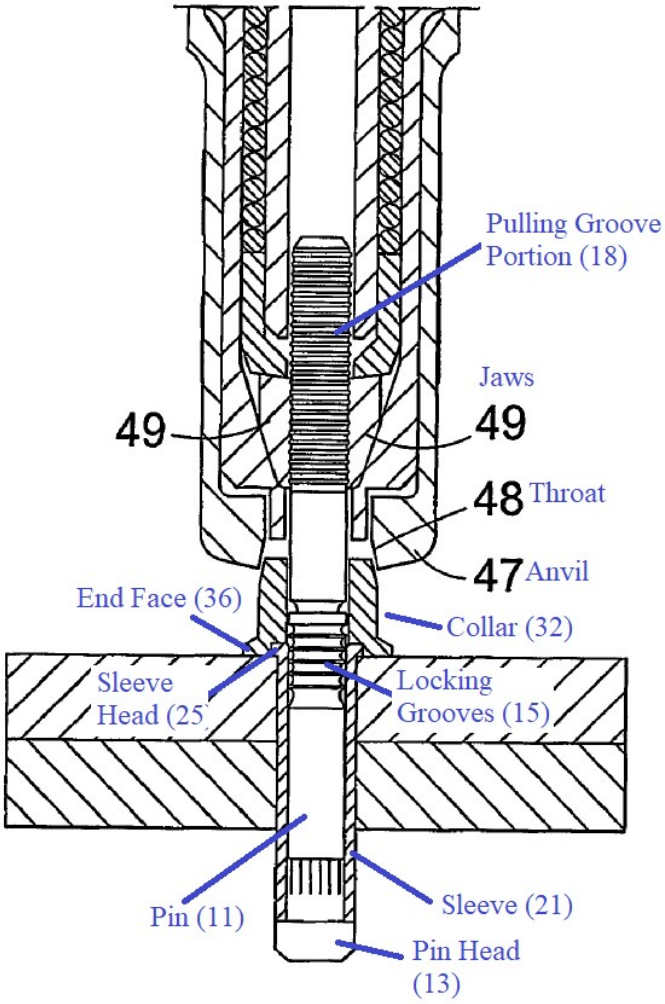

Fig. 4A

(*Id.* at FIG. 4A.) "The tool is offered up to *the protruding part of the pin*, so that the outer end of the anvil throat contacts the top of the collar 32 around its bevel 34, as illustrated in FIG. 4A. The tool is then actuated so that its jaws engage the pulling groove portion 18 of the pin and exert a progressively increasing pull on it with respect to the anvil 47. The reaction force is transmitted through the collar 32 to its end face 36 against the workpiece, and thence via the annular face 41 face of the collar to the sleeve head 25. … The sleeve is thus axially compressed between the face of the head flange 26 and its end face 24 in contact with the pin head 13. … As the force applied by the tool further increases, the anvil 47 is pushed down over the exterior of the collar, so that the anvil throat 48 swages the collar 32 radially inwardly into the locking grooves 15 on the pin. The anvil stops with its lower face near the flange at the bottom of the collar." (*Id.* at [0032]-[0033].) "Further increase of the force applied by the tool *causes the pin to break at the breakneck 16*, the broken off pin tail being pulled away by the jaws, leaving a broken surface 52, as illustrated in FIG. 6A. The tool is then removed, to leave the installed fastener, as illustrated in FIG. 6B." (*Id.* at [0034].)

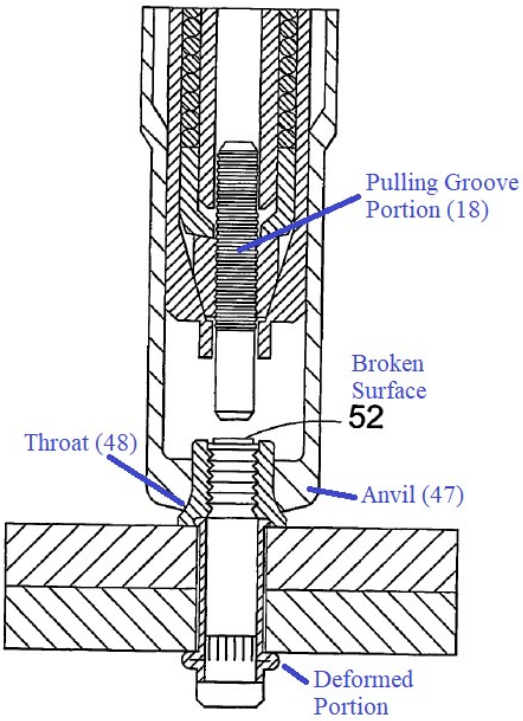

Fig. 6A

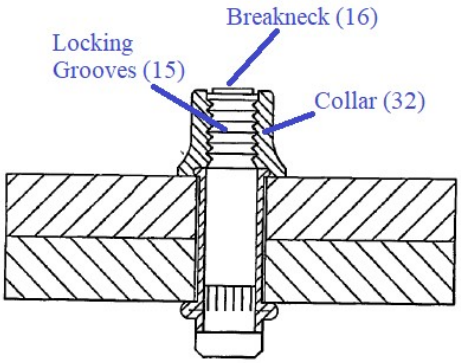

Fig. 6B

(*Id.* at FIGS. 6A-6B.)

E. A POSITA would not have applied Brewer's non-blind fastener teachings to Kleinman's blind fastener

Similar to its Ground A arguments regarding Corebtt's pull portion 28, in Ground C Petitioner contends a POSITA would have been motivated to replace Kleinman's multi-groove pulling groove section 18 of its pin 11 with Brewer's single-groove pull region 20/80 and correspondingly substitute Kleinman's multi-grooved jaws 49 and anvil 47 with Brewer's single-lip collet 102 and tapered anvil 112. (Petition at VII.C, pp. 48–76.) Petitioner's contention fails for two independent reasons grounded in the record.

First, and as with Ground A, Brewer's requirement that its short pin tail length (L) comply with "L=0.936 D (and more generally is within the range 0.7 D to 1.2 D)" is *incompatible with* Kleinman's requirement that the pulling groove section 18 protrude sufficiently through its collar 32 to withstand hammer blows and high axial seating loads during insertion and still remain accessible after an axial shift event. (Brewer at [0076]; Kleinman at [0024], [0027]–[0028], FIGS. 2A–2C, 3B–3C.) Second, Kleinman *already* discloses a tailored multi-groove/puller system (jaws 49 engaging grooves 18, anvil 47 swaging collar 32 into grooves 15) expressly designed for **blind** head formation and breakneck fracture, so Brewer's "problem" statements about **non-blind** lockbolts do not apply to Kleinman's blind fastener. (Kleinman at [0031]–[0034], FIGS. 4A–6B; Brewer at [0003]–[0009].)

A POSITA would not have been motivated to replace Kleinman's pulling groove section 18 with Brewer's short single-groove pull portion because Kleinman's design requires a sufficiently protruding tail to accommodate pre-installation contingencies that Brewer neither contemplates nor enables. A POSITA also would not have been motivated to modify Kleinman in view of Brewer because Kleinman's collar-to-sleeve staking arrangement imposes additional protrusion and robustness requirements on the tail before tool engagement. Indeed, Kleinman expressly teaches that, before the installation tool is ever engaged, the fastener may need to withstand and transmit substantial axial forces via the

protruding tail end of the pin 11 to overcome interference fits or misalignment when inserting the sleeve 21 into the workpiece aperture 44:

> "If however there is resistance to the insertion of the fastener sleeve into the aperture 44 on the workpiece (e.g. because the aperture 44 is undersize [sic] and produces an interference fit, or the two parts of the aperture 44 are mis-aligned …), then *it may be necessary to use force to insert the fastener, by axial force on the pin, as illustrated by the arrow B in FIG. 3B, e.g. by applying hammer* ***blows to the projecting tail end of the pin***. It is possible that this may be sufficient to deform the staking lugs 38 … The sleeve moves so that its head 26 contacts the near face 45 of the workpiece …"

(Kleinman at [0027]; *see* elements 11, 21, 26, 38, 44, 45; FIG. 3B.) Kleinman further teaches:

> "If a very large axial force has to be applied to the pin to make the sleeve enter the aperture, it is possible that the retaining force between the pin and sleeve, due to the interference fit between them at portion 20 of the pin, may be overcome, so that the pin moves axially through the sleeve and the interference portion 20 protrudes from the tail end of the sleeve, as illustrated in FIG. 3C. *Provided that [a] sufficient [portion] of the pin pulling groove position 18 remains outside the collar 32, it would still be possible to install the fastener* … but this might require two successive actuations of the installation tool."

(Kleinman, at [0028]; elements 11, 18, 20, 21, 32; FIG. 3C.) In other words, a POSITA would have recognized it is *not* an option to remove or materially shorten the plain portion 17 or the pull portion 28 of Kleinman's pin 11.

In addition, Kleinman pre-assembles and stakes the collar 32 to the sleeve head/flange 26 at three locations before installation, with the pin tail protruding through the staked collar 32. As Kleinman explains in relation to FIGS. 2A-2C:

> "The collar 32 is then assembled on to [sic] the sleeve by inserting the sleeve head flange 26 into the collar recess 37 so that the sleeve head end face 29 contacts the annular face 41 of the collar recess. The sleeve and collar are then removably secured together by staking down the collar head adjacent the recess 37 at three positions around the periphery of the recess, to deform the head material at those positions over and into contact with the conical face 27 of the sleeve head, to form three lugs or projections 38. *The pin plain portion 17 protrudes from the end face of the collar 32*."

(Kleinman at [0024]; *see* elements 17, 26, 27, 29, 32, 37, 38, 41.) Thus, during handling and insertion—but before tool engagement—the tail/end section (including the pulling groove section 18) *must* protrude sufficiently beyond the collar 32 that is already fixed in three places over the sleeve head 25, enabling hammering and axial force application without contacting or deforming the staked collar 32 or sleeve head 25, and preserving enough protrusion for subsequent gripping—even after an axial shift event—"provided that sufficient [sic] of the pin pulling groove position 18

remains outside the collar 32." (Kleinman at [0028].) These disclosures make clear that Kleinman's pulling groove section 18 *must* sufficiently protrude and be mechanically robust to: (i) accept direct hammer blows on the projecting tail end of pin 11 to overcome interference fits or misalignment; (ii) transmit high axial forces to seat the sleeve head 26 against the near face 45 of the workpiece; and (iii) still retain adequate protrusion for engagement by the installation tool jaws 49 even if the interference fit at portion 20 is overcome and the pin 11 shifts axially relative to sleeve 21. (Kleinman at [0027]–[0028]; elements 11, 18, 20, 21, 26, 45, 49; FIGS. 3B–3C, 4A.)

As explained previously, Brewer's pull portion *must* be short, with Brewer requiring "L = 0.936 D (and more generally … 0.7 D to 1.2 D)" and must also be designed for engagement by a non-protruding internal collet lip 110 as the collet 102 is drawn into a nosepiece/anvil 112. (Brewer at [0042], [0072], [0075]-[0076], [0088], FIGS. 5A, 12.) Brewer does not disclose, teach, or suggest that its short tail 20/80 is intended to receive hammer blows, withstand pre-installation axial seating loads, or remain sufficiently protruding after unintended axial shift of the pin 11 relative to the sleeve 21 to enable subsequent tool engagement. Rather, as a non-blind fastener, the only portion of Brewer that could be susceptible to hammer strikes is its opposite end, i.e., pin head 8, when the pin 4 is inserted through the workpieces 130, 140 prior to the collar 10 being applied thereto. (Brewer at FIGS. 6-7.) Indeed,

Brewer's asserted advantages (easier engagement, reduced sensitivity to angular/axial positioning, less clogging, simpler manufacture, reduced pitch-error sensitivity) are all tied to the deep single groove 20 on a short tail 6 engaged by a non-protruding collet lip 110. (Brewer at [0015]–[0017], [0042]–[0044], [0088].)

A POSITA, faced with Kleinman's explicit pre-installation requirements and its pre-staked collar 32 assembly would have recognized that replacing Kleinman's multi-groove pulling section 18—purpose-built to protrude and accept hammer blows and large axial seating forces—with Brewer's short, differently designed pull portion 20/80 would improperly compromise Kleinman's disclosed insertion methods and jeopardize subsequent tool engagement, particularly under the contingency stated in Kleinman's paragraph 0028, where adequate protrusion must remain outside the collar 32. Consistent with its failure to conduct a proper *Graham* analysis, Petitioner offers no dimensional mapping, no mechanical rationale, and no modified installation procedure showing how Brewer's short tail 6 could withstand hammer blows on the projecting end, deliver the necessary axial seating loads to seat head 26 against near face 45, and still present sufficient accessible length for the tool jaws 49 after an axial shift event that exposes portion 20. (Kleinman at [0024], [0027]–[0028]; elements 11, 17, 18, 20, 21, 26, 32, 37, 38, 41, 45, 49.) Accordingly, Petitioner's proposed substitution is not a predictable use of prior art elements

according to their established functions, but is instead a hindsight reconstruction that sacrifices Kleinman's core functional requirements and Brewer's own teachings.

Additional adjustments to Brewer and/or Kleinman are not explained in the Petition and nonetheless would be fruitless. First, "adjusting standout" by lengthening Brewer's tail L abandons Brewer's core short-tail teaching and its asserted benefits (easier engagement, reduced alignment sensitivity, lower clogging, simpler manufacture, reduced pitch-error sensitivity), which are tied to L within 0.7D–1.2D (exemplified L = 0.936D) and a non-protruding collet. (Brewer at [0072], [0075]–[0076], [0042].) Kleinman, moreover, requires a projecting tail that protrudes sufficiently through a pre-assembled, three-point staked collar 32 over sleeve head/flange 26 (projections 38) to survive hammer blows and large axial seating forces and still leave enough of pulling groove section 18 accessible even after axial shift. (Kleinman at [0024], [0027]–[0028]; FIGS. 2A–2C, 3B–3C.) Such needs are incompatible with Brewer's short-tail requirements.

Second, "swapping jaws for collet" is not possible without a complete redesign. Kleinman's jaws 49 and anvil 47 operate in a **blind** configuration to form the blind head and swage collar 32 into grooves 15. (Kleinman at [0031]–[0033]; FIGS. 4A–5B.) Conversely, Brewer's non-protruding collet lip 110 and tapered anvil 112 are designed for short exposed tails of **non-blind** lockbolts and explicitly avoid protrusion for safety and debris robustness. (Brewer at [0042]–[0044], [0088];

FIGS. 5A, 12.) Retrofitting Brewer's **non-blind** collet architecture into Kleinman would contradict Brewer's tool teachings and materially disrupt Kleinman's blind swaging geometry and in a manner in which a POSITA would find unacceptable.

Third, invoking Brewer's breaker groove does not cure the mismatch. (Brewer at [0092]; FIG. 16.) Kleinman fractures at the breakneck 16 only after swaging under further increased force and contemplates pre-install hammering. (Kleinman at [0027], [0034].) However, a deeper single groove on a short tail such as Brewer heightens the risk of premature fracture under those contingencies, and Brewer provides no calibration for Kleinman's force path.

Finally, Petitioner's broad contentions that Brewer "applies" to blind fasteners ignore that Brewer's benefits are taught for **non-blind** lockbolts with exposed tails, while Kleinman's **blind** assembly imposes distinct, cited constraints. Petitioner identifies no Kleinman-specific deficiency that Brewer would remedy. In short, the proposed substitution requires abandoning Brewer's core teachings and disturbing Kleinman's pre-staked collar/blind installation geometry—without a problem to solve—i.e., the combination lacks a supported rationale and is not a predictable path for a POSITA. For at least the above reasons, a POSITA would not have been motivated to apply Brewer's teachings to Kleinman.

VI. GROUND D: PETITIONER'S GROUND D DOES NOT SAVE GROUND C

In Ground D, Petitioner asserts that claims 6-7, 11 and 20 of the ’358 Patent are obvious over Kleinman in view of Brewer, and in further view of Kendall and Fulbright. (Petition at 77-78.) More particularly, Kendall and Fulbright are cited for allegedly disclosing the hardness values recited in dependent claims 6 and 7 and the composition of the blind fastener as being metal in dependent claims 11 and 20 (Petition at 77-78). Without conceding Petitioner’s allegations, Kendall and Fulbright do not cure the deficiencies of the combination of Kleinman and Brewer as detailed in Patent Owner’s reply to Ground C, above. Accordingly, Petitioner has not carried its burden to show that claims 6-7, 11 and 20 are obvious over Kleinman in view of Brewer, Kendall, and Fulbright.

VII. CONCLUSION

For the above reasons, Patent Owner respectfully requests that the Board discretionarily deny the Petition and decline to institute a trial in this IPR.

Respectfully submitted,
GREENBERG TRAURIG, LLP

Date: January 28, 2026

By: */hjb/*

Heath J. Briggs (Reg. No. 54,919)
Greenberg Traurig, LLP
1144 15th St. Suite 3300
Denver, CO 80202
Telephone: 303-685-7418
Facsimile: 720-904-6118
BriggsH@gtlaw.com

Joseph Agostino (Reg. No. 51,191)

Greenberg Traurig, LLP
500 Campus Drive, Suite 400
Florham Park, NJ 07932-0677
Telephone: 973-443-3572
Facsimile: 973-295-1292
joseph.agostino@gtlaw.com
Counsel for Patent Owner

CERTIFICATE OF SERVICE

The undersigned certifies that the foregoing **PATENT OWNER'S PRELIMINARY RESPONSE** was served on the following counsel via electronic mail:

Jack Barufka
Benjamin Kiersz
PILLSBURY WINTHROP SHAW PITTMAN LLP

jack.barufka@pillsburylaw.com;
benjamin.kiersz@pillsburylaw.com; and
docket_ip@pillsburylaw.com.

GREENBERG TRAURIG, LLP

Date: January 28, 2026

By: */hjb/*
Heath J. Briggs (Reg. No. 54,919)
Greenberg Traurig, LLP
1144 15th St. Suite 3300
Denver, CO 80202
Telephone: 303-685-7418
Facsimile: 720-904-6118
BriggsH@gtlaw.com
Counsel for Patent Owner

CERTIFICATE OF WORD COUNT

Pursuant to 37 C.F.R. § 42.24, the undersigned certifies that the foregoing **PATENT OWNER'S PRELIMINARY RESPONSE** contains 6,818 words, not including the portions excepted by Rule 42.24. This brief is compliant with the word count requirements of Rule 42.24.

GREENBERG TRAURIG, LLP

Date: January 28, 2026

By: */hjb/*

Heath J. Briggs (Reg. No. 54,919)
Greenberg Traurig, LLP
1144 15th St. Suite 3300
Denver, CO 80202
Telephone: 303-685-7418
Facsimile: 720-904-6118
BriggsH@gtlaw.com
Counsel for Patent Owner