UNITED STATES PATENT AND TRADEMARK OFFICE

BEFORE THE PATENT TRIAL AND APPEAL BOARD

WHOOP, INC.,
Petitioner

v.

OMNI MEDSCI, INC.,
Patent Owner.

Case No. IPR2025-01584

U.S. Patent No. 10,874,304

Petition for *Inter Partes* Review of U.S. Patent No. 10,874,304

TABLE OF CONTENTS

Page

I. INTRODUCTION 1
II. MANDATORY NOTICES 3
A. Real Party-in-Interest 3
B. Related Matters 3
C. Lead and Backup Counsel 7
D. Service Information 8
III. PAYMENT OF FEES 8
IV. REQUIREMENTS OF *INTER PARTES* REVIEW 8
A. Standing 8
B. Identification of Challenge and Relief Requested 9
1. Lisogurski 9
2. Carlson 10
3. Debreczeny 10
4. Soller 10
5. Tran 11
6. Valencell-093 11
7. Grounds 11
C. How the Challenged Claims Are to Be Construed Under 37 C.F.R. § 42.104(b)(3) 12
D. How the Challenged Claims Are Unpatentable Under 37 C.F.R. § 42.104(b)(4) 13
E. Supporting Evidence Under 37 C.F.R. § 42.104(b)(5) 13
V. THRESHOLD REQUIREMENT FOR *INTER PARTES* REVIEW 13
VI. PATENT OVERVIEW 14
A. Person of Ordinary Skill in the Art 14
B. State of the Art 14
1. Photoplethysmography 15

2. Market Trends for Wearable Sensors 16
C. Alleged Invention of The '304 Patent 19
D. Prosecution History of The '304 Patent 20
VII. GROUNDS OF UNPATENTABILITY 21
A. Collateral Estoppel 21
B. Ground 1: Claims 1, 11, 19-20, and 25 would have been obvious over Lisogurski in view of Carlson. 22
1. Overview of Ground 1 22
a) Lisogurski 22
b) Carlson 24
c) Motivation to Combine 25
2. Analysis of Ground 1 28
a) Claim 1[pre], 11[pre], 19[pre]: 28
b) Claim 1[a], 11[a]-[b], 19[a]-[b], 19[h] 19[j]: 28
c) Claim 1[b], 11[a], 19[a]: 32
d) Claim 1[c], 11[c], 19[c]: 32
e) Claim 1[d], 11[c], 19[c]: 33
f) Claim 1[e], 11[d], 19[d]: 36
g) Claim 1[f], 11[e], 19[c]: 38
h) Claim 1[g], 11[f], 19[k]: 39
i) Claim 1[h], 11[g]: 40
j) Claim 1[i], 11[h], 19[e]: 41
k) Claim 1[j], 11[i], 19[f]: 43
l) Claim 1[k], 11[j], 19[h]-[i]: 44
m) Claim 1[l], 11[k], 19[l]-[m]: 45
n) Claim 1[m], 11[k], 19[n] 47
o) Claim 1[n], 11[k] 19[o]: 47
p) Claim 1[o], 11[k], 19[p]: 48
q) Claim 1[p], 11[l], 25[a]: 49

r) Claim 1[q], 11[l], 25[a]: 50
s) Claim 1[r], 11[l], 25[b]: 50
t) Claim 1[s], 11[l], 25[c]-[d]: 51
u) Claim 19[g]: 51
v) Claim 20: 52
C. Ground 2: Claim 3 would have been obvious over Lisogurski in view of Carlson and Debreczeny. 55
1. Overview of Ground 2 55
a) Debreczeny 55
b) Motivation to combine 57
2. Analysis of Ground 2 58
a) Claim 3: 58
D. Ground 3: Claims 2, 14, and 27 would have been obvious over Lisogurski in view of Carlson and Valencell-093. 59
1. Overview of Ground 3 59
a) Valencell-093 59
b) Motivation to combine 60
2. Analysis of Ground 3 61
a) Claims 2, 14, 27: 61
E. Ground 4: Claims 4-8, 10, 15-18, and 21-24 would have been obvious over Lisogurski in view of Carlson and Soller. 64
1. Overview of Ground 4 64
a) Soller 64
b) Motivation to Combine 65
2. Analysis of Ground 4 66
a) Claim 4-6, 15-16, 21, 22: 66
b) Claim 7, 17, 23: 71
c) Claim 8, 18, 24: 73
d) Claim 10: 74

F. Ground 5: Claims 12-13 and 26 would have been obvious over Lisogurski in view of Carlson and Tran 75
1. Overview of Ground 5 75
a) Tran 75
b) Motivation to combine 75
2. Analysis of Ground 5 77
a) Claim 12[a], 26[a]: 77
b) Claim 12[b], 26[b]: 78
c) Claim 12[c], 26[c]: 80
d) Claim 13: 82
G. Ground 6: Claim 9 would have been obvious over Lisogurski in view of Carlson, Soller, and Tran. 83
1. Overview of Ground 6 83
a) Motivation to combine 83
2. Analysis of Ground 6 83
a) Claim 9[a]: 83
b) Claim 9[b]: 83
c) Claim 9[c]: 84
VIII. SECONDARY CONSIDERATIONS 84
IX. CONCLUSION 84
APPENDIX A: CHALLENGED CLAIM LISTING 86

TABLE OF AUTHORITIES

Cases

Apple Inc. v. Omni MedSci, Inc.,
IPR2019-00916, Paper No. 39 (P.T.A.B. Oct. 14, 2020) 4

Apple Inc. v. Omni MedSci, Inc.,
IPR2021-00453, Patent Owner's Notice of Appeal (P.T.A.B. Apr. 11, 2025) 4, 5

Apple Inc. v. Omni MedSci, Inc.,
No. 23-1034, 2024 WL 3084509 (Fed. Cir. Jun. 21, 2024) 5

Google LLC v. Hammond Dev. Int'l,
54 F.4th 1377 (Fed. Cir. 2022) 21, 22

HTC Corp. v. Cellular Commc'ns Equip., LLC,
877 F.3d 1361 (Fed. Cir. 2017) 12

Intel Corp. v. PACT XPP Schweiz AG,
61 F.4th 1373 (Fed. Cir. 2023) 70, 73

Kennametal, Inc. v. Ingersoll Cutting Tool Co.,
780 F. 3d 1376 (Fed. Cir. 2015) 47

Ohio Willow Wood Co. v. Alps S., LLC,
735 F.3d 1333 (Fed. Cir. 2013) 21

Omni MedSci, Inc. v. Apple Inc.,
No. 21-1229, 2022 WL 2062168 (Fed. Cir. Jun. 8, 2022) 4

Omni MedSci, Inc. v. Apple Inc.,
No. 25-1646 (Fed. Cir.) 5

Omni MedSci, Inc. v. Apple Inc.,
No. 4:19-cv-05924 (N.D. Cal.) 4

Omni MedSci, Inc. v. Samsung Elecs., et al.,
No. 2:24-cv-01070 (E.D. Tex.) 3

Omni MedSci, Inc. v. WHOOP, Inc.,
No. 1:25-cv-00140 (D. Del.) 3

Papst Licensing GmbH & Co. KG v. Samsung Elecs. Am., Inc.,
924 F.3d 1243 (Fed. Cir. 2019) 2, 21

POSCO Co., Ltd. v. ArcelorMittal,
IPR2025-00370, Paper No. 10 (P.T.A.B. Jun. 25, 2025) 2

Samsung Elecs. Co. et al. v. Omni MedSci, Inc.,
IPR2025-01250, Paper No. 1 (P.T.A.B. Aug. 5, 2025) 6

Samsung Elecs. Co. et al. v. Omni MedSci, Inc.,
IPR2025-01251, Paper No. 1 (P.T.A.B. Aug. 5, 2025) 5

Samsung Elecs. Co. et al. v. Omni MedSci, Inc.,
IPR2025-01252, Paper No. 1 (P.T.A.B. Aug. 5, 2025) 6

Samsung Elecs. Co. et al. v. Omni MedSci, Inc.,
IPR2025-01253, Paper No. 1 (P.T.A.B. Aug. 5, 2025) 6

Samsung Elecs. Co. et al. v. Omni MedSci, Inc.,
IPR2025-01254, Paper No. 1 (P.T.A.B. Aug. 5, 2025) 6

Samsung Elecs. Co. et al. v. Omni MedSci, Inc.,
PGR2025-00063, Paper No. 1 (P.T.A.B. Aug. 5, 2025) 6

Samsung Elecs. Co. et al. v. Omni MedSci, Inc.,
PGR2025-00064, Paper No. 1 (P.T.A.B. Aug. 5, 2025) 6

Samsung Elecs. Co., Ltd. v. Netlist, Inc.,
IPR2025-00002, Paper 17 (P.T.A.B. May 15, 2025) 21

Soverain Software LLC v. Victoria's Secret Direct Brand Mgmt.,
LLC, 778 F.3d 1311 (Fed. Cir. 2015) 21

United Therapeutics Corp. v. Liquidia Techs., Inc.,
74 F.4th 1360 (Fed. Cir. 2023) 22

Statutes

35 U.S.C. § 102(a) 9, 10, 11

35 U.S.C. § 102(b) 9, 10, 11

35 U.S.C. § 102(e) 9, 10, 11

35 U.S.C. § 103 ..... 1, 9, 11

35 U.S.C. § 282(b) 12

35 U.S.C. § 314(a) 13, 14

35 U.S.C. § 315(e)(1) 8

Regulations

37 C.F.R. § 42.8(b)(3) 7

37 C.F.R. § 42.8(b)(4) 7

37 C.F.R. § 42.10(a) 7

37 C.F.R. § 42.10(b) 8

37 C.F.R. § 42.10(c) 7

37 C.F.R. § 42.15(a) 8
37 C.F.R. § 42.63(e) 13
37 C.F.R. § 42.73(d)(3) 2
37 C.F.R. § 42.100(b) 12
37 C.F.R. § 42.103 8
37 C.F.R. § 42.104(a) 8
37 C.F.R. § 42.104(b) 9, 12, 13
83 F.R. 51358 (2018) 12

PETITIONERS' EXHIBIT LIST

Exhibit No.	Description
1001	U.S. Patent No. 10,874,304
1002	File History, U.S. Patent No. 10,874,304
1003	Declaration of Patrick Mercier, PhD
1004	U.S. Patent No. 9,651,533
1005	U.S. Patent No. 10,517,484
1006	Docket Sheet, *Omni MedSci, Inc. v. WHOOP, Inc.*, No. 1:25-cv-00140 (D. Del.)
1007	Docket Sheet, *Omni MedSci, Inc. v. Samsung Elecs.*, et al., No. 2:24-cv-01070 (E.D. Tex.)
1008	*Apple Inc. v. Omni MedSci, Inc.*, IPR2019-00916, Paper No. 39 (P.T.A.B. Oct. 14, 2020) (Final Written Decision, '533 IPR)
1009	*Omni MedSci, Inc. v. Apple Inc.*, No. 21-1229, 2022 WL 2062168 (Fed. Cir. Jun. 8, 2022) (summary affirmance, '533 IPR)
1010	Apple Inc. v. Omni MedSci, Inc., IPR2021-00453, Patent Owner's Notice of Appeal (P.T.A.B. Apr. 11, 2025)
1011	*Apple Inc. v. Omni MedSci, Inc.*, IPR2021-00453, Paper No. 22 (P.T.A.B. Aug. 3, 2022) (First Final Written Decision, '484 IPR)
1012	*Apple Inc. v. Omni MedSci, Inc.*, No. 23-1034, 2024 WL 3084509 (Fed. Cir. Jun. 21, 2024) (First Federal Circuit Decision, '484 IPR)
1013	*Apple Inc. v. Omni MedSci, Inc.*, IPR2021-00453, Paper No. 26 (P.T.A.B. Feb. 14, 2025) (Second Final Written Decision, '484 IPR)
1014	Docket Sheet, *Omni MedSci, Inc. v. Apple Inc.*, No. 25-1646 (Fed. Cir.) (Docket Sheet, Second Federal Circuit Appeal, '484 IPR)
1015	*Apple Inc. v. Omni MedSci, Inc.*, IPR2019-00916, Paper No. 1 (P.T.A.B. Apr. 10, 2019) (Petition, '533 IPR)
1016	RESERVED
1017	*Apple Inc. v. Omni MedSci, Inc.*, IPR2019-00916, Paper No. 16, (P.T.A.B. Oct. 18, 2019) (Institution Decision, '533 IPR)
1018	*Apple Inc. v. Omni MedSci, Inc.*, IPR2019-00916, Paper No. 23 (P.T.A.B. Jan. 31, 2020) (Patent Owner Response)

Exhibit No.	Description
1019	RESERVED
1020	RESERVED
1021	*Apple Inc. v. Omni MedSci, Inc.*, IPR2021-00453, Paper No. 1, (P.T.A.B. Jan. 22, 2021) (Petition, '484 IPR)
1022	RESERVED
1023	*Apple Inc. v. Omni MedSci, Inc.*, IPR2021-00453, Paper No. 7 (P.T.A.B. Aug. 6, 2021) (Institution Decision, '484 IPR)
1024	*Apple Inc. v. Omni MedSci, Inc.*, IPR2021-00453, Paper No. 10 (P.T.A.B. Nov. 12, 2021) (Patent Owner Response, '484 IPR)
1025	RESERVED
1026	RESERVED
1027	U.S. Patent No. 9,241,676 (Lisogurski)
1028	U.S. Patent App. Pub. No. 2005/0049468 ("Carlson")
1029	U.S. Patent No. 8,175,667 ("Debreczeny")
1030	U.S. Patent No. 6,304,767 ("Soller")
1031	U.S. Patent No. 8,108,036 ("Tran")
1032	U.S. Patent Appl. Pub. No. 2012/0197093 ("Valencell-093")
1033	"The Biomedical Engineering Handbook," by Joseph D. Bronzino (1995)
1034	Patel, et al., A review of wearable sensors and systems with application rehabilitation, *Journal of Neuroengineering & Rehabilitation* (2012)
1035	A. Omre, Bluetooth Low Energy: Wireless Connectivity for Medical Monitoring, *Journal of Diabetes Science & Technology* (Mar. 2010)
1036	P. Baum, et al., Strategic Intelligence Monitor on Personal Health Systems, Phase 2: Market Developments - Remote Patient Monitoring and Treatment, Telecare, Fitness/Wellness and mHealth, JRC *Scientific and Policy Reports of European Commission* (2013)
1037	M. Kranz, et al., The mobile fitness coach: Towards individualized skill assessment using personalized mobile devices, *Pervasive and Mobile Computing* (June 2012)
1038	M. Swan, Senior Mania! The Internet of Things, Wearable Computing, Objective Metrics, and the Quantified Self 2.0, *Journal of Sensor and Actuator Networks* (2012)

Exhibit No.	Description
1039	RESERVED
1040	"The Usage of Tablets in the HealthCare Industry," by Rauf Adil, available through the Internet Archive at https://web.archive.org/web/20121014002306/https://www.healthcareitnews.com/blog/usage-tablets-healthcare-industry (last accessed Sept. 4, 2025)
1041	Remote Deposition of Duncan Leo MacFarlane, Ph.D., P.E., *Apple Inc. v. Omni MedSci, Inc.*, IPR2019-00916 (PTAB April 16, 2020)
1042	Curriculum Vitae of Patrick Mercier, PhD
1043	Docket Sheet, *Omni MedSci, Inc. v. Apple Inc.*, No. 4:19-cv-05924 (N.D. Cal.)
1044	RESERVED
1045	Webster, J. G. (1997) Design of Pulse Oximeters, IOP Publishing
1046	RESERVED
1047	RESERVED
1048	RESERVED
1049	RESERVED
1050	*Samsung Elecs. Co. et al. v. Omni MedSci, Inc.*, IPR2025-01250, Paper No. 1 (P.T.A.B. Aug. 5, 2025) (533 IPR Petition)
1051	*Samsung Elecs. Co. et al. v. Omni MedSci, Inc.*, IPR2025-01251, Paper No. 1 (P.T.A.B. Aug. 5, 2025) (304 IPR Petition)
1052	*Samsung Elecs. Co. et al. v. Omni MedSci, Inc.*, IPR2025-01252, Paper No. 1 (P.T.A.B. Aug. 5, 2025) (455 IPR Petition)
1053	*Samsung Elecs. Co. et al. v. Omni MedSci, Inc.*, IPR2025-01253, Paper No. 1 (P.T.A.B. Aug. 5, 2025) (790 IPR Petition)
1054	*Samsung Elecs. Co. et al. v. Omni MedSci, Inc.*, PGR2025-00064, Paper No. 1 (P.T.A.B. Aug. 5, 2025) (790 PGR Petition)
1055	*Samsung Elecs. Co. et al. v. Omni MedSci, Inc.*, IPR2025-01254, Paper No. 1 (P.T.A.B. Aug. 5, 2025) (475 IPR Petition)
1056	*Samsung Elecs. Co. et al. v. Omni MedSci, Inc.*, IPR2025-00063, Paper No. 1 (P.T.A.B. Aug. 5, 2025) (475 PGR Petition)
1057	RESERVED
1058	U.S. Patent No. 11,160,455

Exhibit No.	Description
1059	U.S. Patent No. 12,193,790
1060	U.S. Patent No. 12,268,475
1061	*Omni MedSci, Inc. v. Apple Inc.*, No. 25-1646, Dkt. 17 (Fed. Cir. Sept. 11, 2025) (Omni's Corrected Opening Brief)

I. INTRODUCTION

WHOOP, Inc. ("Petitioner" or "WHOOP") petitions for *inter partes* review of U.S. Patent No. 10,874,304 (EX1001), assigned to Omni MedSci, Inc. ("Omni" or "Patent Owner"), and seeks cancellation of claims 1-27 ("the Challenged Claims") because they are unpatentable under 35 U.S.C. § 103.

The Challenged Claims are nearly identical to those the Board previously found unpatentable following IPRs of two parent patents of the '304 patent (U.S. Patent Nos. 9,651,533 (the "'533 patent") (EX1004) and 10,517,484 (the "'484 patent") (EX1005)). Those prior IPRs asserted four of the six prior art references asserted in this Petition. Not a single challenged claim in the parent patents withstood those IPRs. And the Federal Circuit has affirmed the unpatentability of all but a handful of these related claims (Omni's appeal as to claims 3-6 and 8-14 of the '484 patent remains pending, and involves just one limitation across those claims).

Notably, in the related IPRs, Omni did not dispute the prior art disclosed nearly all of the claims' limitations, nor did Omni challenge motivation to combine the majority of the asserted prior art references (which, again, significantly overlap with the prior art references in this Petition). Thus, based on Omni's positions in the related IPRs and the significant overlap of the Challenged Claims with the claims at issue in those IPRs, Omni has all but conceded the Challenged Claims are

unpatentable and is collaterally estopped from challenging the majority of the Challenged Claims' limitations.

Yet despite the unfavorable rulings Omni received in the related IPRs (including two adverse Federal Circuit decisions) and despite being "precluded from taking action inconsistent with [an] adverse judgment," 37 C.F.R. § 42.73(d)(3), Omni continues to assert the '304 Patent (and even the parent patents that received the unfavorable IPR decisions) in district court litigation. The Board must prevent Omni from enforcing (and obtaining) claims that are "not patentably distinct" from the unpatentable claims of the '533 and '484 patents. *Id.*; *see also Papst Licensing GmbH & Co. KG v. Samsung Elecs. Am., Inc.*, 924 F.3d 1243, 1252-53 (Fed. Cir. 2019) (issue preclusion prevents a patentee from raising arguments previously rejected for related patents).

Instituting this Petition would be an efficient use of the Board's limited resources, given the significant overlap between the Challenged Claims and the nearly-identical ones the Board has already found unpatentable. *See POSCO Co., Ltd. v. ArcelorMittal*, IPR2025-00370, Paper No. 10 (P.T.A.B. Jun. 25, 2025) (denying discretionary denial based on a previous, successful IPR "invalidating all the claims of…a parent to the challenged patent"); *Papst*, 924 F.3d at 1252 ("given the heavy burdens [Patent Owner] placed on its adversaries, the Board, and th[e] court by waiting so long to abandon defense of the [previous] patent claims," the

patentee was "without a meaningful basis to argue for systemic efficiencies as a possible reason for an exception to issue preclusion").

Petitioner respectfully requests the Board institute IPR proceedings and cancel the Challenged Claims.

II. MANDATORY NOTICES

A. Real Party-in-Interest

The real party-in-interest is WHOOP, Inc. No unnamed entity is funding, controlling, or directing this Petition, or otherwise has had an opportunity to control or direct this Petition or Petitioner's participation in any resulting IPR.

B. Related Matters

The '304 patent is the subject of multiple patent litigation suits brought by Patent Owner Omni MedSci, Inc., including against Petitioner:

- *Omni MedSci, Inc. v. WHOOP, Inc.*, No. 1:25-cv-00140 (D. Del.) (EX1006) (the "Delaware action"); and
- *Omni MedSci, Inc. v. Samsung Elecs., et al.*, No. 2:24-cv-01070 (E.D. Tex.) (EX1007) (the "Texas action").

In addition, as mentioned, the ’304 patent is a child of the related ’484 and ’533 patents through a series of continuations.[1]

- Omni asserted the ’533 and ’484 patents in previous litigations, including against Apple Inc. *See Omni MedSci, Inc. v. Apple Inc.*, No. 4:19-cv-05924 (N.D. Cal.) (EX1043)
- The ’533 patent was subject to IPR in *Apple Inc. v. Omni MedSci, Inc.*, IPR2019-00916, Paper No. 39 (P.T.A.B. Oct. 14, 2020) (EX1008) (the “’533 IPR”), in which the Board held all challenged claims (claims 5, 7-10, 13, and 15-17) unpatentable as obvious. The Federal Circuit affirmed. *Omni MedSci, Inc. v. Apple Inc.*, No. 21-1229, 2022 WL 2062168 (Fed. Cir. Jun. 8, 2022) (EX1009).
- The ’484 patent is the subject of an ongoing IPR before the Board, where all claims have been challenged as obvious. *See Apple Inc. v. Omni MedSci, Inc.,* IPR2021-00453, Patent Owner’s Notice of Appeal (P.T.A.B. Apr. 11, 2025) (EX1010) (the “’484 IPR”). The Board initially held that claims 1, 2, 7, and 15-23 are unpatentable as obvious, but that the Petitioner had not shown

[1] The ’533 patent is asserted in both the Delaware and Texas actions. The ’484 patent was recently dismissed from the Delaware action, but remains asserted in the Texas action. EX1004; EX1005.

claims 3-6 and 8-14 are unpatentable. *Id.*, Paper No. 22 (P.T.A.B. Aug. 3, 2022) (EX1011). Apple appealed as to claims 3-6 and 8-14,[2] and the Federal Circuit reversed and remanded for the Board to consider whether those claims are unpatentable as obvious under an alternative argument. *Apple Inc. v. Omni MedSci, Inc.*, No. 23-1034, 2024 WL 3084509 (Fed. Cir. Jun. 21, 2024) (EX1012). On remand, the Board held claims 3-6 and 8-14 unpatentable as obvious. IPR2021-00453, Paper No. 26 (P.T.A.B. Feb. 14, 2025) (EX1013). Thus, all claims of the '484 patent have been held unpatentable by the Board. Omni appealed the Board's remand decision as to claims 3-6 and 8-14, and the appeal remains pending. *Omni MedSci, Inc. v. Apple Inc.*, No. 25-1646 (Fed. Cir.) (EX1014).

Finally, the defendants in the pending Texas action have recently filed several IPR and PGR challenges against this patent family, including the '304 patent, listed below:

- *Samsung Elecs. Co. et al. v. Omni MedSci, Inc.*, IPR2025-01251, Paper No. 1 (P.T.A.B. Aug. 5, 2025) (EX1051) – challenging certain claims of the '304 patent

[2] Omni did not cross-appeal the claims held to be unpatentable (1, 2, 7, and 15-23), and the Federal Circuit therefore affirmed as to those claims. EX1012, n.2.

- *Samsung Elecs. Co. et al. v. Omni MedSci, Inc.*, IPR2025-01250, Paper No. 1 (P.T.A.B. Aug. 5, 2025) (EX1050) – challenging certain claims of the ’533 patent
- *Samsung Elecs. Co. et al. v. Omni MedSci, Inc.*, IPR2025-01252, Paper No. 1 (P.T.A.B. Aug. 5, 2025) (EX1052) – challenging certain claims of U.S. Patent No. 11,160,455 (the “’455 patent”) (EX1058), a child patent to the ’304 patent
- *Samsung Elecs. Co. et al. v. Omni MedSci, Inc.*, IPR2025-01253, Paper No. 1 (P.T.A.B. Aug. 5, 2025) (EX1053) – challenging certain claims of U.S. Patent No. 12,193,790 (the “’790 patent”) (EX1059), a child patent to the ’304 patent
- *Samsung Elecs. Co. et al. v. Omni MedSci, Inc.*, PGR2025-00064, Paper No. 1 (P.T.A.B. Aug. 5, 2025) (EX1054) – challenging certain claims of the ’790 patent
- *Samsung Elecs. Co. et al. v. Omni MedSci, Inc.*, IPR2025-01254, Paper No. 1 (P.T.A.B. Aug. 5, 2025) (EX1055) – challenging certain claims of U.S. Patent No. 12,268,475 (the “’475 patent”) (EX1060), a child patent to the ’304 patent
- *Samsung Elecs. Co. et al. v. Omni MedSci, Inc.*, PGR2025-00063, Paper No. 1 (P.T.A.B. Aug. 5, 2025) (EX1056) – challenging certain claims of the ’475 patent

C. Lead and Backup Counsel

Pursuant to 37 C.F.R. §§ 42.8(b)(3), 42.8(b)(4), and 42.10(a), (c), Petitioners provide the following designation of counsel:

Lead Counsel	Back-up Counsel
Jaysen S. Chung Reg. Number: 68,199 Gibson, Dunn & Crutcher LLP One Embarcadero Center, Suite 2600 San Francisco, CA 94111-3715 Tel: 415-393-8271 JSChung@gibsondunn.com	**First Back-Up Counsel** Brian Rosenthal (Notice of Intent to Designate Provisionally Recognized PTAB Attorney forthcoming) Gibson, Dunn & Crutcher LLP 200 Park Avenue New York, NY 10166-0193 Tel: 212-351-2339 BRosenthal@gibsondunn.com **Additional Backup Counsel** Y. Audrey Yang Reg. Number: 74,393 Gibson, Dunn & Crutcher LLP 2001 Ross Ave., Suite 2100 Dallas, TX 75201 Tel: 214-698-3215 AYang@gibsondunn.com

Petitioner respectfully provides notice that it will file a Notice of Intent to Designate a Provisionally Recognized PTAB Attorney as Back-up Counsel under 37 C.F.R. § 42.10(c)(2) for Brian Rosenthal. Petitioner will file the Notice 21 days

after service of this petition. Pursuant to 37 C.F.R. § 42.10(b), powers of attorney accompany this Petition.

D. Service Information

Service via hand delivery or postal mail may be made at the addresses of the lead and back-up counsel above. Petitioner consents to electronic service, and service at GDC-Omni-Whoop@gibsondunn.com.

III. PAYMENT OF FEES

Pursuant to 37 C.F.R. §§ 42.103 and 42.15(a), the required fee is being submitted herewith. The Office is authorized to charge any fee deficiency, or credit overpayment, to deposit account no. 50-1408. Any additional fees due in connection with this Petition may be charged to the foregoing account.

IV. REQUIREMENTS OF *INTER PARTES* REVIEW

A. Standing

Pursuant to 37 C.F.R. § 42.104(a), Petitioner certifies that the ’304 patent is available for IPR and that Petitioner is not barred from requesting an IPR on the grounds identified in this Petition. Specifically, Petitioner certifies that: Petitioner has not filed a civil action challenging the validity of the ’304 patent; this petition is filed not more than one year from February 7, 2025, the date on which the Petitioner was served with the complaint alleging infringement of the ’304 patent; the estoppel provisions of 35 U.S.C. § 315(e)(1) do not prohibit this IPR; and this petition is filed

after the later of (a) the date that is nine months after the date of the grant of the '304 patent or (b) the termination of any post-grant review of the '304 patent.

B. Identification of Challenge and Relief Requested

Pursuant to 37 C.F.R. § 42.104(b), Petitioner requests the Board institute IPR of claims 1-27 of the '304 patent under pre-AIA[3] 35 U.S.C. § 103 on the prior art references and grounds described below:

1. Lisogurski

U.S. Patent No. 9,241,676 ("Lisogurski") (EX1027) qualifies as prior art under 35 U.S.C. § 102(a), (b), and/or (e). Lisogurski was filed May 31, 2012, and published December 5, 2013. In the '533 IPR, the Board found Lisogurski to be prior art, and the Federal Circuit affirmed that decision in full. EX1008, 2, 3 n.3,

[3] The '304 patent claims priority to 2012 provisional applications. *Infra* §§VI.D. However, the '304 patent was prosecuted as an AIA patent, and the applicant acknowledged at least one claim lacks/lacked priority to 2012. EX1002, 89-90, 266-86. WHOOP therefore does not believe the '304 patent is entitled to a 2012 priority date, but for the purposes of this IPR only, assumes the earliest possible priority date of December 31, 2012. The analysis herein would not change if AIA law applies.

aff'd, EX1009. In the '484 IPR, Omni did not dispute Lisogurski is prior art to this patent family based on Lisogurski's filing date. EX1024, 8.

2. Carlson

U.S. Patent App. Pub. No. 2005/0049468 ("Carlson") (EX1028) qualifies as prior art under 35 U.S.C. § 102(a), (b), and/or (e). Carlson was filed September 3, 2003, and published March 3, 2005. In the '533 IPR, the Board found Carlson to be prior art, and the Federal Circuit affirmed. EX1008, 2-3, *aff'd*, EX1009. In the '484 IPR, Omni did not dispute Carlson is prior art to this patent family. EX1024, 8.

3. Debreczeny

U.S. Patent No. 8,175,667 ("Debreczeny") (EX1029) qualifies as prior art under 35 U.S.C. §§ 102 (a), (b), and/or (e). Debreczeny was filed September 29, 2006, and issued May 8, 2012. It therefore pre-dates references Omni has admitted (and the Federal Circuit has confirmed) are prior art to this patent family.

4. Soller

U.S. Patent No. 6,304,767 ("Soller") (EX1030) qualifies as prior art under 35 U.S.C. § 102(a), (b), and/or (e). Soller was filed December 1, 1999, and issued October 16, 2001. It therefore pre-dates references Omni has admitted (and the Federal Circuit has confirmed) are prior art to this patent family.

5. Tran

U.S. Patent No. 8,108,036 ("Tran") (EX1031) qualifies as prior art under 35 U.S.C. § 102(a), (b), and/or (e). Tran was filed June 18, 2009, and issued January 31, 2012. In the '484 IPR, Omni did not dispute Tran is prior art to this patent family, the Board considered it as such, and Omni did not cross-appeal that finding, which was therefore affirmed. EX1024, 8-10; EX1011; EX1012, n.2.

6. Valencell-093

U.S. Patent Appl. Pub. No. 2012/0197093 ("Valencell-093") (EX1032) qualifies as prior art under 35 U.S.C. § 102(a), (b), and/or (e). Valencell-093 was filed January 25, 2012, and published August 2, 2012. In the '484 IPR, Omni did not dispute Valencell-093 is prior art to this patent family, the Board considered it as such, and Omni did not cross-appeal that finding, which was therefore affirmed. EX1024, 8-10; EX1011; EX1012, n.2.

7. Grounds

In this IPR, Petitioner applies the above references and asserts the following grounds of rejection under 35 U.S.C. § 103:

Ground	Claims	Basis for Rejection
1	1, 11, 19-20, 25	Obvious over Lisogurski in view of Carlson
2	3	Obvious over Lisogurski in view of Carlson and Debreczeny
3	2, 14, 27	Obvious over Lisogurski in view of Carlson and Valencell-093
4	4-8, 10, 15-18, 21-24	Obvious over Lisogurski in view of Carlson and Soller
5	12-13, 26	Obvious over Lisogurski in view of Carlson and Tran
6	9	Obvious over Lisogurski in view of Carlson, Soller, and Tran

C. How the Challenged Claims Are to Be Construed Under 37 C.F.R. § 42.104(b)(3)

A claim subject to *inter partes* review "shall be construed using the same claim construction standard that would be used to construe a claim in a civil action under 35 U.S.C. § 282(b)." 37 C.F.R. § 42.100(b) (November 13, 2018); 83 F.R. 51358 (2018). Petitioners do not believe any constructions impact the invalidity analyses set forth herein. *See HTC Corp. v. Cellular Commc'ns Equip., LLC*, 877 F.3d 1361, 1367-68 (Fed. Cir. 2017) (affirming the Board absent an express construction of a term). In the '484 IPR, the Board construed "identify an object," to mean: "to recognize or establish an object as being a particular thing," EX1011, 10, *aff'd* EX1012, *5. This term is similar to the "identification of an object" term

in Challenged Claims 9, 12, and 26, and Petitioner and Dr. Mercier applied the Board's prior construction here.

D. How the Challenged Claims Are Unpatentable Under 37 C.F.R. § 42.104(b)(4)

The following sections explain how the Challenged Claims are unpatentable under the statutory grounds identified above, including where each element of the claim is found in the prior art patents or printed publications.

E. Supporting Evidence Under 37 C.F.R. § 42.104(b)(5)

The exhibit numbers of the supporting evidence relied upon and the relevance of the evidence to the Challenged Claims, including an identification of specific portions of the evidence that support the challenge, are provided below. The technical information and grounds for unpatentability are further supported by the Declaration of Dr. Patrick Mercier (EX1003). A List of Exhibits is included in this paper pursuant to 37 C.F.R. § 42.63(e).

V. THRESHOLD REQUIREMENT FOR *INTER PARTES* REVIEW

Under 35 U.S.C. § 314(a), institution of IPR requires "a reasonable likelihood that the petitioners would prevail with respect to at least one of the claims challenged in the petition." This petition meets this threshold for each ground of unpatentability.

VI. PATENT OVERVIEW

A. Person of Ordinary Skill in the Art

A person of ordinary skill in the art ("POSITA") at the time of the alleged invention (December 2012) would have had good working knowledge of optical sensing techniques and their applications, and familiarity with optical system design and signal processing techniques. EX1003 ¶25. The POSITA would have an undergraduate degree in engineering (electrical, mechanical, biomedical, or optical) or a related field of study, along with relevant experience studying or developing physiological monitoring devices (*e.g.*, non-invasive optical biosensors) in industry or academia. *Id.* Lack of professional experience can be remedied by additional education, and vice versa. *Id.*

The Board adopted this definition in the previous IPRs. EX1023, 7-8; EX1008, 8-9.

B. State of the Art

The following concepts were well-known and widely used by POSITAs by December 31, 2012. EX1003 ¶45. Given the overlap between the '304 Patent and the '484/'533 patents, the background below is adopted from Apple's '484/'533 IPR petitions, so it has already been considered and accepted by the Board. *See* EX1021, 8-14; EX1015, 4-12.

1. Photoplethysmography

Photoplethysmography (PPG) is an optical sensing technique used in medical monitoring systems for decades. EX1003 ¶¶46-47; EX1033, 769-76, 1346-55. PPG works by shining light through a subject's tissue and measuring the light reflected back or transmitted through the tissue. EX1003 ¶47. Because different blood and tissue components (*e.g.*, hemoglobin) reflect different wavelengths of light, by measuring how much light is absorbed and how that amount changes over time, a PPG device can calculate the composition of the blood and tissue. EX1003 ¶47.

PPG systems use conventional optical components, like lenses, mirrors, filters, beam splitters, light sources, fiber optics, and detectors. EX1003, ¶¶46; EX1033, 764-66, 771. The figure below shows a typical PPG sensor: (1) light is directed onto a sample; (2) the sample reflects or transmits light back to the device; (3) a photodetector detects and filters the received light and then outputs a signal proportionate to the measured light intensity; and (4) analog-to-digital conversion and signal processing are performed on the signal to extract data. EX1003 ¶46; EX1033, 764-66. Portable PPG devices conventionally use light-emitting diodes (LEDs) as the light source because LEDs are small and have low power requirements. EX1003 ¶48; EX1033, 765, 771.

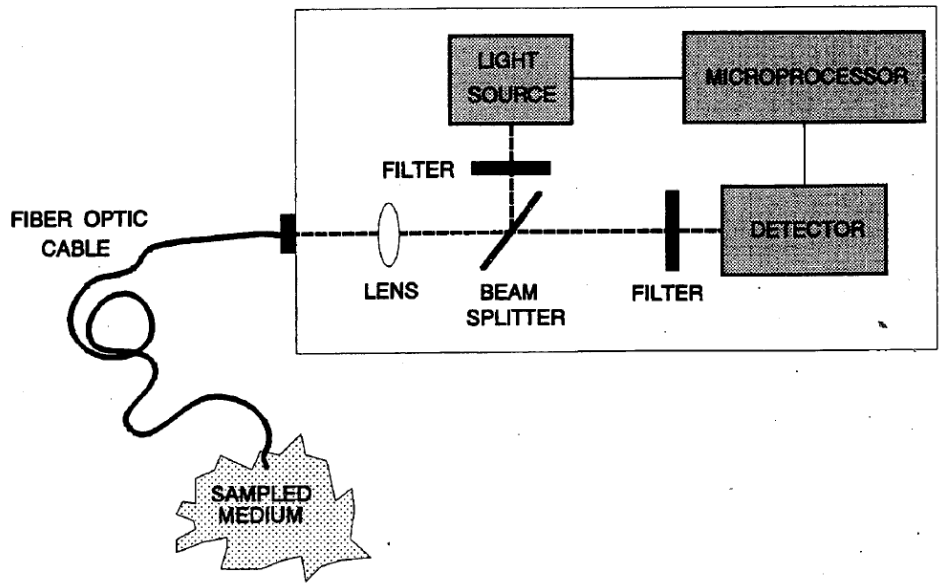

FIGURE 52.1 General diagram representing the basic building blocks of an optical instrument for optical sensor applications.

EX1033, 764-66.

To improve the signal-to-noise ratio (SNR) of the system, the light source is typically modulated and the detector typically uses "synchronized lock-in amplifier detection" techniques to isolate signals that occur at the modulation frequency, thereby reducing the amount of noise captured, and improving SNR. EX1003 ¶¶49-50; EX1033, 764-66.

2. Market Trends for Wearable Sensors

Market trends from 2000 to 2012 drove the medical device industry (and similar industries) to develop wearable sensors for measuring health data and communicating that data to remote devices. EX1003 ¶¶52-55. Four examples of such trends are described below.

First, the medical device industry developed wireless monitoring technologies that a patient could wear to allow transmission of medical data remotely to a physician. EX1003 ¶¶55-56; EX1034, 2; EX1035, 462; EX1036, 15-31.

Second, a market for commercial health and fitness devices emerged. EX1003 ¶¶52-54, 58-59. These devices, like "oximeters and heart rate monitors," were "formerly reserved for professional use," but by at least 2012 were "available" for consumers to "connect[] to smartphones." EX1037, 3; *see also* EX1028, [0004]; EX1038, 221; EX1032, [0003] ("growing market demand" for "personal health…monitors").

Third, the general market trend for miniaturizing electronics led to smaller, wearable monitoring systems with health and fitness applications. EX1003 ¶¶54, 58-59, 62; EX1034, 3; EX1037, 1-3.

Fourth, the medical industry began using personal devices and "apps" to deliver care and give patients access to biomedical data. EX1003 ¶¶55-56. This trend drove smartphones and similar devices to develop miniaturized, network-connected monitoring devices that could communicate with wearable sensors, and led to the use of cloud-based transfer and storage for health and fitness data. EX1003 ¶¶55-56; EX1036, 9-10, 40-49; EX1040, 1-2; *id.* at 5; EX1034, 4.

The figure below shows such a "remote health monitoring system." EX1034, 2, 5; EX1003 ¶57.

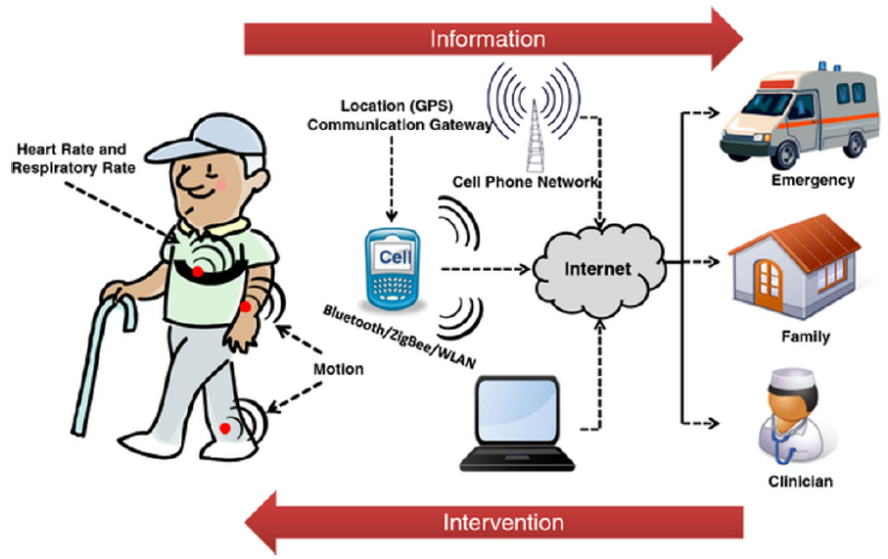

Figure 1 Illustration of a remote health monitoring system based on wearable sensors. Health related information is gathered via body-worn wireless sensors and transmitted to the caregiver via an information gateway such as a mobile phone. Caregivers can use this information to implement interventions as needed.

EX1034, 2.

A similar system is illustrated below:

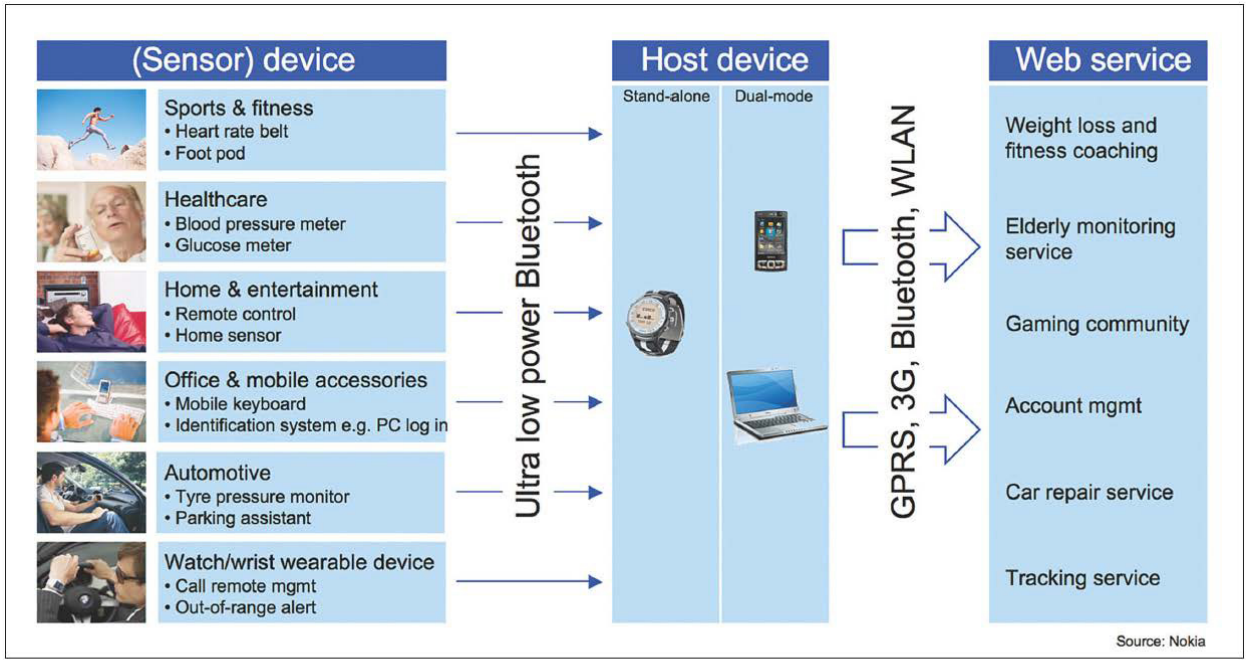

Figure 2. Bluetooth low energy will extend interoperable wireless connectivity to coin-cell-powered wireless sensors in health care, fitness, and related sectors. WLAN, wireless local area network; GPRS, general packet radio service.

EX1035, 459-60; EX1003 ¶59. Other publications from 2012 illustrate interconnected networks that use "cloud" based services to support health/fitness applications. EX1003 ¶¶60-61; *see* EX1037, 6-7, 12. The wireless, Internet-connected architecture for collecting, processing, and returning processed health data mirrors the analogous "wired" device architecture used for decades in optical systems. EX1003 ¶¶51, 59-62; *see* EX1033, 1363.

Thus, the market trends that resulted in these emerging "cloud"-based products for personal health, sports performance, and medical monitoring provided a strong motivation for a POSITA to integrate optical sensing techniques into small, portable, and wearable consumer devices that communicate wirelessly with personal devices and remote services. EX1003 ¶62. Indeed, the Board previously found—and Omni did not dispute—that "numerous industry trends," including "improving the capabilities of wearable sensors for use in sports and personal fitness applications and wirelessly connecting wearable sensors to networks to remotely monitor patient health" would have motivated a POSITA to modify or adapt prior art systems like those discussed below. EX1008, 23-24, *aff'd*, EX1009.

C. Alleged Invention of The '304 Patent

The '304 patent teaches an optical "measurement system" (*e.g.*, a wearable device) for measuring physiological parameters. EX1001, Abstract, 6:48-51. The system may include a "light source" with a plurality of semiconductors (*e.g.*, LEDs)

that emit an "optical output beam" of one or more wavelengths. EX1001, 5:41-50, Abstract. The optical output beam is directed to a sample as an analysis output beam, and then reflected/transmitted back where it is captured by a receiver. EX1001, 5:50-55, 8:25-50. The receiver processes the analysis output beam to generate an output "signal," which is then transmitted to a smartphone or tablet, which may store, display, transmit or further process the data from the signal. EX1001, 8:25-50.

D. Prosecution History of The '304 Patent

The '304 patent is part of a family of continuations that includes the '533 and '484 patents. It is subject to a terminal disclaimer to some of those patents. EX1001, 1-2; EX1002, 258-263. The '304 patent claims priority to December 31, 2012, provisional applications, but was prosecuted as an AIA patent, and Omni acknowledged that at least one claim of the '304 patent lacked the 2012 priority date and was subject to the AIA. EX1002, 89-90, 266-86; EX1024, 8.

The claims of the '304 patent were allowed during prosecution without incurring rejections or substantive discussion of the prior art from the Examiner. EX1002, 266-86. The Examiner simply proposed amendments to certain claims to specify that: (a) the light intensity is increased "relative to an initial light intensity" and (b) the generated output signal "represent[s] at least in part a non-invasive measurement on blood contained within the sample." EX1002, 272-83, 287. Omni agreed to the amendments, and the claims were allowed. *Id.*, 287.

VII. GROUNDS OF UNPATENTABILITY

A. Collateral Estoppel

The Challenged Claims are materially similar (or identical) to those found unpatentable by the Board in the prior '533 and '484 IPRs. EX1008, EX1011. These findings are identified below on a limitation-by-limitation basis for the claims to which they apply. Nearly all of these findings have been affirmed by the Federal Circuit—only the question of whether the prior art teaches the "identifying an object" limitation in the '484 patent (and in claims 9, 12, 26 here) remains a live limitation on appeal. EX1012, EX1013. Thus, for the limitations/claims below that overlap with those previously found unpatentable, Omni is collaterally estopped from challenging unpatentabilty. *Papst*, 924 F.3d at 1251; *Samsung Elecs. Co., Ltd. v. Netlist, Inc.*, IPR2025-00002, Paper 17, 17-24 (P.T.A.B. May 15, 2025).

First, the limitations in the Challenged Claims are "substantially similar" (in some cases, identical) to limitations the Board found unpatentable in the prior IPRs, relying on the same art (Lisogurski, Carlson, Tran, and Valencell-093). *Google LLC v. Hammond Dev. Int'l*, 54 F.4th 1377, 1381-82 (Fed. Cir. 2022) ("It is well established that patent claims need not be identical for collateral estoppel to apply."); *Ohio Willow Wood Co. v. Alps S., LLC*, 735 F.3d 1333, 1342 (Fed. Cir. 2013) (collateral estoppel applied to a related patent using "slightly different language to describe substantially the same invention"); *Soverain Software LLC v. Victoria's*

Secret Direct Brand Mgmt., LLC, 778 F.3d 1311, 1319 (Fed. Cir. 2015) ("Complete identity of claims is not required to satisfy the identity-of-issues requirement for claim preclusion.").

Second, these limitations were "actually litigated" by Omni. *Google*, 54 F.4th at 1381-82; EX1008, *aff'd* EX1009; EX1011, *aff'd in part rev'd in part*, EX1012; EX1013.

Third, these limitations were "essential" to the findings of unpatentability, and have become final as to all but one limitation, as they were either affirmed by the Federal Circuit or not cross-appealed by Omni. *United Therapeutics Corp. v. Liquidia Techs., Inc.*, 74 F.4th 1360, 1372 (Fed. Cir. 2023).

Fourth, Omni had a full and fair opportunity to litigate the patentability of these limitations. *Google*, 54 F.4th at 1381-82.

B. Ground 1: Claims 1, 11, 19-20, and 25 would have been obvious over Lisogurski in view of Carlson.

1. Overview of Ground 1

a) Lisogurski

Lisogurski describes a portable "physiological monitoring system" that uses a wearable optical sensor to measure "physiological parameters of a patient," including pulse rate and oxygen saturation (*e.g.*, a pulse oximetry system). EX1027, 3:44-46, 3:60-4:8; EX1003 ¶82. The system includes a sensor, monitor, and remote devices (*e.g.*, servers). EX1027, 11:28-32, 15:43-48. The sensor is a "light sensor"

that can be worn on various body parts, is battery powered, and can wirelessly communicate with the monitor. EX1027, 4:6-4:8, 4:15-20, 17:55-58. The sensor can include multiple light-emitting diodes (LEDs) of "one or more wavelengths" (*e.g.*, red and infrared (IR)) and photodetectors. EX1027, 4:42-48, 10:48-64, 11:9-13, 17:37-45.

The system regulates a light drive signal, referring to the electric current applied to the LEDs. EX1027, 11:38-41, 50-54, 12:3-9; EX1003 ¶86. As a higher current is applied to a particular LED, its emitted light intensity increases. EX1027, 7:13-31, 12:3-22; EX1003 ¶86. Lisogurski teaches that the LEDs can be modulated, EX1027, 4:48-54, 8:4-8, 8:27-35, 16:24-32, and that, depending on various conditions, the system can change the modulation parameters and the light drive cycle, EX1027, 1:60-61, 1:67-2:3. The drive cycle parameters that can be controlled include "light intensity, duty cycle, [and] light source firing rate." EX1027, 1:60-61, 1:67-2:3; *id.*, 1:10-25, 5:48-54, 25:46-65. Varying the drive cycle parameters can increase the signal-to-noise ratio (SNR) of the device when interference is encountered. EX1027, 5:55-6:6, 8:46-52, 27:44-49; EX1003 ¶86.

The modulated light is emitted by the LEDs in beams, passes into a person's tissue, and is transmitted through/reflected back, where it is detected by a photodetector on the sensor. EX1027, 4:7-11, 10:48-56, 11:13-20. The photodetector "convert[s] the intensity of the received light into an electrical signal."

EX1027, 11:14-16. The sensor can either send the signal directly to the monitor or it can pre-process the signal. EX1027, 11:20-27; EX1003 ¶¶85-86. The sensor can be connected to the monitor with or without a wire. EX1027, 17:54-59, Fig. 3; EX1003 ¶82. Either way, the device applies signal processing techniques to the detected signal to isolate the signal from the reflected light. EX1027, 7:16-21, 12:48-49, 13:7-14:55; EX1003 ¶¶85-86.

b) Carlson

Carlson discloses a pulse oximeter worn on the ear, finger, or elsewhere. EX1028, [0003], [0052], [0078]; EX1003 ¶88. The oximeter uses a conventional sensor that emits optical wavelengths in the red (*e.g.*, 660 nm) and infrared (*e.g.*, 800-1000 nm) ranges and detects light that has been transmitted or reflected. EX1028, [0003], [0050], [0052]-[0054]; EX1003 ¶88. The device is mobile and can wirelessly transmit data to, *e.g.*, a doctor or hospital. EX1028, [0072], [0077]-[0078].

Carlson seeks to "increase the technical performance of pulsoximetry in terms of quality and robustness of the measurement signal versus environmental disturbances and energy consumption." EX1028, [0002]. Carlson aims to improve existing sensors by "defin[ing] optical and/or electrical means for increasing the Signal-to-Noise ratio (S/N) … of a pulsoximeter sensor for robust application of

pulsoximetry … in rough (optical) environmental conditions, e.g., at changing light influences, such as sunlight, shadow, artificial light, etc." EX1028, [0010].

c) Motivation to Combine

The Board twice found (and the Federal Circuit twice affirmed) that a POSITA would have been motivated to combine Lisogurski and Carlson. EX1008, 22-25; EX1011, 22, 28, 36-43. In the '533 IPR, *Omni did not even dispute* there would have been a motivation to combine these references. EX1008, 22-25 (citing EX1018, 14-32), *aff'd.*, EX1009. And in the '484 IPR, Omni disputed only that there would have been a motivation to combine Carlson and Lisogurski for the limitations requiring increasing SNR by increasing the pulse rate, an argument that the Board found contradicted by Lisogurski, which Omni did not cross-appeal. EX1011, 28-43; EX1012, n.2. Thus, Omni is collaterally estopped from challenging motivation to combine these references. *Supra* §§VII.A.

To the extent the issue is reached, both Carlson and Lisogurski concern miniaturized wireless pulse oximetry devices (1) directed to the same applications (*e.g.*, mobile monitoring of a person's pulse and other physiological characteristics) (2) with similar objectives (improving the performance, utility, and power consumption of portable/wearable sensors), so a POSITA would have considered the two systems together and would have been motivated to combine them, including in view of industry trends discussed above. EX1003 ¶¶100-04; *supra* §§VI.B.2.

Specifically, Lisogurski teaches a PPG system designed to optimize power consumption and allow "for increased battery life" and "portability." EX1027, 1:4-6, 1:16-18, 3:50-53; EX1003 ¶101. Lisogurski's techniques reduce power requirements for oximeters, allowing for smaller devices (*e.g.*, a wearable sensor worn on the wrist) or longer life. EX1027, 4:15-20, 4:63-67 17:51-58. Lisogurski also teaches increasing SNR of measured signals while minimizing power consumption. EX1027, 9:46-52. These teachings would have motivated a POSITA to look for other techniques accomplishing the same objectives, particularly in the field of wearable sensors. EX1003 ¶101. Looking to complementary designs and techniques in analogous systems would have been part of a POSITA's ordinary design process to improve the operation of a PPG device. EX1003 ¶101.

A POSITA would have looked to Carlson, which describes improvements to pulse oximetry devices in signal measurement and energy consumption. EX1028, [0002]; EX1003 ¶102. Carlson teaches increasing SNR of an optical sensor, even where optical conditions of the environment are changing. EX1028, [0010]. Carlson's techniques are energy efficient and can be used in battery-powered devices worn by a user. EX1028, [0048], [0052]. Carlson discloses incorporating these techniques for improving SNR into devices used for health and fitness applications. EX1028, [0004].

Because Lisogurski and Carlson concern analogous systems that aim to solve the same problems, a POSITA would have had a reasonable expectation of success implementing Carlson's teachings into Lisogurski's system. EX1003 ¶103. For example, modifying Lisogurski's system to include Carlson's "beam shaping element" would have been a routine modification because using elements such as lenses to focus the light of LEDs is a "building block" of optical measurement systems. EX1003 ¶138. Implementing Carlson's wireless transmission/alert system into Lisogurski would have been a routine modification with a reasonable expectation of success because Lisogurski itself teaches the wireless transmission of physiological data. EX1003 ¶¶179-81. Both references teach interchangeable techniques of adjusting the operation of their light sources to increase SNR, such that a POSITA would have reasonable expectation of success implementing Carlson's modulation technique in Lisogurski's system. EX1003 ¶234.

2. Analysis of Ground 1

a) Claim 1[pre], 11[pre], 19[pre][4]:

The Board found (and Omni did not dispute) Lisogurski discloses a "measurement system" (1[pre], 11[pre]) and a "wearable measurement device" (19[pre]). EX1008, 25, *aff'd* EX1009.[5]

To the extent the preamble is limiting, Lisogurski teaches 1[pre]/11[pre]: a "measurement system." EX1027, 3:43-46, 3:61-4:5 ("a pulse oximeter … may non-invasively **measure** the oxygen saturation of a patient's blood"); *id.*, Abstract, 4:6-20, 4:52-62, 17:55-59, Figs. 1, 3; EX1003 ¶¶120, 191. Lisogurski teaches 19[pre]: a wearable device for use with a smartphone or tablet. EX1027, 4:6-8, 4:15-20, 15:19-27 15:49-56, 17:54-58; EX1003 ¶204; *infra* §VII.B.2.m.

b) Claim 1[a], 11[a]-[b], 19[a]-[b], 19[h] 19[j]:

The Board found (and Omni did not dispute) Lisogurski discloses a "light source including a plurality of LEDs," and "the light source configured to increase the signal-to-noise ratio by increasing a light intensity." EX1008, 25-26. It further

---

[4] The Petition addresses materially identical/overlapping claim limitations together; exact claim language is found in Appendix A.

[5] Henceforth, the Petition cites only the FWD in the '533 IPR, but the Federal Circuit summarily affirmed that decision in full. EX1009.

found (and Omni did not dispute) Lisogurski teaches "a light source comprising a plurality of semiconductor sources that are light emitting diodes, each of the light emitting diodes configured to generate an output optical light having one or more optical wavelengths." EX1011, 23, 26-27; EX1012, n.2.

Light Source/Semiconductor Sources (1[a], 11[a], 19[a]): Lisogurski discloses a wearable sensor with a light source comprising multiple LEDs, *i.e.*, "*semiconductor sources*." EX1027, 17:42-45 ("[S]ensor unit 312 may include **multiple light sources** and detectors."); 10:48-64 ("light source 130 may include **any number of light sources** with any suitable characteristics"); Fig. 1 (130); Fig. 3 (316); EX 1003 ¶¶123, 192, 206. The light source may include, *e.g.*, multiple IR and red LEDs. EX1027, 10:58-63, 17:37-45, 19:25-39.

Optical Beam + one or more wavelengths (1[a], 11[a], 19[b]): Lisogurski specifies each of the LEDs is configured to output an optical beam ("*[out]/[in]put optical beam*")[6] with different ("*one or more*") optical wavelengths. EX1027, 10:49-52 (the LEDs are "emit photonic signals having **one or more wavelengths of light** (e.g., Red and IR) into a subject's tissue"), 7:38-8:3; *see also id.* 4:42-45;

[6] Claims 1 and 11 use "output" optical beam, while claim 19 uses "input" optical beam, but these are the same beam, which is "output" by the LED and "input" to the encapsulant/sample. EX 1003 ¶208.

EX1003 ¶¶125, 192, 206. Lisogurski discloses that the LEDs create light that is "transmitted to a particular location in space"—the "subject's tissue"—such that the LEDs are configured to direct light in a "*beam*." EX1027, 10:49-52; EX1003 ¶125.

Increasing SNR by "increasing a light intensity relative to an initial light intensity" (1[a], 11[b], 19[h], 19[j]): Lisogurski teaches increasing SNR relative to "an initial light intensity." EX1003 ¶¶126-28, 193, 218, 220. Lisogurski teaches altering "drive parameters" of the LEDs in response to "the level of noise, ambient light, other suitable reasons" to mitigate the effect of noise, motion, or ambient light and thereby **increase the signal-to-noise ratio**. EX1027, 1:19-21, 9:46-52; *id.*, 5:56-6:6, 9:46-60, 14:49-55, 35:4-9. The "[p]arameters [of the LEDs] that may be varied include **light intensity**, firing rate, [and] duty cycle," where "light intensity" corresponds to brightness, frequency corresponds to "firing rate," and pulse width (*i.e.*, the duration of each pulse of light from the LED) corresponds to "duty cycle." EX1027, 1:19-21; EX1003 ¶126. Lisogurski teaches "the intensity of light source 130 and the timing of when light source 130 is turned on and off" is controlled by a light drive signal that "**increase[s] the brightness of the light sources in response to…noise to improve the signal-to-noise ratio**." EX1027, 9:50-52, 11:50-54; *id.*, 1:44-47, 11:38-41 (signal **modulation** techniques are controlled by control and light drive circuitry, which generate a light drive signal for activating and controlling the sensors of the light source(s)); EX1003 ¶126. To the extent the claims require

Lisogurski's **control circuitry 110 and light drive circuitry 120** to be part of **light source 130** (rather than monitor 104), a POSITA would have been motivated to move this **circuitry** from the monitor to the sensor unit as depicted below, as the Board previously found. EX1003 ¶128; EX1008, 22-23, EX1011, 24-25. This modification is consistent with Lisogurski's teaching that separate components in the system can be integrated into a single component (EX1027, 16:2-9), and would not affect Lisogurski's operation, because moving the circuitry would have been a routine modification consistent with existing sensors. EX1003 ¶128.

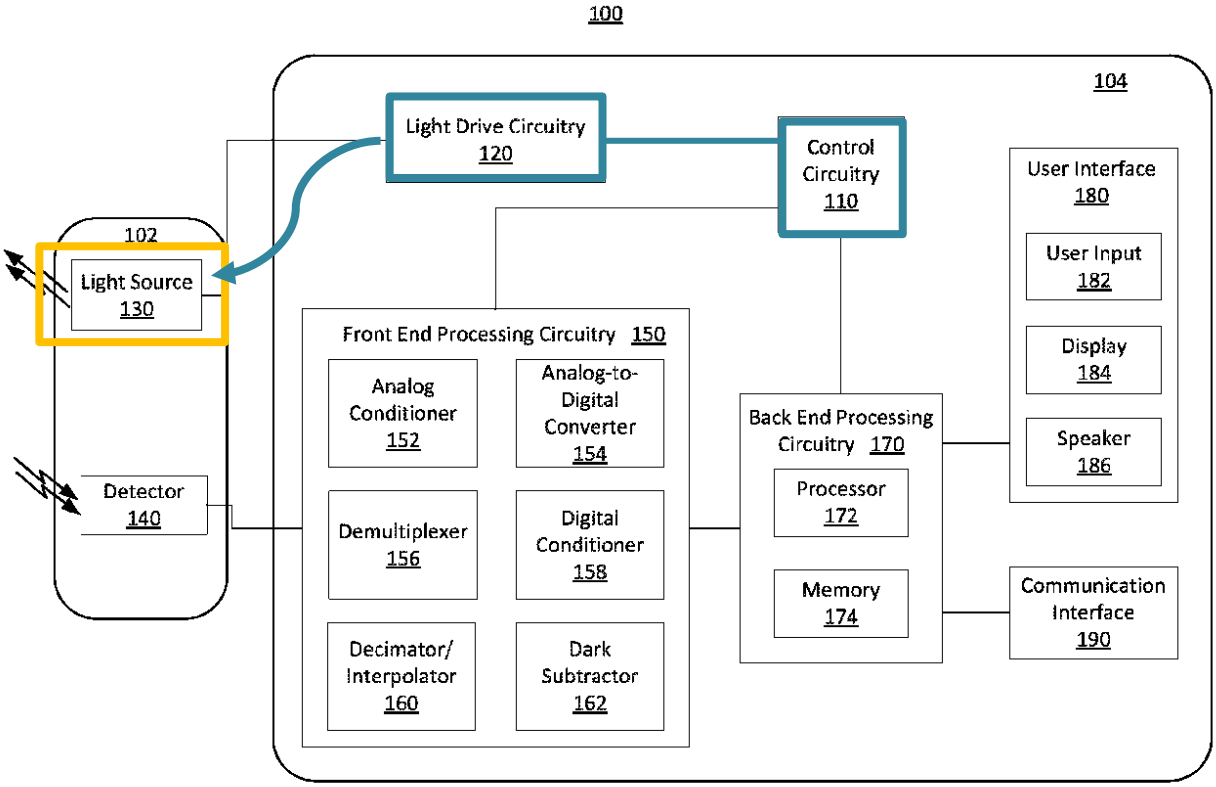

FIG. 1

EX1027, Fig. 1 (annotated); EX1003 ¶128.

<u>Modulation (19[b])</u>. Lisogurski discloses "*generating*" the in/output optical beam by "*modulating the semiconductor sources*." EX1003 ¶¶207-09; EX1027, 11:61-12:9 (LEDs operate in "continuous **modulation**" during "on" and "off" periods), 12:11-22 ("**light sources are driven in this manner** … **[to] emit pulses of light at their respective wavelengths into the tissue of a subject**," *i.e.*, in a "*beam*").

c) Claim 1[b], 11[a], 19[a]:

The Board found (and Omni did not dispute), Lisogurski teaches this limitation. EX1008, 25.

Lisogurski describes a measurement system (100/310), which includes a sensor (102/312) for measuring blood oxygen saturation, *i.e.*, physiological parameters. EX1027, 3:43-46, 3:61-4:3, 4:6-20, 17:54-59; *id.*, Abstract, 4:52-62, Figs. 1, 3. Lisogurski's sensor is a pulse oximeter that can be battery powered and wirelessly connected to a monitor or mounted on a user's fingertip, earlobe, or wrist. EX1027, 4:6-8, 4:15-20, 17:55-59; EX1003 ¶¶131-32, 192, 206.

d) Claim 1[c], 11[c], 19[c]:

The Board found (and Omni did not dispute), Lisogurski teaches this limitation. EX1008, 7, 35-37; *see also* EX1011, 23-24, 26-27 (Lisogurski teaches a "lens output beam").

Lisogurski discloses a system with conventional red and infrared LEDs configured to emit a beam of light, *i.e.*, an "[*in/out*]*put optical beam*." EX1027, 10:53-56, 7:38-8:3, 19:25-31; EX1003 ¶¶133-35, 194, 211. Lisogurski's measurement device (sensor 102/312) is configured to receive a portion of the output optical beam via, *e.g.*, an encapsulant, or via a lens system that captures and focuses the emitted beam. EX1003 ¶133. Specifically, a POSITA would have understood that a conventional LED (taught by Lisogurski) includes a light-emitting semiconductor that creates a light beam. *Id.* A POSITA would have understood that an LED semiconductor is conventionally encapsulated in glass or another medium that protects the LED and/or is shaped in such a way to function as a lens and focus the light emitted by the LED. *Id.* In either configuration (*i.e.*, regardless whether the encapsulant is functioning as a lens), the output beam emitted by the LED is "*receive[d]*" by the encapsulant. EX1003 ¶133.

e) Claim 1[d], 11[c], 19[c]:

The Board found (and Omni did not dispute), Lisogurski (alone or in view of Carlson) teaches this limitation. EX1008, 35-37; *see also* EX1011, 5, 23, 26-27.

Lisogurski teaches a measurement device that "*deliver[s] an analysis output beam to a sample*." An LED is conventionally surrounded by an encapsulant. EX1003 ¶¶133, 135, 194, 211; *supra* §§VII.B.2.d. A POSITA would have

understood a system with an encapsulant over the LED would receive the optical output beam and deliver it to the tissue as an "*analysis output beam*." EX1003 ¶135.

If Omni argues Lisogurski alone does not teach delivering an analysis output beam (separate from the output optical beam) to the tissue, Carlson renders this limitation obvious. EX1003 ¶136. Carlson identifies the benefits of using "at least one beam shaping optical element to direct the emitted light," *i.e.*, Carlson teaches an element that receives the optical output beam to create an analysis beam that is then delivered to a sample. EX1028, [0013], [0014] ("The basic idea… is to use a beam-shaping element, such as e.g.… lenses…, in order to increase the optical signal power…, thus increasing the Signal/Noise … ratio."); EX1003 ¶136. Carlson teaches that the "beam shaping element" can "**direct the emitted optical radiation** of, e.g., the LED light source **into the human or animal tissue**…." EX1028, [0013], [0014], [0024], [0062]. Figure 4 of Carlson shows **two beam-shaping elements 21** that receive light beams 8 emitted by **LEDs 15** ("*a portion of the in/output optical beam*") and deliver light bundles or beams 12 to sample 2 ("*deliver an analysis in/output beam to a sample*"). EX1028, [0054], [0062].

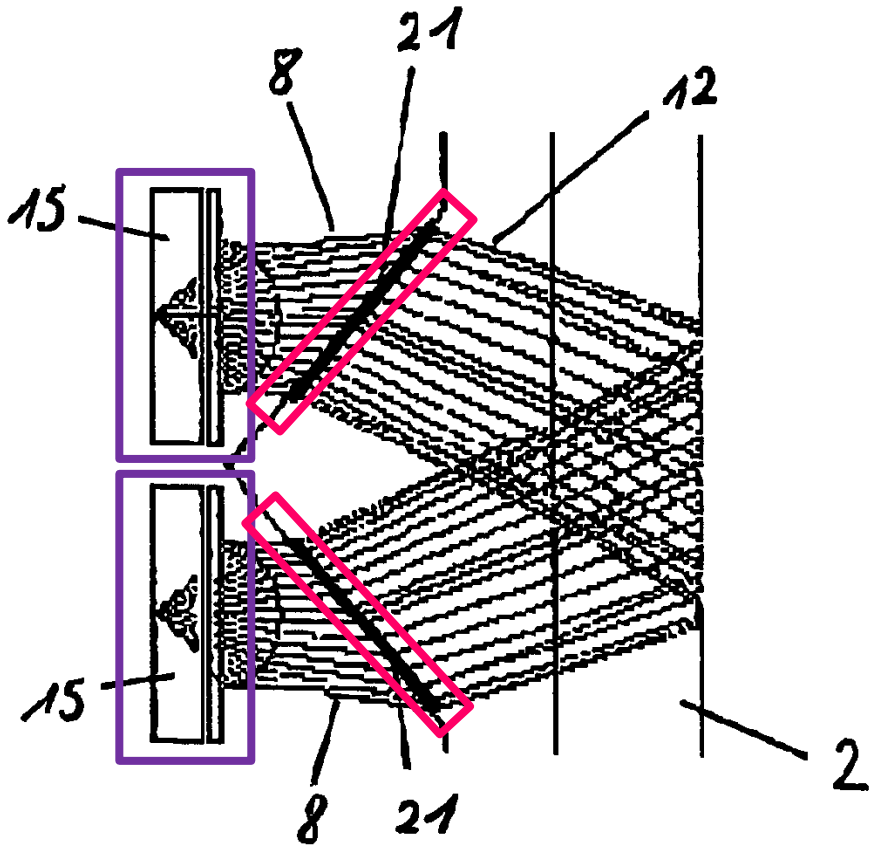

Figure 4

EX1028, Fig.4; *id.*, [0054]; EX1003 ¶¶136-37.

A POSITA would have found it obvious to include the "beam shaping element" in Carlson in Lisogurski's system for the reason Carlson identifies—to focus the emitted light from the LEDs onto the sample and deliver it as an analysis beam. EX1003 ¶138. Carlson teaches the beam shaping element improves efficiency and improved SNR. EX1003 ¶138. Lisogurski seeks to improve the power consumption efficiency of optical sensing devices, including by improving SNR. EX1027, 9:49-60, 13:60-14:10, 14:40-55, 37:6-20. A POSITA would have

recognized that adding the beam-shaping element from Carlson to Lisogurski would achieve the shared objectives of the two systems. EX1003 ¶138.

f) Claim 1[e], 11[d], 19[d]:

The Board found (and Omni did not dispute), Lisogurski teaches this limitation. EX1008, 37-39.

Lisogurski's sensor includes a **detector** (140/318) that **receives** "the light that is reflected by or has traveled through the subject's tissue," *i.e.*, the "*analysis output beam*." EX1027, 17:39-42; *id.*, 11:9-1, Fig. 1 (140), Fig. 3 (318). Lisogurski's detector(s) is connected to front end processing circuitry (together, "*a receiver*"), which "may receive a detection signal from detector 140 and provide one or more processed signals to back end processing circuitry 170." EX1027, 12:42-45. The receiver can perform particular functions. EX1003 ¶¶141-45, 195, 212.

To the extent Lisogurski does not expressly teach 1[e] because the **front end processing circuitry** is depicted in monitor 104 (separate from wearable sensor 102 that contains the detector), a POSITA would have considered it obvious to integrate the front end processing circuitry and **detector** in the same device, as depicted below.

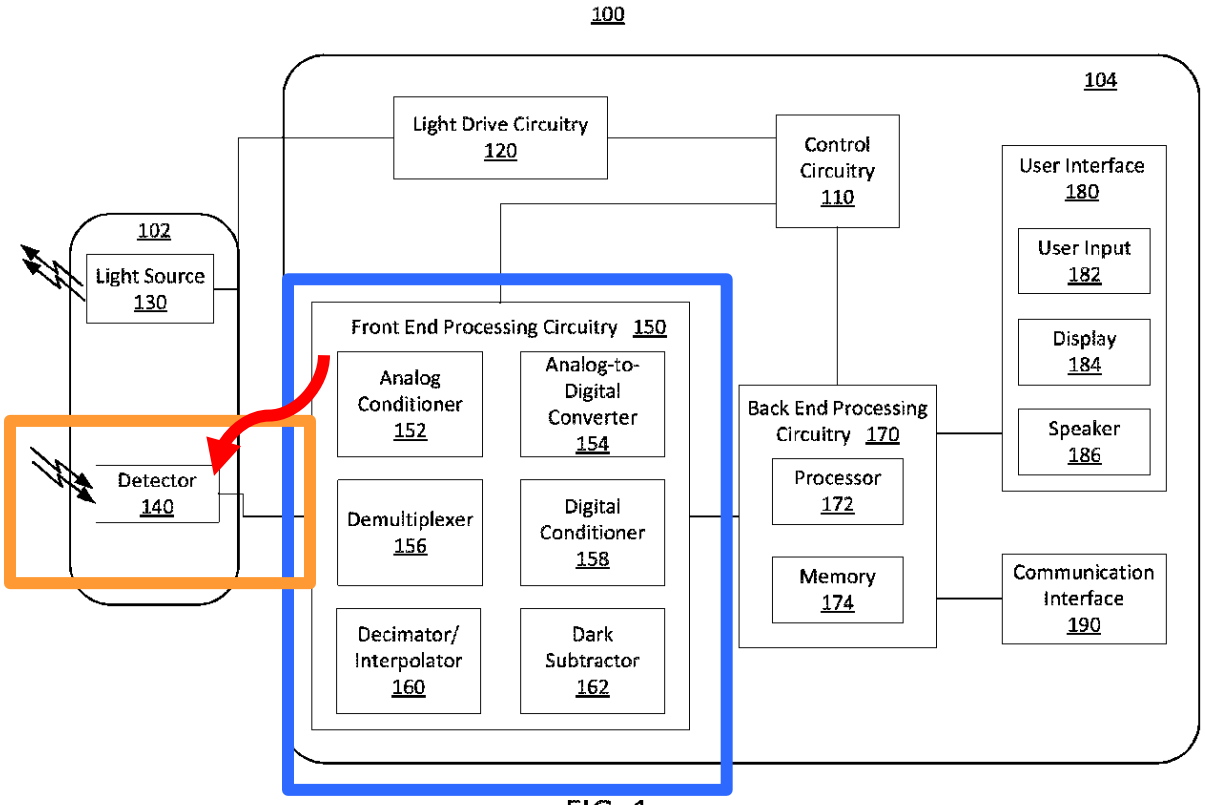

FIG. 1

EX1003 ¶¶142-43; EX1027, Fig.1; *see also* EX1008, 37-39.

Lisogurski teaches that sensor 102 (which includes detector 140) can "preprocess" the electrical signal it generates from the analysis output beam before transmitting the signal to the monitor. EX1027, 11:20-27. Lisogurski explains that the sensor may be a separate device that is "wirelessly connected" to the monitor. EX1027, 17:55-59, 18:16-31, 17:32-35.

Although not depicted by Lisogurski's figures, a POSITA would have considered it obvious to integrate the front end processing circuitry 150 in the monitor into the sensor 102 as depicted above based on the functional relationship between these elements. EX1003 ¶¶142-43. A POSITA would have understood the

signal received by the detector (analysis output signal) would preferably be converted to digital form for wireless transmission. EX1003 ¶¶142-43. It would have been an obvious variation for the POSITA to integrate the front end processing circuitry (which performs analog-to-digital conversion and other initial signal processing) into the sensor where the signal is captured ("received"). EX1003 ¶¶143-44. A POSITA would have understood that the additional necessary circuitry in the sensor would not affect the device's operation, because such circuitry is small and power efficient. EX1003 ¶144. A POSITA would have understood this variation to be consistent with Lisogurski's disclosure that "the functionality of some of the components may be combined in a single component… [or] divided over multiple components." EX1027, 16:2-9; EX1003 ¶¶144. A POSITA would also have been motivated to combine the front end processing circuitry with the wearable sensor component based on industry trends. EX1003 ¶144.

g) Claim 1[f], 11[e], 19[c]:

The Board found (and Omni did not dispute) Lisogurski discloses this limitation. EX1008, 37-39.

As discussed *supra* §§VII.B.2.f, Lisogurski includes a detector (140/318) with front end processing circuitry ("*receiver*") that receives an analysis output beam, *i.e.*, a light beam that is reflected by or has traveled through the subject's tissue. EX1027, 17:39-42; *id.*, 11:9-17; Fig. 1 (140); Fig. 3 (318). The receiver also "*process[es] at*

least a portion" of the analysis output beam by "converting the intensity of the received light," *i.e.*, the analysis output beam from the tissue, "into an electrical signal." EX1027, 11:14-25, Fig. 1 (102), Fig. 3 (312); EX1003 ¶¶147-49, 196, 211. Specifically, "after converting the received light to an electrical signal, detector 140 may send the detection signal to monitor 104" directly (EX1027, 11:20-22), or the sensor may further process the electrical signal before transmitting the detection signal to the monitor (EX1027, 11:14-27). EX1003 ¶¶147-49.

h) Claim 1[g], 11[f], 19[k]:

The Board found (and Omni did not dispute) Lisogurski discloses this limitation. EX1008, 37-39. The Board found (and Omni did not dispute) that Lisogurski's monitor receives the output signal, which can refer to physiological parameters from the detector obtained from a sample optically (*i.e.*, non-invasively). EX1008, 41; *see also* EX1011, 26-27; EX1012, n.2; EX1003 ¶153.

Lisogurski includes one or more detectors connected via front end processing circuitry, which may "receive a detection signal from detector 140 and provide one or more processed signals to back end processing signal 170." EX1-27, 12:42-45. Lisogurski's detector(s) receive the "light that is reflected by or has traveled through the subject's tissue," *i.e.*, light reflected by or transmitted through blood contained within the sample. EX1027, 17:39-42, 11:9-10, Fig. 1 (140), Fig. 3 (318); EX1003 ¶152. The detector (receiver) "convert[s] the intensity of the received light into an

electrical signal," thereby "*generat[ing] an output signal*." EX1027, 11:6-27, Fig. 1 (102), Fig. 3 (312); EX1003 ¶152, 194, 221.

i) Claim 1[h], 11[g]:

The Board found (and Omni did not dispute) Lisogurski, or Lisogurski in view of Carlson, teaches this limitation. EX1008, 37-39, 41; EX1011, 24-27; EX1012, n.2.

Lisogurski's detector(s) is connected to front end processing circuitry (together, "*a receiver configured to receive and process*"), which "may receive a detection signal from detector 140 and provide one or more processed signals to back end processing circuitry 170." EX1027, 12:42-45. The "processed signals" in Lisogurski correspond to the claimed "*output signal*." EX1003 ¶¶154-55. Lisogurski teaches that the front end processing circuitry is synchronized with the light drive circuitry that controls the modulation or pulses of the LEDs. EX1027, 11:33-49 ("front end processing circuitry 150 may… operate **synchronously** with light drive circuitry 120. For example, front end processing circuitry 150 may **synchronize** the operation of an analog-to-digital converter and a demultiplexer with the light drive signal based on the timing control signals."). It would have been obvious to add the control/light drive circuitry to Lisogurski's sensor unit with the front end processing circuitry. *Supra* §VII.B.2.b. Thus, the front end processing

circuitry and the detector ("receiver") in Lisogurski are "synchronized" to the light drive signal ("the light source"). EX1003 ¶¶154-55, 198.

j) Claim 1[i], 11[h], 19[e]:

The Board found (and Omni did not dispute) Lisogurski teaches materially identical limitations. EX1011, 43-44; EX1012, n.2.

Capture Light While Semiconductor Sources are "Off": Lisogurski teaches a "dark subtraction" technique to "remove ambient and background signals." EX1027, 6:7-19, 13:60-14:10, 16:33-54. Lisogurski teaches "the system [may] turn[] on a first light source, followed by a 'dark' period, followed by a second light source, followed by a 'dark' period." EX1027, 6:12-15. "The system may measure the ambient light detected by the detector during the 'dark' period…" (*i.e.*, "*capture light while the semiconductor sources are off*"). EX1027, 6:16-19; 13:67-14:6 (measuring a "dark signal" by "determining the amount of dark signal during [each] 'off' period 220."); EX1003 ¶¶157-59, 199, 213.

First Signal: Lisogurski teaches the front end processing circuitry uses the current measured when the semiconductor sources (LEDs) are off to generate a "dark signal" ("*first signal*"). EX1027, 13:35-41 ("Demultiplexer 156 may…generate… a **first dark signal**…, and a second dark signal…"), 12:52-13:6, 11:14-16 (detectors "convert[] the intensity of the received light into an electrical signal"); EX1003

¶¶157-59, 199, 213. The dark signal/current 222 is measured during dark period 220, depicted in Figures 2A and 2B of Lisogurski:

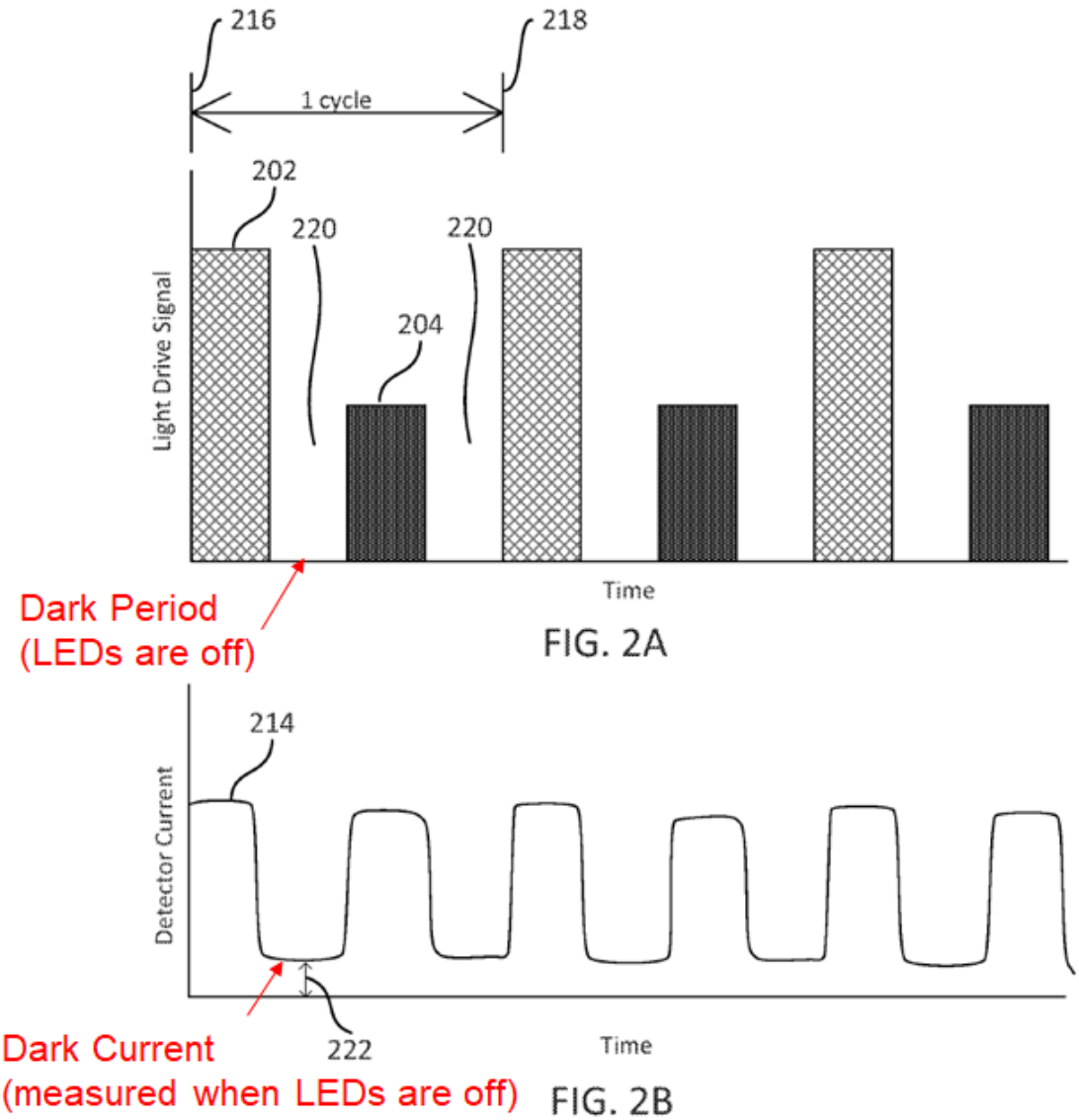

EX1021, 54-56; EX1003 ¶158; EX1027, Figs. 2A (current used to illuminate the LEDs), 2B (current output by detector), 12:64-13:6, 13:67-14:6.

k) Claim 1[j], 11[i], 19[f]:

The Board found (and Omni did not dispute) Lisogurski teaches materially identical limitations. EX1011, 43-44; EX1012, n.2.

Capture Light While Semiconductor Is "On": Lisogurski's dark subtraction process (*supra* §§VII.B.2.j.) teaches that its detector(s) and front-end processing circuitry are configured to receive (*i.e.*, "capture") light reflected/transmitted by a user's tissue (*at least a portion of the analysis output beam reflected or transmitted by the sample*) while at least one LED is turned on. EX1003 ¶161; *see also* EX1027, 17:40-42 (light received by the detectors includes "light that is reflected by or has traveled through the subject's tissue"); *id.*, 11:12-20. Lisogurski's system "may measure…the signals received during the first and second '**on**' periods" ("*while at least one of the semiconductor sources is on*"). EX1027, 6:12-19; EX1003 ¶161, 200, 214.

"Second Signal": Lisogurski's system will generate a "red" signal and an "IR" signal ("second signal") when the respective LED is "on." EX1027, 13:67-14:3, 16:52-53; *id.*, 13:35-41 ("Demultiplexer 156 may…generate a Red signal [and] an IR signal…"), 17:8-10. This system is depicted in Figures 2A and 2B:

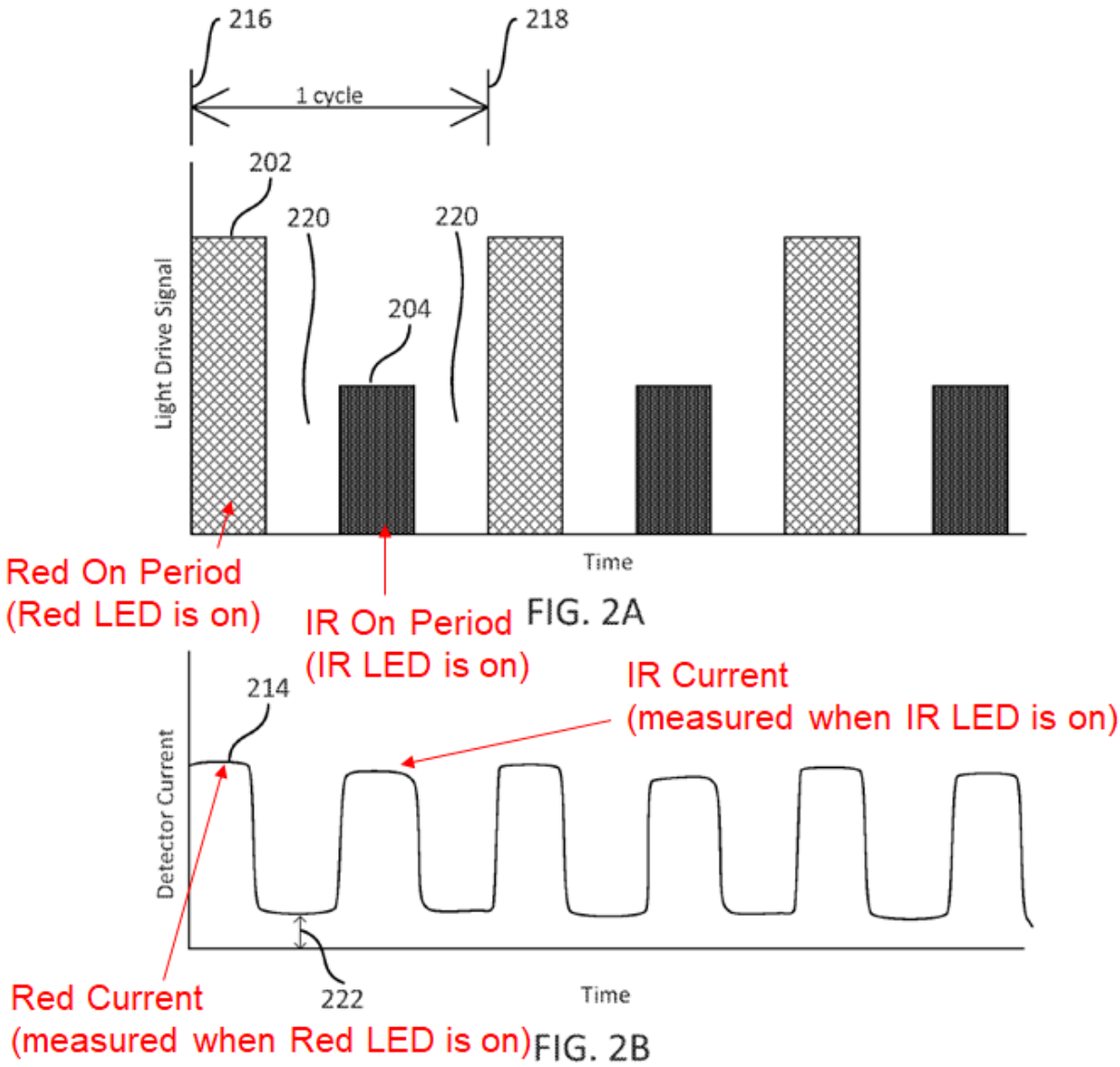

EX1021, 55; EX1003 ¶162; EX1027, Figs. 2A, 2B, 12:52-13:6.

l) Claim 1[k], 11[j], 19[h]-[i]:

The Board found (and Omni did not dispute) Lisogurski teaches this limitation. EX1011, 5-6, 43-44; EX1012, n.2.

Lisogurski teaches a "dark subtraction" technique. *Supra* §§VII.B.2.j. The dark subtraction removes noise ("ambient light") from an analog signal. EX1027,

6:7-19, 14:46-55; EX1003 ¶¶164-65. The dark subtractor subtracts the dark signal (captured while the semiconductor sources are off) from each of the red and IR signals (captured while the semiconductor sources are on) to generate "adjusted Red and IR signals." EX1027, 13:60-14:10, 16:51-54 ("The system may subtract the…dark level from the levels received during red [or IR] 'on' period[s]"). Thus, Lisogurski teaches subtracting ("*differencing*") the dark level (*first signal*) from the IR or red level (*second signal*), which a POSITA would understand increases SNR ("*improves the signal-to-noise ratio*"). EX1003 ¶165, 201, 218-19. This is because SNR is calculated by dividing signal power by noise power, and decreasing noise necessarily increases SNR. EX1003 ¶165.

m) Claim 1[l], 11[k], 19[l]-[m]:

The Board found (and Omni did not dispute) Lisogurski teaches or renders obvious this limitation. EX1008, 39-42; EX1011, 25-27; EX1012 n.2.

Wireless Receiver/ Wireless Transmitter/Display/Microphone/Speaker/ Buttons or Knobs/Microprocessor/Touch Screen: Lisogurski teaches a **monitor** with back end processing circuitry including a **processor** (*i.e.*, "*microprocessor*"). EX1027, Fig. 1 (172), 14:56-66.; EX1003 ¶167 The **processor** is coupled to the user interface, which may include "any type of user input device, such as … a **touch screen**, **buttons**, switches, a **microphone**, …., or any other suitable input device" and also includes a **display** and **speaker**. EX1027, 15:16-27, Fig. 1. The back-end

processing circuitry is connected to a communication interface that "may include one or more **receivers** [or] **transmitters**," each of which "may be configured to allow … **wireless communication**." EX1027, 15:49-56. Thus, Lisogurski teaches a **monitor** with "a **wireless receiver, a wireless transmitter**, a **display**, a **microphone[/voice input module]**, a **speaker**, **one or more buttons or knobs**, **a microprocessor**, and a **touchscreen**." EX1003 ¶¶167-68, 202, 222-23.

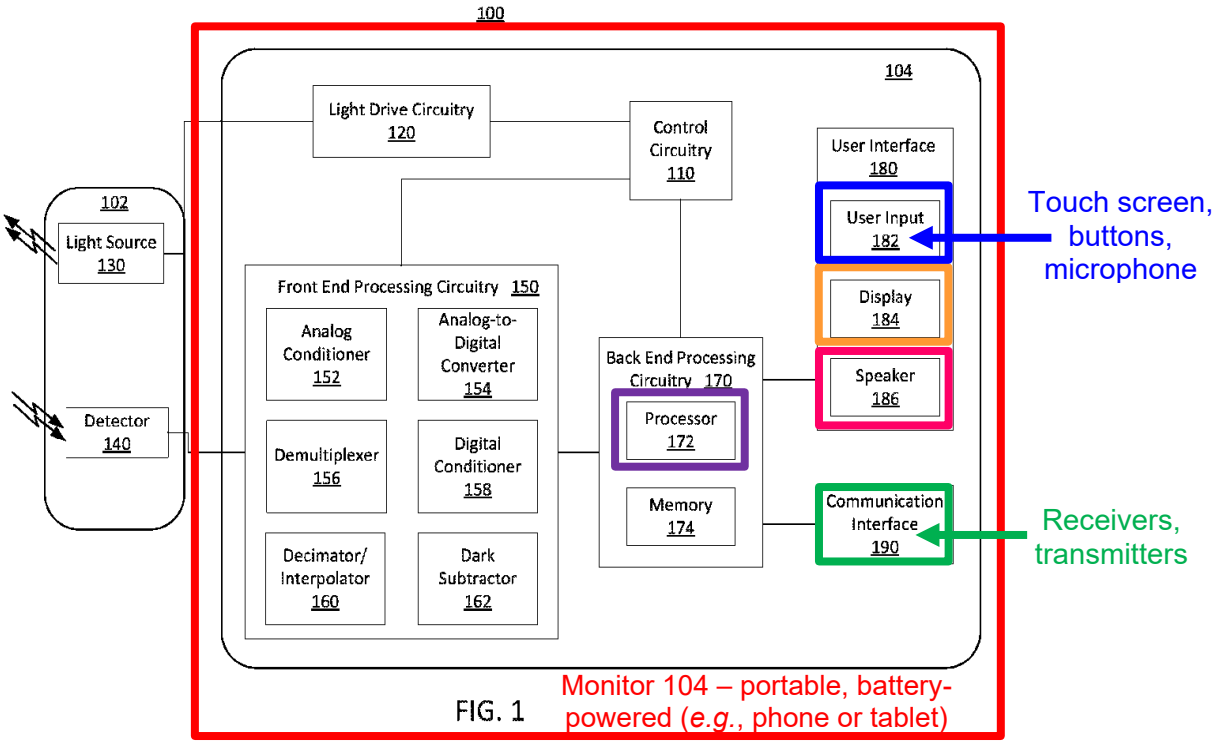

EX1003, ¶¶167-68; EX1027, Fig. 1.

Smartphone/Tablet: Lisogurski's **monitor** can be a portable, battery-power computing device with a touchscreen, which a POSITA would have recognized as referring to one of a limited number of computer options, including a tablet or smartphone. EX1027, 1:16-18 (portable), 15:20-23 (***touch screen***), 18:65-66

(battery powered); EX1003 ¶¶167-68, 202, 222-23; *Kennametal, Inc. v. Ingersoll Cutting Tool Co.*, 780 F. 3d 1376, 1381 (Fed. Cir. 2015) (reference need not "spell out" all limitations arranged as in the claim, if a POSITA would "at once envisage" the claimed arrangement). In 2012, tablets and smartphones were well-known in the art and there was growing demand for mobile sensor systems. *Supra* §VI.B.

n) Claim 1[m], 11[k], 19[n]

The Board found (and Omni did not dispute) Lisogurski teaches this limitation. EX1008, 41-42; EX1011, 25-26; EX1012, n.2.

Lisogurski's monitor can be a smartphone or tablet. *Supra* §§VII.B.2.m. The back end processing circuitry in the monitor includes a processor that receives and processes the output signal from the front end processing circuitry ("*configured to receive and process at least a portion of the output signal*"). EX1027, 14:56-64 ("processor 172 may determine one or more physiological parameters based on the **received** physiological signals."); EX1003 ¶¶170-71, 202, 224.

o) Claim 1[n], 11[k] 19[o]:

The Board found (and Omni did not dispute) Lisogurski teaches this limitation. EX1008, 40-42; EX1011, 5-6, 25-27; EX1012, n.2.

Lisogurski teaches the back end processing circuitry of monitor 104 (which may be a smartphone or tablet, *supra* §§VII.B.2.m) includes a processor that "may determine one or more physiological parameters based on the received physiological

signals" and a display that shows these physiological parameters (*i.e.*, "*display[s] the processed output signal*"). EX1027, 14:62-64, 15:30-35 (*e.g.*, SpO_2 measurement and pule rate information); EX1003 ¶¶172-73. Lisogurski also teaches that the back end processing circuitry includes a memory, *e.g.*, a RAM, ROM, flash memory, or hard drive (magnetic disk), which can store a history of the determined physiological parameters. EX1027, 14:64-15:16; 27:31-36, 30:42-48, 33:23-27, Fig. 1 (174). Thus, the processed output signal is both "store[d] and display[ed]" by the smartphone/tablet. EX1003 ¶¶172-73, 202, 225.

p) Claim 1[o], 11[k], 19[p]:

The Board found (and Omni did not dispute) Lisogurski teaches this limitation. EX1008, 39-42; EX1011, 25-27; EX1012 n.2.

Lisogurski teaches the processed output signal corresponding to a physiological parameter can be "transmit[ted]" wirelessly (via, *e.g.*, "WiFi, IR, WiMax, BLUETOOTH, UWB, or other standards" or by "publish[ing]" such data to a "server or website") from the smartphone or tablet to other remote devices, and such devices may include a multi-parameter physiological monitor. EX1027, 15:43-48, 15:53-57, 18:11-15, 18:49-53, 18:58-65, 20:55-60, 26:55-60; EX1003 ¶176, 202, 226.

q) Claim 1[p], 11[l], 25[a]:

The Board found (and Omni did not dispute) Lisogurski, or Lisogurski and Carlson, teach this limitation. EX1008, 42-43; EX1011, 26-27; EX1012, n.2.

Lisogurski teaches that determined physiological parameters can be wirelessly transmitted to "a server or website," or to another monitor, like multi-parameter physiological monitor 326 (MPPM 326), each of which is a "cloud" device. EX1027, 26:55-60 (server/website), 18:11-15, 18:58-62 (second monitor), 15:43-48, 15:55-57 (describing wireless transmission); EX1003 ¶¶178-79, 203, 236. MPPM 326 is a remote device wirelessly coupled to and that receives an output signal from monitor 104/314 (*e.g.*, the smartphone/tablet) and that can be "coupled to a network to enable the sharing of information with servers or other workstations," which shows it can be part of a cloud-based server. EX1027, 15:43-48, 18:49-67, Fig. 3; EX1003 ¶179.

Carlson similarly teaches transmitting health data to remote locations, including with a "special unit" worn by a user, which can generate an alarm if the measured value falls outside of a particular range. EX1028, [0078]. To the extent Lisogurski alone does not disclose a cloud, it would have been obvious to modify Lisogurski as suggested by Carlson to transmit data to a remote location/cloud. EX1003 ¶¶181-82.

r) Claim 1[q], 11[l], 25[a]:

The Board found (and Omni did not dispute) Lisogurski teaches this limitation. EX1011, 26-27; EX1012, n.2; EX1008, 42-43.

Lisogurski teaches a cloud (*e.g.*, MPPM 326) that receives, via wireless transmission link, an output status corresponding to the "determined physiological parameters" (output signal) from monitor 104/314. *Supra* §§VII.B.2.n-q.; EX1003 ¶¶183-84, 203, 236

s) Claim 1[r], 11[l], 25[b]:

The Board found (and Omni did not dispute) Lisogurski teaches this limitation. EX1008 42-44, 46-67; EX1011, 26-27; EX1012, n.2.

Lisogurski teaches that its MPPM 326 is a "cloud" that can "process" a received output status. *Supra* §§VII.B.2.n-q.

Lisogurski teaches that when data is transmitted to a server, website, or another monitor, that data (*i.e.*, the received output status) may be further processed or stored. EX1003 ¶186; EX1027, 26:55-60.

Lisogurski explains "**processing equipment remote to the system** may be used to determine physiological parameters." EX1027, 26:49-60. The remote device can be a "[m]ulti-parameter physiological monitor 326 [] configured to calculate physiological parameters and to provide a display 328 for information from monitor 314 and from other medical monitoring devices or systems." EX1027,

18:49-53. A POSITA would understand these disclosures to satisfy this limitation. EX1003 ¶¶185-87, 203, 237.

t) Claim 1[s], 11[l], 25[c]-[d]:

The Board previously found (and Omni did not dispute), Lisogurski teaches this limitation. EX1008, 42-43, 46-47; EX1011, 26-27; EX1012 n.2.

Store Data (1[s], 11[l], 25[c]): Lisogurski teaches the cloud, *e.g.* MPPM 326, can "publish" the processed data; in order to do so, the data must be "stored." EX1027, 26:51-60; EX1003 ¶¶188-89, 203, 238; *see also* EX1027, 15:43-48, 18:49-67, Fig. 3.

Store Over Specified Time (11[l], 25[d]): MPPM 326 can also store a history of the output status over a specified period of time, as it can perform statistical analysis on a history of physiological parameter measurements. EX1027, 20:8-13; EX1003 ¶189, 203, 239.

u) Claim 19[g]:

Lisogurski and Carlson teach a receiver configured to "synchronize to the light source." *Supra* §§VII.B.2.i. The Board also found (and Omni did not dispute) Lisogurski teaches a receiver "synchronized to the light source's pulses of light." EX1008, 37-39.

Similarly, Lisogurski may synchronize to the "modulation" of at least one of the LEDs (*"semiconductor sources"*). EX1027, 6:41-52 ("[T]he system may

modulate the light drive signal with a square wavefunction, such that it is at a low brightness level during a first part of the cardiac cycle and a high brightness level during a second part of the cardiac cycle."). Lisogurski teaches the sensor unit (which includes the "*receiver*") "align[s]" ("*synchronize*[*s*]") "the peak of the modulated light drive signal with a particular point in the cardiac signal to improve the quality of the determined physiological parameter, for example, it may be aligned with the diastolic period, the systolic period, the dicrotic notch, any other suitable point, or any combination thereof." EX1027, 6:41-52. A POSITA would have understood this means the LEDs ("*semiconductor sources*") and "*receiver*" are "aligned" according to the "peak of the modulated light drive signal" ("*synchronize[d] to the modulation*"). EX1003 ¶¶215-16.

v) Claim 20:

The Board found (and Omni did not cross-appeal) Lisogurski (or Lisogurski and Carlson) teaches "increas[ing] the signal-to-noise ratio … by increasing a pulse rate of at least one of the plurality of semiconductor sources from an initial pulse rate." EX1011, 28-43; EX1012, n.2; *see also* EX1008, 26-35 (similar). The addition of "non-zero" to claim 20 does not save it from unpatentability.[7] EX1003 ¶235.

[7] Following the '533 FWD, Omni amended the '304 patent claims(post-issuance) to add "from an initial *non-zero* pulse rate." EX1002, 436-43.

Lisogurski teaches dynamically adjusting the parameters of the light emitted by the LEDs to ensure adequate SNR. EX1027, 9:46-52, 37:6-22. These parameters include "firing rate." EX1027, 27:44-52, 2:1-3, 8:29-35, 25:46-55. A POSITA would have understood Lisogurski's "firing rate" is the same as the claimed "pulse rate." EX1003 ¶228. Lisogurski also teaches a first modulation mode that changes to a second modulation mode with different light drive parameters (like firing/pulse rate) when the system "detect[s] a change in background noise [or]...ambient light." EX1027, 37:6-20. A POSITA would have understood from Lisogurski that its light source must have an initial firing rate ("*initial…pulse rate*") that the system can later change, and that this initial firing rate is not limited to a system with zero as the starting pulse rate. EX1003 ¶229; EX1027, 1:67-2:3, 27:44-55, 27:39-43, 29:25-37, 24:49-55, 35:10-49.

Lisogurski describes embodiments where the firing rate of an LED is correlated to the sampling rate of an analog-to-digital converter in the detector and teaches that the sampling rate can be increased/decreased. EX1027, 33:47-49, 11:43-46; 11:52-55, 35:27-31 ("decreasing the duration of the 'off' periods (i.e., *increasing the emitter firing rate relates to an increased sampling rate*")). A POSITA would have understood an increased sampling rate results in more samples, which improves SNR because noise is averaged across more samples. EX1003 ¶230; EX1027, 33:36-58, 9:46-52, 35:7-9. Lisogurski teaches "cardiac cycle

modulation," a technique that improves SNR in the same way as the coordination of the sampling rate and the firing rate (as the Board found). EX1008, 28, EX1011, 28-43; EX1027, 25:46-65; EX1003 ¶231.[8] Thus, a POSITA would have understood Lisogurski teaches increasing the firing rate of the LEDs to improve SNR, regardless of whether the starting firing rate is zero ("off") or simply a low, non-zero rate. EX1003 ¶¶228-31; EX1027, 1:67-2:3, 27:44-55, 27:39-43, 29:25-37, 24:49-55, 35:10-49.

To the extent Lisogurski alone does not teach claim 20, Carlson renders it obvious. Carlson teaches improving SNR by reducing noise from ambient light. *Supra* §§VII.B.1.b. Carlson teaches ambient light, like sunlight, may have a frequency of 0-120 Hz. EX1028, [0067]-[0069]. Carlson teaches selecting a pulse frequency ("*pulse rate*") for the LEDs "in such a way that it is outside the frequency spectrum of sunlight and ambient light," *i.e.*, greater than 120 Hz ("*initial non-zero pulse rate*"). EX1028, [0069]; EX1003 ¶¶232-33. Carlson suggests the pulse frequency can be "1000 Hz" or "any other frequency, as e.g. 2000 Hz or even

[8] Omni's expert in the '533 IPR agreed "[g]enerally speaking, the faster the modulation, the faster the pulse rate, the lower the background noise." EX1021, 50 (quoting EX1041, 37:13-38:3). This statement was not limited to increasing the pulse rate from zero.

higher." EX1028, [0069]. Carlson describes "shifting the [pulse] frequency of the emitted light" during operation of the device so it is "substantially outside of frequency of noise and/or environmental signals." EX1028, claims 10-11, [0067]-[0069]. A POSITA would have understood Carlson teaches increasing pulse rate from an initial, non-zero pulse rate to improve "significantly the Signal-to-Noise and Signal-to-Background ratio." EX1028, [0069]; EX1003 ¶¶232-33.

Lisogurski and Carlson identify the same problem (noise from ambient light) and the need to offset the noise to improve SNR. EX1003 ¶234; EX1027, 9:46-60; EX1028, [0067]-[0069]. Modifying Lisogurski's system in the manner suggested by Carlson would have required routine effort; Lisogurski alone teaches increasing the firing rate of the LEDs can help improve SNR in response to changes in environmental conditions. EX1027, 1:67-2:3, 5:55-61, 9:46-60, 37:6-20.

C. Ground 2: Claim 3 would have been obvious over Lisogurski in view of Carlson and Debreczeny.

1. Overview of Ground 2

a) Debreczeny

Debreczeny describes a "pulse oximeter system[]" with three light sources, preferably LEDs, each emitting a different wavelength. EX1029, 2:51-63; 4:13-19. The "first and third" light sources are "symmetrically disposed spatially" relative to a photodetector, which receives light reflected/transmitted by the tissue. EX1029, 2:64-3:6; EX1003 ¶90.

Debreczeny teaches traditional pulse oximetry systems include one LED emitting "red" wavelengths and one LED emitting "infrared" wavelengths; these LEDs are "optically coupled, to a tissue location being probed." EX1029, 1:63-2:1. "[O]ptical coupling refers to a relationship between the sensor and the patient, permitting the sensor to transmit light into the patient's blood profused tissue and permitting a portion of the light to return to the sensor after passing through or reflecting from within the tissue." EX1029, 2:1-8. Debreczeny teaches the "quality of optical coupling" is "related to the amount of light that actually enters the patient's tissue" and the portion of light received by the sensor. EX1029, 2:7-10. Pulse oximetry systems are "sensitive to movement," and "motion induced changes" can distort the "accuracy of the sensor" by decreasing the amount of optical coupling (*i.e.*, light received by and transmitted from the patent's tissue). *Id.*, 1:63-2:18; 4:53-62; EX1003 ¶91.

Debreczeny describes a pulse oximetry system that counteracts the effect of motion on optical coupling and "provid[es] better readings" by including two red LEDs, rather than one, and using "[s]patial symmetry" to separate the two red LEDs; "[b]ecause the signal from the two LEDs 64 and 66 [(the red LEDs)] is additive, the signal-to-noise ratio may be increased." *Id.*, 5:6-67; EX1003 ¶92.

b) Motivation to combine

A POSITA would have considered Lisogurski and Carlson together with Debreczeny; they are analogous pulse oximetry/medical monitoring systems that describe techniques for improving SNR. EX1003 ¶105.

Lisogurski teaches increasing SNR of measured signals while minimizing power consumption, and these teachings would have motivated a POSITA to look to techniques used by other systems achieving the same objective. EX1003 ¶106; *supra* §§VII.B.1.

Thus, a POSITA would have looked to Debreczeny, which describes increasing SNR in optical imaging of deep tissue by "physically dispos[ing] in a symmetrical relationship" two red LEDs that "when summed together achieve a maximum intensity" "greater" than the intensity of either LED acting alone. EX1029, 5:32-67; EX1003 ¶106. Incorporating the spatial arrangement of LEDs from Debreczeny into Lisogurski, as modified by Carlson, would have been a straightforward modification with predictable results (increasing SNR), within the POSITA's knowledge and skill, and a POSITA would have had a reasonable expectation of success with this combination. EX1003 ¶243. Lisogurski invites "any suitable configuration" for its LEDs, including a sensor with "multiple light sources" that "may be spaced apart." EX1027, 17:42-45; EX1003 ¶243.

2. Analysis of Ground 2

a) Claim 3:

Debreczeny teaches a pulse oximetry system with "LEDs 64, 65, and 66." EX1029, 5:6-67. As illustrated by Figure 2, two LEDs emitting red light are positioned using "**[s]patial** symmetry" about a center LED emitting infrared light. *Id.*, 5:6-25, Fig. 2; EX1003 ¶241.

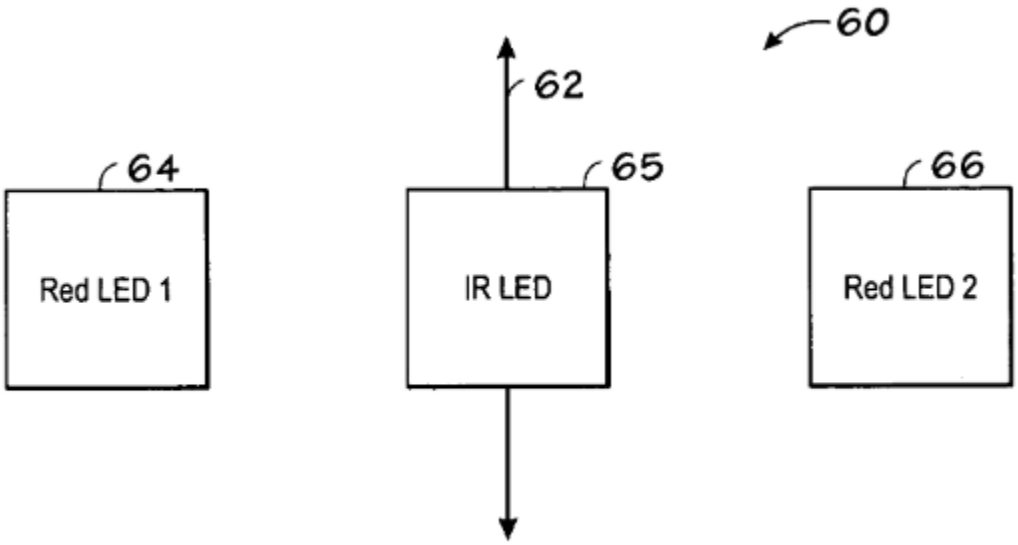

FIG. 2

Using two red LEDs "helps ensure that any coupling issues that may occur due to the movement of tissue relative to one LED may be compensated for by the other LED." EX1029, 5:16-25. The two red LEDs are selected to have "maxima at wavelengths that overlap at their half power level or greater," such that "when summed together they achieve a maximum intensity." "greater than that of either LED 64 or 66 alone." EX1029, 5:36-67, 6:1-29. "Because the signal from the two

[red] LEDs is additive, the signal-to-noise ratio of the sensor may be increased." EX1029, 5:26-35; EX1003 ¶242

A POSITA would have understood the "spectral symmetry" described by Debreczeny for the two red LEDs indicates the system is "configured to increase the light intensity" delivered to the tissue by "spatially coupling" two or more semiconductor sources, and thus teaches claim 3. EX1003 ¶242.

A POSITA would have been motivated to incorporate Debreczeny's LEDs into Lisogurski's system to increase the intensity of the signal delivered to tissue and correspondingly received by the detector(s) (increasing SNR). EX1003 ¶243. Including multiple red LEDs in Lisogurski's system and spacing them out symmetrically to provide optimal optical coupling would have been a straightforward modification with predictable results that a POSITA would have made in the ordinary design process. EX1003 ¶243.

D. Ground 3: Claims 2, 14, and 27 would have been obvious over Lisogurski in view of Carlson and Valencell-093.

1. Overview of Ground 3

a) Valencell-093

Valencell-093 discloses an optical sensor that can measure heart rate and blood constituents (*e.g.*, blood oxygen level). EX1032, [0006], [0050], [0090], [0109]. Its objective is "to make a wearable monitor…that may provide accurate information on physiological conditions in the midst of environmental noise."

EX1032, [0112]. Valencell-093 teaches incorporating the optical sensor into, *e.g.*, a wristband or headband. EX1032, [0050], [0150], Fig. 23. The sensor can be surrounded by a light-guiding region that "helps direct light to and/or from the sensor module [] and a blood flow region within the body part." EX1032, [0152]. The light-guiding region can include a "reflector, such as a metal, metallic alloy …, [or] reflective plastic." EX1032, [0152]; EX1003 ¶¶93-94.

b) Motivation to combine

In the '484 IPR, the Board found a motivation to combine Valencell-093 with Lisogurski's system; Omni did not cross-appeal that finding and is collaterally estopped from doing so now. EX1011, 58-60; EX1012, n.2; *supra* §§VII.A.

A POSITA would have considered Lisogurski, Carlson, and Valencell-093 together; they are analogous systems (miniaturized, wearable, wireless pulse oximeters) with common applications and utility—they describe techniques for improving power consumption of wearable optical sensing devices while improving performance. EX1003 ¶¶107-09. Lisogurski describes a PPG system designed to optimize power consumption and increase battery life of wearable sensors, while increasing SNR. *Supra* §§VII.B.1. These teachings would have motivated a POSITA to look for techniques used by other systems achieving the same objectives. EX1003 ¶107.

A POSITA would have looked to Valencell-093, which describes, *e.g.*, configuring a wearable optical sensor to maximize optical coupling and minimize relative motion between the device and the user's skin. EX1003 ¶109. These techniques include using light-guiding elements to allow the sensors to be positioned in a manner that focuses on the user's blood flow and reduces detection of environmental noise. EX1032, [0153]; EX1003 ¶109. Implementing the techniques from Valencell-093 into Lisogurski's system in view of Carlson would have been within a POSITA's knowledge as a straightforward and routine modification, and a POSITA would have had a reasonable expectation of success in such a combination. EX1003 ¶109. Specifically, a POSITA would have been familiar with the materials and coatings described by Valencell-093 (because the use of reflective materials to focus light output was well-known), and would have been able to integrate these materials into Lisogurski's wearable sensor unit with routine effort and expected results. EX1003 ¶251.

2. Analysis of Ground 3

a) Claims 2, 14, 27:

The Board found (and Omni did not dispute) Valencell-093 teaches "a reflective surface positioned to reflect at least a portion of … light reflected from the tissue," *i.e.*, the analysis output beam. EX1011, 59-60; EX1012, n.2.

Semiconductor sources comprise LEDs (2, 14): Lisogurski teaches the semiconductor sources may be LEDs. *Supra* §§VII.B.2.b.; EX1003 ¶¶247, 253; Ex 1027, 7:38-67.

Reflective surface to receive/redirect analysis output beam (2, 14, 27): Valencell-093 teaches its sensor can be surrounded by a light guiding region to "help[] **direct light to and/or from** the sensor module [] and **a blood flow region within the body part**." EX1032, [0152]. This region can include a "**reflector**, such as a metal, metallic alloy…, [or] reflective plastic." EX1032, [0152]. Thus, Valencell-093 teaches using "reflective surfaces" to receive at least a portion of light that has been reflected/transmitted from tissue. EX1003 ¶¶248-49, 253, 254. Examples are shown below:

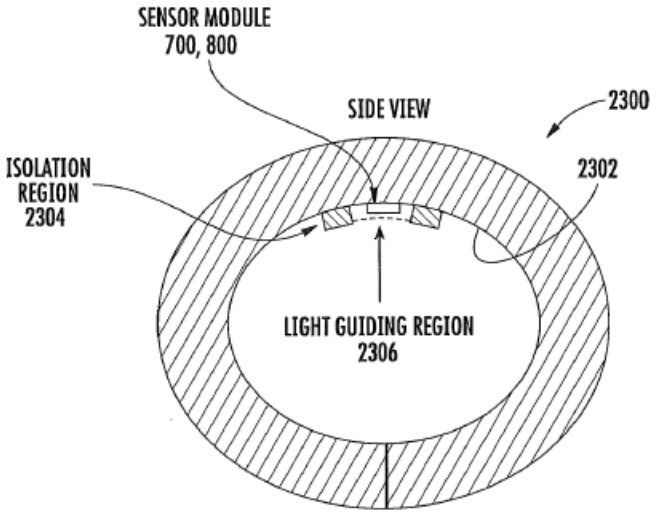

FIG. 24

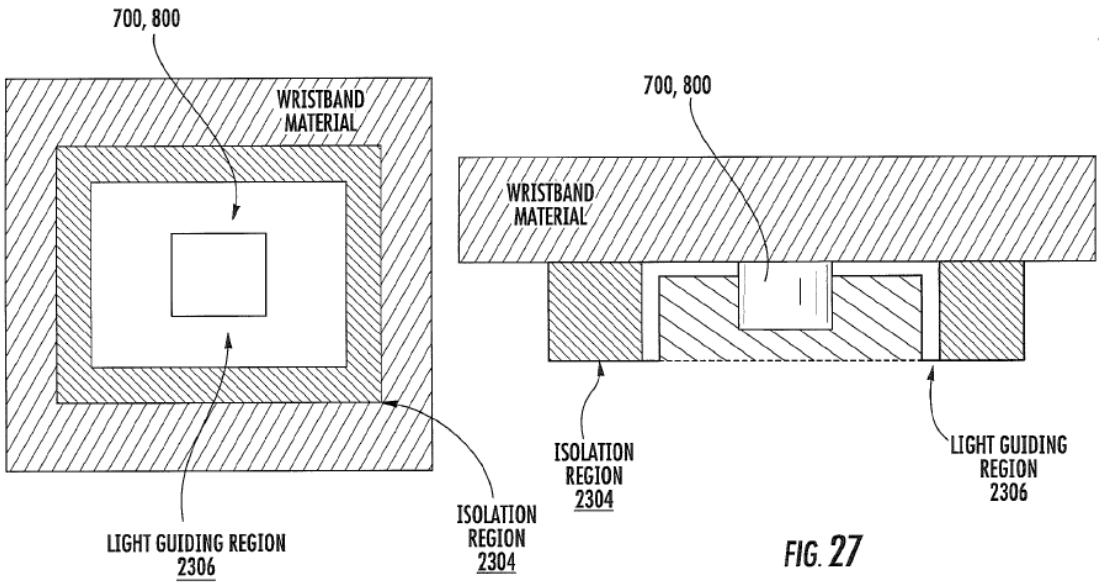

EX1032, Figs. 24, 26-27.

The light-guiding region in Valencell-093 assists in coupling the sensor to the body part (*e.g.*, wrist) and in reducing interference from environmental noise. EX1032, [0153]. Using a reflective surface helps increase SNR. EX1032, [0153]. This guidance would have motivated a POSITA to implement the reflective surface in Valencell-093 in the combined system of Lisogurski and Carlson. EX1003 ¶250. A POSITA would also have recognized that adding a reflective surface to Lisogurski would improve signal measurement efficiency and complement operation of Lisogurski's system. EX1003 ¶¶250-51; *see* EX1027, 1:10-11.

A POSITA would have been familiar with the materials and/or coatings described by Valencell-093 (EX1032, [0152]) that reflect light and would have been able to integrate them into Lisogurski's device with routine effort. EX1003 ¶251. A

POSITA would have considered the addition of a reflective surface to Lisogurski's sensor to be a straightforward and routine modification with a reasonable expectation of success. EX1003 ¶251.

E. Ground 4: Claims 4-8, 10, 15-18, and 21-24 would have been obvious over Lisogurski in view of Carlson and Soller.

1. Overview of Ground 4

a) Soller

Soller describes a measurement system for non-invasively monitoring the volume of red blood cells (hematocrit) using optical sensors that measure the components of those cells, including oxygenated and deoxygenated hemoglobin, methemoglobin, carboxyhemoglobin, and sulfhemoglobin. EX1030, 1:19-44, 5:33-37, Abstract. Soller teaches a measuring device with an "illumination component" that emits beams of light of multiple wavelengths in the "visible and near-infrared spectral region[s]" to measure the optical properties of the sample. EX1030, 11:44-12:2, 13:13-28, 18:18-23. The device may have between 5 and 20 LEDs, each emitting a different wavelength. EX1030, 13:13-28, 13:39-40. The LEDs are "evenly spaced and arranged in a circular pattern" and "preferably tilted inward," which Soller teaches "increase[es] the accuracy of the measurement." EX1030, 13:35-49; 16:39-48 (a "ring-like pattern" for the LEDs "maximize[s] the amount of radiation" directed to the sample). The light is delivered to the skin with a probe "in close proximity to the skin," such as via a "hand-held unit." EX1030, 12:30-38. The

device also includes interior and exterior detectors for capturing the light received from the tissue. EX1030, 13:50-63. Soller teaches that "[b]ecause of its small size," the device is "portable, handheld, and easily manipulated," which allows the measurement of hematocrit in "remote locations." EX1030, 15:50-56, 15:31-40; EX1003 ¶¶95-96.

b) Motivation to Combine

A POSITA would have considered Lisogurski, Carlson, and Soller together; they are analogous optical measurement systems with common applications and utility. EX1003 ¶111. All three describe techniques for improving the performance of wearable, optical devices used to remotely monitor physiological parameters, including blood oxygen. EX1003 ¶111. Lisogurski teaches increasing SNR while minimizing power consumption. *Supra* §§VII.B.1. These teachings would have motivated a POSITA to look to techniques used by other systems achieving the same objectives—part of the POSITA's natural design process. EX1003 ¶¶112-13. Thus, a POSITA would have looked to Soller, which describes configuring an optical sensor to maximize the accuracy of a physiological measurement by, *e.g.*, configuring the LEDs in a ring. EX1003 ¶¶112-13. A POSITA would have found the application of Carlson and Soller's teachings to Lisogurski's optical system a routine modification for which a POSITA would have had a reasonable expectation of success. EX1003 ¶113. For example, applying Soller's modifications to the

arrangement and number of LEDs and detectors in Lisogurski's sensor, *e.g.*, in arcs, would have been straightforward design modifications within the skill of a POSITA yielding predictable results. EX1003 ¶264.

2. Analysis of Ground 4

a) Claim 4-6, 15-16, 21, 22:

A POSITA would have understood the disclosures below teach or render obvious a "first arc" (comprising the plurality of detectors) and a "second arc" (comprising the plurality of semiconductor sources). EX1003 ¶¶256-272, 280-81, 284-84.[9]

Detector Arc (4-5, 15, 21): Soller discloses "interior detectors 105 and exterior detectors 110" ("*plurality of detectors*"). EX1030, 13:50-63. The light from the semiconductor sources is transmitted to the sample, and the "return reflected light" from the tissue is "received by an array of, e.g., twenty-five single fibers" (coupled to detectors), which are "**configured in a ring 781** concentric about fiber bundle 750." EX1030, 18:36-46; *see also id.*, 16:6-39 (radiation reflected by the tissue is collected by "signal fibers" attached to the detectors "disposed around the

[9] The '304 patent does not define "arc," nor is "arc" used in the specification. To the extent Omni offers a construction for "arc" to argue Soller does not teach arcs, WHOOP reserves the right to respond.

delivery fiber [*i.e.*, semiconductor source fiber] in a **radial, symmetrical pattern** to maximize the coupling efficiency of, respectively, the incident and reflective radiation"); EX1003 ¶¶256-57, 266-68, 280, 284.

Semiconductor Arc (4-5, 15, 21): Soller's measurement device includes **LEDs** ("*semiconductor sources*") that are "evenly spaced and arranged in a **circular pattern**" [('*second arc*')]. EX1030, 13:47-49; *id.*, 16:39-48 (describing LEDs in a "**symmetric, ring-like pattern** around the center of the lens"), 17:36-41 (describing a "**circular array**" **of LEDs**); Fig. 9; EX1003 ¶¶258, 266-68, 280, 284.

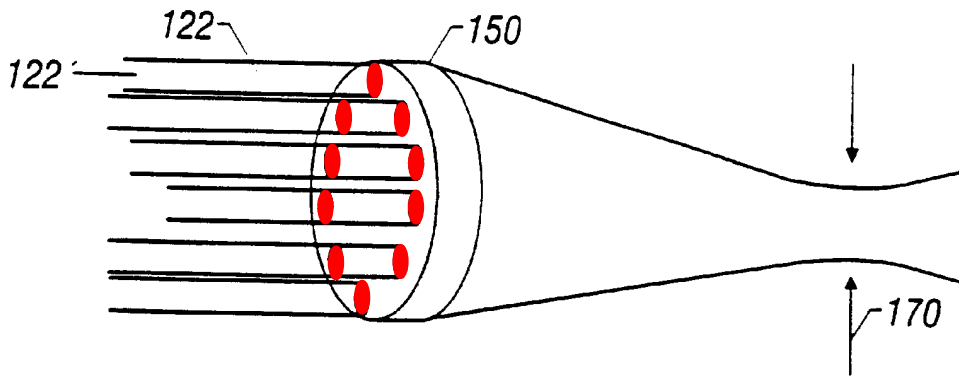

Figure 9

First and Second Arcs (4-5, 15, 21): Soller depicts (or, at a minimum, renders obvious) the LEDs and detectors in two separate arcs:

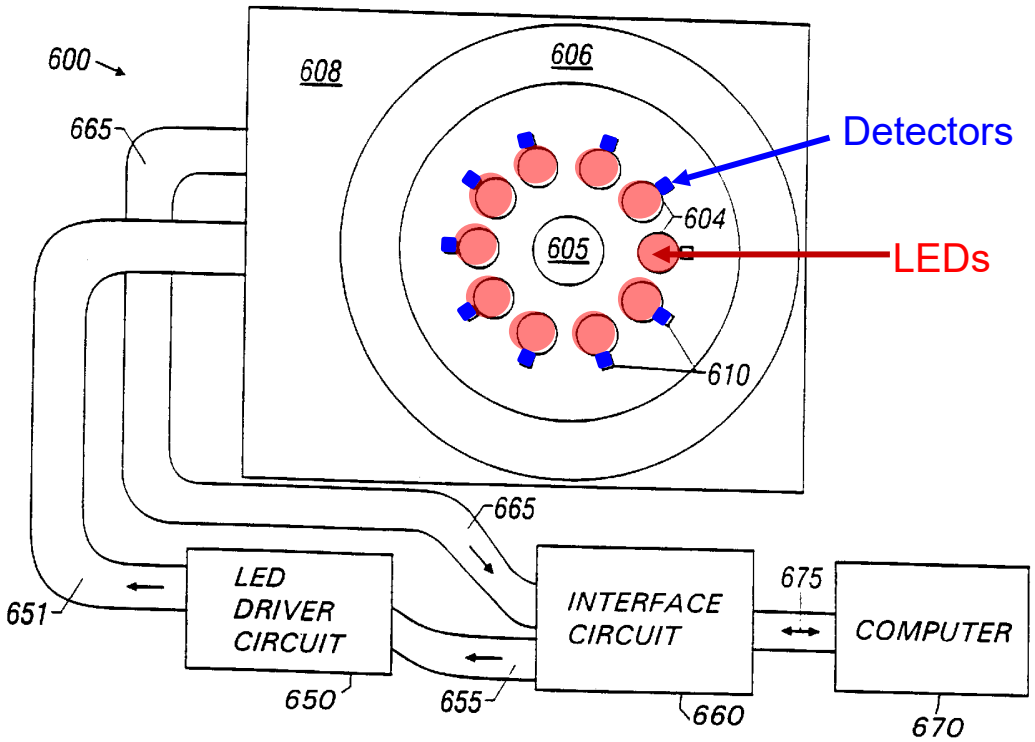

Figure 11A

EX1030, Fig. 11A (annotated), 17:36-60; EX1003 ¶¶256, 258-59.

The detectors **604** above are **reference detectors** "to measure and correct for variations in the LED intensity," whereas the center detector **605** is the "reflectance detector" for receiving light transmitted/reflected from the sample. EX1030, 17:36-49; EX1003 ¶259. Both types of detectors are conventional "photodiodes." EX1003 ¶259; EX1030, 13:50-62. As Dr. Mercier explains, it would have been obvious to modify 11A of Soller to position the reflectance detectors in the position of the reference detectors, since both are conventional photodiodes performing their

routine functions. EX1003 ¶¶260-61. Soller itself directly teaches modifying the arrangement of detectors. EX1030, 17:42-49, Fig. 11C. This modification to Soller would have been a straightforward substitution for a POSITA involving routine substitution of known elements. EX1003 ¶¶260-65.

"Offset" Arcs (5, 15, 21): Soller teaches a "spacing between the center illuminating fiber bundle" (*i.e.*, the fibers coupled to the LEDs) and "the outer fiber ring" (*i.e.*, the fibers coupled to the detectors) of "preferably 2-4 mm." EX1030, 18:43-46; *id.* 18:18-46, Figs. 12A, 12B. Soller depicts an arrangement where the first arc of detectors is separate (*i.e.*, "offset" and not overlapping with) the second arc of LEDs. EX1030, Fig. 11A (above), 17:36-60. A POSITA would have understood from these disclosures that Soller teaches (or, at a minimum, renders obvious) an arrangement where the first arc of detectors is "offset" (not congruent/overlapping with) the second arc of semiconductor sources. EX1003 ¶¶266-68.

Concentric (6, 16, 22): Soller discloses the light from the semiconductor sources is emitted by the "fiber bundle" and the "return reflected light" from the tissue is "received by an array of, e.g., twenty-five single fibers," which are "**configured in a ring 781 concentric** about fiber bundle 750." EX1030, 18:36-46., 16:6-39 (radiation from the tissue is collected by "signal fibers" attached to the detectors "disposed around the delivery fiber [*i.e.*, semiconductor source fiber] in a

radial, symmetrical pattern to maximize the coupling efficiency of, respectively, the incident and reflective radiation").

Soller's configuration of LEDs and detectors in concentric arcs is further depicted in Figure 11A (shown above). EX1030, Fig. 11A, 17:36-60; EX1003 ¶¶270-71, 281, 285. A POSITA would have understood these disclosures to teach or render obvious two concentric arcs of detectors/LEDs. EX1003 ¶270, 281, 285.

Motivation: A POSITA would have been motivated to implement Soller's two concentric arcs into Lisogurski's system. EX1003 ¶261-64, 271. Lisogurski teaches a sensor using multiple LEDs (*e.g.*, EX1027, 10:48-64, 19:20-39, 25:31-45) and "one or more detector[s]" (EX1027, 17:30-53), but does not require the LEDs and detectors to be arranged in a particular configuration. EX1003 ¶264, 271. Lisogurski contemplates "[a]ny suitable configuration" for the sensor, including "**multiple light sources and detectors, which may be spaced apart**." EX1027, 17:39-45.

A POSITA would have been motivated to implement Soller's two, offsetting, concentric arcs (one of the LEDs and the second of the detectors) into Lisogurski's system, because this would have been a straightforward design choice that would have achieved the benefits described by Lisogurski/Soller. EX1003 ¶¶261-64, 267-68, 271; *Intel Corp. v. PACT XPP Schweiz AG*, 61 F.4th 1373, 1380 (Fed. Cir. 2023) ("there is a motivation to combine" when the prior art teaches "a known technique

to address a known problem" if the technique is a "suitable option"). Specifically, a POSITA would have understood Soller would improve Lisogurski's system by, *e.g.*, allowing for the maximum amount of radiation to be emitted from the tissues and captured from the sample. EX1003 ¶268. Configuring the LEDs and detectors in arcs would have been a predictable arrangement of known elements with each performing the same function it was known to perform and yielding what one would expect from the arrangement, and requiring routine effort from a POSITA to achieve. EX1003 ¶¶261-64, 267-68, 271.

b) Claim 7, 17, 23:

Six LEDs: Soller teaches "between 5 and 20 LEDs." EX1030, 13:39-40, 13:13-18 ("an array of, **e.g.**, eight light-emitting diode (LED) radiation sources"), 17:36-41 ("a circular array, **e.g.**, typically at least seven, of light-emitting diode (LED) radiation sources"). A POSITA would have understood "between 5 and 20 LEDs" necessarily includes six LEDs. EX1003 ¶273, 282, 286.

Six Detectors: Soller teaches "interior detectors 105 and exterior detectors 110 for detecting radiation" (*i.e.*, comprising the "*receiver*"). EX1030, 13:50-63; EX1003 ¶274, 282, 286. Soller teaches that light from the sample is received by "an array of, e.g., twenty-five single fibers 780 configured in a ring 781," with each of the "reference detector[s] coupled to one optical fiber." EX1030, 18:32-46. Figure 11A illustrates ten reference detectors:

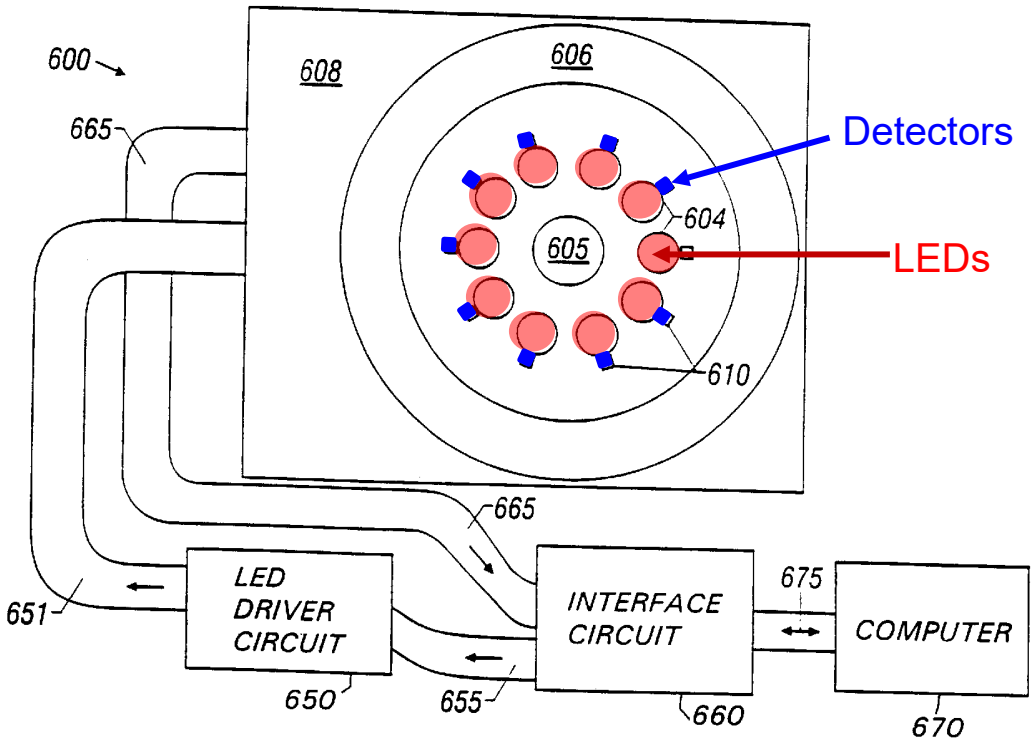

Figure 11A

EX1030, Fig. 11A (annotated), 17:36-60; EX1003 ¶274. A POSITA would have understood these disclosures would include, or, at a minimum render obvious, six detectors for receiving light from the sample. EX1003 ¶274-75.

Motivation: A POSITA would have been motivated to implement Soller's number of detectors/LEDs into Lisogurski's sensor. EX1003 ¶275. Lisogurski contemplates using multiple LEDs and multiple detectors and states that "[a]ny suitable configuration of light source 316 and detector 318 may be used," including one with "**multiple light sources and detectors**." EX1027, 17:37-45. A POSITA

therefore would have been motivated to design a device and/or to modify the Lisogurski's device to comprise six LEDs and six detectors in the manner taught by Soller. EX1003 ¶275. Such a modification would have been a straightforward design choice involving the combination of known elements, and achieved with routine effort that would increase accuracy of the system. EX1003 ¶275; *Intel*, 61 F.4th at 1380.

c) Claim 8, 18, 24:

It would have been an obvious design choice for a POSITA to place the six detectors on the first arc surrounding the six LEDs; in fact, Soller depicts/renders obvious such an arrangement:

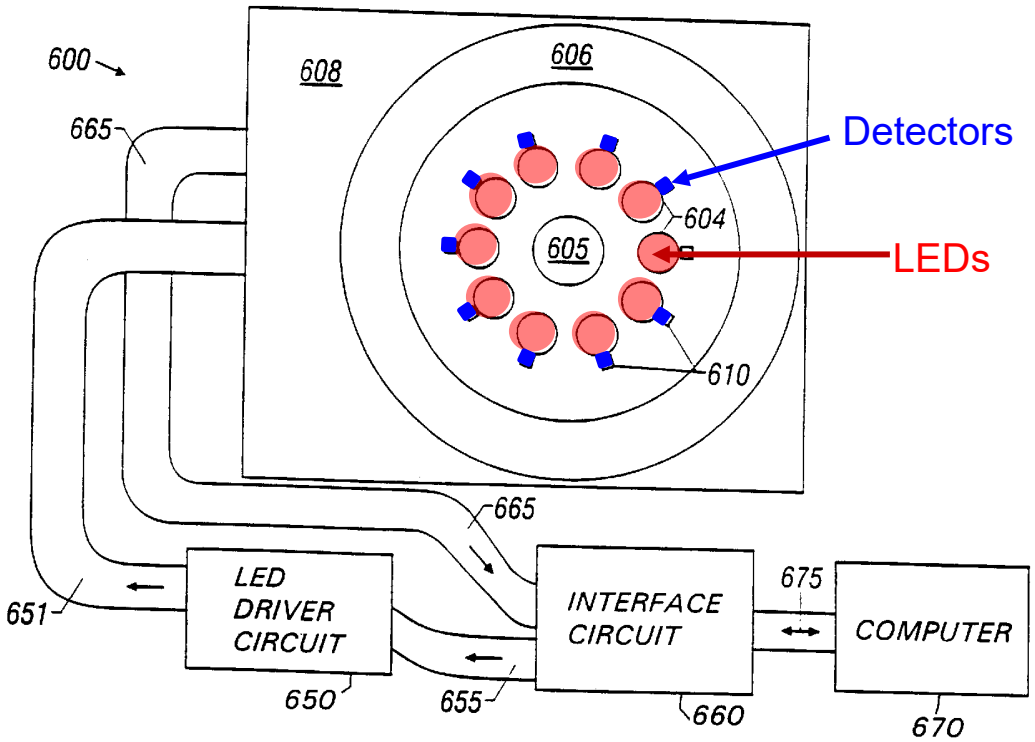

Figure 11A

EX1030, Fig. 11A (annotated); EX1003 ¶¶277, 283, 287. This configuration would have been a straightforward design choice that a POSITA would have found obvious for the reasons discussed above. *Supra* §§VII.E.2.a-b.

d) Claim 10:

See §VII.B.2.v. (cl. 20); EX1003 ¶279.

F. Ground 5: Claims 12-13 and 26 would have been obvious over Lisogurski in view of Carlson and Tran

1. Overview of Ground 5

a) Tran

Tran discloses a heart monitoring system with a statistical analyzer to monitor patient health. EX1031, Abstract, Fig. 1, 8:28-53. The patient wears a monitoring device, like a watch, that communicates health information to a server, which passes it to a statistical analyzer. EX1031, 8:44-53, 9:23-54, 11:1-31, 54:14-57:13; EX1003 ¶98. The monitored health information includes pulse oximetry measurements. EX1031, 25:20-29, 25:36-43, 26:17-29, 36:62-37:13, 46:25-42, 60:58-61:37, 74:29-44. Tran's statistical analyzers can help "track a patient's risk of stroke or heart attack[]." EX1031, 54:35-36. The analyzers use "artificial neural networks," a form of artificial intelligence, to classify potential risks to warn patients or health-care providers. EX1031, 22:24-28, 74:45-46, 75:18-20, 94:57-65; EX1003 ¶99. Tran's monitoring device can be used with a smartphone. EX1031, 33:50-34:40.

b) Motivation to combine

In the '484 IPR, the Board found (and Omni did not cross-appeal) that a POSITA would have been motivated to combine Tran with Carlson and Lisogurski. EX1011, 46-47; EX1012, n.2. Omni is collaterally estopped from challenging this combination. *Supra* §§VII.A.

Lisogurski, Carlson, and Tran are analogous references, each describing techniques applicable to measurements taken by wearable optical sensing devices, like pulse oximeters. EX1003 ¶¶114-15. A POSITA would have considered the references together when implementing a system based on Lisogurski. EX1003 ¶116. For example, a POSITA reading Lisogurski would have looked to other references disclosing additional techniques to improve the performance of optical sensing systems as part of the ordinary design process. EX1003 ¶116.

Lisogurski describes processing collected data to track a patient's health status. Market trends would have motivated a POSITA to find additional ways to use Lisogurski's tracked data in a mobile or remote scenario. EX1003 ¶116. Tran describes an "artificial neural network" that analyzes, among other things, pulse oximetry data, and provides warnings regarding a patient's condition. EX1031, 22:23-28; *compare* EX1031, 36:62-37:13 *with* EX1027, 26:15-25; *see also* EX1027, 15:43-65, 18:58-65. Tran explains this data analysis technique "provides an in-depth, cost-effective mechanism to evaluate a patient's cardiac condition." EX1031, 5:5-6. Tran's technique allows for "[c]ertain cardiac conditions [to] be controlled, and in some cases predicted, before they actually occur." EX1031, 5:6-7. A POSITA would have been motivated to incorporate Tran's data analysis technique into Lisogurski, with Carlson, to achieve the same benefits. EX1003 ¶¶115-16. A POSITA would have reasonable expectation of success implementing Tran's neural

networks and analysis techniques into Lisogurski's system, as modified by Carlson, given the overlapping applications of the three references and because Tran's data analysis techniques were known in the art, such that implementing Tran into Lisogurski's system would have been a routine modification yielding predictable results. EX1003 ¶¶115-16.

2. Analysis of Ground 5

a) Claim 12[a], 26[a]:

The Board found (and Omni did not dispute) Lisogurski in view of Carlson and Tran teaches 12[a] and 26[a]. EX1011, 48-49; EX1012, n.2; EX1013, 11.

Tran's data analysis technique applies to data collected from a patient using a "wearable patient monitoring appliance[]." EX1031, 9:23-53. Once collected, Tran's measurement system "feed[s] the data to a statistical analyzer such as a neural network…" EX1031, 11:6-30, 3:6-13. Tran's data driven analyzers may incorporate "engineered (artificial) neural networks," a form of "**artificial intelligence**." EX1031, 22:24-30; EX1003 ¶¶289-90, 306. Tran's neural networks analyze patient data to "flag potentially dangerous conditions," which "can be specified as an event or a pattern that can cause physiological…damage to the patient." EX1031, 11:6-19. When such conditions occur, the system "displays a warning to a patient and connects the patient to the appropriate emergency response

authority." EX1031, 87:33-37, 85:60-61, 88:48-50, 90:58-61. A POSITA would have understood Tran teaches using AI to "make decisions." EX1003 ¶290.

A POSITA would have been motivated to integrate Tran's neural networks and associated techniques into Lisogurski's system to improve the processing of collected physiological signals and to process patient data and flag dangerous conditions ("*mak[e] decisions*"). EX1003 ¶¶290-91. This combination would have required routine effort and would have achieved the benefits described by Tran/Lisogurski, specifically, an improved wearable health sensor with optimal power consumption. EX1003 ¶291, 306.

b) Claim 12[b], 26[b]:

The Board found (and Omni did not dispute/cross-appeal) Tran teaches "perform[ing] pattern identification or classification." EX1011, 52-53; EX1013 11-12; EX1012, n.2. The Board found Lisogurski (with Carlson and Tran) teaches a wearable device configured "to compare a property of at least some of the output signal to a threshold." EX1013, 3-7.

<u>Pattern Identification/Classification</u>: Tran explains that neural networks are "quite robust at recognizing user habits or patterns." EX1031, 23:39-50. Specifically, Tran employs neural networks to analyze "a patient's vital signs," EX1031, 11:1-8; *id.*, 9:23-54, and **flags patterns** in these vital signs if they represent possible dangerous conditions, EX1031, 11:1-23, 23:39-50, 22:23-59, 23:4-16;

EX1003 ¶¶293, 307. Tran's data analysis technique includes a Hidden Markov Model to "derive a set of reference pattern templates, [where] each template is representative of an **identified pattern** in a vocabulary set of reference treatment patterns." EX1031, 24:45-18, 80:24-81:3. Tran teaches the neural network and Hidden Markov Model (HMM) can be used together. EX1031, 24:58-60. Accordingly, together, Tran's neural network and HMM perform "pattern identification or classification." EX1003 ¶¶293, 307.

Apply Threshold Function to Comparison with Stored Data Set: Lisogurski discloses comparing the detected signals to a variety of thresholds. EX1003 ¶294. For example, "the blood oxygen saturation may be **compared to a threshold** or target value, such as threshold 830," EX1027, 24:41-43, and the outcome of that comparison may be used to change the device's mode of operation. EX1027, 24:43-57. Lisogurski teaches comparing the output signal to thresholds to identify portions of that signal of interest for further processing or that could be used to change the light source modulation. EX1027, 40:42-41:39, claims 15-18. Lisogurski explains that the measurement system "may use historical information from previous pulse cycles in determining thresholds" (*i.e.*, a "*stored data set*") and may employ "conventional servo algorithms, other suitable criteria, or any combination thereof" (*i.e.*, a "*threshold function*") in making such a comparison to these thresholds. EX1027, 40:42-41:14; EX1003 ¶¶294, 307.

Similarly, Tran's data analysis technique allows the user to choose "a condition that they would like to be alerted to and [] provid[e] the parameters (e.g., **threshold value** for the reading) for alert generation." EX1031, 27:26-28. If such a condition is met, the user receives an alert according to their set preference. EX1027, 27:26-28. A POSITA would have recognized Tran's wearable device compares measured data against a pre-set threshold value (*i.e.*, "*appl[ies] a threshold function to a comparison with a stored data set*") and would have been motivated to implement this technique to improve Lisogurski's own threshold value comparison. EX1003 ¶295. Doing so would have required routine effort and would have been an obvious combination of elements. EX1003 ¶¶295-296.

c) Claim 12[c], 26[c]:

In the First '484 FWD, the Board construed "identify[ing] an object" to mean "to recognize or establish an object as being a particular thing," a construction affirmed by the Federal Circuit, which remanded for the Board to consider Apple's alternative argument that Lisogurski/Tran teach this limitation. EX1011, 10, *aff'd* EX1012, *5. In its Second FWD, the Board found Lisogurski and Tran teach "calculating an amount of a blood constituent" and therefore teach "identify[ing] an object." EX1013, 3-7. This is the only limitation Omni appealed in the '484 IPR. EX1061.

The Board also found in the '533/'484 IPRs (and Omni did not dispute) Lisogurski's "cardiac cycle modulation" technique (which may employ regression-based algorithms) "improv[es] SNR." EX1018, 15; EX1008, 24-25, 28-30; EX1011, 28-43.

Selection or Identification of An Object: Lisogurski and Tran both teach techniques for selecting or identifying blood oxygen saturation and other blood constituents. EX1031, 25:36-43, 26:17-29, 36:62-37:13, 46:25-42, 60:58-61:37, 74:29-67; EX1027, 4:36-62 ("The light intensity or the amount of light absorbed may then be used to calculate…an amount of a blood constituent (e.g., oxyhemoglobin)"), 9:38-42, 24:41-57, 37:2-12. Measuring blood oxygen saturation requires **selecting** oxygenated and deoxygenated hemoglobin from among other blood constituents, and then **identifying** and quantifying both components, which Lisogurski and Tran do by measuring reflected light at particular wavelengths known to be associated with each substance. EX1003 ¶¶299, 308; EX1027, 4:42-51; EX1031, 37:2-12, 50:10-15. The '304 patent discloses the same technique for selecting and measuring components of a substance. EX1001, 20:5-15, 35:27-44. Thus, Lisogurski and Tran both teach **selecting *or* identifying** objects—specifically, oxygenated and deoxygenated hemoglobin. EX1003 ¶¶299-300, 308.

Improve SNR by Applying Regression Signal Processing Methodologies *or* Multivariate Techniques: Lisogurski teaches "vary[ing] the algorithm used to

determine a physiological parameter based, in part, on the cardiac cycle modulation technique," and that "[i]f the cardiac cycle modulation technique detects the entire pulse, a different blood oxygen saturation detection algorithm may be used (e.g., a **regression based algorithm**)." EX1027, 9:36-45. Lisogurski teaches a cardiac cycle modulation technique can improve SNR of particular signals. EX1027, 25:49-55; 31:11-24, 31:39-55. For example, Lisogurski teaches "particular segments of a respiratory cycle may provide an **increased signal to noise ratio**" and that "it may be desired to correlate a modulation technique with respiration variations or both respiration variations and cardiac pulses." EX1027, 25:66-26:14. "[W]hen cardiac cycle modulation is properly selected, the accuracy of monitoring functions can be enhanced." EX1027, 41:40-58. A POSITA would have understood from these teachings that Lisogurski improves SNR of a selected/identified object (*e.g.*, oxygenated hemoglobin) by applying multivariate ***or*** **regression** signal processing techniques. EX1003 ¶302, 308.

d) Claim 13:

See §VII.B.2.v. (cl. 20); EX1003 ¶305.

G. Ground 6: Claim 9 would have been obvious over Lisogurski in view of Carlson, Soller, and Tran.

1. Overview of Ground 6

a) Motivation to combine

A POSITA would have been motivated to combine Lisogurski, Carlson, Soller, and Tran. *Supra* §§VII.E.1.b; VII.F.1.b. All are analogous art describing optical sensors that allow for accurate and efficient mobile monitoring of physiological parameters. EX1003 ¶118. Market trends would have motivated a POSITA to improve wearable optical sensors by improving their accuracy and power requirements, part of the ordinary design process. *Id.*

A POSTA would have had a reasonable expectation of success combining these references for the reasons discussed *supra* §§VII.E.1.b; VII.F.1.b. EX1003 ¶118. Implementing Carlson's "beam shaping element" and modulation techniques, with Soller's arrangement and number of LEDs and detectors, and Tran's data analysis techniques, would have been routine modifications to Lisogurski for which a POSITA would have had a reasonable expectation of success. *Id.*

2. Analysis of Ground 6

a) Claim 9[a]:

See §VII.F.2.a. (12a); EX1003 ¶310.

b) Claim 9[b]:

See §VII.F.2.b (12b); EX1003 ¶311.

c) Claim 9[c]:

See §VII.F.2.c (12c); EX1003 ¶312.

VIII. SECONDARY CONSIDERATIONS

Petitioner is unaware of any secondary considerations (EX1003 ¶79), but reserves the right to respond if Omni identifies any.

IX. CONCLUSION

Petitioner has established a reasonable likelihood that the Challenged Claims are unpatentable, and respectfully requests IPR be instituted.

Dated: September 24, 2025

Respectfully Submitted,

/s/ *Jaysen S. Chung*
Jaysen S. Chung, *Lead Counsel*
Reg. Number: 68,199
Gibson, Dunn & Crutcher LLP
One Embarcadero Center, Suite 2600
San Francisco, CA 94111-3715
Tel: 415-393-8271
JSChung@gibsondunn.com

Brian Rosenthal (*Notice of Intent to Designate Provisionally Recognized PTAB Attorney forthcoming*)
Gibson, Dunn & Crutcher LLP
200 Park Avenue
New York, NY 10166-0193
Tel: 212-351-2339
BRosenthal@gibsondunn.com

Y. Audrey Yang
Reg. Number: 74,393
Gibson, Dunn & Crutcher LLP

2001 Ross Ave., Suite 2100
Dallas, TX 75201
Tel: 214-698-3215
AYang@gibsondunn.com

Counsel for Petitioner WHOOP, Inc.

.

APPENDIX A: CHALLENGED CLAIM LISTING

No.	Limitation
1[pre]	A measurement system comprising
1[a]	a light source comprising a plurality of semiconductor sources that are configured to generate an output optical beam with one or more optical wavelengths, the light source configured to increase signal-to-noise ratio by increasing a light intensity relative to an initial light intensity from at least one of the plurality of semiconductor sources;
1[b]	a measurement device configured to;
1[c]	receive a portion of the output optical beam, and;
1[d]	deliver an analysis output beam to a sample;
1[e]	a receiver configured to;
1[f]	receive and process at least a portion of the analysis output beam reflected or transmitted from the sample;
1[g]	generate an output signal representing at least in part a non-invasive measurement on blood contained within the sample;
1[h]	synchronize to the light source,
1[i]	capture light while the semiconductor sources are off and convert the captured light into a first signal,
1[j]	capture light while at least one of the semiconductor sources is on and convert the captured light into a second signal, the captured light including at least a part of the at least a portion of the analysis output beam reflected or transmitted from the sample, and
1[k]	the measurement system further configured to improve the signal-to-noise ratio by differencing the first signal and the second signal;
1[l]	a smart phone or tablet comprising a wireless receiver, a wireless transmitter, a display, a microphone, a speaker, one or more buttons or knobs, a microprocessor and a touch screen, the smart phone or tablet configured to:
1[m]	receive and process at least a portion of the output signal,
1[n]	store and display the processed output signal, and

No.	Limitation
1[o]	transmit at least a portion of the processed output signal over a wireless transmission link; and
1[p]	a cloud configured to:
1[q]	receive, over the wireless transmission link, an output status comprising the at least a portion of the processed output signal,
1[r]	process the received output status to generate processed data, and
1[s]	store the processed data.
2	The measurement system of claim 1, wherein the plurality of semiconductor sources comprises at least one of: light emitting diodes (LEDs), laser diodes (LD's), tunable LD's, and super-luminescent laser diodes (SLDs), and wherein the measurement system further comprises a reflective surface to receive and redirect at least some of the at least a portion of the analysis output beam reflected or transmitted from the sample.
3	The measurement system of claim 1, wherein the light source is further configured to increase the light intensity from the plurality of semiconductor sources by spatially coupling the optical output beam from at least two of the plurality of semiconductor sources.
4	The measurement system of claim 1, wherein the receiver comprises a plurality of detectors arranged along a first arc, and wherein the plurality of semiconductor sources are arranged along a second arc.
5	The measurement system of claim 4, wherein the first arc is offset from the second arc.
6	The measurement system of claim 4, wherein the first arc and the second arc are concentric.
7	The measurement system of claim 6, wherein the plurality of semiconductor sources comprises six light emitting diodes, and wherein the receiver comprises six detectors.
8	The measurement system of claim 7, wherein the six detectors are located on the first arc surrounding the six light emitting diodes.
9[a]	The measurement system of claim 8, wherein the measurement system is configured to use artificial intelligence in making decisions;

No.	Limitation
9[b]	wherein the measurement system is configured to perform pattern identification or classification, and wherein the measurement system is configured to apply a threshold function to a comparison with a stored data set; and
9[c]	wherein the measurement system is at least in part configured for selection or identification of an object, and wherein the measurement system is configured to improve a signal-to-noise ratio of the selection or identification by applying regression signal processing methodologies or multivariate techniques.
10	The measurement system of claim 8, wherein the light source is configured to further increase signal-to-noise ratio by increasing a pulse rate of at least one of the plurality of semiconductor sources from an initial non-zero pulse rate.
11[pre]	A measurement system comprising;
11[a]	a wearable measurement device for measuring one or more physiological parameters, including a light source comprising a plurality of semiconductor sources that are configured to generate an output optical beam with one or more optical wavelengths;
11[b]	the light source configured to increase signal-to-noise ratio by increasing a light intensity relative to an initial light intensity from at least one of the plurality of semiconductor sources;
11[c]	the wearable measurement device configured to receive a portion of the output optical beam and to deliver an analysis output beam to a sample;
11[d]	the wearable measurement device further comprising a receiver configured to:
11[e]	receive and process at least a portion of the analysis output beam reflected or transmitted from the sample,
11[f]	generate an output signal representing at least in part a non-invasive measurement on blood contained within the sample,
11[g]	synchronize to the light source,
11[h]	capture light while the semiconductor sources are off and convert the captured light into a first signal,

No.	Limitation
11[i]	capture light while at least one of the semiconductor sources is on and convert the captured light into a second signal, the captured light including at least a part of the at least a portion of the analysis output beam reflected or transmitted from the sample,
11[j]	wherein the measurement system is further configured to improve the signal-to-noise ratio by differencing the first signal and the second signal
11[k]	a smart phone or tablet comprising a wireless receiver, a wireless transmitter, a display, a microphone, a speaker, one or more buttons or knobs, a microprocessor and a touch screen, the smart phone or tablet configured to receive and process at least a portion of the output signal, to store and display the processed output signal, and to transmit a portion of the processed output signal over a wireless transmission link; and
11[l]	a cloud configured to receive over the wireless transmission link an output status comprising the at least a portion of the processed output signal, to process the received output status to generate processed data and to store the processed data, and wherein the cloud is capable of storing a history of at least a portion of the received output status over a specified period of time.
12[a]	The measurement system of claim 11, wherein the measurement system is configured to use artificial intelligence in making decisions;
12[b]	wherein the measurement system is configured to perform pattern identification or classification, and wherein the measurement system is configured to apply a threshold function to a comparison with a stored data set; and
12[c]	wherein the measurement system is at least in part configured for selection or identification of an object, and wherein the measurement system is configured to improve a signal-to-noise ratio of the selection or identification by applying regression signal processing methodologies or multivariate techniques.
13	The measurement system of claim 12, wherein the light source is configured to further increase the signal-to-noise ratio by increasing a pulse rate of at least one of the plurality of semiconductor sources from an initial non-zero pulse rate.

No.	Limitation
14	The measurement system of claim 11, wherein the plurality of semiconductor sources comprises at least one of: light emitting diodes (LEDs), laser diodes (LD's), tunable LD's, and super-luminescent laser diodes (SLDs), and the measurement system further comprising a reflective surface to receive and redirect at least some of the at least a portion of the analysis output beam reflected or transmitted from the sample.
15	The measurement system of claim 11, wherein the receiver comprises a plurality of detectors arranged along a first arc, and wherein the plurality of semiconductor sources are arranged along a second arc that is offset from the first arc.
16	The measurement system of claim 15, wherein the first arc and the second arc are concentric.
17	The measurement system of claim 16, wherein the plurality of semiconductor sources comprises six light emitting diodes, and wherein the receiver comprises six detectors.
18	The measurement system of claim 17, wherein the six detectors are located on the first arc surrounding the six light emitting diodes.
19[pre]	A wearable device for use with a smart phone or tablet, the wearable device comprising:
19[a]	a measurement device including a light source comprising a plurality of semiconductor sources for measuring one or more physiological parameters, the measurement device configured to:
19[b]	generate, by modulating at least one of the semiconductor sources having an initial light intensity, an input optical beam having one or more optical wavelengths, and
19[c]	receive and to deliver a portion of the input optical beam to tissue, wherein the tissue reflects a least a portion of the input optical beam delivered to the tissue;
19[d]	the measurement device further comprising a receiver configured to:
19[e]	capture light while the semiconductor sources are off and convert the captured light into a first signal, and

No.	Limitation
19[f]	capture light while at least one of the semiconductor sources is on and convert the captured light into a second signal, the captured light including at least a portion of the input optical beam reflected from the tissue;
19[g]	synchronize to the modulation of the at least one of the semiconductor sources;
19[h]	the measurement device further configured to improve a signal-to-noise ratio of the input optical beam reflected from the tissue by:
19[i]	differencing the first signal and the second signal, and
19[j]	increasing the light intensity relative to the initial light intensity from at least one of the semiconductor sources;
19[k]	the measurement device further configured to generate an output signal representing at least in part a non-invasive measurement on blood contained within the tissue;
19[l]	the wearable device configured to communicate with the smart phone or tablet, the smart phone or tablet comprising a wireless receiver, a wireless transmitter, a display, a voice input module, a speaker, and touch screen; and
19[m]	the smart phone or tablet configured to:
19[n]	receive and to process at least a portion of the output signal,
19[o]	store and display the processed output signal, and
19[p]	transmit at least a portion of the processed output signal over a wireless transmission link.
20	The wearable device of claim 19, wherein the light source is configured to further improve the signal-to-noise ratio of the input optical beam reflected from the tissue by increasing a pulse rate of at least one of the plurality of semiconductor sources from an initial non-zero pulse rate.
21	The wearable device of claim 20, wherein the receiver comprises a plurality of detectors arranged along a first arc, and wherein the plurality of semiconductor sources are arranged along a second arc that is offset from the first arc.
22	The wearable device of claim 21, wherein the first arc and the second arc are concentric.

No.	Limitation
23	The wearable device of claim 22, wherein the plurality of semiconductor sources comprises six light emitting diodes, and wherein the receiver comprises six detectors.
24	The wearable device of claim 23, wherein the six detectors are located on the first arc surrounding the six light emitting diodes.
25[a]	The wearable device of claim 19, further comprising a cloud configured to: receive, over the wireless transmission link, an output status comprising the at least a portion of the processed output signal,
25[b]	process the output status to generate processed data, and
25[c]	store the processed data, and
25[d]	wherein the cloud is capable of storing a history of at least a portion of the output status over a specified period of time.
26[a]	The wearable device of claim 19, wherein the wearable device is configured to use artificial intelligence in making decisions;
26[b]	wherein the wearable device is configured to perform pattern identification or classification, and wherein the wearable device is configured to apply a threshold function to a comparison with a stored data set; and
26[c]	wherein the wearable device is at least in part configured for selection or identification of an object, and wherein the wearable device is configured to improve a signal-to-noise ratio of the selection or identification by applying regression signal processing methodologies or multivariate techniques.
27	The wearable device of claim 19, wherein the measurement device further comprises a reflective surface configured to receive and redirect at least a portion of light reflected from the tissue.

CERTIFICATION UNDER 37 C.F.R. § 42.24(d)

Under the provisions of 37 C.F.R. § 42.24(d), the undersigned attorney hereby certifies that the word count for Sections I and III-IX of the foregoing Petition for *Inter Partes* Review is 13,991, according to the word count tool in Microsoft Word.

DATED: September 26, 2025

Respectfully Submitted,

/s/ Jaysen S. Chung

Jaysen S. Chung, *Lead Counsel*
Reg. Number: 68,199
Gibson, Dunn & Crutcher LLP
One Embarcadero Center, Suite 2600
San Francisco, CA 94111-3715
Tel: 415-393-8271
JSChung@gibsondunn.com

Attorney for Petitioner WHOOP, Inc.

CERTIFICATE OF SERVICE

The undersigned certifies service pursuant to 37 C.F.R. §§ 42.6(e) and 42.105(a), (b) on the Patent Owner via FedEx Priority Overnight of a copy of this Petition for *Inter Partes* Review and supporting materials at the correspondence address of record for the '304 patent shown in the USPTO Patent Center:

109543 - Brooks, Kushman P.C./Cheetah Omni MedSci
150 W 2nd St., Suite 400N
Royal Oak, MI 48067
United States

A courtesy copy was also sent via electronic mail to Patent Owner's litigation counsel at the following addresses:

Daniel S. Stringfield
dstringfield@nixonpeabody.com
Timothy P. Maloney
tmaloney@nixonpeabody.com
Daniel D. Georgiev
dgeorgiev@nixonpeabody.com
Peter Krusiewicz
pkrusiewicz@nixonpeabody.com
Corey T. Leggett
cleggett@nixonpeabody.com
Elizabeth M. Chiaviello
echiaviello@nixonpeabody.com
Benjamin R. Holt
bholt@nixonpeabody.com

NIXON PEABODY LLP

Stephen B. Brauerman
sbrauerman@bayardlaw.com
Ronald P. Golden III
rgolden@bayardlaw.com
Emily L. Skaug
eskaug@bayardlaw.com

BAYARD, P.A.

Ty Wilson
twilson@davisfirm.com
William E. Davis , III
bdavis@davisfirm.com

DAVIS P.C.

DATED: September 26, 2025

Respectfully Submitted,

/s/ Jaysen S. Chung

Jaysen S. Chung, *Lead Counsel*
Reg. Number: 68,199
Gibson, Dunn & Crutcher LLP
One Embarcadero Center, Suite 2600
San Francisco, CA 94111-3715
Tel: 415-393-8271
JSchung@gibsondunn.com

Attorney for Petitioner WHOOP, Inc