Paper No. 1

UNITED STATES PATENT AND TRADEMARK OFFICE

BEFORE THE PATENT TRIAL AND APPEAL BOARD

APPLE INC.,
Petitioner,

v.

OMNI MEDSCI, INC.,
Patent Owner.

Patent No. 9,651,533

Inter Partes Review No. IPR2019-00913

Petition for *Inter Partes* Review of
U.S. Patent No. 9,651,533

Table of Contents

I. Introduction 1

II. Regulatory Information 3

A. Certification that Petitioner May Contest the '533 Patent (§ 42.104(a)) 3

B. Identification of Claims Being Challenged (§ 42.104(b)) 4

C. Fee for *Inter Partes* Review (§ 42.15(a)) 5

D. Service on Patent Owner (§ 42.105) 5

III. The '533 Patent and Background Technology 5

A. Photoplethysmography 5

B. Industry Trends Drove Development of Mobile Network-Connected Devices to Track Health Traits Before 2012 8

IV. The '533 Patent 12

A. The '533 Patent Is Subject to AIA 12

B. File History 17

C. Person of Ordinary Skill in the Art 17

V. Claim Construction 18

A. **"Beam" 20**

B. **"Plurality of lenses" 21**

C. **"Pulse rate" 21**

VI. Detailed Explanation Why the '533 Patent Claims Are Unpatentable 22

A. Ground 1: Valencell-093 and Valencell-099 Render Obvious Claims 5, 7-10, 13, and 15-17 23

1. Overview of Valencell-093 23
2. Overview of Valencell-099 26
3. A Skilled Person Would Have Considered Valencell-093 With Valencell-099 27
4. Independent Claim 13 32

Omni MedSci Ex. 2017
WHOOP, Inc. v. Omni MedSci - IPR2025-01584

a) Preamble 33

b) "a wearable measurement device for measuring one or more physiological parameters" 33

(1) "including a light source comprising a plurality of semiconductor sources that are light emitting diodes" 34

(2) "the light emitting diodes configured to generate an output optical beam with one or more optical wavelengths" 35

(3) "wherein at least a portion of the one or more optical wavelengths is a near-infrared wavelength between 700 nanometers and 2500 nanometers" .35

(4) "the light source configured to increase signal-to-noise ratio by increasing a light intensity from at least one of the plurality of semiconductor sources" 36

(5) "and by increasing a pulse rate of at least one of the plurality of semiconductor sources;" 37

c) "the wearable measurement device comprising a plurality of lenses configured to receive a portion of the output optical beam and to deliver an analysis output beam to a sample;" 39

d) "the wearable measurement device further comprising a receiver configured to receive and process at least a portion of the analysis output beam reflected or transmitted from the sample and to generate an output signal" 41

e) "wherein the wearable measurement device receiver is configured to be synchronized to pulses of the light source" 42

f) "a personal device comprising a wireless receiver, a wireless transmitter, a display, a microphone, a speaker, one or more buttons or knobs, a microprocessor and a touch screen," 44

(1) "the personal device configured to receive and process at least a portion of the output signal," ...46

(2) "wherein the personal device is configured to store and display the processed output signal" 48

Omni MedSci Ex. 2017
WHOOP, Inc. v. Omni MedSci - IPR2025-01584

(3) "and wherein at least a portion of the processed output signal is configured to be transmitted over a wireless transmission link;" 49

g) "and a remote device configured to receive over the wireless transmission link an output status comprising the at least a portion of the processed output signal," 50

(1) "[the remote device configured] to process the received output status to generate processed data and to store the processed data," 52

(2) "and wherein the remote device is capable of storing a history of at least a portion of the received output status over a specified period of time." 53

5. Independent Claim 5 55

a) Preamble 55

b) "a light source comprising a plurality of … light emitting diodes …" 55

(1) "the light source configured to increase signal-to-noise ratio by increasing a light intensity from at least one of the plurality of semiconductor sources …." 55

(2) "and by increasing a pulse rate of at least one of the plurality of semiconductor sources".....55

c) "an apparatus comprising a plurality of lenses configured to receive a portion of the output optical beam and to deliver an analysis output beam to a sample" 55

d) "a receiver configured to receive and process at least a portion of the analysis output beam reflected or transmitted from the sample and to generate an output signal," 56

e) 'wherein the receiver is configured to be synchronized to pulses of the light source" 56

f) "a personal device comprising a wireless receiver, a wireless transmitter, a display, a microphone, a speaker, one or more buttons or knobs, a microprocessor and a touch screen" 56

Omni MedSci Ex. 2017
WHOOP, Inc. v. Omni MedSci - IPR2025-01584

(1) "the personal device configured to receive and process at least a portion of the output signal" 57
(2) wherein the personal device is configured to store and display the processed output signal" 57
(3) "and wherein at least a portion of the processed output signal is configured to be transmitted over a wireless transmission link".....57

g) "a remote device configured to receive over the wireless transmission link an output status comprising the at least a portion of the processed output signal," 57
(1) "to process the received output status to generate processed data and to store the processed data." .58

6. Comparison of Dependent Claims to Valencell-093 and Valencell-099 58

a) Dependent Claims 7 and 15.....58

b) Dependent Claims 8 and 16.....60

c) Dependent Claims 9 and 17.....62

d) Dependent Claim 10 63

B. <u>Ground 2</u>: Valencell-093 and Valencell-099 in view of Carlson Render Obvious Claims 5, 7-10, 13 and 15-17.....64

1. Overview of Carlson 64

2. A Skilled Person Would Have Modified The Sensor of Valencell-093 to Incorporate Elements Shown in Carlson.....65

3. Independent Claims 5 and 13.....67

4. Dependent Claims 7-10, and 15-17 69

C. <u>Ground 3</u>: Valencell-093 and Valencell-099 in view of Mannheimer Render Obvious Claims 8-9 and 16-17 69

D. No Secondary Considerations Exist 75

VII. Conclusion 75

Claim Appendix.....77

Omni MedSci Ex. 2017
WHOOP, Inc. v. Omni MedSci - IPR2025-01584

TABLE OF AUTHORITIES

Cases **Page(s)**

*Droplets, Inc. v. E*trade Bank*,
887 F.3d 1309 (Fed. Cir. 2018) 15

Kennametal, Inc. v. Ingersoll Cutting Tool Co.,
780 F.3d 1376 (Fed. Cir. 2015) 46

In re Petering,
301 F.2d at 681 46

Sinorgchem Co., Shandong v. Int'l Trade Comm'n,
511 F.3d 1132 (Fed. Cir. 2007) 20

Statutes

35 U.S.C. § 102 .....17, 23, 26, 64, 69

35 U.S.C. § 103 .....4, 17

35 U.S.C. § 111 16

35 U.S.C. § 112 .....14, 15

35 U.S.C. § 122 16

35 U.S.C. § 315 4

Pub. L. 112-29, §3(n) 17

Omni MedSci Ex. 2017
WHOOP, Inc. v. Omni MedSci - IPR2025-01584

Exhibit List

Exhibit#	Reference Name
1001	U.S. Patent No. 9,651,533
1002	U.S. Patent No. 9,651,533 File History
1003	Declaration of Brian W. Anthony, PhD
1004	Proof of Service of Summons in Omni MedSci, Inc. v. Apple Inc., No. 2:18-cv-134 (E.D. Tex.)
1005	U.S. Patent Publication No. 2012/0197093 ("Valencell-093")
1006	U.S. Patent Publication No. 2010/0217099 ("Valencell-099")
1007	U.S. Patent No. 6,505,133 ("Hanna")
1008	U.S. Patent No. 5,746,206 ("Mannheimer")
1009	U.S. Patent Publication No. 2005/0049468 ("Carlson")
1010	U.S. Patent No. 9,596,990 ("Park")
1011	U.S. Patent No. 9,241,676 ("Lisogurski")
1012	RESERVED
1013	RESERVED
1014	U.S. Patent No. 8,172,761 ("Rulkov")
1015	Provisional Application No. 61/747,487
1016	Provisional Application No. 61/747,472
1017	Provisional Application No. 61/747,477
1018	Provisional Application No. 61/754,698
1019	"The Biomedical Engineering Handbook," by Joseph D. Bronzino (1995)
1020	M. Krantz, et al., The mobile fitness coach: Towards individualized skill assessment using personalized mobile devices, Pervasive and Mobile Computing (June 2012)
1021	Patel, et al., A review of wearable sensors and systems with application rehabilitation, Journal of Neuroengineering & Rehabilitation 2012 9:21

Exhibit#	Reference Name
1022	ScienceDirect Report on M. Krantz, et al., The mobile fitness coach: Towards individualized skill assessment using personalized mobile devices, Pervasive and Mobile Computing (2012), available at https://www.sciencedirect.com/science/article/pii/S1574119212000673?via%3Dihub
1023	"The Usage of Tablets in the HealthCare Industry," by Rauf Adil, available at https://www.healthcareitnews.com/blog/usage-tablets-healthcare-industry (Aug. 2, 2012)
1024	A. More, Bluetooth Low Enegery: Wireless Connectivity for Medical Monitoring, Journal of Diabetes Science & Technology (Mar. 2010)
1025	"Absorption Coefficient and Penetration Depth," The Science of Solar, available at https://photon.libretexts.org /The_Science_of_Solar/Solar_Basics/C._Semiconductors_and_Solar_Interactions/ III._Absorption_of_Light_and_Generation/ 1._Absorption_Coefficient_and_Penetration_Depth
1026	F. Buttusi, et al., MOPET: A context-aware and user-adaptive wearable system for fitness training, Artificial Intelligence in Medicine (2008)
1027	P. Baum, et al., Strategic Intelligence Monitor on Personal Health Systems, Phase 2: Market Developments - Remote Patient Monitoring and Treatment, Telecare, Fitness/Wellnes and mHealth, JRC Scientific and Policy Reports of European Commission (2013)
1028	"Compendium of Chemical Terminology Gold Book," International Union of Pure and Applied Chemistry, Version 2.3.3 (2014)
1029	M. Swan, Senior Mania! The Internet of Things, Wearable Computing, Objective Metrics, and the Quantified Self 2.0, Journal of Sensor and Actuator Networks (2012)
1030	Merriam-Webster's Collegiate Dictionary Eleventh Edition (2011)
1031	U.S. Patent Publication No. 2012/0041767 (“Hoffman”)
1032	U.S. Patent No. 7,278,966 (“Hjelt”)
1033	Lister et al., Optical properties of human skin (Journal of Biomedical Optics 2012)
1034	Bashkatov et al., Optical properties of human skin, subcutaneous and mucous tissues in the wavelength range from 400 to 2000 nm, Journal of Physics D: Applied Physics (2005)
1035	E.F. Schubert, Light-Emitting Diodes (Cambridge Univ. Press, 2nd ed. reprinted 2014)

Exhibit#	Reference Name
1036	Barolet, Daniel, Light-Emitting Diodes (LEDs) in Dermatology (Seminars in Cutaneous Medicine and Surgery 2008)
1037	RESERVED
1038	RESERVED
1039	Omni MedSci Inc.'s Opening Claim Construction Brief, No. 2:18-cv-134-RWS (filed December 20, 2018)
1040	Apple Inc.'s Preliminary Claim Constructions and Extrinsic Evidence Pursuant to Patent Local Rule 4-2, No. 2:18-cv-134-RWS (filed November 1, 2018)
1041	Exhibit E from , Excerpts from the American Heritage Dictionary, 5th Edition, filed January 14, 2019, No. 2:18-cv-134-RWS
1042	Exhibit O, Excerpts from the American Heritage Dictionary, 5th Edition. Filed January 14, 2019. No. 2:18-cv-134-RWS
1043	Amended Joint Claim Construction and Prehearing Statement. Filed January 11, 2019. No. 2:18-cv-134-RWS
1044	Claim Construction Markman Hearing Transcript, February 6, 2019. No. 2:18-cv-134-RWS
1045	District Court Preliminary Claim Constructions. Case No. 2:18-cv-134-RWS
1046	Exhibit G, Excerpts from Merriam-Webster's Collegiate Dictionary, Eleventh Edition, No. 2:18-cv-134-RWS
1047	Exhibit N, Excerpts from Merriam-Webster's Collegiate Dictionary, Eleventh Edition, No. 2:18-cv-134-RWS
1048	U.S. Patent No. 6,044,283 ("Fein")
1049	U.S. Patent No. 5,774,213 ("Trebino")
1050	U.S. Patent No. 5,855,550 ("Lai")
1051	U.S. Patent No. 6,898,451 ("Wuori")
1052	U.S. Patent No. 4,972,331 ("Chance")
1053	Curriculum Vitae of Brian W. Anthony, PhD
1054	Dr. Mohammed Islam, Faculty Profile, University of Michigan, College of Engineering (available at https://islam.engin.umich.edu)
1055	Technology Transfer Policy, University of Michigan (available at https://techtransfer.umich.edu/for-inventors/policies/technology-transfer-policy/)

Exhibit#	Reference Name
1056	Bylaws of the University of Michigan Board of Regents, (available at http://www.regents.umich.edu/bylaws/bylawsrevised_09-18.pdf)

Petitioner's Mandatory Notices

A. Real Party in Interest (§42.8(b)(1))

The real party in interest of this petition pursuant to § 42.8(b)(1) is Apple Inc. ("Apple") located at One Infinite Loop, Cupertino, CA 95014.

B. Other Proceedings (§42.8(b)(2))

1. Patents and Applications

U.S. Patent No. 9,651,533 ("'533 Patent") is related to following issued patents or pending applications:

- U.S. Patent No. 9,164,032
- U.S. Appl. No. 15/594,053
- U.S. Appl. No. 16/015,737

2. Related Litigation

The '533 Patent has been asserted in the following litigations:

- *Omni MedSci, Inc. v. Apple Inc.*, Action No. 2-18-cv-00134-RWS (pending).

3. Patent Office Proceedings

The '533 Patent is the subject of IPR2019-00916 filed by Apple.

Omni MedSci Ex. 2017
WHOOP, Inc. v. Omni MedSci - IPR2025-01584

C. Lead and Backup Lead Counsel (§42.8(b)(3))

Lead Counsel is: Jeffrey P. Kushan (Reg. No. 43,401), jkushan@sidley.com, (202) 736-8914. Back-Up Lead Counsel are: Ching-Lee Fukuda (Reg. No. 44,334), clfukuda@sidley.com, (212) 839-7364; Kathi Cover (Reg. No. 37,803), kcover@sidley.com, (202) 736-8377; and Thomas A. Broughan III (Reg. No. 66,001), tbroughan@sidley.com, (202) 736-8314.

D. Service Information (§42.8(b)(4))

Service on Petitioner may be made by e-mail (iprnotices@sidley.com), mail or hand delivery to: Sidley Austin LLP, 1501 K Street, N.W., Washington, D.C. 20005. The fax number for lead and backup lead counsel is (202) 736-8711.

Omni MedSci Ex. 2017
WHOOP, Inc. v. Omni MedSci - IPR2025-01584

I. Introduction

Health monitoring systems based on optical sensors, which measure physiological parameters of a user based on how light interacts with the user's tissue and blood, have been ubiquitous for decades. Once found only in hospitals and doctor's offices, these monitors are now mainstream consumer devices. Over time, these devices evolved to become smaller, digital, wireless, and Internet-connected, an evolution driven by several market trends and forces. One sought to meet the needs and convenience of users for such devices to be wearable, unobtrusive and mobile. Another addressed the need to integrate these devices into a digital data processing environment based on real-time collection and delivery of user data. A third responded to consumer demand for personal health and fitness monitoring devices.

By 2012, the prior art described numerous wearable optical sensing devices with common attributes. They used LEDs emitting light at multiple wavelengths; were small, battery powered and wearable on the wrist or ear; and could wirelessly communicate with other devices. This prior art also described solutions to the various challenges of developing such devices, including mitigating noise caused by user movement and ambient light, minimizing power consumption, and arranging the electronic and optical components within the smallest possible space.

Omni MedSci Ex. 2017
WHOOP, Inc. v. Omni MedSci - IPR2025-01584

Relative to this extensive body of prior art, the contested claims of the ’533 Patent do not recite anything inventive. Rather, they cobble together well-known techniques for improving the signal-to-noise ratio of a sensor with routine and predictable combinations of known optical components, techniques a well-known textbook describes as the “basic building blocks” of such optical sensors. *See* Ex.1019 (“BE Handbook”), 765.

For example, U.S. Patent Publication No. 2012/0197093 (“Valencell-093”) (Ex.1005) and U.S. Patent Publication No. 2010/0217099 (“Valencell-099”) (Ex.1006) describe complimentary aspects of a Bluetooth headset that incorporates an optical sensor into an earbud. Valencell-099 provides detailed descriptions of the optical components used by an LED-based sensor to measure heart rate and various blood constituents, as well as signal processing techniques for extracting accurate physiological information from a detected signal in a noisy environment. Valencell-099 describes applications of such devices, including wireless communication of user health data between the sensor and a personal device such as a smart phone, which in turn communicates with a database, computer or other remote device. The combination of the headset of Valencell-093 interacting with the personal device and remote terminal of Valencell-099 renders all contested claim obvious.

Other prior art, such as U.S. Patent Publication No. 2005/0049468 ("Carlson") (Ex.1009) and U.S. Patent No. 5,746,206 ("Mannheimer") (Ex.1008), describe conventional techniques used in such optical monitors that correspond to those recited in the contested claims. For example, Carlson describes increasing a pulse rate of the emitters in order to improve a signal to noise ratio. Should Patent Owner argues that Valencell-093 does not disclose this conventional technique, it would have been obvious to modify the Valencell sensor as described by Carlson. Mannheimer teaches how to spatially arrange multiple emitters and detectors in a sensor, and then process the detected signals to remove noise interference from skin. Should Patent Owner argue that the Valencell-093 sensor does not have appropriately spaced sensors as described by claims 8-9 and 16-17, it would have been obvious to modify the Valencell-093 sensor as described by Mannheimer.

Nothing in the contested claims is inventive over this prior art. Petitioner therefore respectfully requests that trial be instituted and the contested claims cancelled.

II. Regulatory Information

A. Certification that Petitioner May Contest the '533 Patent (§ 42.104(a))

Petitioner certifies that the '533 Patent is available for *inter partes* review. Petitioner also certifies it is not barred or estopped from requesting *inter partes* review of the claims of the '533 Patent. Neither Petitioner, nor any party in privity

with Petitioner, has filed a civil action challenging the validity of any claim of the '533 Patent. The '533 Patent has not been the subject of a prior *inter partes* review by Petitioner or a privy of Petitioner.

Petitioner also certifies this petition for *inter partes* review is timely filed as this petition was filed within one year after April 10, 2018, the date Petitioner was first served with a complaint alleging infringement of a claim of the '533 Patent. *See* 35 U.S.C. § 315(b); Ex. 1004.

B. Identification of Claims Being Challenged (§ 42.104(b))

Claims 5, 7-10, 13, and 15-17 are unpatentable based on the following grounds.

(i) **Ground 1: Claims 5, 7-10, 13, and 15-17** are rendered obvious under 35 U.S.C. § 103 based on U.S. Patent Publication No. 2012/0197093 ("Valencell-093") (Ex. 1005) and U.S. Patent Publication No. 2010/0217099 ("Valencell-099") (Ex.1006).

(ii) **Ground 2: Claims 5, 7-10, 13, and 15-17** are rendered obvious under § 103 based on Valencell-093 and Valencell-099 in view of U.S. Patent Publication No. 2005/0049468 ("Carlson") (Ex.1009).

(iii) **Ground 3: Claims 8-9 and 16-17** are rendered obvious under § 103 based on Valencell-093 and Valencell-099 in view of U.S. 5,746,206 ("Mannheimer") (Ex.1008) with or without Carlson.

C. Fee for *Inter Partes* Review (§ 42.15(a))

The Director is authorized to charge the fee specified by 37 C.F.R. § 42.15(a) to Deposit Account No. 50-1597.

D. Service on Patent Owner (§ 42.105)

Omni MedSci, Inc. is identified as the patent owner of record in the assignment records for the ’533 Patent. The named inventor of the ’533 Patent, Dr. Islam, has been a member of the faculty of the University of Michigan since 1992. Ex.1054. Based on the University of Michigan Bylaw 3.10 and Technology Transfer Policy, the University of Michigan is the owner of the ’040 Patent. Ex.1055, Ex.1056 at 21-22. Dr. Islam has also purported to assign the patent to OmniMedSci. *Id*. Petitioner has thus served this petition on both the University of Michigan and Omni MedSci.

III. The ’533 Patent and Background Technology

A. Photoplethysmography

Optical health monitors use a sensing technique called photoplethysmography (“PPG”) that has been known and used for decades in medical monitoring systems. Ex.1003, ¶37; Ex.1019, 769-76, 1346-55 (discussing oximetry and other applications). PPG works by shining light through a person’s tissue and measuring the light that is either reflected back or transmitted through the tissue. Ex.1019, 766. Different components of blood and tissue absorb and reflect different wavelengths of light. Ex.1003, ¶38. By measuring how much

light is absorbed and how the absorption changes over time, a device can calculate the components of the blood and tissue. Ex.1003, ¶38.

For example, hemoglobin (the substance in blood that carries oxygen to cells) reflects more red light when it is oxygenated and absorbs more red light when it is deoxygenated. Ex.1019, 769; *see* Ex.1003, ¶39. Hemoglobin, however, reflects the same amount of infrared (IR) light whether oxygenated or deoxygenated. Ex.1019, 769. If a device measures the absorbed red and IR light multiple times per second, the device can determine several things: (i) the ratio of oxygenated to deoxygenated hemoglobin (oxygen saturation), and (ii) how the volume of blood in the tissue changes over time, allowing it to detect a person's pulse. Ex.1019, 769, 771; Ex.1003, ¶39.

PPG is an optical technique, and as such, it uses conventional optical components. Ex.1003, ¶40. The 1995 BE Handbook explains that the "basic building blocks" of optical sensor systems include lenses, mirrors, filters, beam splitters, light sources, fiber optics, and detectors (Ex.1019, 765), and illustrates their use in an exemplary device below:

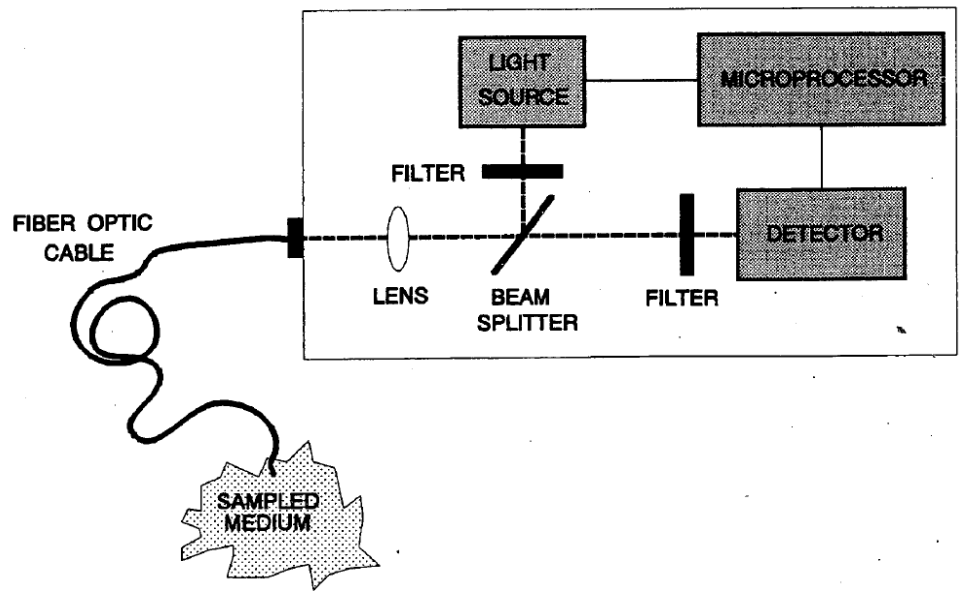

FIGURE 52.1 General diagram representing the basic building blocks of an optical instrument for optical sensor applications.

Ex.1019, 765.

Portable devices conventionally use light emitting diodes (LEDs) as the light source because LEDs are small and have low power requirements. Ex.1019, 765; Ex.1003, ¶40. As shown in the figure above, the light from the LED is directed through a lens and onto a sample. Ex.1019, 765. The light reflects back from the sample, is filtered, and sensed by a photodetector. Ex.1019, 765; Ex.1003, ¶¶41-43. The photodetector outputs a signal proportionate to the measured light intensity, and then analog-to-digital conversion and signal processing are performed to extract data. Ex.1019, 766. To improve the signal-to-noise ratio, the light source is typically modulated, and the detector uses "synchronized lock-in amplifier detection" to isolate signals that occur at the modulation frequency.

Ex.1019, 764, 766. This allows the detector to reduce the noise in the detected signal. Ex.1003, ¶¶44-45.

B. Industry Trends Drove Development of Mobile Network-Connected Devices to Track Health Traits Before 2012

From 2000 to 2012, several market trends and needs were driving the medical device industry to develop wearable, mobile sensor devices that could wirelessly communicate user data to remote devices. Ex.1003, ¶48.

One pronounced market need during this period was the challenge of providing medical care for patients in their homes or other locations where there was not easy access to a physician. This drove development of wireless monitoring technologies that could be worn by the patient and used to transmit data to a remote physician or care provider. Ex.1021, 2; Ex.1024, 462; Ex.1027, 15-31; *see* Ex.1003, ¶¶48, 52-53.

Another trend during this period was to bring heart rate sensing devices based on pulsoximetry to the consumer market for personal fitness tracking and other uses. Ex.1003, ¶¶49-50. This trend was reflected in numerous references published before and around 2012. For example, a June 2012 review observed:

> A multitude of commercial health devices and sensors, such as oximeters and heart rate monitors, formerly reserved for professional use, are now available and can be connected to smartphones. GPS watches, pedometers and heart rate monitors, allow recording and tracking of physical activity.

Ex.1020, 3; *see also, e.g.*, Ex.1009, [0004] ("Pulsoximetry measuring devices are also used in sports for control and survey of athletes."); Ex.1029, 221 ("Wristband sensors are a predecessor to smartwatches and remain a successful product category on their own…"); Ex.1005, [0003] ("There is growing market demand for personal health… monitors, for example, for gauging overall health, fitness, metabolism, and vital status during exercise, athletic training…"); Ex.1027, 33, 35.

A third trend was to take advantage of the miniaturization of electronics and communication technology, which led to the development of smaller, wearable monitoring systems for mobile health and fitness applications. Ex.1021, 3; Ex.1020, 2 *see* Ex.1003, ¶¶51-52.

A fourth trend in the medical industry was to use apps and smartphones to not only deliver care to patients but to give individuals access to health data for fitness or health issues. This drove integration of miniaturized, network-connected monitoring devices with smartphones and similar devices. Ex.1027, 9-10, 40-49; Ex.1023, 1-2 ("Doctors and nurses were the early adopters of tablets"); Ex.1021, 4; *see* Ex.1023, 5 (One of "the biggest usage of tablets stems from… [p]atient monitoring and data collection…, includ[ing] using the Bluetooth enabled sensor devices and Wi-Fi+ Bluetooth enabled interfaces to patient monitoring devices, to medical instruments that can transmit information to the tablet when in the

vicinity."); Ex.1027, 41 *see* Ex.1003, ¶¶51-52. It also led to the prevalent use of cloud-based data transfer and storage of data. Ex.1003, ¶52.

Before 2012, the combined effect of these market trends was to provide a strong motivation to integrate medical optical sensing techniques into miniaturized wearable consumer devices that communicate wirelessly with smart devices and remote services. Ex.1003, ¶¶49-50. These trends led to a proliferation of products before 2012 that shared this distributed architecture supporting personal health, sports, and mobile monitoring systems. Ex.1003, ¶53.

One illustration of that architecture was reported in Patel 2012 (Ex.1021):

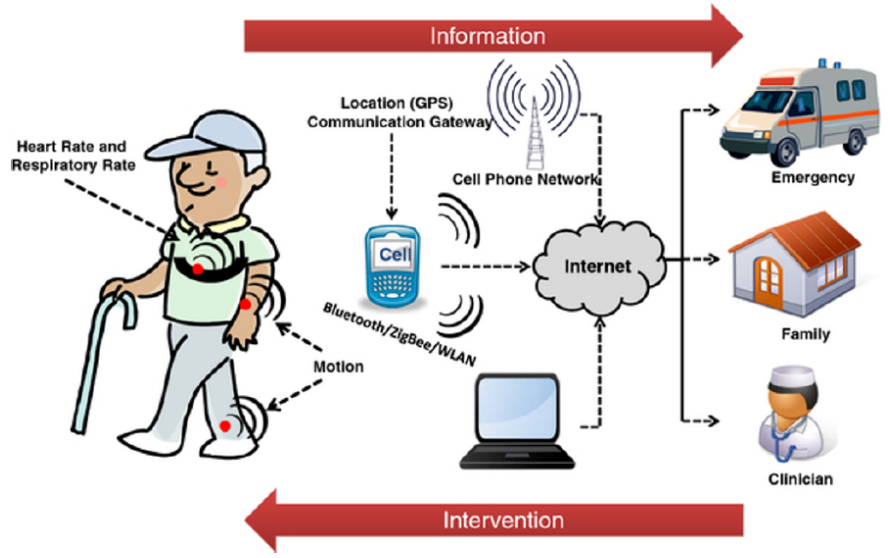

Figure 1 Illustration of a remote health monitoring system based on wearable sensors. Health related information is gathered via body-worn wireless sensors and transmitted to the caregiver via an information gateway such as a mobile phone. Caregivers can use this information to implement interventions as needed.

Ex.1021, 2. As this figure illustrates, data from wearable sensors is transmitted to a cell phone, which in turn transmits the data, along with GPS information, to

remote devices used by a clinician or maintained by an emergency responder. The data also is shown being transmitted to and stored in the cloud. Ex.1021, 4.

A 2010 publication described a similar architecture in which "medical data can be sent from a wireless monitor to a cell phone or PC and from there to a remote physician." Ex.1024, 459. As depicted, it comprised three network-interconnected components: (i) the "sensor" device on the person that collected physiological data, (ii) a host device such as a smartphone, tablet, or computer that wirelessly captured and transmitted the physiological data, and (iii) a remote web service accessible over the Internet. Ex.1024, 460; Ex.1003, ¶54.

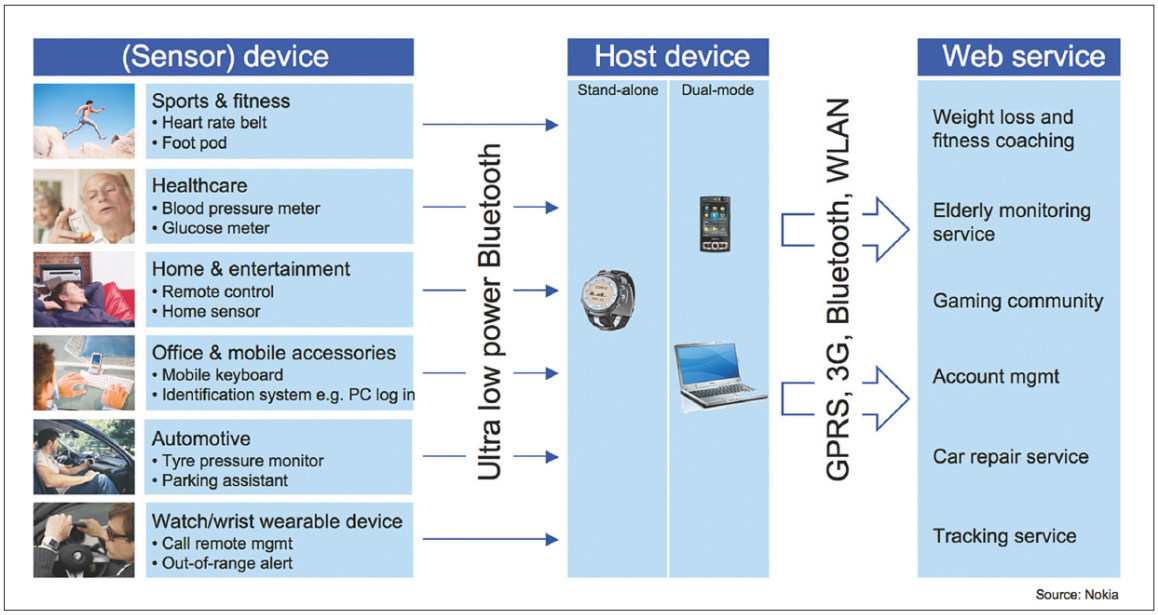

Figure 2. Bluetooth low energy will extend interoperable wireless connectivity to coin-cell-powered wireless sensors in health care, fitness, and related sectors. WLAN, wireless local area network; GPRS, general packet radio service.

Other articles from around 2012 likewise envisioned use of "cloud" based services to support this interconnected scheme. Ex.1003, ¶55. A 2012 article illustrated a cloud-based architecture implemented as a fitness app as follows:

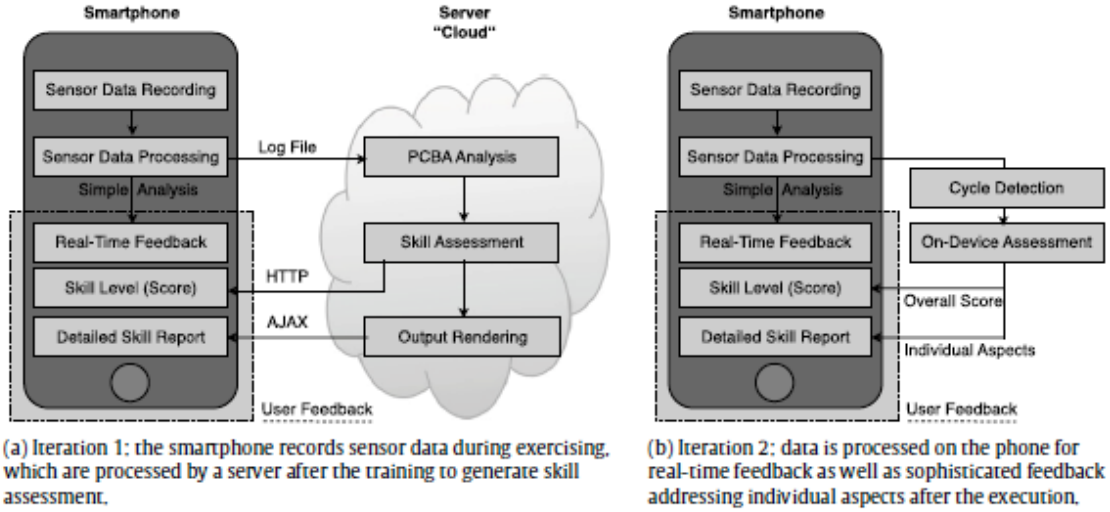

(a) Iteration 1: the smartphone records sensor data during exercising, which are processed by a server after the training to generate skill assessment.

(b) Iteration 2: data is processed on the phone for real-time feedback as well as sophisticated feedback addressing individual aspects after the execution.

Fig. 3. Iterations of the GymSkill application.

Ex.1020, 7. In this example, a smartphone records and processes sensor data, then sends the data to a cloud server for further processing, and then the cloud server returns processed data back to the smartphone for display to the user. Ex.1020, 7; Ex.1020, 6, 12. This same article specifically recognized this type of system could be used with heart rate monitors and optical sensors. Ex.1020, 12 ("Coupling with devices like heart rate monitors using e.g. ANT+ further would increase the sensed database and allow for further, more detailed physical and physiological assessments.").

IV. The '533 Patent

A. The '533 Patent Is Subject to AIA

The '533 Patent issued from U.S. Application No. 14/875,709, filed on October 6, 2015, and claims priority to U.S. provisional application 61/747,487 as shown below.

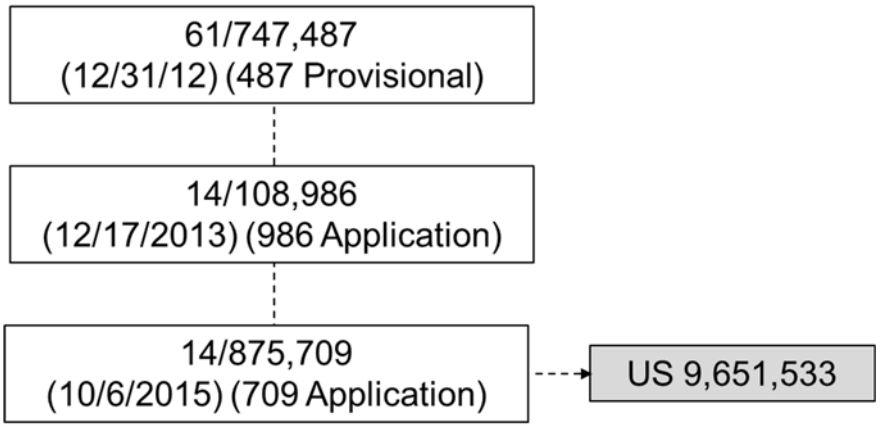

The application further incorporates by reference a number of other applications and provisional applications. Ex.1001, 1:15-44; Ex.1002, 73, [0002]-[0003].

The '487 Provisional to which applicant claims priority does not demonstrate possession of a device as described in at least claims 5, 7 and 13 of the '533 Patent. Ex.1003, ¶ 31. Claim 5 requires a "personal device" that "receives and processes" an output signal from a measurement apparatus, and then wirelessly transmits the processed signal to a "remote device."[1] The lack of written description support for these claim limitations can be easily appreciated by observing that the passages in the '533 Patent concerning these elements are absent in the'487 Provisional. *See* Ex.1001, 26:27-28-21 (adding a new section for "Wireless Link to the Cloud"). The '478 Provisional does not contain this passage

---

[1] Claim 13 contains these same limitations but further specifies additional limitations for the remote device.

or one that otherwise describes the personal device and remote device aspects of the claims. Ex.1003, ¶ 31. While the '487 Provisional describes a detection system that can send data to "a computational system, comprising computers or other processing equipment," there is no disclosure of the computing system wirelessly sending data it has processed to a remote system for additional processing. Ex.1015, [0066], [0074] (describing a computer system 1811). The '487 Provisional also describes a camera that can wirelessly interface with a computer, tablet, or smartphone, but there is no disclosure of those devices sending the camera data to a remote device. Ex.1015, [0068]. Ex.1003, ¶ 31.

Claim 7 depends from claim 5 and specifies that the "remote device" transmits: (i) "information related to a time and a position" and (ii) processed data to "a doctor, a healthcare provider, a cloud-based server and one or more designated recipients." The '487 Provisional contains no disclosure of any device transmitting information related to time and position or processed data to a doctor, healthcare provider, or a cloud-based server. Ex.1003, ¶31.

Consequently, the only provisional to which the '533 Patent claims priority does not demonstrate possession of a device as defined by claims 5, 7 and 13, as 35

U.S.C. § 112 requires. These claims may not properly claim priority to the '487 Provisional.[2]

Notably, applicant cannot rely on provisional applications that were incorporated by reference, but to which priority was not claimed, to provide written description support for the claims. Any such disclosure is "essential material" that may only be incorporated by reference via "a U.S. patent or U.S. patent application ***publication*** which 'does not itself incorporate such essential material by reference.'" 37 C.F.R. § 1.57(d); *Droplets, Inc. v. E*trade Bank*, 887 F.3d 1309, 1318 (Fed. Cir. 2018) (claim amendments can transform nonessential material into essential material, causing a § 112 violation). A provisional

---

[2] Petitioner does not concede that Patent Owner is entitled to a priority date earlier than the actual filing date of the '709 application. If Patent Owner presents arguments as to why it believes the claims are entitled to priority to any earlier filed applications, Petitioner reserves its right to respond to that showing.

application cannot be a "U.S. patent application publication" specified in Rule 57(d) because it is never published.[3]

Patent Owner may contend that incorporated matter from the provisionals is not "essential material." Plainly it is, as this material is required to provide written description support to the claims. Regardless, Patent Owner may not rely on disclosures in any of the incorporated by reference provisionals *for any purpose* before the date on which they were incorporated by reference into the disclosure of an application to which the '533 Patent makes a valid claim of benefit or priority. The earliest date when this occurred was December 17, 2013.[4] Because that date is

---

[3] A "patent application publication" is a non-provisional application filed under 35 U.S.C. § 111(a) that has been published pursuant to 35 U.S.C. § 122(b). A provisional patent application cannot be a patent application publication because it is filed under 35 U.S.C. § 111(b) and is expressly excluded from publication under § 122(b). *See* 35 U.S.C. §§ 122(b)(1), (b)(2)(A)(iii); 37 C.F.R. § 1.215; M.P.E.P. § 1121 (defining contents of a "patent application publication"); M.P.E.P. § 903.04.

[4] Petitioner reserves its right to dispute any assertion by Patent Owner that the claims are entitled to priority earlier than December 17, 2013.

after March 16, 2013, every claim of the '533 Patent is subject to the first-to-file provisions of the AIA.[5]

B. File History

The original claims that became Claims 5 and 13 did not recite: LEDs as the light source, lenses, how the light source was configured to increase signal-to-noise ratio or synchronizing the receiver to the light source. Ex.1002, 114-118, 499-504, 759-764. The Examiner rejected those original claims as obvious over the prior art, Ex.1002, 343-355, and maintained that rejection after the claims were amended to recite the first three of those elements. Ex.1002, 717-728. The applicant then added the limitation that the receiver "is configured to be synchronized to the light source," and the claims were allowed. Ex.1002, 756, 759-764, 777-785.

C. Person of Ordinary Skill in the Art

A person of ordinary skill in the art ("skilled person") would have a good working knowledge of optical sensing techniques and their applications, and familiarity with optical system design and signal processing techniques. That

---

[5] Pub. L. 112-29, §3(n); *see* MPEP 2159.02 ("AIA 35 U.S.C. 102 and 103 apply to any patent application that contains or contained at any time a claim to a claimed invention that has an effective filing date that is on or after March 16, 2013.").

Omni MedSci Ex. 2017
WHOOP, Inc. v. Omni MedSci - IPR2025-01584

knowledge would have been gained via an undergraduate education in engineering (electrical, mechanical, biomedical or optical) or a related field of study, along with relevant experience in studying or developing physiological monitoring devices (e.g., non-invasive optical biosensors) in industry or academia. Ex.1003, ¶35. This description is approximate; varying combinations of education and practical experience also would be sufficient. Ex.1003, ¶35.

Apple's positions regarding how a skilled person would have understood the '533 patent claims and the teachings of the prior art references are supported by the testimony of Brian Anthony, Ph. D., an expert in optical sensing devices who has over 20 years of experience in the field. Ex.1003, ¶¶2-9, 36.

V. Claim Construction

The parties in related district court litigation agreed that the claim language should be given its plain and ordinary meaning, except for three terms. For two of those terms, the parties offered alternative constructions and the Court provided a preliminary construction of them as follows:

"Beam"	**Apple**: Photons or light transmitted to a particular location in space.
	Omni: Photons or light transmitted to a location in space, which may be modulated or unmodulated, and which may or may not contain information.
	District Court: Photons or light transmitted to a particular location in space. A beam does not include randomly directed light. A beam is not necessarily collimated or focused.

"*One or more lenses*"	**Apple**: One or more transparent surfaces used to collimate (make parallel) or focus rays of light.
	Omni: No construction needed. Plain and ordinary meaning.
	District Court: Plain and ordinary meaning. Reject "used to collimate (make parallel) or focus rays of light." Reject that a lens can be other than transparent.

See Ex.1043 (the parties' claim constructions), Ex.1045 (preliminary claim construction).[6]

To avoid any dispute linked to claim scope, the grounds in this petition demonstrate the claims are unpatentable using the narrowest construction for each disputed claim term.[7] For "beam," the narrowest construction is Apple's proposed construction of "photons or light transmitted to a particular location in space." For "one or more lenses," the narrowest construction is Apple's proposed construction of "one or more transparent surfaces used to collimate (make parallel) or focus rays

---

[6] The district court has not yet provided a final claim construction order, which is expected to issue in the next few months. Petitioner will file the final claim construction as an exhibit when the order issues.

[7] If Patent Owner contends that special constructions should be used that are different from those it has advanced in the co-pending litigation, Petitioner may request leave to file a reply to such assertions.

of light." As explained below, these constructions are faithful to the patentee's lexicography, the specification, and the extrinsic evidence.

A. "Beam"

The claim term "*beam*" is expressly defined in the specification to "refer to photons or light transmitted to a particular location in space." Ex.1001, 8:24-26. This definition should be adopted verbatim as the patentee's chosen lexicography. *Sinorgchem Co., Shandong v. Int'l Trade Comm'n*, 511 F.3d 1132, 1136 (Fed. Cir. 2007) (patentee who acts as his own lexicographer is bound by his definition). The definition is also consistent with extrinsic evidence reflecting that a skilled artisan would understand a "beam" to mean "a collection of nearly parallel rays." Ex.1047, 106; *see also* Ex.1042, 1. Such a collection of nearly parallel rays would necessarily travel to a particular location in space, as opposed to scattering in different directions. *See* Ex.1001, 6:57-63 (distinguishing a beam from "stray light from a reflection or scattering"), 15:45-47 (directing an array of beams), (3:37-41) (delivering a beam to a sample), Fig. 12C and 20:35-50 (showing a beam directed to sample and scattered light reflected from the sample); Ex.1003, ¶61. The district court recognized this point in its preliminary construction, noting that a beam does not include randomly directed light. *See* Ex.1045.

Therefore "*beam*" should be construed to mean photons or light transmitted to a particular location in space.

B. "Plurality of lenses"

The only type of lens described by the '533 Patent is one that will "collimate or focus the light." Ex.1001, 15:7-8, 12:8-10, 12:39-40, 13:7-9. Consistent with the disclosure of only this type of lens, the claim language specifies that the lenses are "configured to receive and to deliver a portion of the input optical beam to tissue." To perform these claimed functions, the lens must be transparent to the received light so that it can pass through the lens and travel to the tissue. Ex.1003, ¶64. And, in order to deliver the received beam to a particular location in space, the lens must collimate or focus the beam. *Id*. These defining characteristics of the claimed lens are consistent with the dictionary definition of lens:

> a piece of transparent material (as glass) that has two opposite regular surfaces either both curved or one curved and the other plane and that is used either singly or combined in an optical instrument for forming an image by focusing rays of light.

Ex.1046, 712; *see also* Ex.1041, 481 ("[a] piece of glass or other transparent material").

Therefore a "*plurality of lenses*" should be construed to mean two or more transparent surfaces used to collimate (make parallel) or focus rays of light.

C. "Pulse rate"

The parties agreed in district court that a skilled artisan would have understood that "*pulse rate*" means "number of pulses of light per unit of time." This definition is consistent with the '533 Patent's description of a pulse repetition

rate of a light source and measuring the pulsed output rate using Hertz. Ex.1001, 21:55-59 ("a pulse repetition rate between one kilohertz to about 100 MHz or more"), 25:65-26:1. Hertz is the International System of Units unit for frequency or number of cycles per second. Ex.1003, ¶66. Thus, a skilled person would have understood this term to refer to the number of pulses of light per unit of time. Ex.1003, ¶66.

VI. Detailed Explanation Why the '533 Patent Claims Are Unpatentable

Independent claims 5 and 13 each define a measurement system, using substantially similar limitations. There are two primary differences. First, claim 5 specifies the system comprises an apparatus, a personal device, and a remote device, while claim 13 specifies the same three devices but further that the apparatus is a "wearable measurement device." Second, both claims require the remote device to store received output status data, but claim 13 further specifies the remote device is capable of storing a "history" of that data. In other words, because claim 5 fully encompasses systems as they are defined in claim 13, and prior art suggesting systems that render claim 13 obvious will necessarily render claim 5 obvious. Claim 13 is thus is illustrative, and appears in the attached claim appendix.

Claims 5 and 13, along with the dependent claims, cannot be meaningfully differentiated from the devices and systems described by the Valencell-093 and

Valencell-099 references. As explained below, any distinctions that Patent Owner may contend exist would not render the claims patentable, particularly when the Valencell references are considered in combination with Carlson or Mannheimer.

A. Ground 1: Valencell-093 and Valencell-099 Render Obvious Claims 5, 7-10, 13, and 15-17

1. Overview of Valencell-093

Valencell-093 was filed on January 25, 2012, and published on August 2, 2012. It is prior art under 35 U.S.C. § 102(a) (AIA) and § 102(a) and (e) (pre-AIA).

Valencell-093 describes a Bluetooth headset with a sensor that can measure heart rate and blood constituents of the user such as blood metabolite level, blood oxygen level, protein levels and water content of blood, and cholesterol, among many others. Ex.1005, [0006], [0050], [0090], [0109]. Its objective is "to teach how to make a wearable monitor, such as an earbud monitor, that may provide accurate information on physiological conditions in the midst of environmental noise, such as noise from ambient light and/or sunlight." Ex.1005, [0112]. Figure 1 shows components of the wearable monitor:

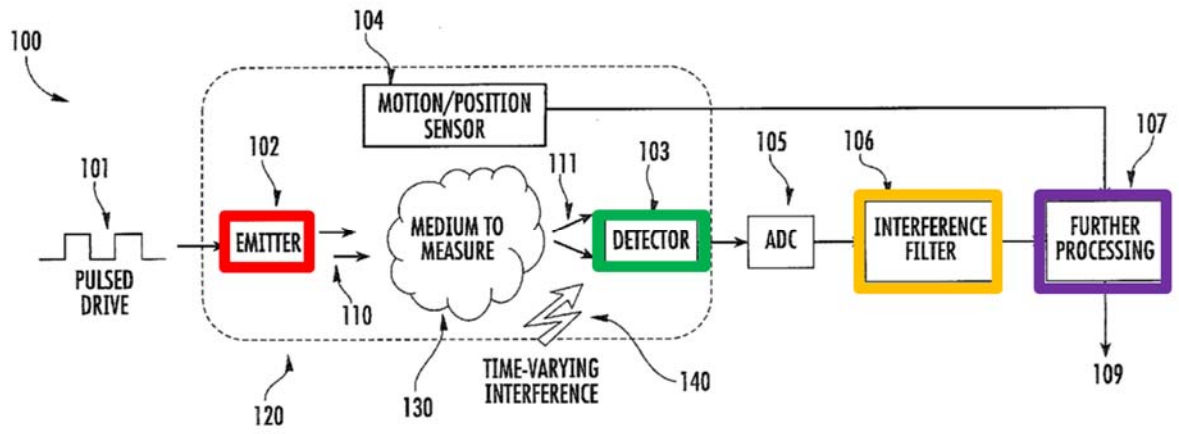

As shown, at least one emitter 102 emits modulated optical energy 110 at a target region 120 of a medium 130. Ex.1005, [0107], [0108]. The target region 120 can be a user's ear, wherein the medium 130 "comprises blood vessels and/or blood flow within the ear region." Ex.1005, [0108]. The energy 110 interacts with the medium 130 to generate a scattered light response 111, which is detected by at least one detector 103. Ex.1005, [0107]. "The outputs of the detector 103 may be sent to at least one analog-to-digital converter (ADC) 105 and the digitized output may be sent to at least one interference filter 106, which is configured to remove the effects of time-varying environmental interference 140 from the signal output of the detector 103." Ex.1005, [0107]. The output of the interference filter may be further processed by a signal extraction filter 107 "to extract accurate information from the medium 130" and produce an "extracted energy response signal" 109. Ex.1005, [0107]. "At least one signal processor (not shown) may be used to control the operations of the energy emitter 102, detector 103, filter 106 and/or

other components of the interference filtering method 100." Ex.1005, [0107]. The processor processes the detected energy response signal to produce an output signal. Ex.1005, [0007]. This processed output signal can be wirelessly transmitted to a remote device such as a cellphone. Ex.1005, [0035], [0104].

Valencell-093 further describes that the physiological sensor can be incorporated into an earbud. Ex.1005, Figs. 4-5, 9-17. The earbud sensor shown in Figure 14, for example, has one or more optical emitters 102 and two optical detectors each covered by a lens 715. Ex.1005, Fig. 14 (annotated), [0130].

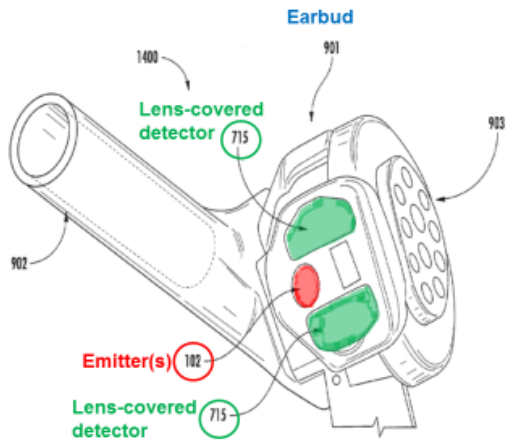

FIG. 14

Valencell-093 also teaches that the physiological sensor can be incorporated into a wristband or configured for application to other parts of a user. Ex.1005, Figs. 23-29, [0043], [0050].

2. Overview of Valencell-099

Valencell-099 was filed on February 22, 2010 and published on August 26, 2010. It is prior art under 35 U.S. § 102(a) (AIA).

Like Valencell-093, Valencell-099 describes a Bluetooth headset that includes a sensor for measuring physiological conditions such as blood metabolite level, blood oxygen level, protein levels and water content of blood, and cholesterol, among many others. Ex.1006, [0007], [0010], [0076]. The headset is part of a health and environmental monitoring system that can be used by doctors, dieticians, the user, and others for a variety of health and fitness related applications based on data collected by the system. Ex.1006, [0110]-[0130]. The headset includes a sensor module, shown below as element 21 of Fig. 2, which can be an optical sensor. Ex.1006, [0095].

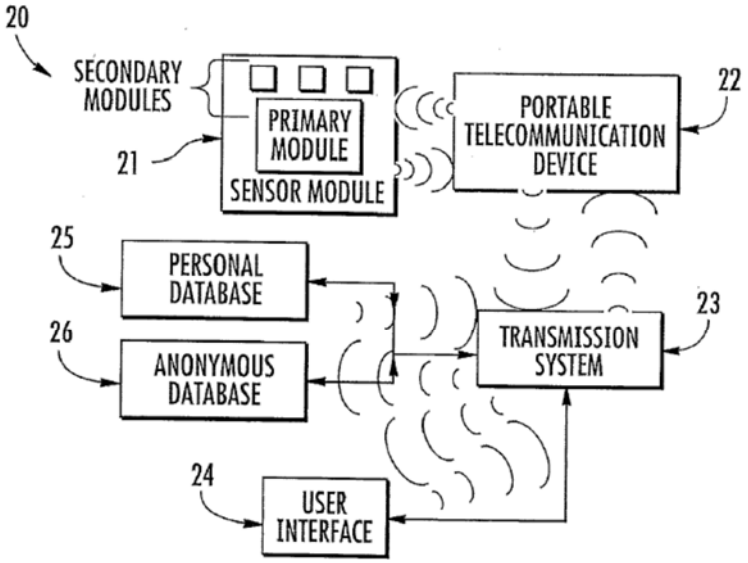

FIG. 2

Valencell-099 explains that the sensor module 21 communicates wirelessly with portable telecommunication device 22, which can be a smart phone, laptop computer, or other portable device. Ex.1006, [0096]. Valencell-099 further explains that the portable telecommunication device can store, analyze, summarize, and display data from the sensor. Ex.1006, [0097]. It also transmits the local wireless signal from the sensor over long distances not attainable by the short range (Bluetooth) transmitter within the sensor. Ex.1006, [0096]. Using transmission system 23, the portable telecommunication device can wirelessly transmit information to remote databases 25 and 26 for storage, analysis and retrieval of data. Ex.1006, [0098].

3. A Skilled Person Would Have Considered Valencell-093 With Valencell-099

Before December of 2013, a skilled person would have considered the systems and devices described by Valencell-093 in conjunction with those in Valencell-099, as both describe a Bluetooth headset designed by Valencell to measure physiological conditions using a physiological sensor, and to collect and use data generated by this device to monitor health and other conditions. Ex.1003, ¶¶79-82. A skilled person reading either reference would have naturally considered other Valencell references describing the same device to understand its operational aspects, as well as its applications and uses. Ex.1003, ¶83.

Both Valencell references identify the same objective of meeting a "growing market demand for personal health and environmental monitors," while describing complementary aspects of a device and system that meet this objective. Ex.1005, [0003]; Ex.1006, [0003]; Ex.1003, ¶84. Valencell-093 focuses on "how to make a wearable monitor, such as an earbud monitor, that may provide accurate information on physiological conditions in the midst of environmental noise," while Valencell-099 focuses on describing improved ways to collect "health and environmental exposure statistics" of users "to direct healthcare resources to where they are most highly valued." Ex.1005, [0112]; Ex.1006, [0003].

Driven, *inter alia*, by general market trends and needs, a skilled person reading Valencell-093 would have looked to Valencell-099 for guidance on how its remote device could be used to store and analyze collected data. Ex.1003, ¶85. Valencell-093 identifies this application, stating that a "processed energy response signal [from the described sensor] is transmitted to a remote device, for example wirelessly transmitted." Ex.1005, [0035]. Valencell-093 also identifies the benefits of incorporating a physiological sensor into a Bluetooth headset, which was commonly known to wirelessly communicate with another device such as a cell phone. Ex.1005, [0104].

Valencell-093 does not describe how the cell phone or other remote device should be configured to process the signals received from the sensor. That precise

guidance, however, is provided by Valencell-099, which teaches that "[h]ealth and environmental information, sensed by the sensors [in an earpiece of a Bluetooth headset] is transmitted wirelessly, in real-time, to a recording device, capable of processing and organizing the data into meaningful displays, such as charts." Ex.1006, [0018]. Valencell-099 then describes a device and system shown in Figures 1 and 2 that includes a smart phone for receiving "data from a wearable sensor module 21" that can be "stored, analyzed, summarized, and displayed" by the smart phone. Ex.1006, [0097], Figs. 9-21. It also teaches that the smart phone "sends/receives wireless information directly to/from a transmission system 23 for transmission to a database … for storage, analysis, and retrieval of data." Ex.1006, [0098]. The databases can include "aggregated health and environmental data" from multiple users or "health and environmental data that is personalized" for each user. Ex.1006, [0099].

Likewise, the skilled person reading Valencell-099 would have looked to Valencell-093 for guidance on how to build an optical sensor that can be incorporated into its Bluetooth headset. Ex.1003, ¶84. Figures 1 and 2 of Valencell-099 show a monitoring device and system that includes physiological sensors 11 and sensor module 21. Ex.1006, Figs. 1, 2. Sensor 11 "can be any compact sensor for monitoring the physiological functioning of the body." Ex.1006, [0076]. Sensor module 21 can be a PPG sensor placed in or near an ear

of the user. Ex.1006, [0101]. Valencell-099 does not describe the specific structure or operation of sensor 11 or sensor module 21, but Valencell-093 provides this disclosure. Ex.1003, ¶84.

In addition, skilled artisans at the time recognized that building an optical health monitor that would meet the evolving demand for a small, wearable, wireless device presented many challenges and would turn to the prior art to find solutions for those challenges. *See, e.g.*, Ex.1005, [0003] ("traditional wearable health monitors cannot measure physiological information accurately in typical daily environments"); Ex.1003, ¶79. One challenge was that the information of interest generated by these devices must be extracted from a noisy signal. *Id*. This noise comes from many different sources, such as "environmental interference from sunlight, temperature changes, and motion-coupled environmental noise, [which] can present measurement artifacts on wearable health monitors." Ex.1005, [0003]. "These measurement artifacts can reduce sensor accuracy, generate false measurements, and prevent accurate health, fitness, and vital status monitoring." Ex.1005, [0003]. Valencell-093 teaches how to build a sensor that can mitigate the effects of noise, and a skilled artisan looking to build the device described by Valencell-099 would have incorporated the teachings of Valencell-093 in order to build a wearable, wireless device that can provide accurate data. Ex.1003, ¶¶84-85.

A skilled person looking to build a "personal and health environmental monitor" would therefore look to the complementary teachings of both references to build a wireless, wearable device that can collect accurate physiological information in the presence of noise and then communicate that information to other devices for storage and analysis. Ex.1003, ¶86. A skilled person would do that as part of the ordinary design process he or she follows to improve the operation of a device, particularly given the emphasis both references place on providing accurate health data. Ex.1003, ¶86.

To the extent Patent Owner argues that Valencell-093 and -099 do not describe precisely the same Valencell device, the two references would have nonetheless been considered because they describe analogous devices and applications of it. Ex.1003, ¶¶82-83. Specifically, both Valencell references are in the field of optical sensing technology thereby describing analogous systems with common applications and utility. Ex. 1005, [0109] (an earpiece module using pulse oximetry by monitoring visible and IR light absorption); Ex. 1006, [0147] (same). In addition, both Valencell references are directed toward the same problem facing the inventor of the '533 Patent: a low-cost optical sensor. Ex.1001, 28:43-46 (explaining cost would be desired characteristic of the measurement system); Ex. 1005, [0104] ("Bluetooth headsets are cost effective…"); Ex. 1006, [0182] ("Health and environmental monitors, according to embodiments of the

present invention, enable a low-cost, real-time personal health …monitoring of various health factors.”).

The skilled person would have considered these analogous references together when implementing a system based on these teachings. Moreover, as explained in § III.B, above, by 2012, there was a general trend in the industry to create wearable devices that can be used in mobile monitoring situations or for sports and personal fitness applications. Thus, the skilled person would have had reason to look to references describing analogous devices with similar applications when considering how to create or improve wearable devices for these mobile health and consumer applications. Ex.1003, ¶86

The skilled person also would have been motivated to include specific features from Valencell-099 in the system of Valencell-093, for the reasons set forth below.

4. Independent Claim 13

Valencell-093 describes sensors that closely parallel the optical components of the system described by Claim 13. Valencell-099 describes how a personal device such as a smart phone or tablet can receive and process data received from such a sensor. As shown below, claim 13 would have been obvious based on this combination.

a) Preamble

The preamble of claim 13 specifies "*a measurement system*." Valencell-093 likewise describes a measurement system for measuring physiological characteristics of a user. Ex.1003, Fig. 1, [0003] (personal health and environmental monitor measures physiological characteristics of a user and then communicates that information to a remote device such as a cell phone), [0035], [0104]; Ex.1003, ¶89.

b) "a wearable measurement device for measuring one or more physiological parameters"

Valencell-093 teaches a wearable Bluetooth headset that incorporates a physiological sensor into an earbud. Ex.1005, Figs. 4-5, 9-17 [0006] ("a wearable monitoring apparatus"), [0104] ("Wireless, Bluetooth®-enabled…communication headsets"), [0112]. Valencell-093 also describes incorporating the sensor into a wearable wristband. Ex.1005, Figs. 23-29, [0151]-[0154]. The sensor measures "*physiological parameters*" of the user. Ex.1005, Figs. 1, 2, 4A, 4B, 5, 7-17, [0006] (e.g., heart rate, pulse pressure…, blood metabolite level, blood oxygen level"), [0050], [0108]-[0109]. Accordingly, Valencell-093 discloses "*a wearable measurement device for measuring one or more physiological parameters*." Ex.1003, ¶90.

(1) "including a light source comprising a plurality of semiconductor sources that are light emitting diodes"

Valencell-093 discloses that the headset includes a wearable sensor module, shown in Figure 1(annotated), having emitter(s) 102:

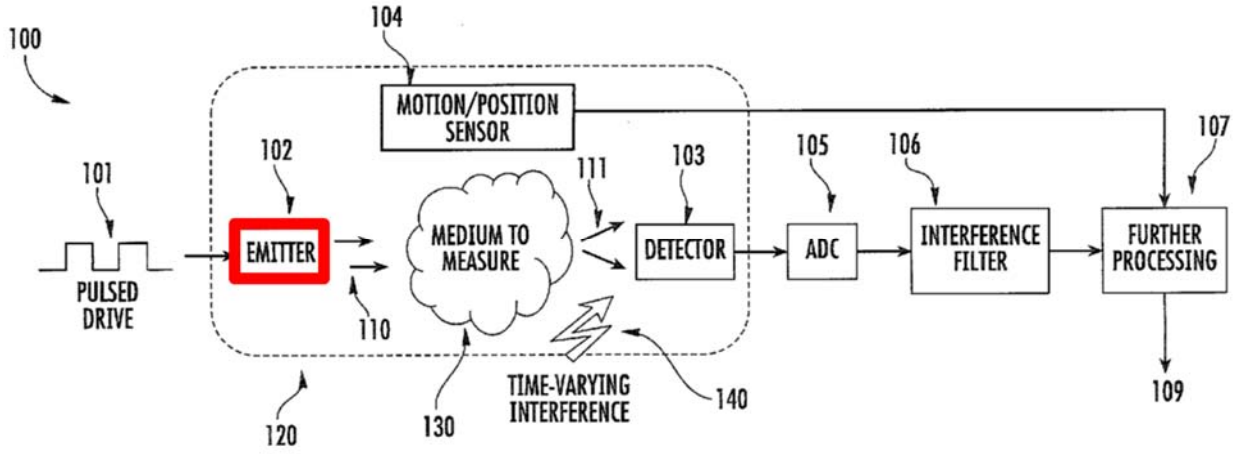

One or more LED emitters can be used. Ex.1005, [0038], [0108] ("Examples of optical emitters include light-emitting diodes (LEDs)"). A skilled person would have recognized that Valencell's LED emitters are "*semiconductor sources*." Ex. 1003, ¶91.

(2) "the light emitting diodes configured to generate an output optical beam with one or more optical wavelengths"

Valencell-093 teaches that the LED emitter emits a "beam of light" and "directs energy (e.g., optical energy… etc.) at a target region of the subject."[8] Ex.1005, [0006], [0009], [0012], [0019], [0033], [0044], [0047], [0109], [0137]. As "beam" is being used in Valencell-093, it is referring to light that is directed to a particular location in space (the target region of the subject) and is therefore the same type of "beam" described in the '533 Patent. Ex.1003, ¶93. Valencell-093 thus teaches an LED that emits a beam comprised of photons or light transmitted to a particular location in space. Ex.1003, ¶93.

Valencell-093 also teaches that the optical beam can be comprised of one or more optical wavelengths. Ex.1005, Fig. 2 (110), [0109] ("one or more optical sources emitting *one or more optical wavelengths*"), [0114], [0130] ("[m]ultiple wavelengths may be generated"); Ex.1003, ¶94.

(3) "wherein at least a portion of the one or more optical wavelengths is a near-infrared

---

[8] This disclosure also meets the definition of "beam" proposed by Omni in the related district court litigation. Ex.1003, ¶93.

wavelength between 700 nanometers and 2500 nanometers"

As just described, Valencell-093 teaches using multiple emitters to generate multiple wavelengths. Ex.1005, [0109], [0114], [0130]. Valencell-093 also describes an embodiment where "the optical emitter 102 is configured to emit wavelengths centered around 930 nm." Ex.1005, [0117]. An LED with a wavelength centered around 930 nanometers emits a near-infrared wavelength of light as described by this claim limitation. Ex.1003, ¶96. Thus, Valencell-093 describes a plurality of LEDs producing a beam with one or more wavelengths of light, "*wherein at least a portion of the one or more optical wavelengths is a near-infrared wavelength between 700 nanometers and 2500 nanometers*." *Id*.

(4) "the light source configured to increase signal-to-noise ratio by increasing a light intensity from at least one of the plurality of semiconductor sources"

Valencell-093 teaches that "the *intensity* of the optical emitter 102 may be increased to increase the ratio of physiological optical scatter 111 from blood vessels with respect to unwanted sunlight." Ex.1005, [0123], [0117] (emphasis added). The LED emitter is controlled by a processor such that it is configured to operate as described. Ex.1005, [0007], [0107], [0108].

Valencell-093 explains that "physiological optical scatter 111 from blood vessels" is comprised of light from the input optical beam reflected from the user's

tissue. Ex.1005, [0107], [0108]. Valencell also states that unwanted sunlight is noise. Ex.1005, [0112], [0145]. A skilled person would have understood that the ratio of optical scatter 111 to unwanted sunlight is a "*signal-to-noise ratio*" and that increasing the intensity of the intensity of one of the emitters would increase this signal-to-noise ratio. Ex.1003, ¶99. As Dr. Anthony explains, the signal-to-noise ratio is calculated by dividing the signal power by the noise power: $\frac{S}{N}$. *Id*. Increasing the signal power would necessarily increase the signal-to-noise ratio. *Id*. Valencell-093 therefore teaches increasing the light intensity of at least one of the LEDs to increase a signal-to-noise ratio. *Id*.

(5) "and by increasing a pulse rate of at least one of the plurality of semiconductor sources;"

Valencell-093 teaches that the LED emitter produces a pulsed beam of light that "may be pulsed completely on or completely off, or it may be pulsed partially on or partially off." Ex.1005, [0137], [0143]. Valencell teaches that the emitters have a pulse rate equal to the number of pulses per unit of time, also called an "emitter pulsing frequency." Ex.1005, [0139]; Ex.1003, ¶103. The pulse rate is controlled by the sensor's processor, such that "*the light source [is] configured to"* operate as claimed. Ex.1005, [0007] ("at least one processor controls operations of the energy emitter"), [0107] ("at least one signal processor…may be used to control the operations of the energy emitter") [0108]; Ex.1003, ¶103.

Valencell-093 explains that the pulse rate of these emitters should be selected based on the frequency of ambient noise, such as sunlight or the user running through alternating shadows. Ex.1005, [0139], [0140]. Given the conditions presented, "choosing a [pulsing] frequency that is too low may result in unsatisfactory subtraction" of the environmental noise by an interference filter. Ex.1005, [0139]. In other words, the processor will either increase or decrease the pulse rate depending on the environmental conditions. Ex. 1003, ¶104.

In the case of sunlight, Valencell-093 recommends that "the Nyquist criteria for pulsing the emitter may be $2\times f_{max}$, where f_{max} is the maximum heart rate of interest, which is … 3.3 Hz." Ex.1005, [0139]. But when the user is running through alternating shadows, Valencell-093 explains that the noise frequency may be greater than 10Hz. Ex.1005, [0140]. Valencell-093 therefore recommends "select[ing] a sampling frequency greater than twice the sunlight interference frequency, which . . . would be greater than 20Hz." Ex.1005, [0140].

While this refers to increasing a sampling frequency, a skilled person would have understood that there would be a corresponding increase in the pulse rate of the emitters, because Valencell-093 teaches that emitter pulsing frequency is correlated to the sample rate. Ex.1003, ¶106; Ex.1005, [0139] ("emitter pulsing frequency and sampling approach"), [0144] ("("Pulsing an emitter (e.g., 102, FIG. 1) and selectively sampling on/off signals"). A skilled person would have

understood that Valencell-093 is recommending increasing a pulse rate of the emitter relative to an initial intensity when the user encounters noisy conditions, such as when the user is running through alternating areas of shade and sunlight. Otherwise, the emitter pulse rate is "too low" to remove the noise caused by the user moving through varying light conditions. Ex.1003, ¶106. Accordingly, Valencell teaches that the processor "*increas[es] a pulse rate of at least one of the plurality of semiconductor sources.*" *Id*.

A skilled person also would have understood that removing noise caused by sunlight or movement from a detected signal increases a signal-to-noise ratio. Ex.1003, ¶107. The signal-to-noise ratio is calculated by dividing the signal power by the noise power: $\frac{S}{N}$. *Id*. Reducing or removing the noise power from this equation necessarily increases the signal-to-noise ratio. *Id*.

Valencell-093 therefore teaches a "*light source configured to increase signal-to-noise ratio…by increasing a pulse rate of at least one*" of the LED emitters. Ex.1003, ¶¶100-108.

c) "the wearable measurement device comprising a plurality of lenses configured to receive a portion of

the output optical beam and to deliver an analysis output beam to a sample;"

Valencell-093 discloses that the sensor can include a plurality of lenses for focusing light from the emitters onto the user's tissue. One such lens is shown in Figure 7 (annotated):

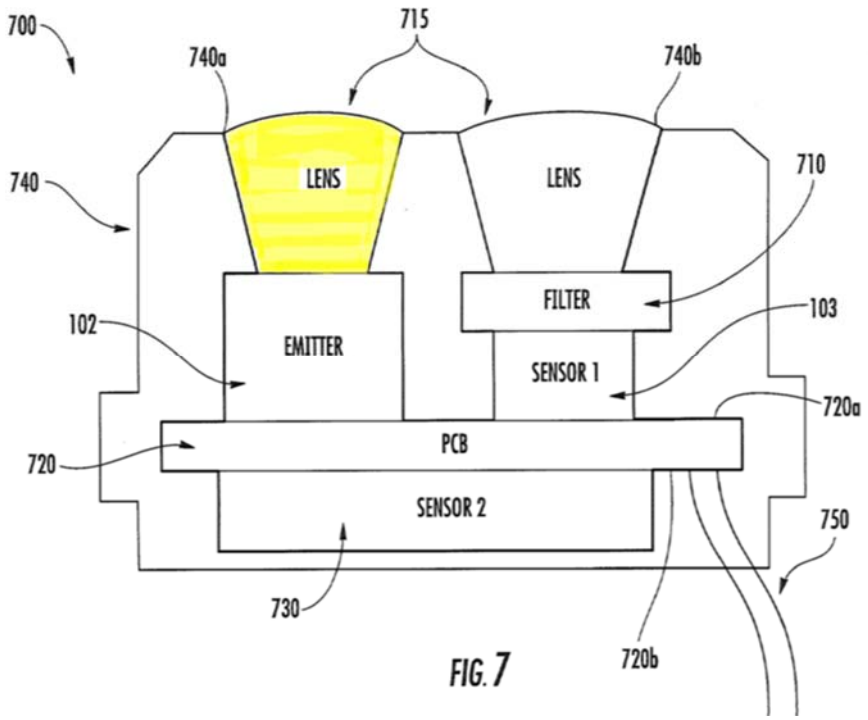

FIG. 7

Ex.1005, Figs. 7 (715), [0016] ("the sensor module includes a lens positioned above at least one of the optical emitter and filter"), [0131] ("lenses…may cover each separate emitter 102 and detector 103"), [0135] ("lens…may be placed over the emitters"). Each lens is used to "guide light from the optical emitter 102 ("*configured to receive a portion of the output optical beam*") towards skin 130 of a subject" ("*deliver an analysis output beam to a sample*"). Ex.1005, [0108]; *see also* [0017] (lens "is in optical communication with the optical emitter"), [0117]

(lens "focuses light emitted by the optical emitter"), Fig. 7 (showing lens in contact with emitter). The disclosed lenses are transparent and can focus or collimate light. Ex.1003, ¶110; Ex.1005, [0118], [0119], [0125], [0128].[9] Valencell-093 therefore teaches a plurality of transparent surfaces used to collimate (make parallel) or focus rays of light. Ex.1003, ¶110.

d) "the wearable measurement device further comprising a receiver configured to receive and process at least a portion of the analysis output beam reflected or transmitted from the sample and to generate an output signal"

The earbud sensor includes a "*receiver*" comprising one or more optical detectors, one or more analog-to-digital converters, and a processor. Ex.1003, ¶113.

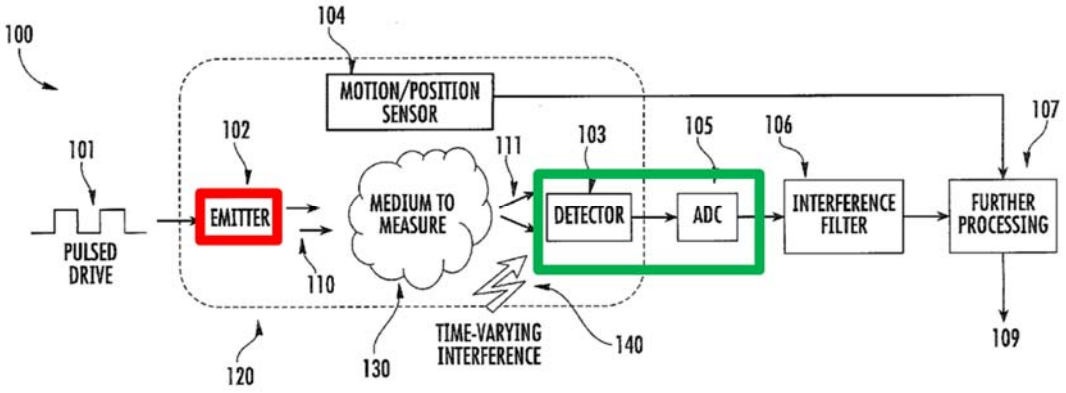

[9] This disclosure also meets the definitions of lens proposed by Omni and by the court in the related district court litigation. Ex.1003, ¶111.

Ex.1005, Figs. 1, 2, 7-17, 18, [0007], [0009], [00111],[0038], [0107], [0137],

Valencell-093 teaches that the optical detector(s) are "configured to detect energy…in the form of optical energy scattered from the medium 130," such as the tissue of a user's ear. Ex.1005, [0107]. The tissue of the ear scatters light from the LEDs delivered to the tissue by the lenses. Ex.1005, Fig. 2 (111), [0109]. The reflected light is received by the detectors ("*receive…at least a portion of the analysis output beam reflected or transmitted from the sample*"); Ex.1003, ¶113. Ex.1005, Fig. 2, [0108], [0109], [0137].

The processor "is configured to process the detected energy response signal ("*process at least a portion of the analysis output beam*") and produce an extracted energy response signal." Ex.1005, [0007], Fig. 1 (109), Ex.1003, ¶114. The extracted energy response signal represents a "desired physiological signal" or property, such as heart rate, that is output from the earbud ("*generate an output signal*"). Ex.1005, [0107] ("the desired signal (the extracted energy response signal) 109"), [0148] ("a desired physiological signal (e.g., 109, FIG. 1)"), [0149] ("processed heart rate signal output 109 of an earbud module"), Ex.1003, ¶114.

e) "wherein the wearable measurement device receiver is configured to be synchronized to pulses of the light source"

The "*receiver*" includes one or more ADCs for digitizing signals from the detectors. Ex.1005, Fig. 1 (105), [0011]. Valencell-093 teaches that the sample

rate of the receiver's ADCs is synchronized to the pulse rate of the emitters. Ex.1003, ¶116. Ex.1005, Figs. 18, 19A, 19B (showing digital sampling of a signal), [0137] ("A pulsed emitter (e.g., 102, FIG. 1) generates a pulsed beam of light such that some samples 1920 represent signal 1911 from a detector with the emitter turned off and other samples 1930 represent signal 1911 from the detector with the emitter turned on"), [0144] ("Pulsing an emitter (e.g., 102, FIG. 1) and selectively sampling on/off signals"). As shown in Figure 18, at least one ADC sample is read when the emitters are on and then at least one ADC sample is read when the emitters are off.

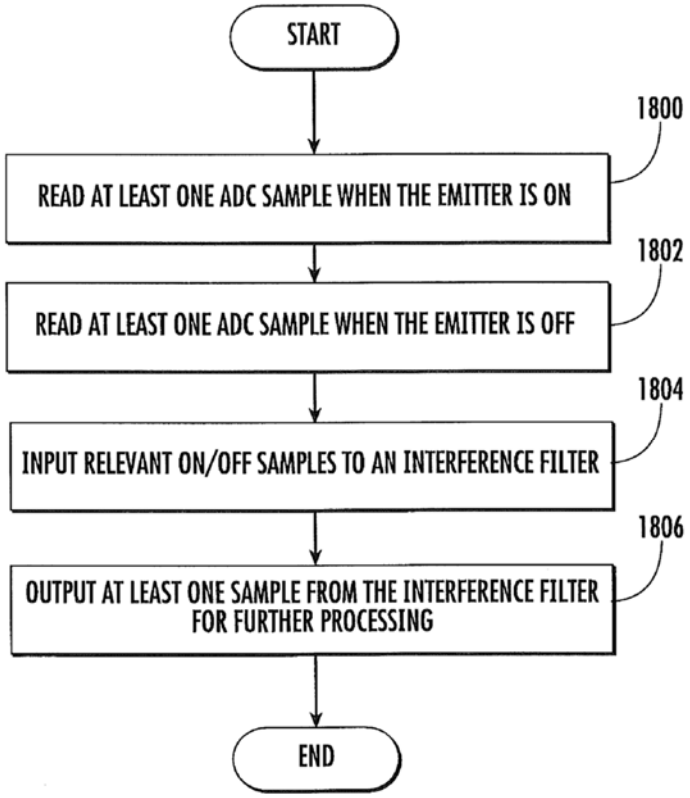

FIG. 18

Ex.1005, Fig. 18, [0137]. The operations of the modulated LED emitter and the receiver, comprised of one or more detectors and ADCs, is therefore synchronized. Ex.1003, ¶117.

f) "a personal device comprising a wireless receiver, a wireless transmitter, a display, a microphone, a speaker, one or more buttons or knobs, a microprocessor and a touch screen,"

Valencell-093 teaches that a processed energy response signal from an earbud sensor is wirelessly transmitted to a mobile device such as a cell phone. Ex.1005, [0035], [0104]. Valencell-099 teaches that this mobile device, which it calls a portable telecommunications device 22, "can be any portable device, such as a cell phone (which includes a 'smartphone'), PDA, laptop computer, Blackberry, another earpiece, or other portable, telemetric device."). Ex.1006, [0018], [0096]. It was well known at the time that a smart phone, for example, included a wireless receiver, a wireless transmitter, a display, a microphone, a speaker, a microprocessor, and a touch screen. Ex.1003, ¶119.

Valencell-099 also discloses these conventional features as part of the portable telecommunication device 22. For example, the portable telecommunications device has a wireless receiver and wireless transmitter. Ex.1006, Fig. 2, [0096]-[0098]. As shown in Figure 9 (annotated), the portable telecommunication device 22 has a display, a microphone, one or more buttons, a speaker, and screen:

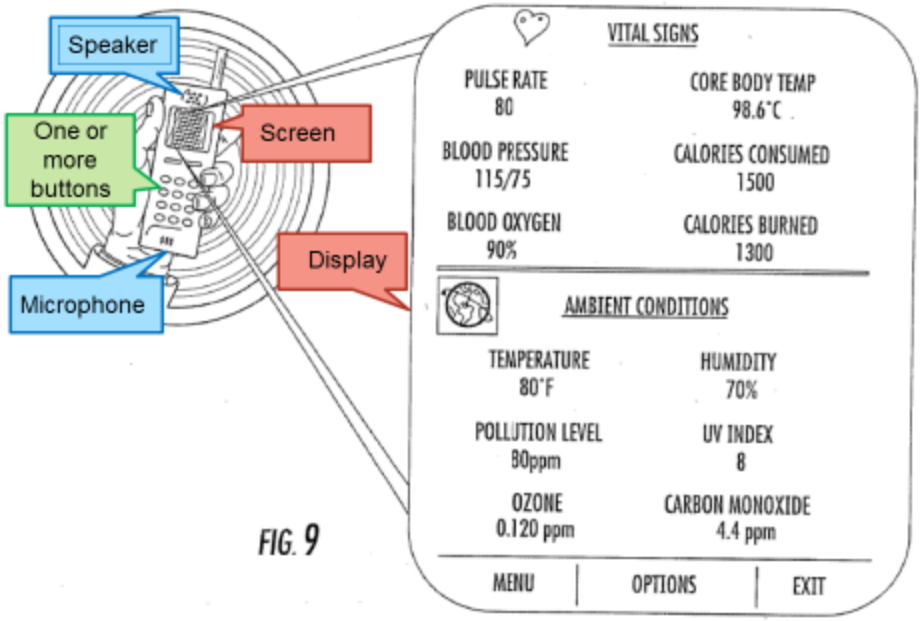

FIG. 9

In addition, a skilled person would have recognized that the portable telecommunications device (such as a smart phone) necessarily has a processor. Ex.1003, ¶123.

Should Patent Owner contend that Valencell-099 does not explicitly describe the disclosed screen as being a touch screen, a skilled person would have considered a touch screen to be an obvious choice for this screen. Ex.1003, ¶124. Valencell-099 describes a user interacting with handheld devices to view and manipulate the information obtained from the remote sensor. *See, e.g.*, Ex.1006, Figs. 9, 10. The logical and known options for handheld devices were smart phones and tablets with user interfaces that incorporate touch screens. Ex.1003, ¶139. A skilled person reading Valencell-099 also would have immediately

envisaged a touch screen as one of a small number of known types of screens suitable for the types of described user devices. Ex.1003, ¶124. *See Kennametal, Inc. v. Ingersoll Cutting Tool Co.,* 780 F.3d 1376, 1381 (Fed. Cir. 2015); *In re Petering*, 301 F.2d at 681.

Similarly, should Patent Owner contend that Valencell-099 does not explicitly describe the use of knobs, they would have been considered an obvious and well-known alternative to buttons. Ex.1003, ¶125. *See Kennametal, Inc.,* 780 F.3d at 1381; *In re Petering*, 301 F.2d at 681. Buttons and knobs are two of a small number of known physical components that can be incorporated into a user interface of a device that enables a user to interact with physiological data, as contemplated by Valencell-099. Ex.1003, ¶125.

(1) "the personal device configured to receive and process at least a portion of the output signal,"

Valencell-093 and Valencell-099 each teach a wearable measurement device that generates an output signal—physiological signal 109 and wireless data signal 19, respectively. Both also teach wirelessly transmitting these signals to a personal device such as a smart phone. Ex.1005, [0035], [0096], [0104], [0110]; Ex.1006, [0018], [0083]-[0086], [0096], [0124].

Valencell-099 provides further descriptions of how the personal device is "*configured to receive at least a portion of*" the transmitted output signal from a wearable measurement device. Ex.1003, ¶¶126-128. As Valencell-099 explains,

the personal communication device 22 receives output signal 19 transmitted by sensor module 21:

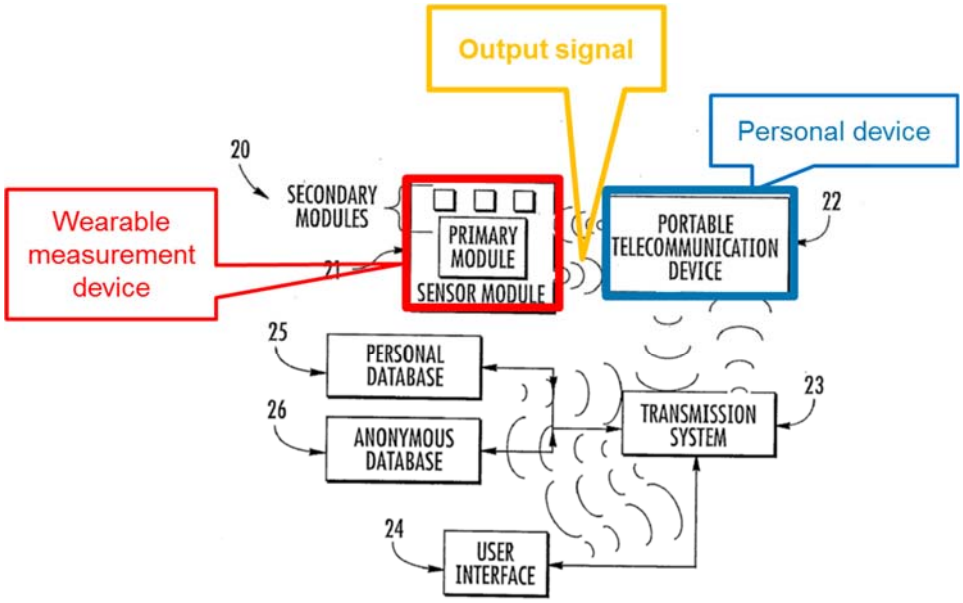

FIG. 2

Ex.1006, Fig. 2 (annotated), [0094]. Valencell-099 further teaches that "[t]he portable telecommunication device 22 and the wearable sensor module 21 can telemetrically communicate both to and from each other." Ex.1006, [0096], [0014], [0018], Fig. 2 (indicating two-way wireless communication); Ex.1003, ¶127.

Valencell-099 further teaches that the portable telecommunication device 22 is configured to receive ***and process*** the output signal 19. For example, "[i]n one embodiment, raw or preprocessed data from the sensor module 10, 21 is transmitted wirelessly to the telecommunication device 22, and this device

executes various algorithms to convert the raw sensor data (from one or more sensors) into a meaningful assessment for the user." Ex.1006, [0124], [0014] ("receiving …and analyzing the received information"), (information "may undergo virtually any type of analysis" by a remote device), [0018] (sensor wirelessly transmits data to a remote device "capable of processing and organizing the data into meaningful displays, such as charts."); Ex.1003, ¶128

The combination of Valencell references therefore teaches a wearable measurement device (as described by Valencell-093) configured to communicate with a personal device that can receive and process an output signal from the wearable measurement device (as described by Valencell-099).

(2) "wherein the personal device is configured to store and display the processed output signal"

Valencell-099 explains that

> The portable telecommunication device 22 may also contain an end-user graphical interface, such as a user interface 24 in the monitoring system 20, such that data from the wearable sensor module 21 can be ***stored, analyzed, summarized, and displayed on the portable telecommunication device 22***. For example, charts relating health and environment, as well as real-time biofeedback and the like, can be displayed on a cell phone, media player, PDA, laptop, or other device."

Ex.1006, [0097] (emphasis added), [0107], Fig. 9 (mobile device displaying processed data). In addition, a "data storage component" included in the portable

telecommunication device 22 "allows ***processed signal data to be stored***, analyzed and manipulated." Ex.1006, [0108] (emphasis added); Ex.1003, ¶130.

Valencell-093 in combination with Valencell-099 therefore teaches a wearable measurement device configured to communicate with a personal device that can "*store and display the processed output signal.*"

(3) "and wherein at least a portion of the processed output signal is configured to be transmitted over a wireless transmission link;"

Figure 2 of Valencell-099 describes a portable telecommunication device 22 that can wirelessly communicate with other devices via transmission system 23. This wireless transmission system, corresponding to the claimed "*wireless transmission link*" shown below.

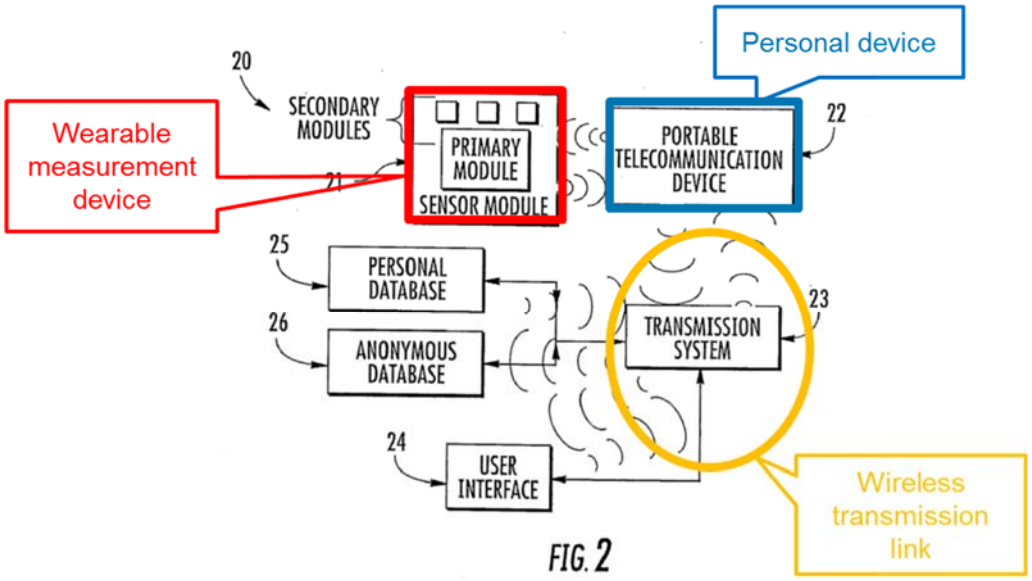

Ex.1006, Fig. 2 (annotated), [0098] ("The portable telecommunication device 22 sends/receives wireless information directly to/from a transmission system"). The

transmission system 23 is a *wireless transmission link* such as the Internet or "reception tower and routed through a base station." Ex.1006, [0098], Ex.1003, ¶132.

The information transmitted over the wireless transmission system 23 to other devices such as databases 25, 26 or user interface 24 can include *at least a portion of the processed output signal* generated by personal telecommunication device 22, per claim limitation 13(f)(2) above. Ex.1006, [0096] ("portable telecommunication device … transmit[s] the local wireless signal from the sensor module 21 over longer distances unattainable by the transmitter 14 of the sensor module 21), [0099] (databases store health data from multiple wearable sensor devices), [0100] (user interface displays health data), Figs. 10-21 (providing additional display examples). Ex.1003, ¶133.

Valencell-093 in combination with Valencell-099 therefore teaches a wearable measurement device configured to communicate with a personal device that generates a processed output signal, "*wherein at least a portion of the processed output signal is configured to be transmitted over a wireless transmission link*."

g) "and a remote device configured to receive over the wireless transmission link an output status

comprising the at least a portion of the processed output signal,"

Valencell-099 teaches that the "*wireless transmission link*" 23 wirelessly communicates with one or more databases 25 and 26, each corresponding to a "*remote device*," shown below:

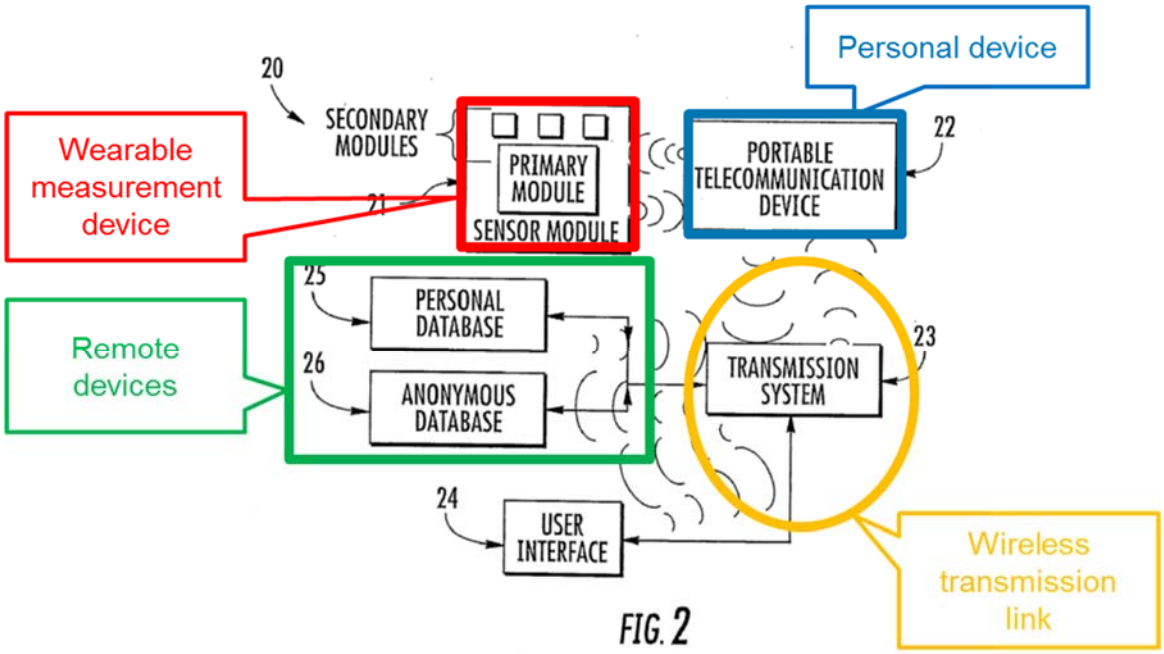

Ex.1006, Fig. 2 (annotated); Ex.1003, ¶135. As explained by Valencell-099, "[t]he portable telecommunication device 22 sends/receives wireless information directly to/from a transmission system 23 for transmission to a database (such as personal database 25 and/or anonymous database 26) for storage, analysis, and retrieval of data." Ex.1006, [0098]. The user interface device 24 which "can be a computer monitor, a cellphone monitor…or any method of visual display," is used to access the databases through the wireless transmission link. Ex.1006, [0098], [0100].

The external personal database stores "health and environmental data that is personalized for each monitoring device user," whereas the anonymous database contains "aggregated health and environmental data from multiple indistinct monitoring device users." Ex.1006, [0099]. The databases, including the devices where they reside, are therefore each a "*remote device configured to receive over the wireless transmission link an output status comprising the at least a portion of the processed output signal*." Ex.1003, ¶136.

(1) "[the remote device configured] to process the received output status to generate processed data and to store the processed data,"

Valencell-099 explains that the databases are used "for storage, analysis, and retrieval of data" received through the wireless transmission link. Ex.1006, [0098]. Valencell-099 therefore teaches that the remote devices that store the databases are configured to "*process the received output status to generate processed data and to store the processed data.*" Ex.1003, ¶138. Figures 3 and 10 show examples of "*processed data*" generated and stored by these databases and displayed by a user device 24. Ex.1006, [0100], Ex.1003, ¶¶139-140.

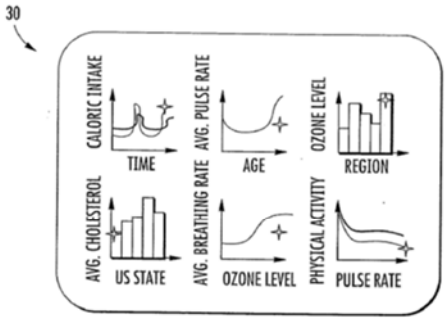

FIG. 3

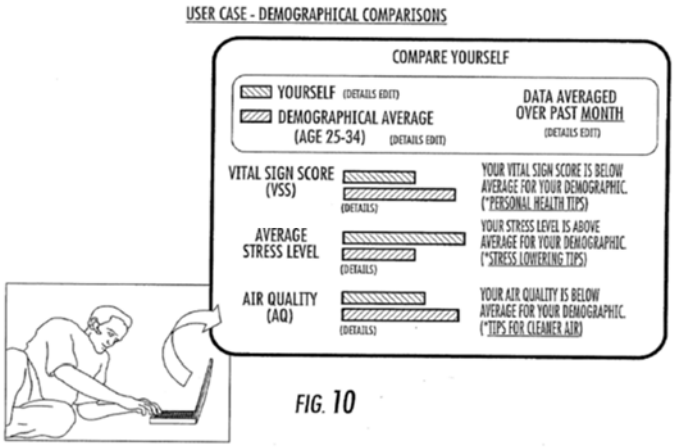

FIG. 10

Figure 3 provides an example "of how a computer monitor may appear to a user logging-in to their personal database 25 and comparing their own personal data with that of anonymous users in the same monitoring system 20." Ex.1006, [0100]; Ex.1003, ¶139. Figure 10 likewise shows "an exemplary user interface that a user can access to compare himself/herself to others." Ex.1006, [0101]; Ex.1003, ¶140. These figures show individual data such as pulse rate and other vital signs, sourced from the user's wearable monitoring device, that has been processed in order to generate: a comparison to aggregated data from other users, an average over time, or a "vital sign score," for example. Ex.1006, [0101]; Ex.1003, ¶140. Valencell-099 therefore teaches a remote device configured to "*process the received output status to generate processed data and to store the processed data.*"

(2) "and wherein the remote device is capable of storing a history of at least a portion of the

received output status over a specified period of time."

Valencell-099 teaches that data is transmitted to the databases "for processing and organizing the data into meaningful displays, such as charts. In some embodiments a [user] … may also access records of ***collected data throughout the day, week, month***, etc." Ex.1006, [0018]. These records correspond to a "*history of at least a portion of the received output status over a specified period of time*" such as a day, week, or month. Ex.1003, ¶142. Figure 10 likewise shows "data averaged over the past month," representing a history of output status information over a specified time period of a month. *Id*. Valencell-099 further explains that "physiological …information collected from the person over a period of time can be stored and subsequently analyzed." Ex.1006, [0110]. Figure 11, for example, shows "the display of stress over time." Ex.1006, [0110], [0127] ("user can track history of stress levels").

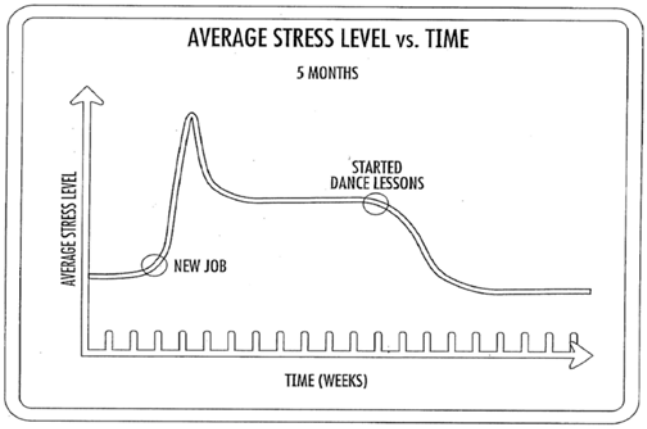

FIG. 11

Valencell-099 therefore teaches "*wherein the remote device is capable of storing a history of at least a portion of the received output status over a specified period of time*."

5. Independent Claim 5

a) Preamble

Valencell-093 teaches the preamble for the same reasons described above for Claim 13, element (a). Ex.1003, ¶148.

b) "a light source comprising a plurality of … light emitting diodes …"

Valencell-093 teaches this limitation for the same reasons described above for Claim 13, limitation (b)(1)-(3). Ex.1003, ¶149.

(1) "the light source configured to increase signal-to-noise ratio by increasing a light intensity from at least one of the plurality of semiconductor sources …."

Valencell-093 teaches this limitation for the same reasons described above for Claim 13, limitation (b)(4). Ex.1003, ¶150.

(2) "and by increasing a pulse rate of at least one of the plurality of semiconductor sources"

Valencell-093 teaches this limitation for the same reasons described above for Claim 13, limitation (b)(5). Ex.1003, ¶151.

c) "an apparatus comprising a plurality of lenses configured to receive a portion of the output optical

beam and to deliver an analysis output beam to a sample"

Valencell-093 teaches this limitation for the same reasons described above for Claim 13, limitation (c). Ex.1003, ¶152.

d) "a receiver configured to receive and process at least a portion of the analysis output beam reflected or transmitted from the sample and to generate an output signal,"

Valencell-093 teaches this limitation for the same reasons described above for Claim 13, limitation (d). Ex.1003, ¶153.

e) 'wherein the receiver is configured to be synchronized to pulses of the light source"

Valencell-093 teaches this limitation for the same reasons described above for Claim 13, limitation (e). Ex.1003, ¶154.

f) "a personal device comprising a wireless receiver, a wireless transmitter, a display, a microphone, a speaker, one or more buttons or knobs, a microprocessor and a touch screen"

As combined above, the combination of Valencell-093 and -099 teaches this limitation for the same reasons described above for Claim 13, limitation (f). Ex.1003, ¶155.

(1) "the personal device configured to receive and process at least a portion of the output signal"

As combined above, the combination of Valencell-093 and -099 teaches this limitation for the same reasons described above for Claim 13, limitations (f)(1). Ex.1003, ¶156.

(2) wherein the personal device is configured to store and display the processed output signal"

As combined above, the combination of Valencell-093 and -099 teaches this limitation for the same reasons described above for Claim 13, limitations (f)(2). Ex.1003, ¶156.

(3) "and wherein at least a portion of the processed output signal is configured to be transmitted over a wireless transmission link"

As combined above, the combination of Valencell-093 and -099 teaches this limitation for the same reasons described above for Claim 13, limitation (f)(3). Ex.1003, ¶157.

g) "a remote device configured to receive over the wireless transmission link an output status comprising the at least a portion of the processed output signal,"

As combined above, the combination of Valencell-093 and -099 teaches this limitation for the same reasons described above for Claim 13, limitation (g). Ex.1003, ¶158.

(1) "to process the received output status to generate processed data and to store the processed data."

As combined above, the combination of Valencell-093 and -099 teaches this limitation for the same reasons described above for Claim 13, limitation (g)(1). Ex.1003, ¶159.

6. Comparison of Dependent Claims to Valencell-093 and Valencell-099

a) Dependent Claims 7 and 15

Claims 7 and 15 depend from claims 5 and 13, respectively, and specify "*wherein the remote device is further configured to transmit at least a portion of the processed data to one or more other locations, wherein the one or more other locations is selected from the group consisting of the personal device, a doctor, a healthcare provider, a cloud-based server and one or more designated recipients, and wherein the remote device is capable of transmitting information related to a time and a position associated with the at least a portion of the processed data.*"

Valencell-099 teaches that the databases are remotely located and can be accessed by user interface 24 through the wireless transmission link 23. Ex.1006, [0098], [0100]. The user interface device 24 "can be a computer monitor, a cellphone monitor…or any method of visual display." Ex.1006, [0100]. The remote devices on which the databases reside are therefore "*configured to transmit*

at least a portion of the processed data to one or more other locations" corresponding to devices having a user interface 24. Ex.1003, ¶162.

Valencell-099 further explains that the databases are "accessible through the Internet," Ex.1006, [0099], can be used by "a doctor [to] monitor the health of patients through each patient's personalized database," Ex.1006, [0103], and that the databases can be used by healthcare providers such as dieticians and researchers monitoring a clinical trial and/or designated recipients such as "athletic trainers…of athletes." Ex.1006, [0105], [0106]. Valencell-099 also explains that "the user can monitor his/her own diet, activity,…etc. through the monitoring system," and that the user can use a smart phone ("*personal device*") to do so. Ex.1006, [0105], [0100]. [0123]. Valencell-099 therefore teaches that "*one or more other locations is selected from the group consisting of the personal device, a doctor, a healthcare provider, a cloud-based server and one or more designated recipients.*" Ex.1003, ¶163.

Valencell-099 also explains that data stored by the anonymous database "can be processed into a map by correlating location information of each subject" with data from the wearable monitoring device. Ex.1006, [0134]. Figure 12 shows an example of a "real-time health/stress map" that includes location information that is updated every 15 minutes that can be viewed by user interface 24, which wirelessly receives the displayed information from the databases. Ex.1006, [0098],

[0100]. Figures 13, and 15-19 similarly show displays of user data measured over time. Valencell-099 therefore teaches "*wherein the remote device is capable of transmitting information related to a time and a position associated with the at least a portion of the processed data.*" Ex.1003, ¶164.

b) Dependent Claims 8 and 16

Claims 8 and 16 depend from claims 5 and 13, respectively, and specify "*wherein the receiver is located a first distance from a first one of the plurality of light emitting diodes and a different, second distance from a second one of the light emitting diodes such that the receiver receives a first signal from the first light emitting diode and a second signal from the second light emitting diode*."

Figure 9A of Valencell-093, annotated below, shows an earbud with two spatially separated sensor modules.[10]

---

[10] Annotations for the emitters and detectors have been added for clarity. Valencell-093 does not specify whether, in this figure, the emitter is located on the left or right side of each sensor relative to the detector. The annotations here are consistent with other figures of the patent, but other configurations are possible and would be similarly understood by a skilled person. Ex.1003, ¶167.

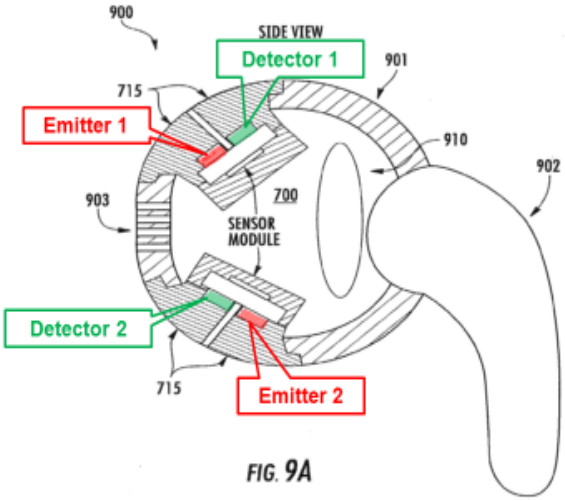

FIG. 9A

Ex.1005, Fig. 9A, [0122]. As shown, the "*receiver*" is comprised of at least Detector 1 and at least one ADC, as shown in the Fig. 1 block diagram. *See* §VI.A.4(d) (describing claimed receiver). Detector 1 is located a first distance from a first emitter (Emitter 1) and a second, different distance from a second emitter (Emitter 2). Ex.1005, Fig. 9A; Ex.1003, ¶168. In this configuration, Detector 1 can capture light from Emitter 1 as a *first signal* and light from Emitter 2 as a *second signal*. Ex.1003, ¶168.

Valencell-093 thus discloses claims 8 and 16, and the claims would have been obvious based on the combination of Valencell-093 and Valencell-099.

c) Dependent Claims 9 and 17

Claims 9 and 17 depend from claims 8 and 16, respectively, and specify "*wherein the output signal is generated in part by comparing the first and second signals*."

Valencell-093 teaches that the "*first*" and "*second*" signals are compared by averaging samples from each emitter and subtracting ambient light. Ex.1003, ¶171. Valencell-093 also teaches that it is beneficial to detect light reflected from different parts of the ear, which would result from having multiple emitters and detectors at different locations in the earbud, as shown in Figure 9A. Ex.1005, [0130]; Ex.1003, ¶172. The difference between two signals detected from two different regions of the ear can be compared using processing "to generate an assessment of pulse pressure, blood pressure, cardiac output, and the like" ("*wherein the output signal is generated in part by comparing the first and second*"). Ex.1005, [0130]; Ex.1003, ¶173. A skilled person would understand that this assessment represents at least in part a non-invasive measurement on blood contained within the tissue. Ex.1005, [0130] ("measuring blood constituents"), Ex.1003, ¶173.

Therefore, Valencell-093 teaches "*wherein the output signal is generated in part by comparing the first and second signals*."

d) Dependent Claim 10

Claim 10 depends from claim 5 and specifies "*wherein the output signal comprises one or more physiological parameters, and the remote device is capable of storing a history of at least a portion of the one or more physiological parameters over a specified period of time*."

Valencell-093 teaches that the "*output signal*" generated by the receiver "*comprises one or more physiological parameters"* for the reason reasons identified above for Claim 13, limitation (d). As described for that limitation, the "*output signal*" represents a "desired physiological signal" or property, such as heart rate, that is output from the earbud ("*generate an output signal*"). Ex.1005, [0107] ("the desired signal (the extracted energy response signal) 109"), [0148], [0149] ("processed heart rate signal output 109 of an earbud module"), Ex.1003, ¶176.

Valencell-093 in combination with Valencell-099 also teaches "*storing a history of at least a portion of the one or more physiological parameters over a specified period of time*" for the same reasons identified above for Claim 13, limitation (g)(2). Ex.1003, ¶¶177-179.

Claim 10 is therefore obvious based on the combination of Valencell-093 and -099.

B. <u>Ground 2</u>: Valencell-093 and Valencell-099 in view of Carlson Render Obvious Claims 5, 7-10, 13 and 15-17

Patent Owner may contend that Valencell-093 does not explicitly teach "*a light source configured to increase signal-to-noise ratio… by increasing a pulse rate of at least one of the plurality of semiconductor sources*," as recited by independent claims 5 and 13. This limitation is taught by Carlson, such that the contested claims are unpatentable based on Valencell-093 and Valencell-099 in view of Carlson.

1. Overview of Carlson

Carlson published on March 3, 2005, and is prior art under 35 U.S.C. § 102(a). Carlson describes a wearable pulse oximeter that can be worn on the ear, finger, toe or "other parts of the human body." Ex.1009, [0052], [0078]; Ex.1003, ¶181. The device uses a conventional sensor known in "the state of the art" that emits optical wavelengths in the red (*e.g.*, 660 nm) and infrared (*e.g.*, 800 to 1000 nm) ranges, and it detects light that has been transmitted or reflected. Ex.1009, [0003], [0050], [0052]. The device is mobile and can wirelessly transmit data to a doctor or hospital. Ex.1009, [0072], [0077]-[0078]; Ex.1003, ¶181.

Carlson describes techniques for "increasing the technical performance of pulsoximetry in terms of quality and robustness of the measurement signal versus environmental disturbances and energy consumption." Ex.1009, [0002]; *see also* Ex.1003, ¶182. Carlson notes that while known sensors can be used in

telemedicine, athletics, and other mobile applications, these standard sensors "suffer from signal instability and insufficient robustness versus environmental disturbances." Ex.1009, [0004]. Carlson therefore has the objective "to define optical and/or electronic means for increasing the Signal-to-Noise ratio (S/N)…of a pulsoximeter sensor for robust application of pulsoximetry in telemedicine and near patient testing applications in rough (optical) environmental conditions, e.g. at changing light influences, such as sunlight, shadow, artificial light, etc." Ex.1009, [0010]. These observations in Carlson provide a direct motivation to a skilled person to incorporate its techniques—including increasing the rate of LED pulses to improve a detected signal-to-noise ratio—features and other improvements into other pulsoximetry devices to similarly increase the signal-to-noise ratio and other signal characteristics of such devices. Ex. 1003, ¶184.

2. A Skilled Person Would Have Modified The Sensor of Valencell-093 to Incorporate Elements Shown in Carlson

As described in Ground 1, a skilled person would have known or found it obvious to increase emitter pulse rate, as taught by Valencell-093, in order to increase a signal-to-noise ratio. That person reading Valencell-093 would have looked to other references that disclosed additional techniques for improving the operation of an optical sensing systems. Ex.1003, ¶¶183-184. It was part of the ordinary design process to look for ways to improve the operation of a device by looking to complementary designs and techniques. *Id*. Indeed, the latter is a

specific objective of Valencell-093—"to teach how to make a wearable monitor… that may provide accurate information on physiological conditions ***in the midst of environmental noise, such as noise from ambient light and/or sunligh***t." Ex.1005, [0112], [0005].

Both references identify the same problem – ambient light – and the need to offset its negative impact on the signal-to-noise ratio. Ex.1003 ¶184; Ex.1005, [139]-[0140]; Ex.1009, [0067]-[0069]. The systems described in Valencell-093 also can readily be modified to incorporate the Carlson technique, given that Valencell-093 teaches that the pulse rate of the LEDs can be adjusted in response to changes in environmental conditions, such as changes in user movement or ambient light. Ex.1005, [0139]-[0140]. Consequently, a skilled person would have found it obvious to configure Valencell-093 to increase the pulse rate of LEDs as taught by Carlson, given that Carlson teaches that increasing the modulation frequency of the pulsed LEDs improves the signal-to-noise ratio, and could implement that change using only routine effort (e.g., adjusting the pulse rate of the LEDs in the manner envisioned by the Valencell references). Ex.1009, [0069]; Ex.1003, ¶184.

Moreover, as explained in §III.B, above, by 2012, there were trends in the industry to create wearable devices that could be used in mobile monitoring situations or for sports and personal fitness applications. These trends would have

provided additional reasons for a skilled person to consider references, like Carlson, which describe desirable features of wearable devices intended for use in these mobile health and consumer applications. Ex.1003, ¶185.

The Valencell references and Carlson are also analogous references, each describing techniques for improving the measurements taken by optical sensing devices, such as pulse oximeters. Ex.1003, ¶186; Ex. 1009, [0002]. Accordingly, the skilled person would have considered the references together when implementing a system based on the teachings of the Valencell references. Ex.1003, ¶186.

3. Independent Claims 5 and 13

As described in Ground 1, Valencell-093 teaches a "light source configured to improve signal-to-noise ratio…by increasing a pulse rate of at least one of the plurality of semiconductor sources," as recited in claims 5 and 13. Valencell-093 explains that the pulse rate of the LED emitters should be selected based on the frequency of ambient noise, such as sunlight or the user running through alternating shadows. Ex.1005, [0139], [0140]. Given the conditions presented, "choosing a [pulsing] frequency that is too low may result in unsatisfactory subtraction" of the environmental noise by an interference filter. Ex.1005, [0139].

Carlson teaches one such way of improving signal-to-noise ratios in the types of optical sensors used in Valencell-093, including to deal with the same

problems of ambient light identified in Valencell-093. Ex.1003, ¶188. As Carlson explains, pulsing the LEDs reduces the effects of ambient light including sunlight. Ex.1009, [0067]-[0069]. Carlson teaches that the pulse frequency ("*pulse rate*") is "chosen in such a way that it is outside the frequency spectrum of sunlight and ambient light" and it could be "1000 Hz" or "can be chosen at any other frequency, as e.g. 2000 Hz or even higher." Ex.1009, [0069]; Ex.1003, ¶188. Figure 8 of Carlson shows increasing the operating frequency F_0 of the LEDs as compared to Fig. 7c. Ex.1009, [0069]. This frequency shift, which corresponds to increasing the "*pulse rate*" of the emitter, increases "significantly the Signal-to-Noise and Signal-to-Background ratio." Ex.1009, [0069]; Ex.1003, ¶188.

A skilled person would have been motivated to incorporate Carlson's technique of increasing a pulse rate into the sensor of Valencell-093 in order to increase the signal to noise ratio, as explained by Carlson. Ex.1009, [0069]; Ex.1003, ¶189. The skilled person also would have recognized that incorporating the technique described by Carlson into the Valencell-093 sensor would involve combining familiar elements according to known methods, yielding predictable results. Ex.1003, ¶190. As both Carlson and Valencell-093 demonstrate, varying pulse rate of the emitters was a known technique commonly used with optical sensors. Ex.1005, [0139], [0140]; Ex.1009, [0069]; Ex.1003, ¶190. Indeed, the '533 specification provides little explanation of this technique, presumably because

it was well known at the time. *See* Ex.1001, 5:11-15, 5:43-47. A skilled person would have been able to reasonably predict that the effect of incorporating this known technique into the Valencell-093 device would be to improve a signal-to-noise ratio. Ex.1003, ¶190.

4. Dependent Claims 7-10, and 15-17

Dependent claims 7-10, and 15-17 would have been obvious based on the combination of the Valencell references with Carlson as explained above in Ground 1 with respect to the combination of Valencell-093 and -099. Ex.1003, ¶191.

C. Ground 3: Valencell-093 and Valencell-099 in view of Mannheimer Render Obvious Claims 8-9 and 16-17

Should Patent Owner argue that Valencell-093 and Valencell-099, with or without Carlson, do not disclose the limitations of dependent claims 8-9 and 16-17, these claims would have been unpatentable based on Valencell-093 and Valencell-099, with or without Carlson, in view of Mannheimer. U.S. Patent No. 5,746,206 by Mannheimer issued on May 5, 1998, with an effective filing date of March 14, 1995. It is prior art under 35 U.S.C. § 102(a).

Mannheimer discloses a pulse oximetry monitoring and measurement system that includes a sensor 26 comprised of emitter(s) 16 and detectors 20 and 24:

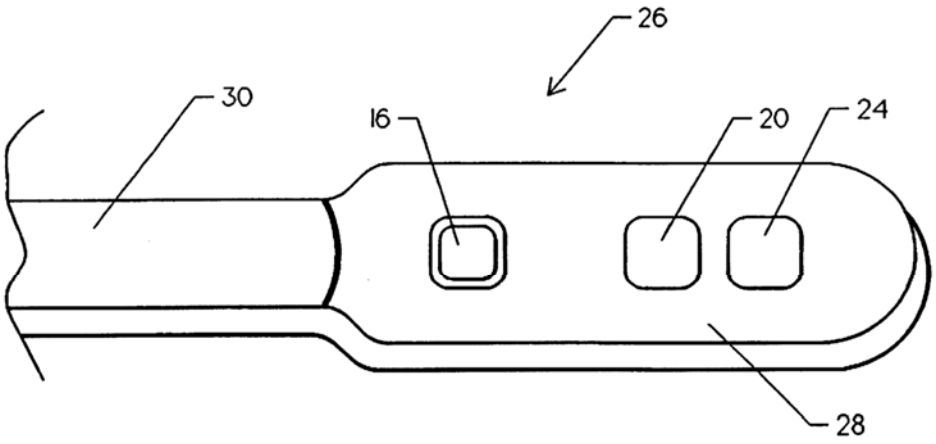

FIG. 2

Ex.1008, 6:17-36, Figs. 2, 4. The sensor uses one or more LEDs to alternately emit red and infrared light at a desired modulation frequency. Ex.1008, 6:20-21, 6:66-7:4. The emitted light is dispersed by the user's tissue, and the reflected light is collected by one or more detectors, which may be connected to one or more analog-to-digital converters. Ex.1008, Fig. 4, 6:17-37.

Mannheimer teaches using emitters that are spaced at different distances from a detector in order to obtain deep and shallow tissue measurements. Ex.1008, 1:40-54, 2:1-6, 3:25-35, Figs. 1B, 7, Ex.100, ¶196. For example, Mannheimer includes an embodiment with two LEDs each spaced a different distance from a single detector. Ex.1008, Fig. 1B, 3:38-40, 5:58-62. In this way, reflected light from a surface layer of skin, which is non-vascular and susceptible to noise from motion and ambient light, can be removed so that light reflected by deeper, more

vascular tissues layers can be used to identify a pulsatile signal of interest. Ex.1003, ¶183; Ex.1008, 3:25-35, 5:1-5.

As shown in Fig. 1B (annotated), the emitters are spaced at different distances from a detector, in order to obtain deep and shallow tissue measurements:

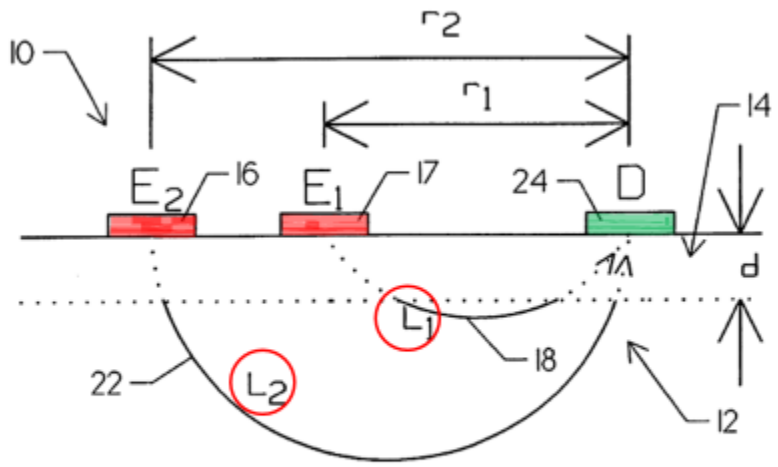

FIG. 1 B

Ex.1008, 1:40-54, 2:1-6, 3:25-35, 5:58-62; Figs. 1B, 7. As shown, Emitter E_1 is located a first distance r_1 from the detector D. Ex.1008, 3:23. Emitter E_2 is located a second distance r_2 from the detector D, wherein r_2 is greater than r_1. Ex.1008, 3:24. As Mannheimer explains, the detector receives light signal 18 (*a first signal*) from emitter E_1 that has a path length L_1. Ex.1008, 3:18-21. The detector receives

light signal 22 (*a second signal*) from emitter E_2 that has a path length L_2, wherein L_2 is greater than L_1. Ex.1008, 3:19-22; Ex.1003, ¶197.

Mannheimer therefore teaches the limitations of dependent claims 8 and 16. Ex.1003, ¶197.

Mannheimer teaches "calculating an arterial oxygen saturation level of [a] patient" from the intensity of signals 18 and 22. Ex.1008, 2:16-18. This calculation includes determining a first intensity I_1 corresponding to the signal 18 detected from light emitted by E_1 and a second intensity I_2 corresponding to the signal 20 detected from light emitted by E_2. Ex.1008, 3:35-54, 4:15-20. Mannheimer then teaches calculating a ratio R from I_1 and I_2 for purposes of calculating "a result related only to the arterial blood saturation of…deeper tissue." Ex.1008, 3:55-5:9; *see also* Ex.1008, 5:23-57 (providing an alternative calculation for the ratio R based on I_1 and I_2). Mannheimer therefore teaches comparing a signal 18 reflected by surface tissue and a signal 22 reflected by deep tissue in order to subtract the effects of light reflected by the surface tissue. Ex.1003, ¶199.

Mannheimer therefore teaches the limitations of dependent claims 9 and 17. Ex.1003, ¶199.

A skilled person would have found it obvious to spatially arrange the emitters and detector of the sensor described in Valencell-093, including one that has been modified as described by Carlson, in the manner described by

Mannheimer. Ex.1003, ¶200. Both references describe using multiple emitters while recognizing the importance of removing noise from a detected signal. Ex.1005, Fig. 9a, [0122]; Ex. 1008, 5:10-20; Ex.1003, ¶200. A skilled person considering how to implement the Valencell device would have considered other prior art for solutions for removing noise, and by so doing, would have considered Mannheimer, which provides extensive guidance on how to configure emitters and detectors being used in optical sensing. Ex.1003, ¶200. That person would have been particularly motivated by the benefits identified in Mannheimer, including that its configuration allows for removing the effects of light reflected by a surface layer of skin so that a signal of interest can be extracted from a deeper tissue layer. Ex.1003, ¶201; Ex.1008, 3:25-35, 5:1-5. A skilled person thus would have been motivated to arrange the Valencell emitters relative to the detector as taught by Mannheimer to remove noise caused by a person's skin. Ex.1003, ¶201.

The modifications to the Valencell-093 sensor, as included in a system described by the combination of Valencell references, suggested by Mannheimer would also yield predictable results. Ex.1003, ¶202. A skilled person would have expected in the Valencell sensor that light from an emitter spaced further away from the detector would penetrate deeper into the user's skin as compared to light from a closer emitter. *Id*. It would have been reasonably predictable that comparing the received light from these different penetration depths, as described

by Mannheimer, could be used to improve performance of the Valencell sensor, such as by removing noise or providing information from an artery as opposed to a capillary or vein. Ex.1003, ¶202, Ex.1005, [0130].

In addition, and as described in Ground 1, Valencell-093 describes a wireless, wearable device that can collect accurate physiological information in the presence of noise, and then communicate that information to other devices for storage and analysis, as described by Valencell-099. As described in Ground 2, the Valencell-093 sensor may be modified to include the techniques taught by Carlson for improving a signal to noise ratio. A skilled person, motivated to build a more accurate wearable, wireless device to use as part of this system would have looked to other references that disclosed additional techniques for improving the operation of an optical sensing systems, particularly to remove noise in order to generate more accurate data. Ex.1003, ¶203. Mannheimer teaches such a technique, by describing how to remove noise caused by skin interference using signals detected from LEDs spaced at different distances from a detector. Ex.1003, ¶203; Ex.1008, 3:25-35, 5:1-5.

The Valencell references, Carlson and Mannheimer are also analogous references, each describing techniques for improving the measurements taken by optical sensing devices for measuring a physiological parameter of the user. Ex.1003, ¶204. The skilled person would have considered the references together

when implementing a system based on the teachings of the Valencell references. Ex.1003, ¶204.

D. No Secondary Considerations Exist

As described above, the combination of Valencell references, with or without Carlson and/or Mannheimer, teaches systems that render *prima facie* obvious the challenged claims of the ’533 Patent. No secondary indicia of non-obviousness exist having a nexus to the putative “invention” of the ’533 patent contrary to that conclusion. Apple reserves its right to respond to any assertion of secondary indicia of non-obviousness advanced by Patent Owner.

VII. Conclusion

Petitioner respectfully submits that the evidence presented in this Petition establishes a reasonable likelihood that Petitioner will prevail in establishing the challenged claims are unpatentable, and requests that Trial be instituted.

Dated: April 10, 2019

Respectfully Submitted,

/Jeffrey P. Kushan/

Jeffrey P. Kushan
Registration No. 43,401
Sidley Austin LLP
1501 K Street NW
Washington, DC 20005
jkushan@sidley.com
(202) 736-8914

Lead Counsel for Petitioner

Ching-Lee Fukuda
Reg. No. 44,334
Sidley Austin LLP
787 Seventh Avenue
New York, NY 10019
clfukuda@sidley.com
(212) 839-7364

Thomas A. Broughan III

Reg. No. 66,001
Kathi Cover
Reg. No. 37,803
Sidley Austin LLP
1501 K Street NW
Washington, DC 20005
tbroughan@sidley.com
kcover@sidley.com
(202) 736-8314

Backup Lead Counsel for Petitioner

Claim Appendix

5. A measurement system comprising:

a light source comprising a plurality of semiconductor sources that are light emitting diodes, the light emitting diodes configured to generate an output optical beam with one or more optical wavelengths, wherein at least a portion of the one or more optical wavelengths is a near-infrared wavelength between 700 nanometers and 2500 nanometers,

the light source configured to increase signal-to-noise ratio by increasing a light intensity from at least one of the plurality of semiconductor sources and by increasing a pulse rate of at least one of the plurality of semiconductor sources;

an apparatus comprising a plurality of lenses configured to receive a portion of the output optical beam and to deliver an analysis output beam to a sample

a receiver configured to receive and process at least a portion of the analysis output beam reflected or transmitted from the sample and to generate an output signal, wherein the receiver is configured to be synchronized to the light source;

a personal device comprising a wireless receiver, a wireless transmitter, a display, a microphone, a speaker, one or more buttons or knobs, a microprocessor and a touch screen, the personal device configured to receive and process at least a portion of the output signal, wherein the personal device is configured to store and display the processed output signal, and wherein at least a portion of the processed output signal is

configured to be transmitted over a wireless transmission link; and

a remote device configured to receive over the wireless transmission link an output status comprising the at least a portion of the processed output signal, to process the received output status to generate processed data and to store the processed data.

7. The system of claim 5, wherein the remote device is further configured to transmit at least a portion of the processed data to one or more other locations, wherein the one or more other locations is selected from the group consisting of the personal device, a doctor, a healthcare provider, a cloud-based server and one or more designated recipients, and wherein the remote device is capable of transmitting information related to a time and a position associated with the at least a portion of the processed data.

8. The system of claim 5, wherein the receiver is located a first distance from a first one of the plurality of light emitting diodes and a different, second distance from a second one of the plurality of light emitting diodes such that the receiver receives a first signal from the first light emitting diode and a second signal from the second light emitting diode.

9. The system of claim89, wherein the output signal is generated in part by comparing the first and second signals.

10. The system of claim 5, wherein the output signal comprises one or more physiological parameters, and the remote device is capable of storing a history of at least a portion of the one or more physiological parameters over a specified period of time.

13. A measurement system comprising:

a wearable measurement device for measuring one or more physiological parameters, including a light source comprising a plurality of semiconductor sources that are light emitting diodes, the light emitting diodes configured to generate an output optical beam with one or more optical wavelengths, wherein at least a portion of the one or more optical wavelengths is a near-infrared wavelength between 700 nanometers and 2500 nanometers,

the light source configured to increase signal-to-noise ratio by increasing a light intensity from at least one of the plurality of semiconductor sources and by increasing a pulse rate of at least one of the plurality of semiconductor sources; the wearable measurement device comprising a plurality of lenses configured to receive a portion of the output optical beam and to deliver an analysis output beam to a sample;

the wearable measurement device further comprising a receiver configured to receive and process at least a portion of the analysis output beam reflected or transmitted from the sample and to generate an output signal, wherein the wearable measurement device receiver is configured to be synchronized to pulses of the light source;

a personal device comprising a wireless receiver, a wireless transmitter, a display, a microphone, a speaker, one or more buttons or knobs, a microprocessor and a touch screen, the personal device configured to receive and process at least a portion of the output signal, wherein the personal device is configured to store and display the processed output signal, and wherein at least a portion of the processed output signal is configured to be transmitted over a wireless transmission link; and

a remote device configured to receive over the wireless transmission link an output status comprising the at least a portion of the processed output signal, to process the received output status to generate processed data and to store the processed data, and wherein the remote device is capable of storing a history of at least a portion of the received output status over a specified period of time.

15. The system of claim 13, wherein the remote device is further configured to transmit at least a portion of the processed data to one or more other locations, wherein the one or more other locations is selected from the group consisting of the personal device, a doctor, a healthcare provider, a cloud-based server and one or more designated recipients, and wherein the remote device is capable of transmitting information related to a time and a position associated with the at least a portion of the processed data.

16. The system of claim 13, wherein the receiver is located a first distance from a first one of the plurality of light emitting diodes and a different, second distance from a second one of the plurality of light emitting diodes such that the receiver receives a first signal from the first light emitting diode and a second signal from the second light emitting diode.

17. The system of claim 16, wherein the output signal is generated in part by comparing the first and second signals.

CERTIFICATE OF COMPLIANCE

I hereby certify that this brief complies with the type-volume limitations of 37 C.F.R. § 42.24, because it contains 13,786 words (as determined by the Microsoft Word word-processing system used to prepare the brief), excluding the parts of the brief exempted by 37 C.F.R. § 42.24.

Dated: April 10, 2019

Respectfully Submitted,

/Jeffrey P. Kushan/
Jeffrey P. Kushan
Reg. No. 43,401
SIDLEY AUSTIN LLP
1501 K Street NW
Washington, DC 20005
Attorney for Petitioner

CERTIFICATE OF SERVICE

I hereby certify that on the 10th day of April, 2019, copies of this Petition for *Inter Partes* Review, Attachments and Exhibits have been served in its entirety by Federal Express on the following counsel of record for Patent Owner:

David Bir
Brooks, Kushman P.C./Cheetah
Omni MedSci
1000 Town Center
Twenty Second Floor
Southfield, MI 48075

Dr. Mohammed N. Islam
Omni MedSci, Inc.
1718 Newport Creek Drive,
Ann Arbor, Michigan 48103

Honigman LLP
c/o Sarah Waidelich
315 E Eisenhower Pkwy
Ann Arbor, MI 48108

Regents of Michigan
Office of Technology Transfer
C/O Richard Brandon
1600 Huron Pkwy, Building 520,
2nd Floor
Ann Arbor, MI 48109-2590

Thomas A. Lewry
John S. LeRoy
Robert C. Tuttle
John M. Halan
Christopher C. Smith
Brooks, Kushman P.C./Cheetah
Omni MedSci
1000 Twon Center
Twenty Second Floor
Southfield, MI 48075

I further certify that on the 10th day of April, 2019, copies of this Petition for *Inter Partes* Review, Attachments and Exhibits have been served in its entirety by U.S. mail on the following counsel of record for Patent Owner:

T. John Ward, Jr.
Claire Abernathy Henry
WARD, SMITH & HILL, PLLC
P.O. Box 1231
Longview, Texas 75606

Dated: April 10, 2019

Respectfully submitted,

/Jeffrey P. Kushan/
Jeffrey P. Kushan
Reg. No. 43,401
Attorney for Petitioner