Paper No. 1

UNITED STATES PATENT AND TRADEMARK OFFICE

BEFORE THE PATENT TRIAL AND APPEAL BOARD

APPLE INC.,
Petitioner,

v.

OMNI MEDSCI, INC.,
Patent Owner.

Patent No. 10,188,299

Inter Partes Review No. IPR2020-00175

Petition for *Inter Partes* Review of
U.S. Patent No. 10,188,299

Table of Contents

I. Introduction 1

II. Certifications; Grounds 2

- **A. Apple May Contest the ’299 Patent (§ 42.104(a)) 2**
- **B. Identification of Claims Being Challenged (§ 42.104(b)) 3**
- **C. Fee for *Inter Partes* Review (§ 42.15(a)) 4**
- **D. Service on Patent Owner (§ 42.105) 4**

III. Background Technology 4

- **A. Photoplethysmography 4**
- **B. Prevailing Industry Trends Before 2012 ..... 7**

IV. The ’299 Patent 11

- **A. The ’299 Patent Is Subject to AIA 11**
- **B. Person of Ordinary Skill in the Art 15**
- **C. File History 16**
- **D. The Board Should Not Deny Institution under 35 U.S.C. § 325(d) or § 314(a) 17**

V. Claim Construction 18

- **A. Beam 18**
- **B. Lens 19**

VI. Detailed Explanation Why the ’299 Patent Claims Are Unpatentable 20

- **A. <u>Ground 1</u>: Lisogurski in View of Carlson Renders Obvious Claims 7 and 11-13 ..... 20**
  - 1. Overview of Lisogurski 20
  - 2. Overview of Carlson 21
  - 3. A Skilled Person Would Have Modified Lisogurski to Incorporate Elements Shown in Carlson 22
  - 4. Theoretical Distinctions Between Lisogurski and Independent Claim 7 25

Omni MedSci Ex. 2021
WHOOP, Inc. v. Omni MedSci - IPR2025-01584

5. Independent Claim 7 26
a) Preamble 26
b) "a light source comprising a plurality of… light emitting diodes, each of the light emitting diodes configured to generate an output optical beam having one or more optical wavelengths, wherein at least a portion of the one or more optical wavelengths is a near-infrared wavelength between 700 nanometers and 2500 nanometers" 26
c) "a lens configured to receive a portion of at least one of the output optical beams and to deliver a lens output beam to tissue;" 27
d) "a detection system configured to receive at least a portion of the lens output beam reflected from the tissue and to generate an output signal having a signal-to-noise ratio, wherein the detection system is configured to be synchronized to the light source" 31
e) "a personal device…" 37
(1) "a personal device comprising a wireless receiver, a wireless transmitter, a display, a microphone, a speaker, one or more buttons or knobs, a microprocessor and a touch screen, the personal device configured to receive and process at least a portion of the output signal" 37
(2) "a personal device… wherein the personal device is configured to store and display the processed output signal, and wherein at least a portion of the processed output signal is configured to be transmitted over a wireless transmission link" 39
f) "a remote device" 41
(1) "a remote device configured to receive over the wireless transmission link an output status comprising the at least a portion of the processed output signal, to process the received output status to generate processed data and to store the processed data" 41

Omni MedSci Ex. 2021
WHOOP, Inc. v. Omni MedSci - IPR2025-01584

g) "wherein the output signal is indicative of one or more of the physiological parameters, and the remote device is configured to store a history of at least a portion of the one or more physiological parameters over a specified period of time" 42

h) "the system configured to increase the signal-to-noise ratio" 43

(1) by increasing light intensity of at least one of the plurality of semiconductor sources from an initial light intensity" 47

(2) "and by increasing a pulse rate of at least one of the plurality of semiconductor sources from an initial pulse rate" 48

i) "the detection system further configured to generate a first signal responsive to light while the light emitting diodes are off" 52

j) "[the detection system further configured to] generate a second signal responsive to light received while at least one of the light emitting diodes is on" 54

k) "[the detection system further configured] to increase the signal-to-noise ratio by differencing the first signal and the second signal" 56

6. Comparison of Dependent Claims to Lisogurski and Carlson .57

a) Dependent Claim 11 57

b) Dependent Claim 12 57

c) Dependent Claims 13 59

B. <u>Ground 2</u>: Lisogurski, Carlson, and Mannheimer Render Obvious Claims 12-13 60

1. Overview of Mannheimer 61

2. A Skilled Person Would Have Modified Lisogurski and Carlson to Incorporate Elements Shown in Mannheimer 61

a) Claim 12 63

(1) A detector located at "*different distances*" from each LED 63

Omni MedSci Ex. 2021
WHOOP, Inc. v. Omni MedSci - IPR2025-01584

(2) A detector "*generat*[*ing*]" both a "*third*" and "*fourth*" signal 65

b) Claims 13.....66

C. <u>Ground 3</u>: Lisogurski, Carlson, and Park (with or without Mannheimer) Render Obvious Claims 10 and 14.....67

a) Overview of Park.....67

b) A Skilled Artisan would combine Lisogurski, Carlson, and Park.....68

c) Dependents Claim 10 and 14 70

D. No Secondary Considerations Exist.....71

VII. Conclusion.....72

Omni MedSci Ex. 2021
WHOOP, Inc. v. Omni MedSci - IPR2025-01584

TABLE OF AUTHORITIES

Cases **Page(s)**

Apple Inc. v. Qualcomm Inc.,
IPR2018-01315, Paper 7 (PTAB Jan. 18, 2019) 17

*Droplets, Inc. v. E*trade Bank*,
887 F.3d 1309 (Fed. Cir. 2018) 14

Intex Recreation Corp. v. Team Worldwide Corp.,
IPR2018-00871, Paper 14 (PTAB Sept. 14, 2018) 17

Kennametal, Inc. v. Ingersoll Cutting Tool Co.,
780 F.3d 1376 (Fed. Cir. 2015) 58

In re Petering,
301 F.2d 676 (CCPA 1962) 58

Sinorgchem Co., Shandong v. Int'l Trade Comm'n,
511 F.3d 1132 (Fed. Cir. 2007) 19

Statutes

35 U.S.C. 102 and 103 15

35 U.S.C. § 111(a) 14

35 U.S.C. § 111(b) 14

35 U.S.C. § 112 ..... 13, 14

35 U.S.C. § 122(b) 14

35 U.S.C. §§ 122(b)(1), (b)(2)(A)(iii) 14

35 U.S.C. § 314(a) 17, 18

35 U.S.C. § 315(b) 3

35 U.S.C. § 325(d) 17, 18

Other Authorities

37 C.F.R. § 1.57(d) 14

Omni MedSci Ex. 2021
WHOOP, Inc. v. Omni MedSci - IPR2025-01584

37 C.F.R. § 1.215 14

37 C.F.R. § 42.15(a) 4

M.P.E.P. 2159.02 15

M.P.E.P. § 903.04 14

M.P.E.P. § 1121 14

Michigan Bylaw 3.10 4

Pub. L. 112-29, §3(n) 15

Omni MedSci Ex. 2021
WHOOP, Inc. v. Omni MedSci - IPR2025-01584

Exhibit List

Exhibit#	Reference Name
1001	U.S. Patent No. 10,188,299
1002	U.S. Patent No. 10,188,299 File History
1003	Declaration of Brian W. Anthony, PhD
1004	Amended Complaint in *Omni MedSci, Inc. v. Apple Inc.*, No. 2:18-cv-429 (E.D. Tex.) (DI 42)
1005	U.S. Patent Publication No. 2012/0197093 ("Valencell-093")
1006	RESERVED
1007	U.S. Patent No. 6,505,133 ("Hanna")
1008	U.S. Patent No. 5,746,206 ("Mannheimer")
1009	U.S. Patent Publication No. 2005/0049468 ("Carlson")
1010	U.S. Patent No. 9,596,990 ("Park")
1011	U.S. Patent No. 9,241,676 ("Lisogurski")
1012	RESERVED
1013	RESERVED
1014	RESERVED
1015	U.S. Provisional Application No. 61/747,487
1016	U.S. Provisional Application No. 61/747,472
1017	U.S. Provisional Application No. 61/747,477
1018	U.S. Provisional Application No. 61/754,698
1019	"The Biomedical Engineering Handbook," by Joseph D. Bronzino (1995) ("BE Handbook")
1020	M. Kranz, et al., The mobile fitness coach: Towards individualized skill assessment using personalized mobile devices, Pervasive and Mobile Computing (June 2012)

Exhibit#	Reference Name
1021	Patel, et al., A review of wearable sensors and systems with application rehabilitation, Journal of Neuroengineering & Rehabilitation (2012)
1022	ScienceDirect Report on M. Kranz, et al., The mobile fitness coach: Towards individualized skill assessment using personalized mobile devices, Pervasive and Mobile Computing (2012), available at https://www.sciencedirect.com/science/article/pii/S1574119212000673?via%3Dihub
1023	"The Usage of Tablets in the HealthCare Industry," by Rauf Adil, available at https://www.healthcareitnews.com/blog/usage-tablets-healthcare-industry (Aug. 2, 2012)
1024	A. Omre, Bluetooth Low Energy: Wireless Connectivity for Medical Monitoring, Journal of Diabetes Science & Technology (Mar. 2010)
1025	1. Absorption Coefficient and Penetration Depth, available at https://eng.libretexts.org/Bookshelves/Materials_Science/Supplemental_Modules_(Materials_Science)/The_Science_of_Solar (Accessed October 29, 2018)
1026	Buttussi, Fabio, Chittaro, Luca, MOPET: A context-aware and user-adaptive wearable system for fitness training (2008)
1027	P. Baum, et al., Strategic Intelligence Monitor on Personal Health Systems, Phase 2: Market Developments - Remote Patient Monitoring and Treatment, Telecare, Fitness/Wellnes and mHealth, JRC Scientific and Policy Reports of European Commission (2013)
1028	Compendium of Chemical Terminology Gold Book Version 2.3.3, February 24, 2014
1029	M. Swan, Senior Mania! The Internet of Things, Wearable Computing, Objective Metrics, and the Quantified Self 2.0, Journal of Sensor and Actuator Networks (2012)
1030	Merriam-Webster's Collegiate Dictionary, Eleventh Edition
1031	U.S. Patent Publication No. 2012/0041767 ("Hoffman")
1032	U.S. Patent No. 7,278,966 ("Hjelt")
1033	Lister et al., Optical properties of human skin (Journal of Biomedical Optics 2012)
1034	Bashkatov et al., Optical properties of human skin, subcutaneous and mucous tissues in the wavelength range from 400 to 2000 nm, Journal of Physics D: Applied Physics (2005)

Exhibit#	Reference Name
1035	E.F. Schubert, Light-Emitting Diodes (Cambridge Univ. Press, 2nd ed. reprinted 2014)
1036	Barolet, Daniel, Light-Emitting Diodes (LEDs) in Dermatology (Seminars in Cutaneous Medicine and Surgery 2008)
1037	RESERVED
1038	RESERVED
1039	Omni MedSci Inc.'s Opening Claim Construction Brief, No. 2:18-cv-134-RWS (filed December 20, 2018)
1040	Apple Inc.'s Preliminary Claim Constructions and Extrinsic Evidence Pursuant to Patent Local Rule 4-2, No. 2:18-cv-134-RWS (filed November 1, 2018)
1041	Exhibit E filed Jan. 14, 2019, No. 2:18-cv-134-RWS. The American Heritage Dictionary excerpts, 5th ed. 2012.
1042	Exhibit O filed Jan. 14, 2019, No. 2:18-cv-134-RWS. The American Heritage Dictionary excerpts, 5th ed. 2012.
1043	Amended Joint Claim Construction and Prehearing Statement. Filed January 11, 2019. No. 2:18-cv-134-RWS
1044	Claim Construction Markman Hearing Transcript, February 6, 2019. No. 2:18-cv-134-RWS
1045	Omni Preliminary Proposed Claim Constructions Pursuant to P.R. 4-2. Served on November 1, 2018. Case No. 2:18-cv-134-RWS
1046	Exhibit G filed Jan. 14, 2019. No. 2:18-cv-134-RWS, Merriam-Webster's Collegiate Dictionary excerpts, 11th ed. 2011.
1047	Exhibit N filed Jan. 14, 2019. No. 2:18-cv-134-RWS, Merriam-Webster's Collegiate Dictionary 106, 11th ed. 2011.
1048	RESERVED
1049	RESERVED
1050	RESERVED
1051	RESERVED
1052	RESERVED
1053	Curriculum Vitae of Brian W. Anthony, PhD
1054	Dr. Mohammed Islam, Faculty Profile, University of Michigan, College of Engineering (available at https://islam.engin.umich.edu)

Exhibit#	Reference Name
1055	Technology Transfer Policy, University of Michigan (available at https://techtransfer.umich.edu/for-inventors/policies/technology-transfer-policy/)
1056	Bylaws of the University of Michigan Board of Regents, (available at http://www.regents.umich.edu/bylaws/bylawsrevised_09-18.pdf)
1057	Claim Construction Memorandum Opinion and Order. Case No. 2:18-CV-000429-RWS (August 14, 2019)
1058	Claim Construction Memorandum Opinion and Order. Case No. 2:18-CV-000134-RWS (June 24, 2019)
1059	RESERVED
1060	RESERVED
1061	RESERVED
1062	Order staying the case, *Omni MedSci, Inc. v. Apple Inc.*, No. 19-cv-05673-YGR (N.D. Cal. Nov. 20, 2019) (DI 219)

Petitioner's Mandatory Notices

A. Real Party in Interest (§42.8(b)(1))

The real party in interest of this petition pursuant to § 42.8(b)(1) is Apple Inc. ("Apple") located at One Infinite Loop, Cupertino, CA 95014.

B. Other Proceedings (§42.8(b)(2))

1. Patents and Applications

U.S. Patent No. 10,188,299 ("'299 patent") is related to following issued patents or pending applications:

- U.S. Patent No. 9,651,533 (the "'533 patent")
- U.S. Patent No. 9,164,032

2. Related Litigation

The '299 patent has been asserted in the following litigations:

- *Omni MedSci, Inc. v. Apple Inc.*, Action No. 2-19-cv-05673-YGR (N.D. Cal.) (pending); and
- *Omni MedSci, Inc. v. Apple Inc.*, Action No. 2-18-cv-00429-RWS (E.D. Tex.) (terminated).

The '533 patent has been asserted in the following litigations:

- *Omni MedSci, Inc. v. Apple Inc.*, Action No. 2-19-cv-05924 (N.D. Cal.) (pending); and

Omni MedSci Ex. 2021
WHOOP, Inc. v. Omni MedSci - IPR2025-01584

- *Omni MedSci, Inc. v. Apple Inc.*, Action No. 2-18-cv-00134-RWS (E.D. Tex.) (terminated).

3. **Patent Office Proceedings**

The ’299 patent is not subject to any other proceedings before the Office. The ’299 patent’s parent, the ’533 patent, is subject to IPR2019-00913 (terminated) and IPR2019-00916 (instituted, pending), filed by Apple.

C. **Lead and Backup Lead Counsel (§42.8(b)(3))**

Lead Counsel is: Jeffrey P. Kushan (Reg. No. 43,401), jkushan@sidley.com, (202) 736-8914. Back-Up Counsel are: Ching-Lee Fukuda (Reg. No. 44,334), clfukuda@sidley.com, (212) 839-7364; Thomas A. Broughan III (Reg. No. 66,001), tbroughan@sidley.com, (202) 736-8314; and Sharon Lee (*pro hac vice* to be submitted), sharon.lee@sidley.com, (212) 839-7305.

D. **Service Information (§42.8(b)(4))**

Service on Petitioner may be made by e-mail (iprnotices@sidley.com), mail or hand delivery to: Sidley Austin LLP, 1501 K Street, N.W., Washington, D.C. 20005. The fax number for lead and backup lead counsel is (202) 736-8711.

Omni MedSci Ex. 2021
WHOOP, Inc. v. Omni MedSci - IPR2025-01584

I. Introduction

Health monitoring systems based on optical sensors, which measure physiological parameters of a user based on how light interacts with the user's tissue and blood, have been ubiquitous for decades. Once found only in hospitals and doctor's offices, these systems are now mainstream consumer devices. Over time, they evolved to become smaller, digital, wireless, and Internet-connected, an evolution driven by several market trends and forces. One such trend sought to meet the needs and convenience of users for such devices to be wearable, unobtrusive, and mobile. Another addressed the need to integrate these devices into a digital data processing environment based on real-time collection and delivery of user data. A third responded to consumer demand for personal health and fitness monitoring devices.

The contested claims of the '299 patent do not define anything inventive. Rather, they cobble together what a well-known textbook describes as the "basic building blocks" of optical sensors (Ex.1019 ("BE Handbook"), 765), in a routine and entirely predictable manner. More specifically, the claims define a device that is comprised of conventional and common components, including multiple light emitting diodes (LEDs) that generate light at least in the near-infrared range, lenses for directing the light to the skin, a receiver, and standard signal processing techniques, which are used for their known and predictable purposes.

Omni MedSci Ex. 2021
WHOOP, Inc. v. Omni MedSci - IPR2025-01584

The claimed devices are not patentably distinct from prior art devices that are comprised of the same or similar components, and are used for the same purpose. For example, U.S. 9,241,676 ("Lisogurski") describes an optical monitor with an LED-based sensor that measures heart rate and various blood constituents. Lisogurski describes various signal processing techniques to extract accurate physiological information from a detected signal in a noisy environment, including modulating the LEDs and techniques for removing ambient light. Other prior art, such as Carlson (Ex.1009), describes conventional techniques used in such optical monitors—such as the use of a lens and increasing an emitter's pulse rate from an initial pulse rate—that a skilled person would have found obvious to use in the analogous devices described in Lisogurski.

The combined teachings of these references describe every element of the challenged claims and render those claims unpatentable. Petitioner therefore respectfully requests that trial be instituted and that these claims be cancelled.

II. Certifications; Grounds

A. Apple May Contest the '299 Patent (§ 42.104(a))

Apple certifies that the '299 patent is available for *inter partes* review (IPR). Apple also certifies it is not barred or estopped from requesting IPR of the claims of the '299 patent. Neither Apple, nor any party in privity with Apple, has filed a

civil action challenging the validity of any claim of the ’299 patent. The ’299 patent has not been the subject of a prior IPR by Apple or a privy of Apple.

Apple also certifies this IPR petition is timely filed as this petition was filed less than one year after January 28, 2019, the date Apple was first served with an amended complaint alleging infringement of a claim of the ’299 patent. *See* 35 U.S.C. § 315(b); Ex.1004.

B. Identification of Claims Being Challenged (§ 42.104(b))

Claims 7 and 10-14 are unpatentable based on the following prior art and grounds.

Reference	Short Name	Publication/Priority Date[1]	Exhibit
U.S. Patent No. 9,241,676	Lisogurski	May 31, 2012	1011
U.S. Patent Publication No. 2005/0049468	Carlson	March 3, 2005	1009
U.S. Patent No. 5,746,206	Mannheimer	May 5, 1998	1008
U.S. Patent No. 9,596,990	Park	November 6, 2013	1010

Challenged Claims	Basis	References
7 and 11-13	§ 103	Lisogurski and Carlson
12-13	§ 103	Lisogurski, Carlson, and Mannheimer
10 and 14	§ 103	Lisogurski, Carlson, and Park, with or without Mannheimer

[1] Lisogurski and Park are prior art under §102(a) and (d) (AIA) or §102(a) and (e) (pre-AIA). Carlson and Mannheimer are prior art under §102(a) (AIA) and §§102(a) and (b) (pre-AIA).

Omni MedSci Ex. 2021
WHOOP, Inc. v. Omni MedSci - IPR2025-01584

C. Fee for *Inter Partes* Review (§ 42.15(a))

The Director is authorized to charge the fee specified by 37 C.F.R. § 42.15(a) to Deposit Account No. 50-1597.

D. Service on Patent Owner (§ 42.105)

Omni MedSci, Inc. is identified as the patent owner of record in the assignment records for the ’299 patent. The named inventor of the ’299 Patent, Dr. Islam, has been a member of the faculty of the University of Michigan since 1992. Ex.1054. Based on the University of Michigan Bylaw 3.10 and Technology Transfer Policy, the University of Michigan is the owner of the ’299 patent. Ex.1055; Ex.1056 at 21-22. Dr. Islam has also purported to assign the patent to OmniMedSci. *Id*. Petitioner has thus served this petition on both the University of Michigan and Omni MedSci.

III. Background Technology

A. Photoplethysmography

Optical health monitors use a sensing technique called photoplethysmography (“PPG”) that has been known and used for decades in medical monitoring systems. Ex.1003, ¶39; Ex.1019, 769-76, 1346-55. PPG works by shining light through a person’s tissue and measuring the light that is either reflected back or transmitted through the tissue. Ex.1019, 766. Different components of blood and tissue absorb and reflect different wavelengths of light.

Ex.1003, ¶40. By measuring how much light is absorbed and its changes over time, a device can calculate the components of the blood and tissue. Ex.1003, ¶40.

For example, hemoglobin (the substance in blood that carries oxygen to cells) reflects more red light when it is oxygenated and absorbs more red light when it is deoxygenated. Ex.1019, 769; *see* Ex.1003, ¶41. Hemoglobin, however, reflects the same amount of infrared (IR) light whether oxygenated or deoxygenated. Ex.1019, 769. If a device measures the absorbed red and IR light multiple times per second, the device can determine: (i) the ratio of oxygenated to deoxygenated hemoglobin (oxygen saturation), and (ii) how the volume of blood in the tissue changes over time, allowing detection of a person's pulse. Ex.1019, 769, 771; Ex.1003, ¶41.

PPG is an optical technique that uses conventional optical components. Ex.1003, ¶42. The 1995 BE Handbook explains that the "basic building blocks" of optical sensor systems include lenses, mirrors, filters, beam splitters, light sources, fiber optics, and detectors. Ex.1019, 765. As illustrated in the figure below, light is directed through a lens and onto a sample. Ex.1019, 765. The light reflects back from the sample, is filtered, and sensed by a photodetector. *Id.*; Ex.1003, ¶¶43-45. The photodetector outputs a signal proportionate to the measured light intensity, and then analog-to-digital conversion and signal processing are performed to extract data. Ex.1019, 766. To improve the signal-to-noise ratio, the light source

is typically modulated, and the detector uses "synchronized lock-in amplifier detection" to isolate signals that occur at the modulation frequency. Ex.1019, 764, 766. This allows the detector to reduce the noise in the detected signal. Ex.1003, ¶¶44-46. It was common to perform a spectral analysis of signals captured by sensors, and the "traditional method of frequency analysis [is] based on the Fourier transform." Ex.1019, 846-47.

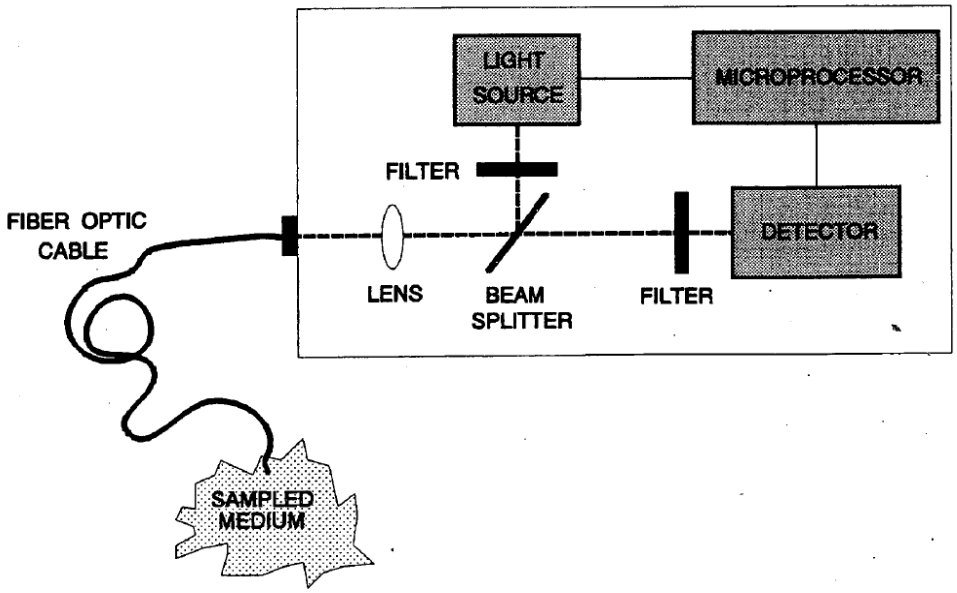

FIGURE 52.1 General diagram representing the basic building blocks of an optical instrument for optical sensor applications.

Portable devices conventionally use light emitting diodes (LEDs) as the light source because LEDs are small and have low power requirements. Ex.1019, 765; Ex.1003, ¶42.

B. Prevailing Industry Trends Before 2012

From 2000 to 2012, several market trends and needs drove the medical device industry to develop wearable, mobile sensor devices that could wirelessly communicate user data to remote devices. Ex.1003, ¶50.

One trend responded to the challenge of providing medical care for patients in their homes or in locations where there was not easy access to a physician. This drove development of wireless monitoring technologies that could be worn by the patient and used to transmit data to a remote physician or care provider. Ex.1021, 2; Ex.1024, 462; Ex.1027, 15-31; *see* Ex.1003, ¶¶50, 52-54.

Another trend was to bring heart rate sensing devices based on pulsoximetry to the consumer market for personal fitness tracking and other uses. Ex.1003, ¶¶51-52. As a June 2012 review observed:

> A multitude of commercial health devices and sensors, such as oximeters and heart rate monitors, formerly reserved for professional use, are now available and can be connected to smartphones. GPS watches, pedometers and heart rate monitors…

Ex.1020, 3; *see also* Ex.1009, [0004] ("Pulsoximetry measuring devices are also used in sports for control and survey of athletes."); Ex.1029, 221; Ex.1005, [0003] ("There is growing market demand for personal health… monitors, for example, for gauging overall health, fitness, metabolism, and vital status during exercise, athletic training…"); Ex.1027, 33, 35.

A third trend sought to take advantage of the miniaturization of electronics and communication technology, which led to the development of smaller, wearable monitoring systems for mobile health and fitness applications. Ex.1021, 3; Ex.1022, 1; *see* Ex.1003, ¶¶53-54.

A fourth trend in the medical industry was to use apps and smartphones to not only deliver care to patients but to give individuals access to health data for fitness or health issues. This drove integration of miniaturized, network-connected monitoring devices with smartphones and similar devices. Ex.1027, 9-10, 40-49; Ex.1023, 1-2 ("Doctors and nurses were the early adopters of tablets"); Ex.1021, 4; *see* Ex.1023, 5 (One of "the biggest usage of tablets stems from… [p]atient monitoring and data collection…, includ[ing] using the Bluetooth enabled sensor devices…"); Ex.1027, 41; *see* Ex.1003, ¶¶53-54. It also led to the prevalent use of cloud-based data transfer and storage of data. Ex.1003, ¶54.

These market trends provided a strong motivation to skilled persons to integrate medical optical sensing techniques into miniaturized wearable consumer devices that communicate wirelessly with smart devices and remote services. Ex.1003, ¶¶51-52. They also led to a proliferation of products using a distributed architecture supporting personal health, sports, and mobile monitoring systems. Ex.1003, ¶55.

One example of this architecture was described in Patel 2012:

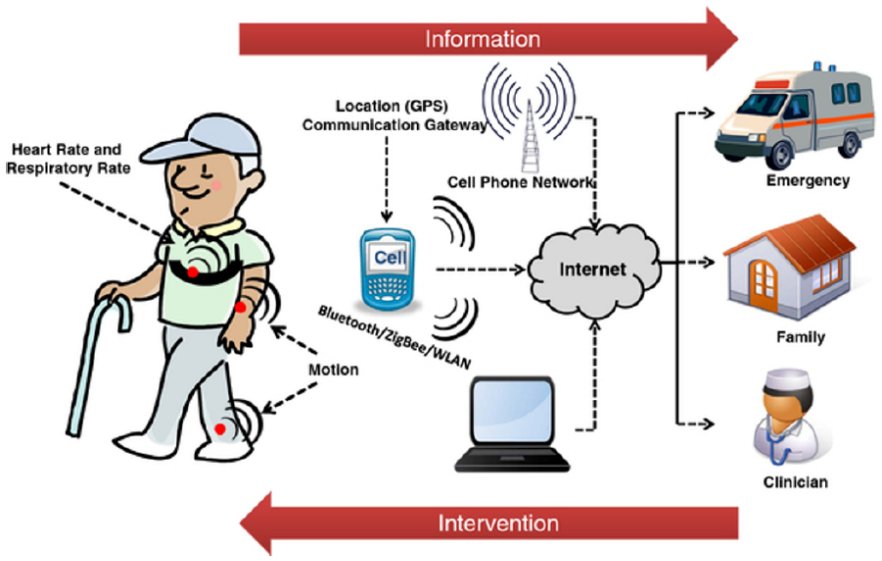

Figure 1 Illustration of a remote health monitoring system based on wearable sensors. Health related information is gathered via body-worn wireless sensors and transmitted to the caregiver via an information gateway such as a mobile phone. Caregivers can use this information to implement interventions as needed.

Ex.1021, 2. As this figure illustrates, data from wearable sensors are transmitted to a cellphone, which in turn transmits the data and GPS information to remote devices used by a clinician, family, or an emergency responder. The data are also transmitted to and stored in the cloud. Ex.1021, 2, 4.

A 2010 publication described a similar architecture in which "medical data can be sent from a wireless monitor to a cell phone or PC and from there to a remote physician." Ex.1024, 459-60; Ex.1003, ¶56.

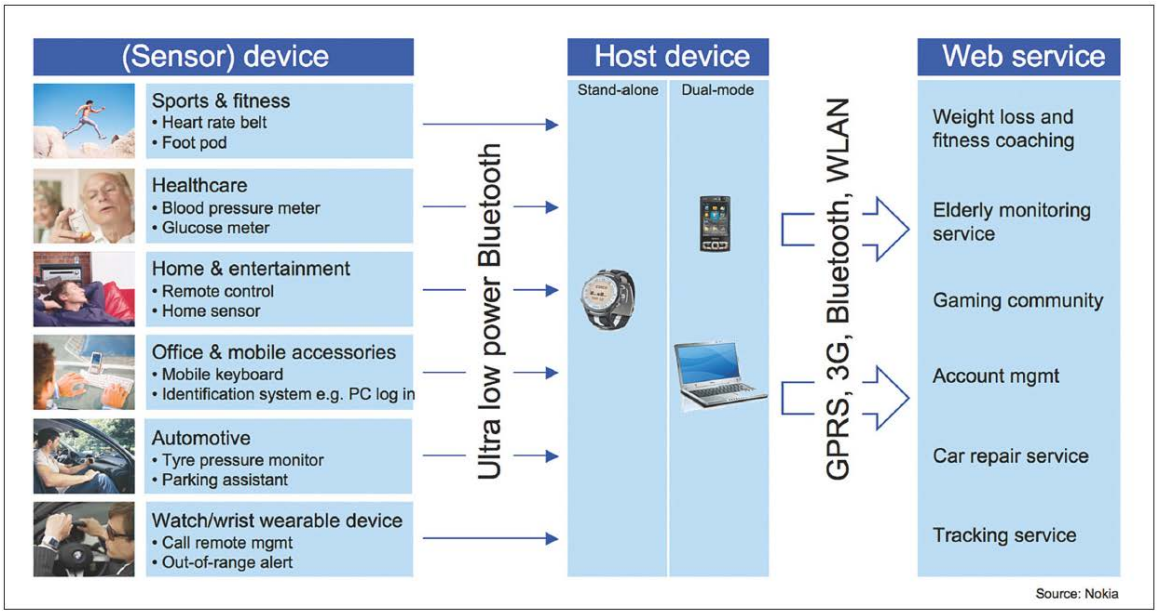

Figure 2. Bluetooth low energy will extend interoperable wireless connectivity to coin-cell-powered wireless sensors in health care, fitness, and related sectors. WLAN, wireless local area network; GPRS, general packet radio service.

Other articles from around 2012 similarly envisioned use of "cloud"-based services to support this interconnected scheme. Ex.1003, ¶57-58. A 2012 article illustrated a cloud-based architecture implemented as a fitness app as follows:

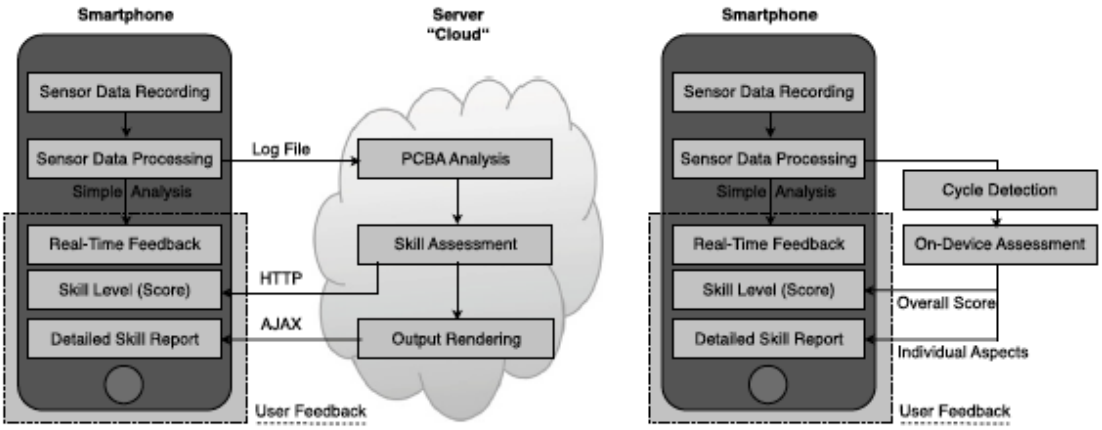

(a) Iteration 1: the smartphone records sensor data during exercising, which are processed by a server after the training to generate skill assessment.

(b) Iteration 2: data is processed on the phone for real-time feedback as well as sophisticated feedback addressing individual aspects after the execution.

Fig. 3. Iterations of the GymSkill application.

Ex.1020, 7. In this example, a smartphone records and processes sensor data, sends the data to a cloud server for further processing, and then the cloud server returns processed data back to the smartphone for display to the user. Ex.1020, 6-7, 12. This same article specifically recognized this type of system could be used with heart rate monitors and optical sensors.

IV. The ’299 Patent

A. The ’299 Patent Is Subject to AIA

The ’299 patent issued from U.S. Application No. 15/594,053 (filed May 12, 2017) and purportedly claims benefit to U.S. provisional applications 61/747,487 (the “’487 provisional), as shown below. Ex.1001, 1:7-13.

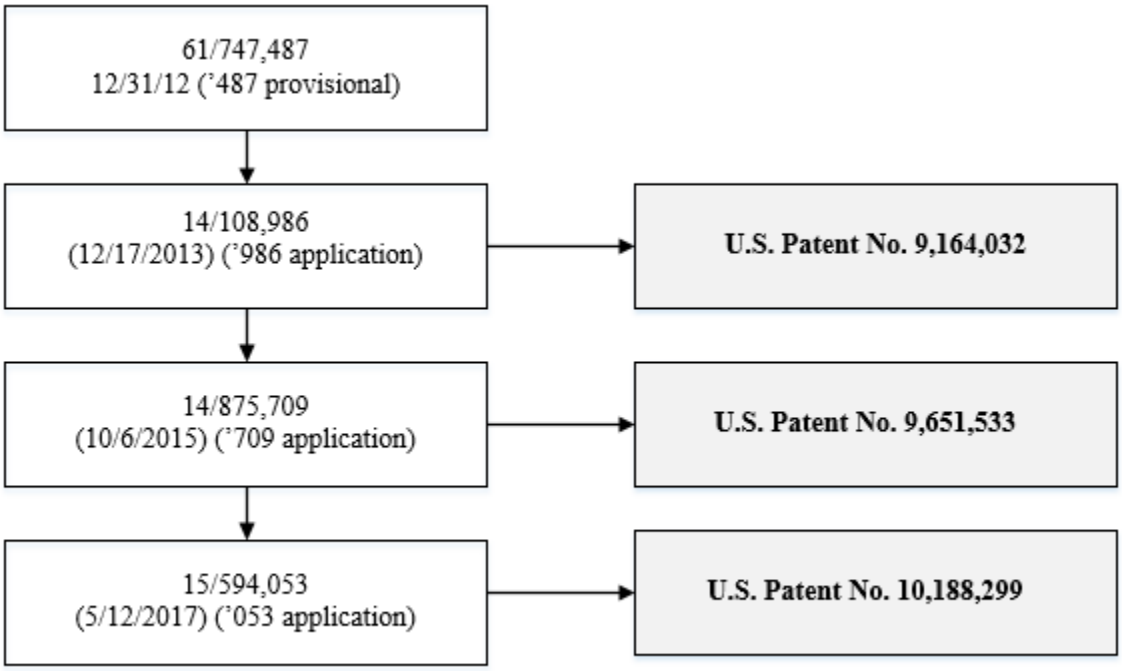

The application further incorporates by reference a number of other applications and provisional applications. Ex.1001, 1:14-43.

The '487 Provisional does not demonstrate possession of a device as described in at least claims 7 and 10-14 of the '299 patent. Ex.1003, ¶31. Claim 7 requires a "personal device" that "receives and processes" an output signal from a measurement apparatus, and then wirelessly transmits the processed signal to a "remote device." The lack of written description support for these claim limitations can be easily appreciated by observing that the passages in the '299 patent concerning these elements are absent from the'487 Provisional. *See* Ex.1001, 29:64-32:17 (adding a new section for "Wireless Link to the Cloud"). The '487 Provisional does not contain this passage or one that otherwise describes

the personal device and remote device aspects of the claims. Ex.1003, ¶31. While the '487 Provisional describes a detection system that can send data to "a computational system, comprising computers or other processing equipment," there is no disclosure of the computing system wirelessly sending processed data to a remote system for additional processing. Ex.1015, [0066], [0074] (describing a computer system 1811). The '487 Provisional also describes a camera that can wirelessly interface with a computer, tablet, or smartphone, but there is no disclosure of those devices sending the camera data to a remote device. Ex.1015, [0068]; Ex.1003, ¶31.

Consequently, the only provisional to which the '299 Patent claims priority does not demonstrate possession of a device as defined by claims 7 and 10-14, as 35 U.S.C. § 112 requires. These claims may not properly claim priority to the '487 Provisional.[2]

Notably, applicant cannot rely on provisional applications that were incorporated by reference, but to which priority was not claimed, to provide

---

[2] Petitioner does not concede that Patent Owner is entitled to a priority date earlier than the actual filing date of the '709 application. If Patent Owner presents arguments as to why it believes the claims are entitled to priority to any earlier filed applications, Petitioner reserves its right to respond to that showing.

written description support for the claims. Any such disclosure is "essential material" that may only be incorporated by reference via "a U.S. patent or U.S. patent application ***publication*** which 'does not itself incorporate such essential material by reference.'" 37 C.F.R. § 1.57(d);[3] *Droplets, Inc. v. E*trade Bank*, 887 F.3d 1309, 1318 (Fed. Cir. 2018) (claim amendments can transform nonessential material into essential material, causing a § 112 violation). A provisional application cannot be a "U.S. patent application publication" specified in Rule 57(d) because it is never published.[4]

Patent Owner may contend that incorporated matter from the provisionals is not "essential material." Plainly it is, as this material is required to provide written description support to the claims. Regardless, Patent Owner may not rely on

---

[3] All emphases added, unless otherwise noted.

[4] A "patent application publication" is a non-provisional application filed under 35 U.S.C. § 111(a) that has been published pursuant to 35 U.S.C. § 122(b). A provisional patent application cannot be a patent application publication because it is filed under 35 U.S.C. § 111(b) and is expressly excluded from publication under § 122(b). *See* 35 U.S.C. §§ 122(b)(1), (b)(2)(A)(iii); 37 C.F.R. § 1.215; M.P.E.P. § 1121 (defining contents of a "patent application publication"); M.P.E.P. § 903.04.

disclosures in any of the incorporated by reference provisionals *for any purpose* before the date on which they were incorporated by reference into the disclosure of an application to which the '299 patent makes a valid claim of benefit or priority. The earliest possible date when this could have occurred was December 17, 2013, and therefore, for the purposes of this petition, this is the earliest possible priority date of the claims.[5] Because that date is after March 16, 2013, every claim of the '299 patent is subject to the first-to-file provisions of the AIA.[6]

B. Person of Ordinary Skill in the Art

A person of ordinary skill in the art ("skilled person") would have a good working knowledge of optical sensing techniques and their applications, and familiarity with optical system design and signal processing techniques. That knowledge would have been gained via an undergraduate education in engineering (electrical, mechanical, biomedical or optical) or a related field of study, along

---

[5] Petitioner reserves its right to dispute any assertion by Patent Owner that the claims are entitled to priority earlier than December 17, 2013.

[6] Pub. L. 112-29, §3(n); *see* M.P.E.P. 2159.02 ("AIA 35 U.S.C. 102 and 103 apply to any patent application that contains or contained at any time a claim to a claimed invention that has an effective filing date that is on or after March 16, 2013.").

with relevant experience studying or developing physiological monitoring devices (e.g., non-invasive optical biosensors) in industry or academia. Ex.1003, ¶37. This description is approximate; varying combinations of education and practical experience also would be sufficient. *Id.*

Apple's positions regarding how a skilled person would have understood the '299 patent claims and the prior art are supported by the testimony of Brian Anthony, Ph. D., an expert in optical sensing devices with over 20 years of experience. *Id.*, ¶¶1-9, 38.

C. File History

The '299 patent was never rejected. The examiner allowed the patent after a preliminary amendment that added several limitations to independent claims 1, 6, and 12. Ex.1002, 234-238. Specifically, the examiner's reasons for allowance state that the prior art did not teach several limitations. Ex.1002, 251-252. The examiner later issued four notices of allowability ("NOA") in response to requests from the Applicant (*e.g.*, submitting IDSs or further claim amendments) maintaining the same rationale. Ex.1002, 489-492, 520-521, 584-585, 630-634.

After the first two NOAs were issued, applicant filed an IDS that included the prior art that Apple had identified in its Answer and Counter Claims filed on July 19, 2018. *E.g.*, Ex.1002, 506, 555-564. These references included Lisogurski (Ex.1011), Carlson (Ex.1009), Mannheimer (Ex.1008), and Park (Ex.1010).

Ex.1002, 506, 507, 555, 557. Though the examiner considered every IDS, he provided no additional reasons for allowance over the new prior art. Ex.1002, 251-252, 494-492, 585-601.

D. The Board Should Not Deny Institution under 35 U.S.C. § 325(d) or § 314(a)

The Board should not deny institution because some references were merely listed in an IDS considered by the examiner. *Intex Recreation Corp. v. Team Worldwide Corp.*, IPR2018-00871, Paper 14, at 13 (PTAB Sept. 14, 2018) (references initialed in an IDS, but not discussed or used as basis for rejections, received only "[c]ursory consideration... [that] weighs against exercising discretion to deny under § 325(d)" (citation omitted)); *see also Apple Inc. v. Qualcomm Inc.*, IPR2018-01315, Paper 7, at 22-26 (PTAB Jan. 18, 2019). After the examiner first allowed the claims, the applicant submitted all of the prior art references Apple identified in the litigation involving the '299 patent's parents, including Lisogurski, Carlson, Mannheimer, and Park. In the subsequent allowances, the examiner maintained his initial reasons for allowing the claims, and neither the applicant nor the examiner, however, specifically addressed these references, much less explained why the claims were patentable over this prior art, either alone or in combination. Moreover, the examiner did not consider Dr. Anthony's declaration, Ex.1003, which provides additional evidence and facts about the teachings of the references and knowledge of a skilled artisan at the relevant period. Thus, the

Board should not deny institution under § 325(d) as this Petition does not advance unpatentability theories previously considered by the Patent Office.

In IPR2019-00916, involving a parent of the ’299 patent, the Board considered whether it should exercise its discretion to deny the petition under 35 U.S.C. § 314(a) because at that time, a trial in the concurrent district court case was scheduled to occur eight months prior to when the Board’s final written decision would be due. The timing of the district court trial is not an issue in this proceeding because the district court litigation has been stayed pending the outcome of this and related IPRs. Ex.1062.

V. Claim Construction

The parties have disputed several claim terms in two related district court litigations. The parties offered alternative constructions for these terms, Ex.1043, and the Court provided a final construction of each disputed term. Ex.1058; Ex.1057.

For consistency, the PTAB should apply the district court’s constructions of these terms. However, even if the PTAB were to apply Apple’s proposed district court constructions, the art discloses the elements in these terms.

A. Beam

The claim term “*beam*” is expressly defined in the specification: “As used throughout this disclosure, the terms ‘optical light’ and or ‘optical beam’ and or

'light beam' refer to photons or light transmitted to a particular location in space." Ex.1001, 10:43-45. This definition should be adopted verbatim as the patentee's chosen lexicography. *Sinorgchem Co., Shandong v. Int'l Trade Comm'n*, 511 F.3d 1132, 1136 (Fed. Cir. 2007) (patentee who acts as his own lexicographer is bound by his definition). In the district court litigation, the parties offered the same construction, but disputed whether this term excluded scattered, diffused, and randomly directed light. That dispute is irrelevant to the issues in this IPR.

Therefore, "*beam*" should be construed to mean "photons or light transmitted to a particular location in space."

B. Lens

The district court construed this term to have its plain and ordinary meaning, as Omni had proposed. That meaning encompasses the only type of lens described by the '299 patent, which is one that is transparent and will "collimate or focus the light." Ex.1001, 19:38-39; 20:2-5, 23:1-2. This is consistent with dictionary definitions. Ex.1046, 712; *see also* Ex.1041, 481. Thus, the plain and ordinary meaning of "*lens*" encompasses Apple's proposed district court construction of one or more transparent surfaces used to collimate (make parallel) or focus rays of light. Because the prior art shows lens that meet Apple's proposed construction, the Board need not address this dispute.

VI. Detailed Explanation Why the '299 Patent Claims Are Unpatentable

A. Ground 1: Lisogurski in View of Carlson Renders Obvious Claims 7 and 11-13

1. Overview of Lisogurski

Lisogurski describes a portable physiological monitoring system that uses a wearable optical sensor to measure a person's pulse rate and oxygen saturation (*e.g.*, a pulse oximetry system). Ex.1011, 3:66-4:8. The system includes a sensor, a monitor, and remote devices such as a server. Ex.1011, 11:28-32, 15:43-48; Ex.1003, ¶68. The sensor can be worn in various locations, such as on a fingertip or wrist, Ex.1011, 4:6-8, 4:15-20, is battery powered, and can wirelessly communicate with the monitor, Ex.1011, 17:55-58; Ex.1003, ¶69. The sensor can include several light emitting diodes (LEDs) and photodetectors. Ex.1011, 17:37-45, 10:48-64, 11:9-13.

The system regulates a light drive signal, which is the electric current applied to the LEDs. Ex.1011, 11:38-41, 11:50-54, 12:3-9; Ex.1003, ¶71. For a particular LED, the emitted light intensity increases as a higher current is applied. Ex.1011, 12:3-9, 12:16-22, 7:13-16, 7:24-31. Lisogurski teaches that the LEDs can be modulated. Ex.1011, 4:48-54, 8:4-8, 8:27-35, 16:25-32. Depending on various conditions, the device can change the modulation parameters and the light drive cycle. Ex.1011, 1:60-61, 1:67-2:3. The drive cycle parameters that can be controlled include "light intensity, duty cycle, [and] light source firing rate."

Ex.1011, 1:60-61, 1:67-2:3; *see id.*, 1:19-21, 5:48-54, 25:53-55. Lisogurski explains that varying the drive cycle parameters can increase the signal-to-noise ratio of the device when interference is encountered. Ex.1011, 5:55-6:6, 9:46-52, 27:44-49; Ex.1003, ¶73.

The LEDs emit modulated light that is passed into a person's tissue, and a photodetector detects the light reflected back. Ex.1011, 4:7-11, 10:48-56, 11:13-20; Ex.1003, ¶72. The detector "convert[s] the intensity of the received light into an electrical signal." Ex.1011, 11:14-16. The sensor can send the detected signal directly to the monitor or it can pre-process the signal first. Ex.1011, 11:20-27. Lisogurski shows that the sensor can connect to the monitor with a wired or a "wireless[]" connection. Ex.1011, 17:54-59, Fig. 3. Either way, the device applies signal processing techniques to the detected signal to isolate the signal from the reflected light. Ex.1011, 7:16-21, 12:48-49; *see generally id.*, 13:7-14:55 (describing various signal processing).

2. Overview of Carlson

Carlson describes a wearable pulse oximeter that can be worn on the ear, finger, or "other parts of the human body." Ex.1009, [0052], [0078]; Ex.1003, ¶76. The device uses a conventional sensor that emits optical wavelengths in the red (*e.g.*, 660 nm) and infrared (*e.g.*, 800 to 1000 nm) ranges, and it detects light that has been transmitted or reflected. Ex.1009, [0003], [0050], [0052]. The device is

mobile and can wirelessly transmit data to a doctor or hospital. Ex.1009, [0072], [0077]-[0078]; Ex.1003, ¶76.

Carlson's objective is to "increas[e] the technical performance of pulsoximetry in terms of quality and robustness of the measurement signal versus environmental disturbances and energy consumption." Ex.1009, [0002]; *see* Ex.1003, ¶77. Carlson notes that while known sensors can be used in telemedicine, athletics, and other mobile applications, these standard sensors "suffer from signal instability and insufficient robustness versus environmental disturbances." Ex.1009, [0004]. Carlson therefore has the objective "to define optical and/or electronic means for increasing the Signal-to-Noise ratio (S/N)… of a pulsoximeter sensor for robust application of pulsoximetry in telemedicine and near patient testing applications in rough (optical) environmental conditions, e.g. at changing light influences, such as sunlight, shadow, artificial light, etc." Ex.1009, [0010]. These observations in Carlson provide a direct motivation to a skilled person to incorporate its techniques, features and other improvements into other pulsoximetry devices. Ex.1003, ¶81.

3. A Skilled Person Would Have Modified Lisogurski to Incorporate Elements Shown in Carlson

A skilled person would have considered the systems described in Lisogurski in conjunction with those described in Carlson, as both concern analogous miniaturized wireless puloximetry devices having the same applications (*e.g.*,

mobile monitoring of pulse and other physiological characteristics of a person). Ex.1003, ¶82.

Lisogurski describes a PPG system that is designed to optimize power consumption. Ex.1011, 1:4-6, 3:50-53. Its system allows "for increased battery life" and "or increased portability." Ex.1011, 1:16-18. As an example, Lisogurski explains that its techniques could improve oximeters by reducing power requirements, allowing for smaller devices or longer life. Ex.1011, 4:63-67. Lisogurski describes these improvements in a system that includes a wearable sensor, *e.g.*, one worn on a wrist. Ex.1011, 4:15-20, 17:51-58. Lisogurski teaches several techniques for increasing the signal-to-noise ratio of measured signals while minimizing power consumption. Ex.1011, 9:46-52. As Dr. Anthony explains, these teachings would have motivated a skilled person to look for other techniques for achieving the same objectives, particularly those used with wearable sensors. Ex.1003, ¶¶79-82. A skilled person would do that as part of the ordinary design process he or she follows to improve the operation of a device; they naturally would look to complementary designs and techniques in analogous systems. Ex.1003, ¶80.

That would have led the skilled person to Carlson, which describes techniques for improving pulse oximetry devices by improving both signal measurement and energy consumption. Ex.1009, [0002]; Ex.1003, ¶81. Carlson

teaches techniques and structures for increasing the signal-to-noise ratio of the optical sensing performed by such devices, even where optical conditions of the environment are changing. Ex.1009, [0010]. Carlson indicates its techniques are energy efficient and can be used in battery-powered devices, such as those worn on an earlobe or finger. Ex.1009, [0048], [0052]. Carlson describes incorporating its techniques in devices used for hospital patients, for mobile monitoring and telemedicine, and for sports applications to monitor athletes. Ex.1009, [0004].

Lisogurski and Carlson thus describe analogous systems with common applications and utility; both describe techniques for improving the power consumption of portable and wearable optical sensing devices while improving their performance and utility. Ex.1003, ¶82. The skilled person would have considered the references together when implementing a system based on Lisogurski's teachings. Ex.1003, ¶82.

Moreover, as explained in §III.B, above, by 2012, there was a general trend in the industry to create wearable devices that can be used in mobile monitoring situations or for sports and personal fitness applications. Ex.1003, ¶¶50-58, 83. Thus, the skilled person considering Lisogurski would have had reason to look to references describing techniques for creating or improving wearable devices for these mobile health and consumer applications, such as Carlson. Ex.1003, ¶83.

The skilled person also would have been motivated to include specific features from Carlson in Lisogurski's system, for the reasons set forth below.

4. Theoretical Distinctions Between Lisogurski and Independent Claim 7

As explained below, Lisogurski describes systems having all, or nearly all, of the elements of the claimed systems. Patent Owner may, however, contend that certain distinctions exist between those claims and Lisogurski. For independent claim 7 (from which all the other claims depend), these theoretical distinctions include whether Lisogurski discloses:

- a "*lens*";
- increasing the signal-to-noise ratio by "*increasing a pulse rate*" of an LED;
- that its sensor alone includes every component of the measurement device in the claims (*e.g.*, that the claims require the LEDs and the circuitry that controls them to be physically integrated into a single component).

One other potential distinction is with respect to claims 10 and 14, which specify inclusion of a reflective surface.

Each supposed distinction would be inconsequential to patentability, as a skilled person would have considered each to have been an obvious variation of Lisogurski.

5. Independent Claim 7

a) Preamble

The preamble of claim 7 specifies "*[a] system for measuring one or more physiological parameters*." Lisogurski describes such a measurement system. Ex.1011, 3:43-46, 3:61-4:3 ("a pulse oximeter… may non-invasively measure the oxygen saturation of a patient's blood"); *see id.*, Abstract, 4:52-62, Figs. 1 and 3; Ex.1003, ¶86.

Lisogurski's system (including a sensor and a monitor) "*measure[es] one or more physiological parameters*" – it describes "an optical physiological monitoring system" that "may be used to determine physiological parameters such as blood oxygen saturation, hemoglobin…, pulse rate, other suitable parameters, or any combination thereof." Ex.1011, 1:10-25; *id.*, 3:43-46; *see also id.*, 3:61-4:5, 4:22-25, 15:30-35; Ex.1003, ¶¶88-89.

b) "a light source comprising a plurality of… light emitting diodes, each of the light emitting diodes configured to generate an output optical beam having one or more optical wavelengths, wherein at least a portion of the one or more optical wavelengths is a near-infrared wavelength between 700 nanometers and 2500 nanometers"

Lisogurski describes a wearable sensor that can include a light source comprising multiple LEDs ("*a plurality of… light emitting diodes…*"). Ex.1011, 17:42-45 ("sensor unit 312 may include multiple light sources and detectors."), 10:48-49, 10:58-64 ("light source 130 may include any number of light sources");

Fig. 1 (130); Fig. 3 (316); Ex.1003, ¶¶90-91. Lisogurski states that each LED is configured to output a different optical wavelength. Ex.1011, 7:38-8:3 ("For example…, the first light source may be a high efficiency infrared (IR) LED while the one or more additional light sources may be lower efficiency red LEDs."); Ex.1003, ¶91. The light source may include any number of LEDs, such as multiple IR LEDs and multiple red LEDs. Ex.1011, 10:58-63, 17:37-45, 19:25-31; Ex.1003, ¶92.

Lisogurski explains that the LEDs are "configured to emit photonic signals having one or more wavelengths of light (e.g., Red and IR) into a subject's tissue" ("*an output optical beam having one or more wavelengths*"). *Id.*, 10:49-52; *see id.*, 4:42-45; Ex.1003, ¶92. The LEDs are configured to direct the light "into a subject's tissue," (Ex.1011, 10:49-52), and thus, they create light "transmitted to a particular location in space" as required by the term "*beam*." Ex.1003, ¶92. Lisogurski also explains that "the IR wavelength may be between about 800 nm and about 1000 nm" ("*a near-infrared wavelength between 700 nanometers and 2500 nanometers*"). *Id.*, 10:56-58.

c) "a lens configured to receive a portion of at least one of the output optical beams and to deliver a lens output beam to tissue;"

Lisogurski teaches using conventional red and infrared LEDs to emit an optical beam, Ex.1011, 10:53-56, 7:38-8:3, and that each sensor can include

multiple LEDs of each wavelength, Ex.1011, 19:25-31. A skilled person would have known that a conventional LED is comprised of a light emitting semiconductor that creates light, and that the semiconductor typically is encapsulated in glass or another medium. Ex.1003, ¶94. The encapsulant can be used to protect the semiconductor, but it also commonly is shaped as a lens to focus the light emitted by the LED. Ex.1003, ¶94. Thus, a skilled person would understand that each LED includes a lens. Ex.1003, ¶¶93-94.

The skilled person would have known there were three types of LEDs: (i) LEDs with no encapsulant, (ii) LEDs with an optically inert encapsulant, and (iii) LEDs with an encapsulant that acts as a lens. Ex.1003, ¶95; Ex.1035, 97-98, 191-99, 266-67. In the last type, the encapsulant helps direct more of the light produced by the LED outward toward the tissue (and thus "transmit[] [the light] to a particular location in space"), increasing its efficiency, which is important in a mobile, battery-powered device. Ex.1003, ¶96. The skilled person would have found it obvious to select an LED that uses an encapsulant that functions as a lens, as this was a common LED configuration with known benefits in analogous applications. Ex.1003, ¶¶95-96, 98. When configured in this manner, each of Lisogurski's LEDs would emit a portion of an "*output optical beam*," which would be captured and focused by that LED's encapsulant lens, and then emitted as the "*lens output beam*." Ex.1003, ¶97.

Thus, Lisogurski describes "*a lens configured to receive a portion of at least one of the output optical beam and to deliver an lens output beam to tissue*."

As noted above (§VI.A.4), Patent Owner may contend that Lisogurski does not disclose a lens. Even if that distinction were accepted, the skilled person would have found it obvious to include a lens in Lisogurski's device based on that person's knowledge as well as Carlson. Ex.1003, ¶¶99-101.

A skilled person considering Lisogurski would have known that a lens is a "basic building block[]" of an optical sensor (Ex.1019, 765) and that lenses commonly were part of such sensors. Ex.1003, ¶104. That person would have found it obvious to include a separate lens for each LED in Lisogurski's sensor, given that lenses were a standard component of such sensors. *Id.* Thus, to the extent Lisogurski's LEDs do not suggest the use of lenses ("transparent surfaces used to collimate (make parallel) or focus rays of light" per Apple's district court construction), doing so for each LED would have been obvious based on a skilled person's knowledge. Ex.1003, ¶99.

Carlson independently identifies the benefits of using lenses within portable optical sensing devices. Ex.1003, ¶¶101-04. Carlson teaches use of a plurality of lenses, (Ex.1009, [0013] ("at least one beam shaping optical element")), and that they can be "diffractive or refractive lenses" that "direct the emitted optical radiation… into the human or animal tissue…." Ex.1009, [0013], [0014], [0024],

[0062]. A "refractive lens" is one that focuses rays of light, and thus, it meets Apple's district court construction of "*lens*." Ex.1003, ¶101. Figure 4 of Carlson shows two lenses 21 that receive light beams 8 emitted by LEDs 15 ("*a portion of at least one of the output optical beam*") and deliver light bundles or beams 12 to sample 2 ("*deliver an lens output beam to tissue*"). Ex.1009, [0054], [0062].

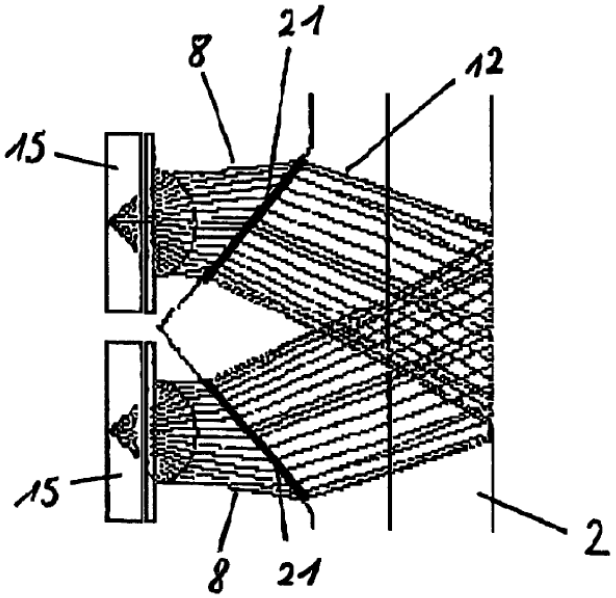

Figure 4

Ex.1009, Fig.4; *id.*, [0054] ("in Fig. 4, using the beam shaping optics 21, the two initial light beams 8 are guided in the form of bundled beams 12"). Thus, as the figure shows, the light within each beam is "transmitted to a particular location in space" and meets the construction of "*beam*." Ex.1003, ¶¶101-02.

A skilled person would have considered it obvious to include a plurality of lenses in Lisogurski's sensor for the reason Carlson identifies—to focus the light emitted by each of the LEDs onto a person's skin. Ex.1003, ¶103. Carlson

identifies a benefit of doing so: that lenses "increase the optical signal power…, thus increasing the Signal/Noise … ratio" without increasing the actual power used by the system. Ex.1009, [0014]; *id.*, [0010].

The skilled person also would have been motivated to include lenses in Lisogurski. Ex.1003, ¶¶103-04. One of the objectives Lisogurski identifies is to improve devices' power efficiency, including via techniques that improve the signal-to-noise ratio of the measured optical signal. Ex.1011, 6:3-6, 9:49-60, 13:60-14:10, 14:40-55, 37:6-20; Ex.1003, ¶¶79, 103. The skilled person would have recognized that adding lenses to Lisogurski would achieve that objective as they improve signal measurement efficiency and complement Lisogurski's operation. Ex.1003, ¶¶103-04. The skilled person also would have known that lenses are a "basic building block[]" of optical sensors, (Ex.1019, 765) and would have been able to integrate them into Lisogurski with routine effort, (Ex.1003, ¶104). A skilled person thus would consider the addition of lenses to Lisogurski to be a predictable arrangement of known elements, with each performing the same function it was known to perform and yielding what one would expect from the arrangement. Ex.1003, ¶104.

d) "a detection system configured to receive at least a portion of the lens output beam reflected from the tissue and to generate an output signal having a

signal-to-noise ratio, wherein the detection system is configured to be synchronized to the light source"

Lisogurski's sensor includes one or more detectors that receives "the light that is reflected by or has traveled through the subject's tissue" ("*receive[s]… at least a portion of the lens output beam*"). Ex.1011, 17:40-42; *see also id.*, 11:9-10; Fig. 1 (140); Fig. 3 (318). The detector thus "*generate[s] an output signal*" because it "convert[s] the intensity of the received light into an electrical signal." Ex.1011, 11:14-17; 11:20-25; Fig. 1 (102); Fig. 3 (312); Ex.1003, ¶106. Lisogurski also teaches that "[a]fter converting the received light to an electrical signal, detector 140 may send the detection signal to monitor 104" (Ex.1011, 11:20-22) and that the sensor may further process the electrical signal before transmitting the detection signal to the monitor (Ex.1011, 11:25-27).

Lisogurski's detector(s) is connected to front end processing circuitry (together, "*a detection system*"), which "may receive a detection signal from detector 140 and provide one or more processed signals to back end processing circuitry 170." Ex.1011, 12:42-45. The "processed signals" in Lisogurski correspond to the claimed "*output signal*." Ex.1003 ¶¶107-08.

Lisogurski further discloses that the "detection signals" have "*a signal to noise ratio*," and the "processed signals" originate from those "detection signals." Ex.1003, ¶108; Ex.1011, 14:49-50 ("This may have a detrimental effect on the signal-to-noise ratio of the detection signal"); *see also* Ex.1011, 9:46-52 (noting

the detected signal may include "background noise" and that the light drive parameters of the LEDs may be modified to "improve ***the signal-to-noise ratio***"), 11:20-27. Accordingly, a skilled person would have recognized that the "processed signals" have a "*signal-to-noise ratio*". Ex.1003, ¶108.

Lisogurski teaches that the front-end processing circuitry is synchronized with the light drive circuitry that controls the pulsing of the LEDs. Ex.1011, 11:41-46 ("front end processing circuitry 150 may… operate ***synchronously*** with light drive circuitry 120. For example, front end processing circuitry 150 may ***synchronize*** the operation of an analog-to-digital converter and a demultiplexer with the light drive signal based on the timing control signals."). Thus, the front-end processing circuitry and the detector(s) (together being a "*detection system*") are "*synchronized*" to the light drive signal ("*the light source*"). Ex.1003, ¶110.

Lisogurksi also describes embodiments where the firing rate of an LED is correlated to the sampling rate of an analog-to-digital converter. Ex.1011, 33:47-49 ("sampling rate modulation may be correlated with light drive signal modulation"); *see also* 2:1-2, 27:44-52 (LED firing rate can be modulated). Lisogurski explains "[f]or example, the time between 'on' periods [for an LED] may be the length of time of 'off' period 220 of FIG. 2A… [D]ecreasing the duration of the 'off' periods (i.e., ***increasing the emitter firing rate***) relates to an increased sampling rate." Ex.1011, 35:25-31. Lisogurski teaches an embodiment

where the measurements taken by the receiver have a one-to-one correlation, with one sample taken per on period. Ex.1011, 35:17-19.[7] A skilled person would have understood that in this embodiment, the LEDs and the receiver are synchronized. Ex.1003, ¶111. This is another way in which Lisogurski teaches that the front end processing circuitry and the detector(s) (together being a "*detection system*") are "*synchronized*" to the light drive signal ("*the light source*"). Ex.1003, ¶111.

Lisogurski's use of timing signals to synchronize the operation of the light source and the detection circuitry, is consistent with embodiments in '299 specification. Ex.1003, ¶112; Ex.1001, 18:11-13 ("the light source may be modulated, and then the detection system would be synchronized with the light source."), 20:40-42 ("some sort of synchronous detection system may be used").

Lisogurski thus describes "*a detection system*" that receives and processes the reflected light, and that is "*synchronized*" to the "*the light source*".

As noted above (§VI.A.4), Patent Owner may argue that Lisogurski does not teach this element because the front-end processing circuitry is depicted in monitor 104 which is separate from wearable sensor 102 that contains the detector. To the

---

[7] Lisogurski discloses different embodiments where there is not a one-to-one correlation, and instead multiple samples are taken per on period and then averaged. Ex.1011, 35:19-23.

extent the claims are found to require the front-end processing circuitry and detector to be in the same device and that configuration is not shown Lisogurski, the skilled person would have considered doing so to have been obvious. Ex.1003, ¶¶113-14. The relevant circuitry is depicted in the annotated figure below.

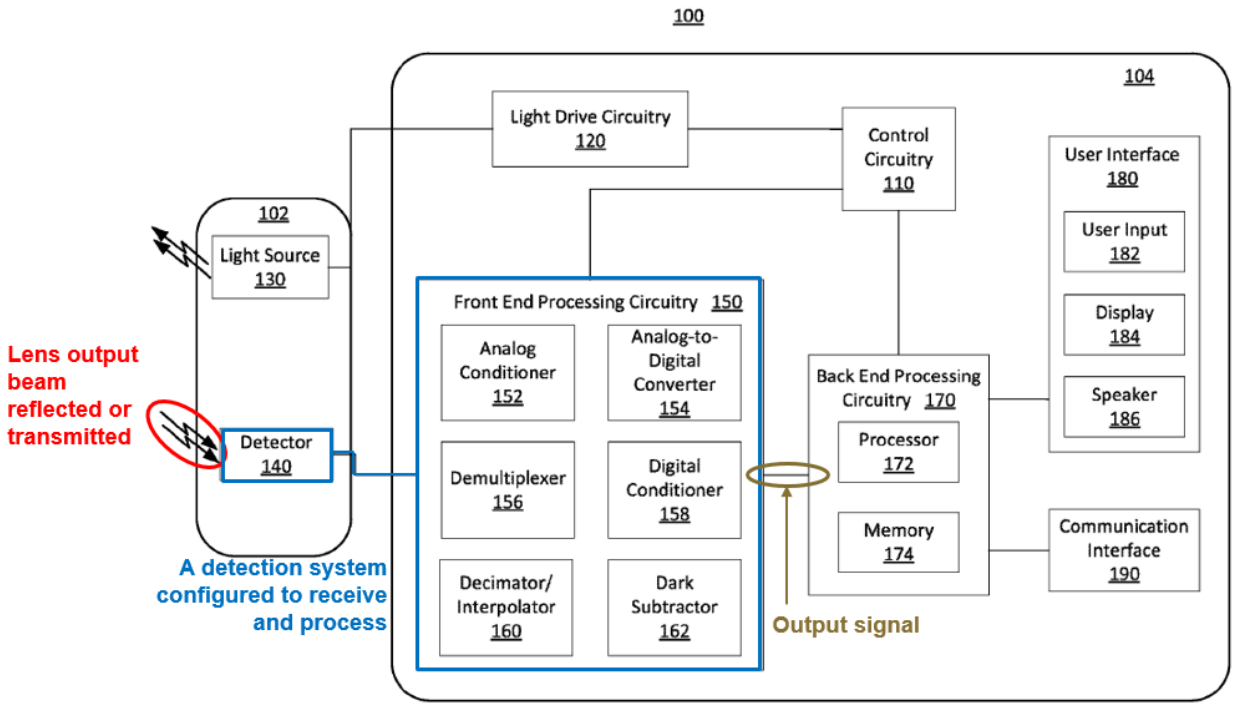

FIG. 1

Ex.1003, ¶109.

A skilled person would have found it obvious to integrate the front-end processing circuitry into the sensor. Ex.1003, ¶114. Lisogurski teaches that the sensor can "preprocess" the electrical signal before transmitting the signal to the monitor. Ex.1011, 11:20-27. It also explains that the sensor may be a separate device that is wirelessly connected to the monitor. Ex.1011, 17:55-59 ("Sensor unit 312 may be powered by an internal power source, e.g., a battery (not

shown)…. [T]he sensor may be wirelessly connected to monitor 314 (not shown)."), 18:23-25; *see also id.*, 18:16-31, 17:32-35. While this configuration is not depicted in Lisogurski's figures, the skilled person would have considered it obvious to configure the system to work that way based on the functional relationship between these elements. Ex.1003, ¶114.

As Dr. Anthony explains, the skilled person also would have found it obvious to include the front-end processing circuitry in the sensor so that the sensor could process the detected signal and wirelessly transmit it to the monitor. Ex.1003, ¶115. That person would have understood that the analog signal output from the detector would need to be converted to digital form for wireless transmission. *Id.* Thus, that person would have found it obvious to include the front-end processing circuitry, which performs analog-to-digital conversion and other initial processing of the signal, in the sensor where the signal is captured. *Id.* Adding this additional circuitry to the sensor would not have affected the device's operation. *Id.* The necessary circuitry is small and power efficient, and could easily be integrated into the wearable sensor. *Id.* This is also consistent with the indication in Lisogurski that "[i]n some embodiments the functionality of some of the components may be combined in a single component… [or] the functionality of some of the components of monitor 104… may be divided over multiple components." Ex.1011, 16:2-9; Ex.1003, ¶116.

Finally, a skilled person would have found a motivation to combine these elements into the sensor component based on general trends in the industry in 2012 (*see* §III.B above), which would encourage inclusion of additional features into wearable devices to improve their operation in mobile monitoring systems or for sports and personal fitness applications. Ex.1003, ¶117.

e) "a personal device…"

(1) "a personal device comprising a wireless receiver, a wireless transmitter, a display, a microphone, a speaker, one or more buttons or knobs, a microprocessor and a touch screen, the personal device configured to receive and process at least a portion of the output signal"

The back-end processing circuitry, user interface, and communication interface in Lisogurski's monitor 104 corresponds to the claimed "*personal device*." The monitor includes a display and user interface that allows a user to see the monitored person's physiological parameters and to configure the operation of the system. Ex.1011, 15:19-42; Ex.1003, ¶118. These components are in annotated Figure 1 below:

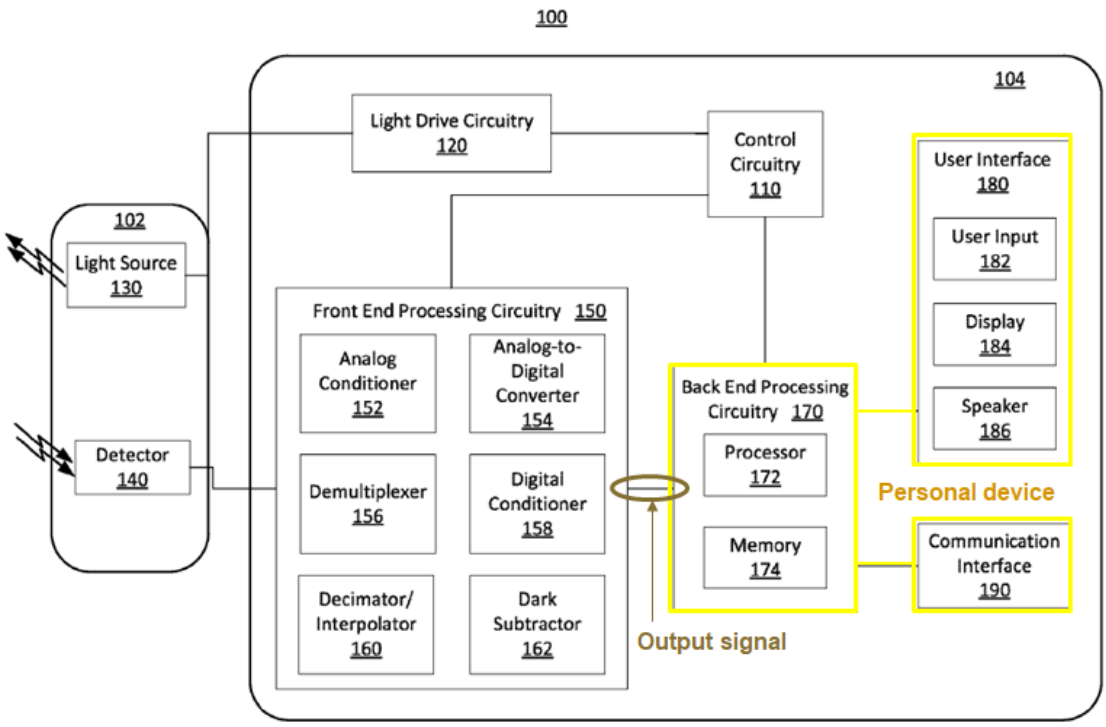

FIG. 1

Ex.1003, ¶118.

Lisogurski teaches that the front-end processing circuitry performs some initial processing on the detected signal and then passes the processed signal to back-end processing circuitry 170, which is coupled to user interface 180 and communication interface 190. Ex.1011, 15:16-18; Fig. 1. It also describes the back-end processing circuitry as including a processor that receives and processes the output signal from the front-end processing circuitry ("*configured to receive and process at least a portion of the output signal*"), (Ex.1011, 14:60-62), and that "[f]or example, processor 172 may determine one or more physiological

parameters based on the received physiological signals." Ex.1011, 14:62-64; Ex.1003, ¶119.

The back-end processing circuitry includes a processor 172 ("*a microprocessor*") and is coupled to the user interface, which may include "any type of user input device such as… ***a touch screen***, ***buttons***…, ***a microphone***, a joy stick, a touch pad, or any other suitable input device." Ex.1011, 15:20-23; Fig. 1 (180, 182). The user interface also includes a ***display*** and a ***speaker***. Ex.1011, 15:19-20; Fig. 1 (180, 184, 186). The communication interface "may include one or more ***receivers*** [or] ***transmitters***" each of which "may be configured to allow …***wireless*** communication." Ex.1011, 15:49-56. Thus, it discloses all the elements of this limitation. Ex.1003, ¶120.

(2) "a personal device… wherein the personal device is configured to store and display the processed output signal, and wherein at least a portion of the processed output signal is configured to be transmitted over a wireless transmission link"

Lisogurski explains that the back end processing circuitry of monitor 104 includes a processor that "may determine one or more physiological parameters based on the received physiological signals" and a display that shows those physiological parameters ("*the processed output signal*"), including "for example, an estimate of a subject's blood oxygen saturation generated by monitor 104 (referred to as an 'SpO_2' measurement) [and] pulse rate information." Ex.1011,

14:62-64, 15:30-35; Ex.1003, ¶121. It also explains that the back end processing circuitry includes a memory such as RAM, ROM, flash memory, hard drive (magnetic disk). Ex.1011, 14:64-15:16; Fig. 1 (174). Likewise, it explains the memory can store a history of the determined physiological parameters. Ex.1011, 27:31-36, 30:42-48, 33:23-27. Thus, the processed data is both "*store[d] and display[ed]*." Ex.1003, ¶¶121-22.

Lisogurski teaches not only that the determined physiological parameters may be displayed, but that the "data [may be published] to a server or website" and the parameters may be made available to a user by any other suitable technique. Ex.1011, 26:55-60. Lisogurski explains that to publish the data to a server or website or to have it transmitted to another device, the back end processing circuitry of the monitor can transmit information to external devices through a wireless transmission link such as "WiFi, IR, WiMax, BLUETOOTH, UWB or other standards." Ex.1011, 15:43-48; 15:55-57. Thus, the processed data are "*transmitted over a wireless transmission link*." Ex.1003, ¶123.

In addition, Lisogurski teaches that the determined physiological parameters may be wirelessly transmitted to another monitor 326 that can process and display information from multiple monitoring devices. Ex.1011, 18:11-15, 18:49-62 ("Multi-parameter physiological monitor 326 may be configured to calculate physiological parameters and to provide a display 328 for information from

monitor 314 and from other medical monitoring devices… Monitor 314 may be communicatively coupled to multi-parameter physiological monitor 326… and/or may communicate wirelessly.”). Both monitors can further share the information with servers or other workstations. Ex.1011, 18:11-15, 18:62-65 (“In addition, monitor 314 and/or multi-parameter physiological monitor 326 may be coupled to a network to enable the sharing of information with servers or other workstations.”). Thus, this is a second way the processed data are “*transmitted over a wireless transmission link*.” Ex.1003, ¶124.

f) “a remote device”

(1) “a remote device configured to receive over the wireless transmission link an output status comprising the at least a portion of the processed output signal, to process the received output status to generate processed data and to store the processed data”

Lisogurski teaches that the determined physiological parameters and other data (“*an output status comprising at least the processed output signal*”) may be wirelessly transmitted “to a server or a website” or to another monitor (each a “*remote device*”). Ex.1011, 26:55-60 (publish to server or website), 18:11-15, 18:58-62 (monitor can send data to another monitor); *id.*, 15:43-48 (data can be wirelessly sent to “electronic circuitry, a device, a network, a server or other workstations”), 15:55-57 (describing wireless transmission); Ex.1003, ¶125. It also indicates that when the data is transmitted to a server, website, another

monitor, or other remote device, it may be further processed and stored. For example, to "publish" data to a server or website, the server or website would need to process the data and then store it. Ex.1011, 26:55-60; Ex.1003, ¶126. Lisogurski also explains that "processing equipment remote to the system may be used to determine physiological parameters." Ex.1011, 26:51-55. Where the remote device is another monitor, that monitor can be a "[m]ulti-parameter physiological monitor 326 [] configured to calculate physiological parameters and to provide a display 328 for information from monitor 314 and from other medical monitoring devices or systems." Ex.1011, 18:49-53. A person of ordinary skill would understand that these devices generate and store processed data in order to perform these functions. Ex.1003, ¶¶127-28.

g) "wherein the output signal is indicative of one or more of the physiological parameters, and the remote device is configured to store a history of at least a portion of the one or more physiological parameters over a specified period of time"

Lisogurski explains that the data ("*output signal*") transmitted to a server, website, another monitor, or other remote device may be stored or "published." Ex.1011, 26:55-60; Ex.1003, ¶129. It also explains that where the remote device is another monitor, that monitor can be a "[m]ulti-parameter physiological monitor 326 [] configured to calculate physiological parameters...." Ex.1011, 18:49-53. Lisogurski teaches that the data stored and shared by these devices include

historical data, indicating, *inter alia*, that the described system can perform "historical analysis of prior cardiac cycles." Ex.1011, 20:8-9, 19:1-19. "For example…, [s]tatistical information… may also be calculated… for the historical information." Ex.1011, 20:9-13; *see* Ex.1003, ¶130.

A skilled person would have understood that to calculate historical information, the system must store historical physiological data ("*history of at least a portion of the one or more of the physiological parameters*") over a specified period of time (*e.g.*, a certain number of cardiac cycles or a certain period of time). Ex.1003, ¶¶129-32. Lisogurski goes on to explain that "processing equipment remote to the system may be used to determine physiological parameters." Ex.1011, 20:53-55. A person of ordinary skill would therefore understand that the remote device stores a history of the data and can perform the described historical analysis. Ex.1003, ¶¶129, 133-34.

h) "the system configured to increase the signal-to-noise ratio"

Lisogurski teaches that the light source is in the wearable sensor 102. Ex.1011, 10:48-49. It teaches alteration of the light drive parameters of the LEDs in response to "the level of noise, ambient light, [or] other suitable reasons," and that "increas[ing] the brightness of the light sources in response to [increased level of background] noise to improve the signal-to-noise ratio." Ex.1011, 9:46-52; *id.*, 5:55-6:6 (discussing modulation techniques and "conventional servo algorithms"

for adjusting the signals emitted by the LEDs), 1:67-2:3; Ex.1003, ¶135. It also explains that changes to the light drive parameters can be used to mitigate the effects of noise, motion, or ambient light, for example, to thereby increase the signal-to-noise ratio. Ex.1011, 5:57-61; 9:46-52, 9:57-60, 14:49-55, 35:5-9 ("It will also be understood that the earlier described embodiments relating to varying light output may also apply to sampling rate."); Ex.1003, ¶136.

Lisogurski explains that signal modulation techniques are controlled by control circuitry and light drive circuitry, which generate a light drive signal for activating and controlling the sensor's light sources. Ex.1011, 1:44-46, 11:38-41, 11:50-54. It identifies the light drive signal "[p]arameters that may be varied include light intensity, firing rate, duty cycle, other suitable parameters, or any combination thereof." Ex.1011, 1:19-21. These parameters correspond to brightness (light intensity), frequency (firing rate), and pulse width which is the duration of each pulse of light (duty cycle). Ex.1003, ¶137.

Lisogurski thus teaches that "*the system [is] configured to increase signal-to-noise ratio*" by varying light drive parameters of the LEDs. Ex.1003, ¶¶135-38.

As noted above (§VI.A.4), Patent Owner may contend that Lisogurski does not teach this element because the control and light drive circuitry that control the LEDs is depicted in monitor 104, which is separate from the wearable sensor 102 that contains the LEDs. To the extent the claims could be considered to require the

control and light drive circuitry and the LEDs to be in the same device, that configuration of Lisogurski would have been obvious. Ex.1003, ¶¶139-40.

Lisogurski teaches the control circuitry directs the light drive circuitry to generate the light drive signal, which is the electric current provided to the LEDs that turns them on and determines their brightness. Ex.1011, 11:38-41, 11:50-54, 25:52-55; Ex.1003, ¶141. Because these circuits work together to output the electric current that is applied to the LEDs, the skilled person would have understood that this circuitry would need to be in the same device as the LEDs (the sensor), or at least that it was obvious to include the circuitry there. Ex.1003, ¶141; Ex.1011, 11:38-41, 11:50-54, 25:52-55. A wired configuration of these elements is presented in Figure 1 of Lisogurski (annotations added).

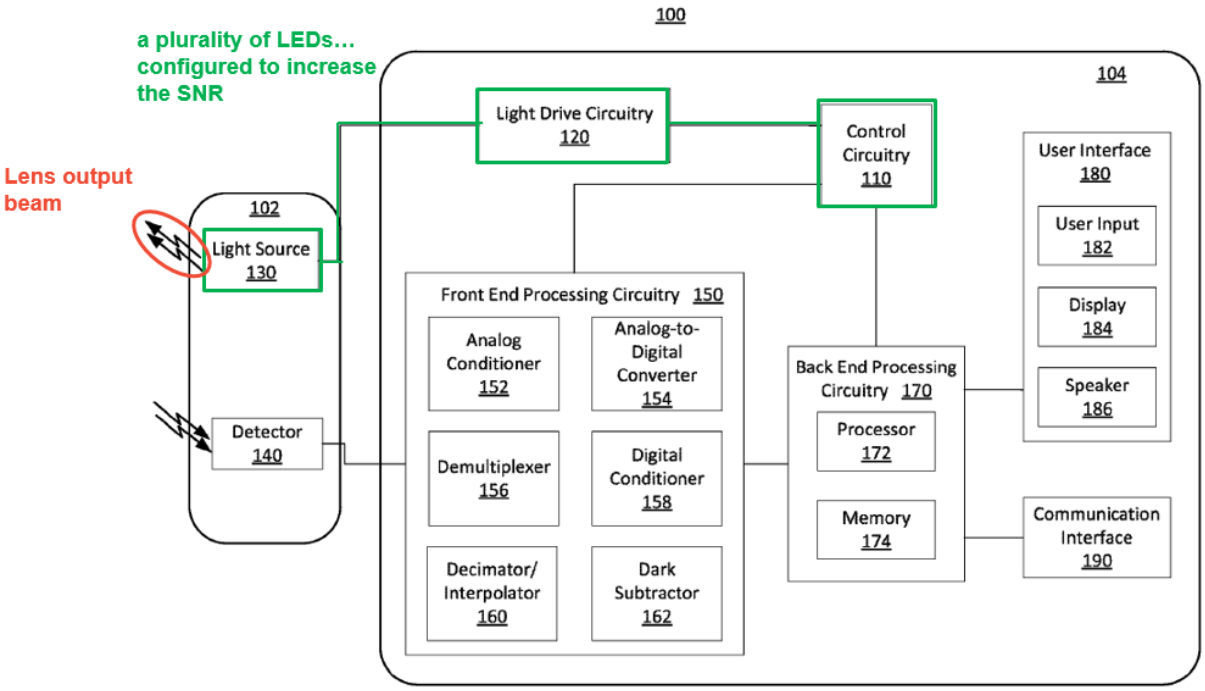

FIG. 1

Ex.1003, ¶138.

Lisogurski also teaches a wireless embodiment, where the sensor containing the LEDs is separate from the monitor. Ex.1011, 17:55-59 ("Sensor unit 312 may be powered by an internal power source, e.g., a battery (not shown)…. [T]he sensor may be wirelessly connected to monitor 314 (not shown)."), 18:23-25; *see also id.*, 18:16-31, 17:32-35; Ex.1003, ¶¶139-41. The skilled person would have understood that in the wireless embodiment, the light drive and control circuitry would be in the wireless sensor so they could apply current to the LEDs. Ex.1003, ¶¶140-41. Lisogurski also expressly teaches dividing or combining discrete elements into one component, stating: "[i]n some embodiments the functionality of some of the components may be combined in a single component… [or] the functionality of some of the components of monitor 104… may be divided over multiple components." Ex.1011, 16:2-9. The skilled person would have recognized this guidance to apply to configuration of the LEDs and the light drive and control circuitry, as those elements work together. Ex.1003, ¶142.

A skilled person also would have recognized that adding this additional circuitry to the sensor would not have negatively affected the operation of the device. Ex.1003, ¶142. Moreover, the necessary circuitry is small and power efficient, and could easily be integrated into the wearable sensor. *Id.* The skilled person would have had a motivation to do so from general trends in the industry in

2012, including those favoring integration of multiple features and capabilities in wearable devices to improve their operation in mobile monitoring systems or for sports and personal fitness applications. Ex.1003, ¶143.

Consequently, an ordinary artisan would have found it obvious to modify the illustrated implementation of Lisogurski in Figure 1 to combine the light drive and control circuitry into a wireless sensor containing the LEDs. Ex.1003, ¶¶139-43.

(1) by increasing light intensity of at least one of the plurality of semiconductor sources from an initial light intensity"

Lisogurski teaches increasing the signal-to-noise ratio by increasing the "brightness" of a light source, which corresponds to the light intensity of that light source ("*increasing light intensity from an initial light intensity from an initial light intensity*"). Ex.1003, ¶149 (intensity is the brightness squared). For example, Lisogurski explains that the sensor may receive "an increased level of background noise in the signal due to patient motion. The system may ***increase the brightness of the light sources*** in response to the noise ***to improve the signal-to-noise ratio***." Ex.1011, 9:46-52; *see id.*, 37:6-22, 6:3-6. A skilled person would have recognized that a light source's brightness must originally have an initial light intensity so the system can later increase it. Ex.1003, ¶144. Therefore, Lisogurski describes this element. Ex.1003, ¶¶144-149.

(2) "and by increasing a pulse rate of at least one of the plurality of semiconductor sources from an initial pulse rate"

Lisogurski explains that its system can adjust various parameters of light emitted by the LEDs to ensure an adequate signal-to-noise ratio. Ex.1011, 9:46-52; *id.*, 37:6-22. These parameters include "drive current or light brightness, duty cycle, [and] ***firing rate***" amongst others. Ex.1011, 27:44-52; *id.*, 2:1-2 ("light source firing rate"), 8:29-35, 25:49-55; Ex.1003, ¶152. A person of ordinary skill would understand that the "firing rate" of an LED is the same as the claimed "pulse rate,"[8] because both terms refer the number of pulses of light generated by the LED per unit of time. Ex.1003, ¶153.

Lisogurksi describes embodiments where the firing rate of an LED is correlated to the sampling rate of an analog-to-digital converter in the detector. Ex.1011, 33:47-49 ("In some embodiments, sampling rate modulation may be correlated with light drive signal modulation."); *see also*, *id.*, 11:43-46; 11:52-55. Lisogurski explains "[f]or example, the time between 'on' periods [for an LED] may be the length of time of 'off' period 220 of FIG. 2A… [D]ecreasing the

---

[8] As Dr. Anthony explains, Lisogurski uses the term "firing rate" to refer the frequency at which the LED blinks, Ex.1011, 2:1-2 ("light source firing rate"). Ex.1003, ¶154.

duration of the 'off' periods (i.e., ***increasing the emitter firing rate***) relates to an increased sampling rate." Ex.1011, 35:27-31. Thus, Lisogurski teaches that as the sample rate increases, the firing rate of the LED also increases. Ex.1003, ¶¶155-56.

Lisogurski also teaches that the sampling rate and LED firing rate can be varied for the same reasons that light brightness is varied. Ex.1011, 35:7-9 ("the earlier described embodiments relating to varying light output may also apply to sampling rate"). A skilled person would have recognized that a light source must originally have an initial firing rate ("*initial pulse rate*") so the system can later increase it. Ex.1003, ¶153. One reason these parameters are varied is to improve the signal-to-noise ratio; as it states "[t]he system may ***increase the brightness of the light sources*** in response to the noise ***to improve the signal-to-noise ratio***." Ex.1011, 9:46-52. Lisogurski also explains that increasing the sampling rate "may result in more accurate and reliable physiological information." Ex.1011, 33:56-58. Thus, Lisogurski teaches that the system can increase the LED firing rate ("*pulse rate*") to increase signal-to-noise ratio. Ex.1003, ¶156.

As noted above (§VI.A.4), Patent Owner may contend that Lisogurski does not explicitly teach that increasing a pulse rate of one or more LEDs increases the signal-to-noise ratio.

Initially, Lisogurski clearly identifies the importance of increasing the signal-to-noise ratio in its scheme. Ex.1011, 9:50-52 ("The system may… improve the signal-to-noise ratio."); Ex.1003, ¶158. It also explains that one reason to do this is to offset the effect of "noise, patient motion, or ambient light." *Id.*, 9:57-60. This is consistent with the knowledge of the skilled person, who would understand that measurement quality ultimately derives from the quality of the signal being analyzed, and that noise such as ambient light diminishes that signal quality. Ex.1003, ¶158. That person thus would have been motivated to consider additional ways of improving the signal-to-noise ratio when considering implementing Lisogurski. Ex.1003, ¶¶80, 158-60.

Carlson teaches one such way of improving signal-to-noise ratios, including to deal with the same problems of ambient light identified in Lisogurski. Ex.1003, ¶¶158-59. As it explains, pulsing the LEDs reduces the effects of ambient light including sunlight. Ex.1009, [0067]-[0069]. Carlson teaches that the pulse frequency ("*pulse rate*") is "chosen in such a way that it is outside the frequency spectrum of sunlight and of ambient light" and it could be "1000 Hz" or "can be chosen at any other frequency, as e.g. 2000 Hz or even higher." Ex.1009, [0069]; Ex.1003, ¶159. Figure 8 of Carlson shows increasing the operating frequency F_0 of the LEDs as compared to Fig. 7c. Ex.1009, [0069]. This change in frequency, which corresponds to increasing the "*pulse rate*" of the emitter, increases

"significantly the Signal-to-Noise and Signal-to-Background ratio." Ex.1009, [0069]; Ex.1003, ¶159.

Thus, to the extent a skilled person would not have recognized from Lisogurski alone that one can increase signal-to-noise by increasing the firing rate of its LEDs, doing so would have been obvious in view of Carlson. Ex.1003, ¶157. Both references identify the same problem – ambient light – and the need to offset its negative impact on the signal-to-noise ratio. Ex.1003 ¶¶158-61; Ex.1011, 9:46-60; Ex.1009, [0067]-[0069]. Lisogurski also can readily be modified based on Carlson to increase the firing rate to increase signal-to-noise, given that Lisogurski teaches that the firing rate of the LEDs can be adjusted in response changes in environmental conditions, such as changes in background noise or ambient light. Ex.1011, 1:67-2:3, 5:55-61 ("Conventional servo algorithms may adjust the light drive signals due to, for example, ambient light changes"), 9:46-60, 37:6-18.

Consequently, a skilled person would have found it obvious to configure Lisogurski to increase the LED firing rate (frequency), given that Carlson teaches that increasing the modulation frequency improves the signal-to-noise ratio. Ex.1009, [0069]; Ex.1003, ¶¶160-61. In this combined system, a skilled person would have recognized that the LEDs must have an original operating frequency ("*initial pulse rate*") so the system can later increase it. Ex.1003, ¶159.

The skilled person also would have recognized that configuring Lisogurski to increase the signal-to-noise ratio by increasing the LED firing rate would have been a predictable arrangement of known elements, with each performing the same function it was known to perform and yielding what one would expect from the arrangement. Ex.1003, ¶162.

i) "the detection system further configured to generate a first signal responsive to light while the light emitting diodes are off"

Lisogurski teaches a "dark subtraction" technique for "remov[ing] ambient and background signals." Ex.1011, 13:60, 6:7-10; Ex.1003, ¶163; *see generally*, Ex.1011, 6:7-19, 13:60-14:10, 16:33-54 (describing dark subtraction process). Using this technique, the detectors measure the light when the LEDs are on and when the LEDs are off to remove "dark current" or ambient light from the signal. Ex.1011, 12:59-13:6 ("The peaks of detector current waveform 214 may be synchronous with light 'on' periods… The valleys… may be synchronous with periods of time during which no light is being emitted … [D]ark current 222 may be removed…").

Lisogurski explains that "the system [may] turn[] on a first light source, followed by a 'dark' period, followed by a second light source, followed by a 'dark' period." Ex.1011, 6:12-15. "The system may measure the ambient light

detected by the detector during the 'dark' period…" Ex.1011, 6:16-19; Ex.1003, ¶164.

The detectors and front end processing circuitry measure a "dark signal" by "determining the amount of dark signal during [each] 'off' period 220"—in other words, it measures the light while the LEDs are off. Ex.1011, 13:67-14:6; Ex.1003, ¶165. To determine the dark signal, each detector "converts the intensity of the received light into an electrical signal." Ex.1011, 11:14-16; *see* Ex.1011, 13:35-41. The dark signal 222 (also called dark current 222) is measured during dark period 220, and is depicted in Figures 2A and 2B, annotated below:

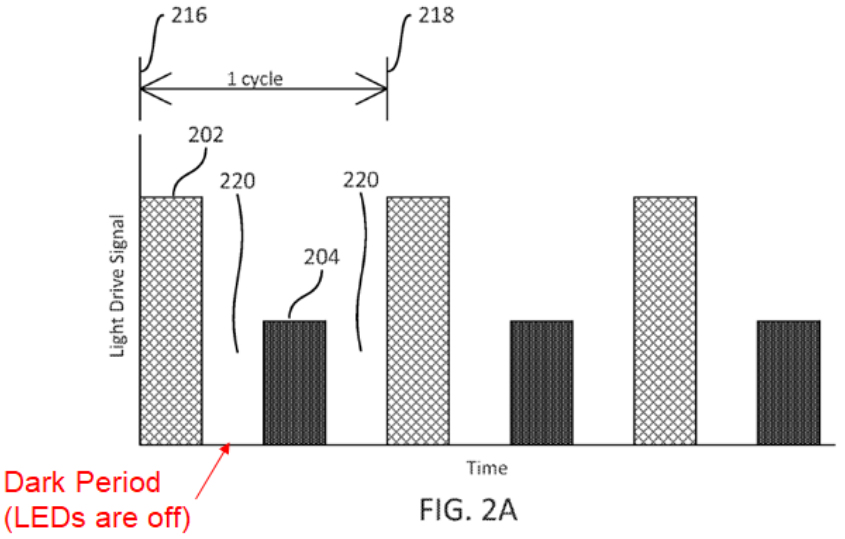

FIG. 2A

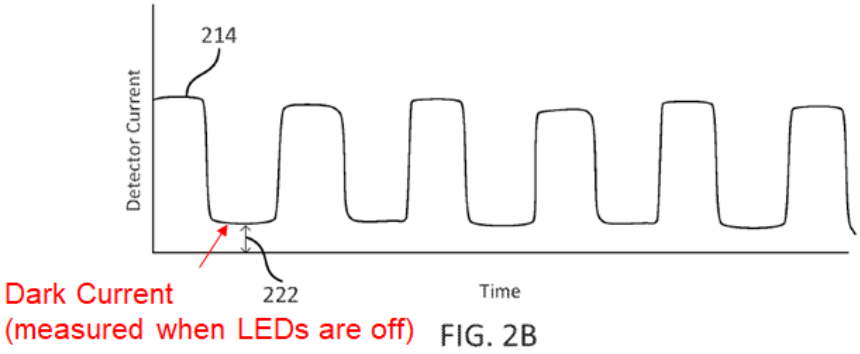

FIG. 2B

Ex.1003, ¶165; Ex.1011, Figs. 2A (current used to illuminate the LEDs) & 2B (the current output by the detector), 12:64-13:6; *see id.*, 13:67-14:6. The front end processing circuitry uses the current measured when the LEDs are off to generate a "dark signal." Ex.1011, 13:35-41 ("Demultiplexer 156 may… generate… a ***first dark signal***…, and ***a second dark signal***…"); Ex.1003, ¶166.

Therefore, Lisogurski teaches capturing light during a dark period ("*while the light emitting diodes are off*") and converting that to a dark signal ("*first signal*"). Ex.1003, ¶167.

j) "[the detection system further configured to] generate a second signal responsive to light received while at least one of the light emitting diodes is on"

In the dark signal subtraction process, Lisogurski's detectors and front end processing circuitry also measure the signal while at least one LED is on such that they capture a portion of the optical beam reflected from tissue. Ex.1003, ¶168.

As explained above with respect to the previous element, "the system [may] turn[] on a first light source, followed by a 'dark' period, followed by a second light source, followed by a 'dark' period." Ex.1011, 6:12-15. "The system may measure… ***the signals received during the first and second 'on' periods***." Ex.1011, 6:16-19; *see* Ex.1003, ¶168.

The system will measure a red signal, Ex.1011, 13:67-14:2 ("a detection signal peak corresponding to red 'on' period 202") and an IR signal, Ex.1011,

16:52-53 ("the levels received during… IR 'on' period 278."). *See* Ex.1011, 11:14-16 (each detector "convert[s] the intensity of the received light into an electrical signal"), 13:35-41 ("Demultiplexer 156 may… generate ***a Red signal*** [and] ***an IR signal***…"); Ex.1003, ¶170. This is depicted in Figures 2A and 2B, annotated below:

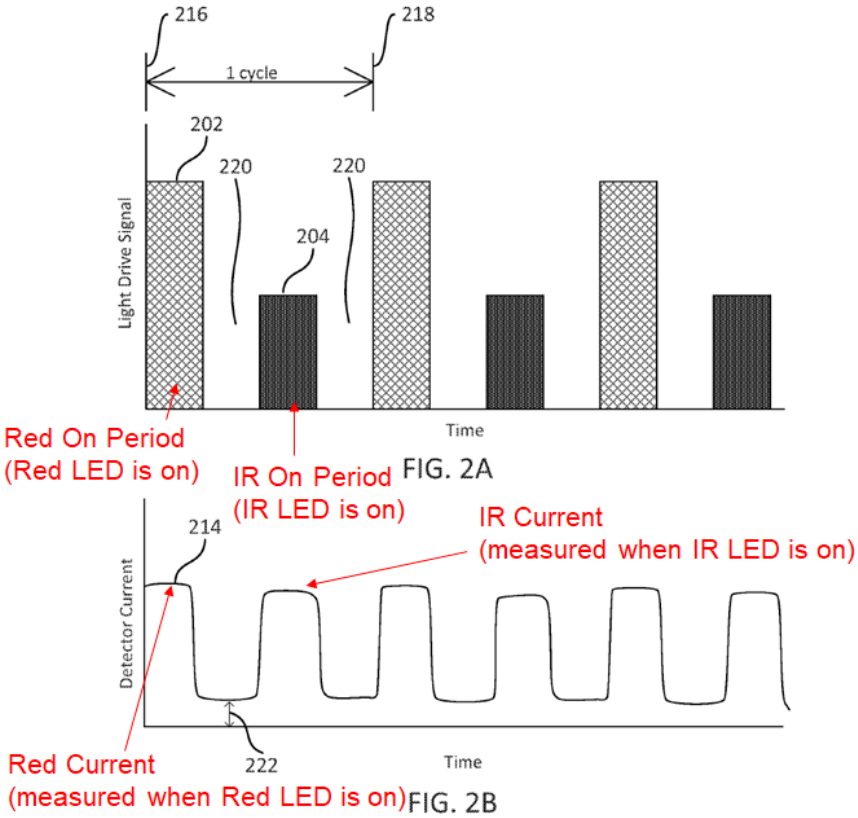

Ex.1003, ¶170; Ex.1011, Figs. 2A & 2B, 12:52-13:6.

The light received by the detectors includes "the light that is reflected by or has traveled through the subject's tissue." Ex.1011, 17:40-42; *id.*, 11:12-20 ("[L]ight may enter detector 140 after passing through the subject's tissue… ***The light intensity may be directly related to the*** absorbance and/or ***reflectance of light***

in the tissue.”). This includes the IR light emitted by the LEDs. Ex.1011, 17:8-10 (“the levels received during… IR ‘on’ period 278.”), 13:35-41.

Therefore, Lisogurski teaches capturing light when one of the IR LEDs is on (“*while at least one of the light emitting diodes is on*”) and converting that to an electrical signal (“*second signal*”). Ex.1003, ¶170.

k) “[the detection system further configured] to increase the signal-to-noise ratio by differencing the first signal and the second signal”

Lisogurski describes the ambient light in the signal as noise. Ex.1011, 14:46-55 (discussing “ambient light noise” in the analog signals). Lisogurski explains that the dark subtractor subtracts the digital dark signal from the IR signals to generate an “adjusted… IR signal[]”:

> [D]ark subtractor 162 ***may subtract dark values from the Red and IR components to generate adjusted Red and IR signals***. For example, dark subtractor 162 ***may determine a subtraction amount from the dark signal*** portion of the detection signal and subtract it from the peak portion of the detection signal in order to reduce the effect of the dark signal on the peak.

Ex.1011, 13:60-14:10; *id.*, 16:51-54 (“The system may subtract the background or dark level from the levels received during red ‘on’ portion 274 and IR ‘on’ period 278.”). Thus, Lisogurski teaches subtracting (“*differencing*”) the dark signal (“*first signal*”) from the IR signal (“*second signal*”). Ex.1003, ¶¶171-72. As explained

above (§VI.A.5.d.2), the IR signal "*includ[es] at least a portion of the optical beam reflected from the tissue*."

Because the dark signal subtraction process removes noise (ambient light) from the IR signal, a POSA would have understood that it increases the signal-to-noise ratio. Ex.1003, ¶146. The signal-to-noise ratio is calculated by dividing the signal power by the noise power: $\frac{S}{N}$. Ex.1003, ¶173. Decreasing the noise necessarily increases the signal-to-noise ratio. *Id.*

6. Comparison of Dependent Claims to Lisogurski and Carlson

a) Dependent Claim 11

Claim 11 depends from claim 7 and specifies "*wherein the detection system comprises a plurality of spatially separated detectors*."

Lisogurski's sensor includes "[o]ne or more detector 318…." Ex.1011, 17:40-42; *see also id.*, 11:9-10; Figs. 1 (140), 3 (318). The sensor "may include multiple… detectors, which may be spaced apart." Ex.1011, 17:43-45. Each detector "convert[s] the intensity of the received light into an electrical signal." Ex.1011, 11:14-16; 11:20-22; Figs. 1, 3. Thus, Lisogurski teaches "*a plurality of spatially separated detectors*." Ex.1003, ¶175.

b) Dependent Claim 12

Claim 12 depends from claim 11 and specifies "*wherein at least one of the spatially separated detectors is located at a distance from a first one of the light*

emitting diodes and a different distance from a second one of the light emitting diodes, and is configured to generate a third signal responsive to light from the first light emitting diode and a fourth signal responsive to light from the second light emitting diode."

Lisogurski teaches using multiple light sources and multiple detectors "which may be spaced apart." Ex.1011, 17:43-45. It also states that "[a]ny suitable configuration" of sources and detectors maybe used. Ex.1011, 17:39-45.

There are just two options for how a detector can be spaced in relation to two LEDs: either it is the same distance from each LED or it is different distances from it. Ex.1003, ¶177. A skilled person reading the indication in Lisogurski that the sensors can be spaced apart would have immediately envisioned both options. *Id.*; *Kennametal, Inc. v. Ingersoll Cutting Tool Co.*, 780 F.3d 1376, 1381 (Fed. Cir. 2015) (a reference can anticipate a claim even if it "d[oes] not expressly spell out" all the limitations arranged or combined as in the claim, if a person of skill in the art, reading the reference, would "at once envisage" the claimed arrangement or combination); *see In re Petering*, 301 F.2d 676, 681 (CCPA 1962). Thus,

Lisogurski discloses that each LED can be a different distance from a photodetector.[9]

Lisogurski explains that "in a system with two light sources… the first light source may be a high efficiency infrared (IR) LED while the one or more additional light sources may be lower efficiency red LEDs." Ex.1011, 7:38-8:3. Lisogurski separately measures the signal from each LED, and it does so repeatedly over time. Ex.1011, 12:29-33, Figs. 2A and 2B. Thus, a person of ordinary skill would have understood that Lisogurski's photodetector detects a red signal from the red LED ("*a third signal responsive to light from the first light emitting diode*") and an infrared signal from the infrared LED ("*a fourth signal responsive to light from the second light emitting diode*"). Ex.1003, ¶180.

c) Dependent Claims 13

Claim 13 depends from claim 12 and specifies "*wherein the output signal is generated in part by comparing the third and fourth signals*."

As explained for claim 12 above, a person of ordinary skill would have understood that Lisogurski's photodetector detects a red signal from the red LED

---

[9] At the very least, this configuration would have been obvious. There are just two choices for how to space the LEDs from the detector, and the selection of one of those two ways is a simple design choice. Ex.1003, ¶¶178-79.

("*the third signal*") and an infrared signal from the infrared LED ("*the fourth signal*"). Lisogurski also teaches using red and infrared LEDs "because it has been observed that highly oxygenated blood will absorb relatively less red light and more IR light than blood with a lower oxygen saturation. *By comparing the intensities of two wavelengths* at different points in the pulse cycle, it is possible to estimate the blood oxygen saturation of hemoglobin in arterial blood." Ex.1011, 4:45-51, 45:6-22 (showing calculation). A skilled person would have understood that this comparison can be done, for example, by calculating blood oxygen saturation using the ratio-of-ratios calculation, which is the ratio of the measured IR signal to the measured red signal. Ex.1011, 4:45-56, 45:6-22; Ex.1019, 769-70; Ex.1003, ¶182. Thus, Lisogurski teaches generating an output signal by comparing the detected infrared signal ("*third signal*") and the detected red signal ("*fourth signal*"). Ex.1003, ¶182.

B. <u>Ground 2</u>: Lisogurski, Carlson, and Mannheimer Render Obvious Claims 12-13

As explained above, Lisogurski and Carlson, render obvious all of the elements of claims 7 and 11. Omni may contend that these references do not teach LEDs that are spaced different distances from an emitter. Even if this distinction were accepted, claims 12-13 are still unpatentable based on Lisogurski and Carlson in combination with Mannheimer.

1. Overview of Mannheimer

Mannheimer discloses a pulse oximetry monitoring and measurement system. Ex.1008, 6:17-36, Figs. 2, 4. It includes a sensor that uses one or more LEDs to alternately emit red and infrared light. Ex.1008, 6:19-21, 6:66-7:4. The emitted light is dispersed by the user's tissue, and the reflected light is collected by one or more detectors. Ex.1008, 6:22-23; Ex.1003, ¶187. Mannheimer teaches use of emitters that are spaced at different distances from a detector in order to obtain deep and shallow tissue measurements. Ex.1008, 1:40-54, 2:1-6, 3:25-35, Figs. 1B, 7. For example, Mannheimer includes an embodiment with two LEDs each spaced a different distance from a single detector. Ex.1008, Fig. 1B, 3:38-40, 5:58-62. In this way, reflected light from a surface layer of skin, which is non-vascular and susceptible to noise from motion and ambient light, can be removed so that light reflected by deeper, more vascular tissues layers can be used to identify a pulsatile signal of interest. Ex.1003, ¶188; Ex.1008, 3:25-35, 5:1-5.

2. A Skilled Person Would Have Modified Lisogurski and Carlson to Incorporate Elements Shown in Mannheimer

As described for Ground 1, a skilled person reading Lisogurski (and Carlson) would have looked to other references that disclosed additional techniques for improving the operation of optical sensing systems. *See* §VI.A.3. It was part of the ordinary design process to look for ways to improve the operation of a device by looking to complementary designs and techniques. Ex.1003, ¶189.

Lisogurski recognizes that light is attenuated differently depending on the tissue, and that skin pigmentation in particular can have an adverse effect on signal quality. Ex.1011, 19:42-50 ("The interaction of the emitted light with the subject may cause the light to become attenuated… [T]he attenuation or the light may depend on… the tissue with which the light interacts."), 44:43-48 ("The red waveforms may be 25% of the intensity of the IR waveforms, as may occur in patients with dark skin pigmentation"). Mannheimer describes a solution to this problem, teaching that interference from skin can be removed by using signals detected from LEDs spaced different distances from a detector. Ex.1003, ¶190; Ex.1008, 3:25-35, 5:1-5.

A skilled person would have looked to Mannheimer for the additional reason that it teaches how to position emitters at different distances relative to a detector. Ex.1003, ¶191. While Lisogurski teaches using multiple light sources and multiple detectors "which may be spaced apart," Ex.1011, 17:45, it does not specifically identify the spacing that should be used. A skilled person would have looked to other prior art for guidance on how to arrange LEDs with respect to a sensor, one example of which is described in Mannheimer. Ex.1003, ¶191.

Lisogurski, Carlson, and Mannheimer are also analogous references, each describing techniques for improving the measurements taken by optical sensing devices, such as pulse oximeters. Ex.1003, ¶192. The skilled person would have

considered the references together when implementing a system based on Lisogurski's teachings. Ex.1003, ¶¶192-93.

a) Claim 12

As explained above, Lisogurski discloses claim 12. Patent Owner may argue that Lisogurski does not disclose a detector that is a different distance from each of two LEDs and that generates a "*third*" and "*fourth*" signal. As explained below, that feature is obvious based on Lisogurski, Carlson, and Mannheimer.

(1) A detector located at "*different distances*" from each LED

Fig. 1B of Mannheimer shows emitters E_1 and E_2 and detector D. Ex.1008, 5:58-62.

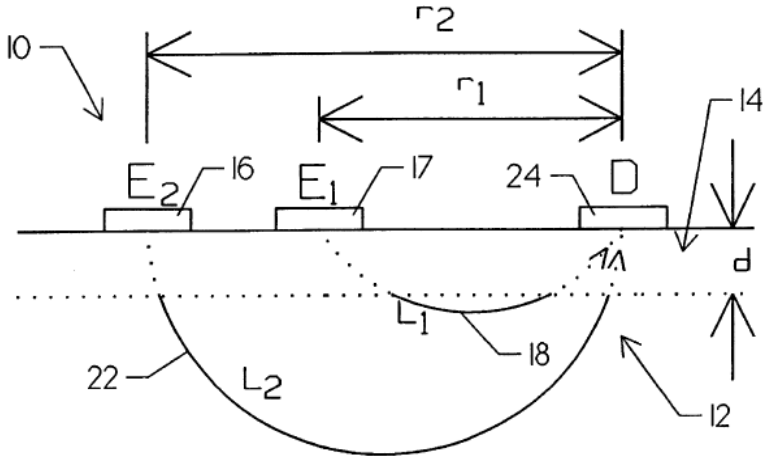

FIG. 1 B

Emitter E_1 is located a first distance r_1 from the detector. Ex.1008, 3:23; Ex.1003, ¶197. Emitter E_2 is located a second, greater distance r_2 from the detector.

Ex.1008, 3:24; Ex.1003, ¶197. The detector receives light signal 18 from emitter E_1 that has a path length L_1, (Ex.1008, 3:18-21; Ex.1003, ¶197), and light signal 22 from emitter E_2 that has a path length L_2 that is greater than L_1, (Ex.1008, 3:19-22; Ex.1003, ¶197).

A skilled person would have found it obvious to arrange Lisogurski's emitters and detectors in the manner described by Mannheimer. Ex.1003, ¶198. Lisogurski teaches using multiple light sources and multiple detectors "which may be spaced apart." Ex.1011, 17:45. It also indicates that "[a]ny suitable configuration" of sources and detectors maybe used. Ex.1011, 17:39-45. A skilled person considering how to implement the Lisogurski system would have considered other prior art for guidance, and by so doing, would have considered Mannheimer, which provides extensive guidance on how to configure emitters and detectors being used in optical sensing. Ex.1003, ¶¶198-99. That person would have been particularly motivated by the benefits identified in Mannheimer, including that its configuration allows for removing the effects of light reflected by a surface layer of skin so that a signal of interest can be extracted from a deeper tissue layer. Ex.1003, ¶199; Ex.1008, 3:25-35, 5:1-5. A skilled person thus would have been motivated to arrange the Lisogurski emitters relative to the detector as taught by Mannheimer to remove interference caused by a person's skin, which Lisogurski recognizes can be a problem. Ex.1003, ¶199.

Thus, the combined system of Lisogurksi, Carlson, and Mannheimer teaches this element.

(2) A detector "*generat*[*ing*]" both a "*third*" and "*fourth*" signal

Mannheimer teaches "calculating an arterial oxygen saturation level of [a] patient" from the intensity of signals 18 and 22. Ex.1008, 2:16-18. This calculation includes determining a first intensity I_1 corresponding to the signal 18 from E_1 and a second intensity I_2 corresponding to the signal 20 from E_2. Ex.1008, 3:35-54, 4:15-20. For each wavelength of light used (λ_1, λ_2), Mannheimer then teaches calculating a ratio R from I_1 and I_2 to calculate "a result related only to the arterial blood saturation of…deeper tissue." Ex.1008, 3:55-5:9; *see also* Ex.1008, 5:23-57 (providing an alternative calculation for the ratio R based on I_1 and I_2). Thus, Mannheimer separately performs this calculation for red light and for IR light. Mannheimer therefore teaches comparing a red signal 18 (the "*third signal*") reflected by surface tissue and a red signal 22 (the "*fourth signal*") reflected by deep tissue in order to subtract the effects of light reflected by the surface tissue. Ex.1003, ¶¶201-02.

It would have been obvious for a skilled person to configure Lisogurski to perform the comparison as described by Mannheimer to remove noise caused by the surface layer of skin. Ex.1003, ¶203. Lisogurski recognizes that light is attenuated differently depending on the tissue, and that skin pigmentation in

particular can have an adverse effect on signal quality. Ex.1011, 19:42-50 44:43-48. This adverse effect can be mitigated by implementing Mannheimer, which removes light reflected by the surface layer of skin. Ex.1003, ¶203. A skilled person would be motivated to implement the comparison described by Mannheimer in the system of Lisogurski in order to increase a signal-to-noise ratio and provide an improved measurement device. *Id.*

Thus, the combination of Lisogurski, Carlson, and Mannheimer teaches this element.

b) Claims 13

Claim 13 specifies "*wherein the output signal is generated in part by comparing the third and fourth signals*." As explained above (*see* §VI.B.2.a)(1)), a skilled person would have found it obvious to configure the Lisogurski sensor to perform the comparison in the manner described by Mannheimer (*i.e.*, comparing a red signal 18 (the "*third signal*") reflected by surface tissue and a red signal 22 (the "*fourth signal*")) to remove the noise caused by the surface layer of skin. Ex.1003, ¶204. A skilled artisan would have recognized that the resulting signal would have been an "*output signal*" without this noise. Ex.1003, ¶204.

C. Ground 3: Lisogurski, Carlson, and Park (with or without Mannheimer) Render Obvious Claims 10 and 14

a) Overview of Park

Park describes a wearable device for measuring physiological data of a user. Ex.1010, Figs. 2, 15-16; Abstract, 1:34-53, 6:41-55.

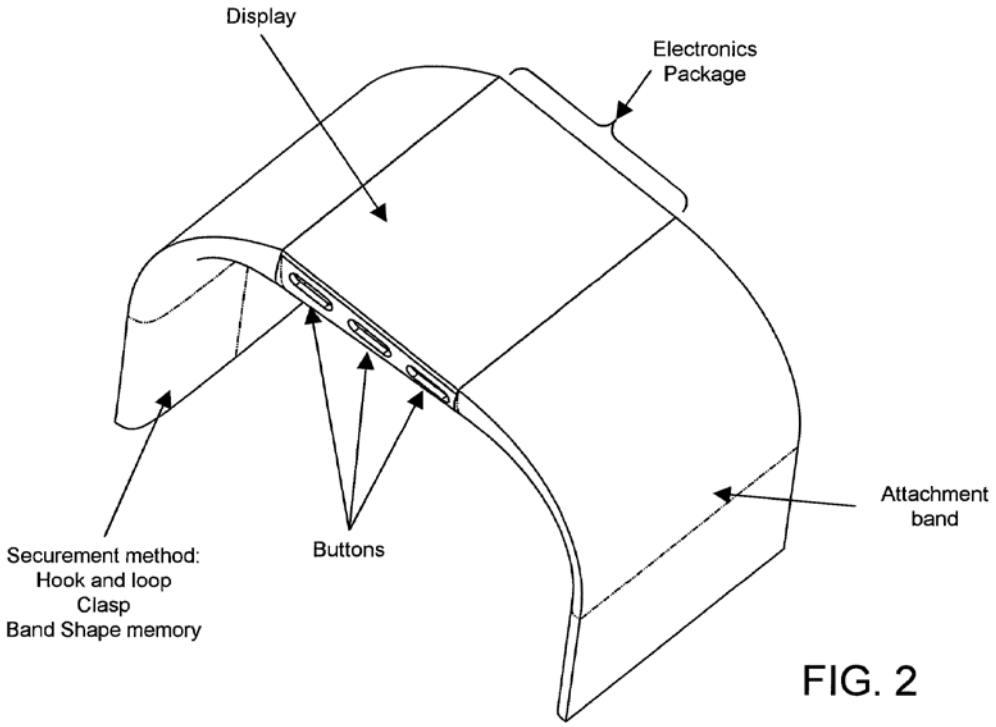

FIG. 2

The device has an optical sensor that directs light at the user's tissue and then detects reflected light representing physiological data. Ex.1010, 6:42-55. It includes conventional components, such as LED emitters (6:49), photodetectors (6:50-51), and lenses and a reflective surface (11:32-42, 11:58-12:8).

Park teaches several techniques that increase the signal-to-noise ratio ("SNR") of the signals measured by its devices while minimizing power

consumption. For example, Park describes techniques for acquiring quality data in the presence of noise, particularly caused by motion. Ex.1010, 7:4-7, 11:4-16, 11:32-44, 12:31-67, 14:20-15:62, 16:8-20. Park also explains that its device can have an interior side made of material with a "high reflective characteristic – such as polished stainless steel, reflective paint, and polished plastic" thereby "improving the SNR." *Id.*, 15:49-57 .

b) A Skilled Artisan would combine Lisogurski, Carlson, and Park

A skilled person would have considered the systems described in Lisogurski in conjunction with those described in Carlson and Park, as both concern analogous miniaturized wireless puloximetry devices having the same applications (*e.g.*, mobile monitoring of pulse and other physiological characteristics of a person). Ex.1003, ¶209; Ex.1010 (Park), 10:39-43.

As explained for Ground 1 above, Lisogurski describes a PPG system that is designed to optimize power consumption, (Ex.1011, 1:4-6, 3:50-53, 4:63-67), and increase the battery life of a wearable sensor, *e.g.*, one worn on a wrist, Ex.1011, 1:16-18, 4:15-20, 17:51-58. Lisogurski teaches several techniques for increasing the signal-to-noise ratio of measured signals while minimizing power consumption. Ex.1011, 9:46-52. These teachings would motivate a skilled person to look for other techniques for achieving the same objectives, as this was part of the natural design process. Ex.1003, ¶¶210-11.

This would have led a skilled person to Park (Ex.1010). Ex.1003, ¶212. For example, Park describes configuring an optical sensor to maximize optical coupling and minimize relative motion between the device and the user's skin, thereby improving SNR while also reducing power consumption. Ex.1010, 11:32-44, 12:31-67, 14:4-65, 14:66-15:24. These techniques, which include using light guiding elements, "increase the quality of the cardiac signal of interest" and "improve measurement accuracy…by reducing motions of the sensor relative to the user's skin during operation, especially whilst the user is in motion." Ex.1010, 14:20-27, 14:58-65, 15:49-62. Park's device also may have interior side made of material with a "high reflective characteristic – such as polished stainless steel, reflective paint, and polished plastic." Ex.1010, 15:49-54. As Park further explains, this design feature would improve SNR. Ex.1010, 15:53-55 ("In this way, light scattered/reflected off skin side of the device may be scattered/reflected back into the skin in order to, for example, improve SNR."); *see also id.*, 15:55-16:7.

Lisogurski and Park are analogous systems with common applications and utility; both describe techniques for improving the power consumption of wearable optical sensing devices while improving their performance and utility. Ex.1003, ¶209. The skilled person would have considered the references together when implementing a system based on Park's teachings. *Id.*

c) Dependents Claim 10 and 14

Claims 10 depends from claim 7 and specifies "*a reflective surface configured to reflect at least a portion of light reflected from the tissue.*" Claim 14 depends from claim 13 and likewise specifies "*a reflective surface positioned to reflect at least a portion of light reflected from the tissue*."

Park describes using a light pipe or other "light transmissive structure" to direct light reflected from the user's tissue towards a detector. Ex.1010, Fig. 10, 11:32-39. Park explains that this light transmissive structure can be comprised of an optically opaque material that is "reflective to a specific wavelength range so as to more efficiently transport light… from the user's body back to and detected by the detector…." Ex.1010, 11:58-12:8. Moreover, the biometric monitoring device "may include a material disposed on the skin or interior side which includes high reflectivity characteristic—for example, polished stainless steel, reflective paint, and polished plastic. In this way, light scattered/reflected off the skin side of the device may be scattered/reflected back into the skin in order to, for example, improve the SNR." Ex.1010, 15:49-57. Thus, Park discloses at least two "*reflective surfaces*" corresponding to this claim limitation. Ex.1003, ¶219.

A skilled person would have been motivated to implement the reflective surface described by Park in the combined system of Lisogurski and Carlson (with or without Mannheimer). As explained by Park, using a reflective surface helps

increase a signal-to-noise ratio. Ex.1010, 15:53-55. This guidance alone would have motivated a skilled artisan to make the modification above, especially in light of Lisogurski's express goal to improve signal-to-noise ratio. Ex.1011, 6:3-6, 9:49-60, 13:60-14:10, 14:40-55, 37:6-20; Ex.1003, ¶¶219-20. The skilled person also would have recognized that adding a reflective surface to Lisogurski as Park teaches would achieve that objective as doing so would be known to improve signal measurement efficiency and complement operation of the Lisogurski system. Ex.1003, ¶¶219-20; *see* Ex.1009, 15:53-55.

Moreover, the skilled person also would have been familiar with the material and/or coatings described by Park (Ex.1010 15:49-53) that reflect light and would have been able to integrate them into Lisogurski with routine effort. Ex.1003, ¶221. A skilled person thus would consider the addition of a reflective surface to Lisogurski's sensor to be a predictable arrangement of known elements, with each performing the same function it was known to perform and yielding what one would expect from the arrangement.

D. No Secondary Considerations Exist

As described above, the combination of Lisogurski and Carlson, with or without Mannheimer or Park render the challenged claims of the '299 patent obvious. No secondary indicia of non-obviousness exist having a nexus to the putative "invention" of these claims contrary to that conclusion. Petitioner

reserves its right to respond to any assertion of secondary indicia of non-obviousness advanced by Patent Owner.

VII. Conclusion

Apple respectfully submits that there is a reasonable likelihood that Apple will prevail in establishing the challenged claims are unpatentable, and requests that Trial be instituted.

Dated: December 11, 2019

Respectfully submitted,

/Jeffrey P. Kushan/
Jeffrey P. Kushan
Registration No. 43,401
Sidley Austin LLP
1501 K Street NW
Washington, DC 20005
jkushan@sidley.com
(202) 736-8914
Lead Counsel for Petitioner

Ching-Lee Fukuda
Reg. No. 44,334
Sidley Austin LLP
787 Seventh Avenue
New York, NY 10019
clfukuda@sidley.com
(212) 839-7364

Thomas A. Broughan III
Reg. No. 66,001
Sidley Austin LLP
1501 K Street NW
Washington, DC 20005
tbroughan@sidley.com
kcover@sidley.com
(202) 736-8314

Backup Lead Counsel for Petitioner

Claim Appendix

Independent claim 7 and its dependent claims are shown below:

7. A system for measuring one or more physiological parameters comprising:

a light source comprising a plurality of semiconductor sources that are light emitting diodes, each of the light emitting diodes configured to generate an output optical beam having one or more optical wavelengths, wherein at least a portion of the one or more optical wavelengths is a near-infrared wavelength between 700 nanometers and 2500 nanometers;

a lens configured to receive a portion of at least one of the output optical beams and to deliver a lens output beam to tissue;

a detection system configured to receive at least a portion of the lens output beam reflected from the tissue and to generate an output signal having a signal-to-noise ratio, wherein the detection system is configured to be synchronized to the light source;

a personal device comprising a wireless receiver, a wireless transmitter, a display, a microphone, a speaker, one or more buttons or knobs, a microprocessor and a touch screen, the personal device configured to receive and process at least a portion of the output signal, wherein the personal device is configured to store and display the processed output signal, and wherein at least a portion of the processed output signal is configured to be transmitted over a wireless transmission link;

a remote device configured to receive over the wireless transmission link an output status comprising the at least a portion of the

processed output signal, to process the received output status to generate processed data, and to store the processed data;

wherein the output signal is indicative of one or more of the physiological parameters, and the remote device is configured to store a history of at least a portion of the one or more physiological parameters over a specified period of time;

the system configured to increase the signal-to-noise ratio by increasing light intensity of at least one of the plurality of semiconductor sources from an initial light intensity and by increasing a pulse rate of at least one of the plurality of semiconductor sources from an initial pulse rate; and

the detection system further configured to:

generate a first signal responsive to light while the light emitting diodes are off,

generate a second signal responsive to light received while at least one of the light emitting diodes is on, and

increase the signal-to-noise ratio by differencing the first signal and the second signal.

10. The system of claim 7, further comprising a reflective surface configured to reflect at least a portion of light reflected from the tissue.

11. The system of claim 7 wherein the detection system comprises a plurality of spatially separated detectors.

12. The system of claim 11 wherein at least one of the spatially separated detectors is located at a distance from a first one of the light emitting diodes and at a different distance from a second one of the light emitting diodes, and is configured to generate a third signal responsive to light from the first light emitting diode and a fourth signal responsive to light from the second light emitting diode.

13. The system of claim 12 wherein the output signal is generated in part by comparing the third and fourth signals.

14. The system of claim 13 further comprising a reflective surface positioned to reflect at least a portion of light reflected from the tissue.

CERTIFICATE OF COMPLIANCE

I hereby certify that this brief complies with the type-volume limitations of 37 C.F.R. §42.24, because it contains 13,977 words (as determined by the Microsoft Word word-processing system used to prepare the brief), excluding the parts of the brief exempted by 37 C.F.R. §42.24.

Dated: December 11, 2019

Respectfully submitted,

/Jeffrey P. Kushan/
Jeffrey P. Kushan
Reg. No. 43,401
SIDLEY AUSTIN LLP
1501 K Street NW
Washington, DC 20005
Attorney for Petitioner

CERTIFICATE OF SERVICE

I hereby certify that on this 11th day of December, 2019, copies of this Petition for *Inter Partes* Review, Attachments and Exhibits have been served in its entirety by Federal Express on the following counsel of record for Omni:

David Bir
Brooks, Kushman P.C./Cheetah
Omni MedSci
1000 Town Center
Twenty Second Floor
Southfield, MI 48075

Dr. Mohammed N. Islam
Omni MedSci, Inc.
1718 Newport Creek Drive,
Ann Arbor, Michigan 48103

Honigman LLP
c/o Sarah Waidelich
315 E Eisenhower Pkwy
Ann Arbor, MI 48108

Regents of Michigan
Office of Technology Transfer
c/o Richard Brandon
1600 Huron Pkwy, Building 520,
2nd Floor
Ann Arbor, MI 48109-2590

Thomas A. Lewry
John S. LeRoy
Robert C. Tuttle
John M. Halan
Christopher C. Smith
Brooks, Kushman P.C./Cheetah
Omni MedSci
1000 Town Center
Twenty Second Floor
Southfield, MI 48075

Dated: December 11, 2019

Respectfully submitted,

/Jeffrey P. Kushan/
Jeffrey P. Kushan
Reg. No. 43,401
SIDLEY AUSTIN LLP
1501 K Street NW
Washington, DC 20005
Attorney for Petitioner