UNITED STATES PATENT AND TRADEMARK OFFICE

BEFORE THE PATENT TRIAL AND APPEAL BOARD

SAMSUNG ELECTRONICS CO., LTD., SAMSUNG ELECTRONICS AMERICA, INC., FOSSIL GROUP, INC., FOSSIL STORES I, INC., FOSSIL PARTNERS, L.P., OURA HEALTH OY, AND ONEPLUS TECHNOLOGY (SHENZHEN) CO., LTD.,

Petitioners,

v.

OMNI MEDSCI, INC.,

Patent Owner.

U.S. Patent No. 10,874,304

Case No. IPR2025-01251

DECLARATION OF IGOR EFIMOV, PH.D.

TABLE OF CONTENTS

Page

I. BACKGROUND AND QUALIFICATIONS 2
II. MATERIALS CONSIDERED 11
III. LEGAL STANDARDS 16
A. Level of Ordinary Skill in the Art 17
B. Claim Construction 17
C. Anticipation 19
D. Obviousness 20
E. Dependent Claims 24
IV. LEVEL OF SKILL IN THE ART 25
V. OVERVIEW OF THE ’304 PATENT 26
VI. PROSECUTION HISTORY OF THE ’304 PATENT 35
VII. CHALLENGED CLAIMS 35
VIII. CLAIM CONSTRUCTION 36
A. Prior Constructions of the Board 36
B. Petitioners’ Constructions in the Texas Case 37
IX. OVERVIEW OF ASSERTED GROUNDS AND REFERENCES IN THE PETITION 39
A. Petitioners’ Obviousness Grounds 39
B. Summary of Asserted References 40
1. Lisogurski (Ex. 1025) 41
2. LeBoeuf (Ex. 1026) 43
3. Tran (Ex. 1027) 45
4. Carlson (Ex. 1028) 45
5. Marbach (Ex. 1029) 47
X. OPINIONS ON GROUNDS IN THE PETITION 47
A. Ground 1: Obviousness Based on Lisogurski (Claims 1, 3, 11, 19, 20) 48

Omni MedSci Ex. 2053
WHOOP, Inc. v. Omni MedSci - IPR2025-01584

B. Ground 2: Obviousness Based on Lisogurski and LeBoeuf (Claims 2, 4-6, 14-16, 21-22, 27).....48

1. Claims 2, 14, and 27.....48

2. Claims 4-6, 15-16, and 21-22.....72

C. Ground 3: Obviousness Based on Lisogurski and Tran (Claims 1, 3, 11-13, 19, 20, 26).....96

D. Ground 4: Obviousness Based on Lisogurski, LeBoeuf, and Tran (Claims 2, 4-6, 12-16, 21-22, 26-27).....103

E. Ground 5: Obviousness Based on Lisogurski and Carlson (Claims 1, 3, 11, 19, 20).....104

F. Ground 6: Obviousness Based on Lisogurski, LeBoeuf, and Carlson (Claims 2, 4-6, 14-16, 21-22, 27).....104

G. Ground 7: Obviousness Based on Lisogurski, Tran, and Carlson (Claims 1, 3, 11-13, 19, 20, 26).....105

H. Ground 8: Obviousness Based on Lisogurski, LeBoeuf, Tran, and Carlson (Claims 2, 4-6, 12-16, 21-22, 26-27).....106

I. Ground 9: Obviousness Based on Lisogurski, Tran, and Marbach (Claims 1, 3, 11-13, 19, 20, 26).....107

J. Ground 10: Obviousness Based on Lisogurski, Tran, Carlson, and Marbach (Claims 1, 3, 11-13, 19, 20, 26).....108

XI. CONCLUSION.....109

Omni MedSci Ex. 2053
WHOOP, Inc. v. Omni MedSci - IPR2025-01584

I, Igor Efimov, declare as follows:

1. I make this declaration based upon my own personal knowledge and, if called upon to testify, would testify competently to the matters stated herein.

2. I have been retained on behalf of Omni MedSci, Inc., ("Omni" or "Patent Owner") as an independent expert to provide this declaration concerning the technical subject matter relevant to U.S. Patent No. 10,874,304 ("the '304 Patent") (Ex. 1001) in connection with an *inter partes* review ("IPR") petition filed by Samsung Electronics Co. Ltd., Samsung Electronics America Inc., Fossil Group, Inc., Fossil Stores I, Inc., Fossil Partners, L.P., Oura Health Oy, and OnePlus Technology (Shenzhen) Co., Ltd. ("Petitioners").

3. I am being compensated at my standard hourly rate of $700 per hour for the time I spend on this matter. My compensation is not based on the content of my opinions or the resolution of this matter, and I have no financial or other interest in this proceeding.

4. I understand that Omni is asserting the '304 Patent against Samsung Electronics Co., Ltd., and others, in a related matter currently pending in the United States District Court for the Eastern District of Texas (the "Texas Case").

5. I also understand that Omni is asserting the '304 Patent against Whoop, Inc., in a related matter currently pending in the United States District Court for the District of Delaware ("the Delaware Case").

6. In this declaration, I offer opinions relating to the ’304 Patent, claim construction, the references in the Petition, and the declaration of Petitioners’ expert Dr. Anthony. The substance and bases of my opinions appear below.

I. BACKGROUND AND QUALIFICATIONS

7. In formulating my opinions, I have relied on my knowledge, training, and experience in the relevant field, which I will summarize briefly herein.

8. I am currently a Professor of Biomedical Engineering and a Professor of Medicine (Division of Cardiology) at Northwestern University, Chicago, Illinois. Prior to my tenure at Northwestern University, I was the Alisann and Terry Collins Professor of Biomedical Engineering at The George Washington University, Washington, D.C., where I also served as Founding Chair of the Department of Biomedical Engineering from 2015 to 2019. Before that, from 2004 to 2015, I served as the Lucy & Stanley Lopata Distinguished Professor of Biomedical Engineering at Washington University, in Saint Louis, Missouri. I was also a Professor of Medicine, Professor of Radiology, and Professor of Cell Biology & Physiology at the Washington University School of Medicine. I also served on the faculty of the Department of Cardiology of the Cleveland Clinic Foundation (1994-2000) and the Department of Biomedical Engineering of Case Western Reserve University (2000-2004), Cleveland, Ohio.

9. My research focuses on the physiological mechanisms of cardiovascular disease and the development of diagnostic and therapeutic bioelectronics for heart rhythm disorders, heart failure, and vascular dysfunction. My laboratory develops implantable, wearable, and optical sensing and imaging systems for real-time physiological diagnostics and device-based therapy. These systems incorporate semiconductor light sources, photodiodes, and spectroscopic analysis.

10. I received my Master of Science degree in experimental nuclear physics from the Moscow Institute of Physics and Technology, USSR, in 1986. In 1992, I received a Ph.D. in Biophysics from the Moscow Institute of Physics and Technology after completing a doctoral study on the mechanisms of sudden cardiac death due to ventricular arrhythmias. I completed my postdoctoral training in 1992-1994 in the fields of fast fluorescent imaging / optical mapping, cardiac electrophysiology, and arrhythmia at the University of Pittsburgh in Pittsburgh, Pennsylvania. Then, I started my independent cardiac research career in the Department of Cardiology at the Cleveland Clinic Foundation (1994-2000), where I established an NIH-funded laboratory. Cleveland Clinic has been consistently ranked the #1 Cardiology program nationwide by U.S. News & World Report since 1994.

11. For the past 25 years, I have taught undergraduate and graduate courses in Biomedical Engineering, including courses relating to quantitative physiology, applied bioelectricity, biomedical optics, biosignal acquisition and analysis, light-tissue interaction, physiology of the heart, introduction to biomedical engineering, clinical cardiovascular engineering, and cardiovascular engineering and technology. In these and other courses, I taught sections on engineering and physiological principles of cardiac electrophysiology, arrhythmia, and electrocardiography. Many of my trainees are currently working at leading national medical device companies, including Medtronic, Abbott, and Boston Scientific, developing novel cardiac antiarrhythmic therapies, diagnostics, and sensing devices.

12. I have also mentored over 30 clinical fellows and postdoctoral research fellows, many of whom are currently professors, cardiologists, cardiac and vascular surgeons, and clinical engineers throughout the national and world Universities and hospitals, including Harvard University, MA; University of California, CA; Ohio State University, OH; University of Wisconsin, WI; University of Fukuoka, Japan; University of Bordeaux, France; University of Brno, Czech Republic; Imperial College London, UK; etc.

13. I have published a book in 2009 on cardiac bioelectric diagnostics and therapy (Efimov I.R., Kroll, M.W., Tchou, P.J., Eds., Cardiac Bioelectric Therapy: Mechanisms and Practical Implications, Springer, 2009. ISBN 978-0-387-79402- 0),

and I have published a second updated edition of this book in 2021 (Efimov I.R., Ng F.S., Laughner J.I., Eds., Cardiac Bioelectric Therapy: Mechanisms and Practical Implications, Springer, 2nd Edition. 2021. ISBN 978-3-030-63354-7). These volumes address optical imaging technology and electrophysiological principles of diagnosis and therapy, providing novel approaches to the treatment of cardiac arrhythmias using implantable devices, percutaneous ablation therapies, machine learning, and other approaches.

14. Most of my 300+ peer-reviewed publications focus on cardiac electrophysiology, biomedical optics, device development, the physiological mechanisms of cardiac arrhythmias, and their diagnostics and therapy. In collaboration with Professor John A. Rogers from Northwestern University, we have developed a novel implantable, interventional, and wearable electronics platform for monitoring cardiac electrophysiology, optical image mapping, diagnosis of heart rhythm disorders due to brady- and tachyarrhythmias, and antiarrhythmic therapy. Several high-impact publications have been published on that subject recently in leading scientific journals. For example, our recent paper on novel bioresorbable electronics platform (Choi YS, Yin RT, Pfenniger A, Koo H, Avila R, Lee KB, Chen SW, Lee G, Li G, Qiao Y, Murillo-Berlioz A, Kiss A, Han S, Lee SM, Li C, Xie Z, Chen YY, Burrell A, Geist B, Jeong H, Kim J, Yoon HJ, Banks A, Kang SK, Zhang ZJ, Haney CR, Sahakian AV, Johnson D, Efimova T, Huang Y, Trachiotis GD,

Knight BP, Arora RK, Efimov IR, Rogers JA. Fully implantable and bioresorbable cardiac pacemakers without leads or batteries. Nature Biotechnology, June 28, 2021, https://doi.org/10.1038/s41587-021-00948-x.) was featured by over 150 international news outlets reaching at least 12 million listeners/viewers from 5 continents, including PBS, Guardian, and NIH Research Matters (NIH Director's office online publication).

15. Another 2025 publication in Nature (Zhang Y, Rytkin E, Zeng L, Kim JU, Tang L, Zhang H, Mikhailov A, Zhao K, Wang Y, Ding L, Lu X, Lantsova A, Aprea E, Jiang G, Li SG Seo, Wang T, Wang J, Liu J, Gu J, Liu F, Bailey K, L YFL, Burrell A, Pfenniger A, Ardashev A, Yang T, Liu N, Lyu Z, Purwanto NS, Ying Y, Lu Y, Hoepfner C, Melisova A, Gong J, Jeong J, Choi J, Hou A, Nolander R, Bai W, Jin SH, Ma Z, Torkelson JM, Huang Y, Ouyang W, Arora RK, Efimov IR, Rogers JA. Millimetre-scale, bioresorbable optoelectronic systems for electrotherapy. Nature, 2025, 640 (8057), 77-86.) was recognized among the Best Inventions of 2025 by the Time.

16. I have also delivered 400+ invited lectures at prestigious professional conferences and leading Universities worldwide, most of them on biomedical imaging, semiconductor-based light emission, optical coupling through tissue, wireless control architectures, cardiac arrhythmias and therapy. On 2025/11/09, I presented at the annual sessions of the American Heart Association "New sensors

for the future: bringing dreams to reality." Other presentations in 2025 included "Millimeter-scale Bioresorbable Stimulator (milli-pacemaker)", European Section Meeting of the International Academy of Cardiovascular Sciences. Prague, Czechia, 2025/11/04; "Millimeter-scale Bioresorbable Stimulator", RASA Europe conference, Berlin, Germany, 2025/11/1; "Cardiovascular Conformal Bioresorbable Devices", Abbott, 2025/10/21; "Heart-AI interface: Soft Bioresorbable Devices", Cardiology Grand Rounds, University of Rochester Medical Center, Rochester, NY, 2025/09/10; "Heart-AI interface: novel bioelectronic therapy for heart rhythm disorders", Department of Internal Medicine Grand Rounds at the University of Iowa Carver College of Medicine, Iowa City, IA, 2025/09/04; "Bioelectronics for Neurocardiology: Leducq Foundation Update", Lyric, University of Bordeaux, France, 2025/08/27; "Bioresorbable transient electronics", Abbott, 2025/06/16; "Bioresorbable transient electronics", Heart Rhythm Society, San Diego, CA, 2025/04/27; "Bioresorbable milli-pacemaker: transient arrhythmia therapy", Ralph Lazarra Lecture Award, Heart Rhythm Society, San Diego, CA, 2025/04/24; "Selective p38γ silencing by rationally designed siRNA for mitigating anthracycline cardiotoxicity", Lurie Cancer Center, Feinberg School of Medicine, Northwestern University, Chicago, IL, 2025/04/22; "Transient bioelectronics for cardiovascular tissue engineering and medicine", Department of Biomedical Engineering, University of Alabama at Birmingham, AL, 2025/04/18; "Cardiac bioelectronics for

heart rhythm disorders", Leiden University Medical Center, Leiden, Netherlands, 2025/01/21.

17. I am currently serving a 5-year term as the Editor-in-Chief of Cardiovascular Engineering and Technology, a journal of the Biomedical Engineering Society, published by Springer Nature. I am responsible for reviewing and decision-making of approximately 250-300 manuscripts submitted for publication, including biomedical imaging mapping, cardiac electrophysiology, signal processing, arrhythmia therapy, etc.

18. I have served on the editorial board of the American Journal of Physiology: Heart and Circulatory Physiology and Heart Rhythm Journal, where I manage and make decisions on manuscripts related to biomedical sensing and imaging, cardiac electrophysiology and electrotherapy. I have served or currently am serving on many editorial boards of other leading cardiac journals, where I review papers on biomedical imaging technique, cardiac electrophysiology and arrhythmia. These journals include Circulation Research, Heart Rhythm, Journal of Cardiac Electrophysiology, Journal of Molecular and Cellular Cardiology, American Journal of Physiology, IEEE Transactions in Biomedical Engineering, Experimental Physiology, etc. I regularly review papers on biomedical imaging, cardiovascular physiology and arrhythmia for Nature, Science, Proceedings of the National Academy of Science, Circulation, and other leading journals.

19. I have served on numerous national and international expert panels, which consider grant applications from the leading experts in the field of biomedical optics, diagnostic sensing, cardiac electrophysiology, and defibrillation from many countries, including the USA, the European Union, Canada, the UK, France, Switzerland, Germany, the Netherlands, Russia, Australia, New Zealand, South Africa, Singapore, etc. From 2009-2013, I served as a chartered member of the leading US panel at the National Institutes of Health, the Electrical Signaling, Transporters and Arrhythmia (ESTA) Study section, which is the major funding source for leading US bioinstrumentation investigators. I have also served on many international panels that consider policy, research, and funding decisions in the field of biomedical sensing, cardiac electrophysiology and therapy in numerous countries from most continents. For example, I served on The Expert Panel on the Medical and Physiological Impacts of Conducted Energy Weapons, the Council of Canadian Academies.

20. My research on biomedical imaging and electronics has been funded by the National Heart, Lung, and Blood Institute of the National Institutes of Health and other federal and private foundations without interruptions since 1998, with an average of approximately $1M per year during recent years. I am also funded by the American Heart Association, National Science Foundation, Leducq Foundation, etc.

21. I have been designing and developing medical devices and diagnostic systems for more than twenty-five years. My inventions and patent portfolio include methods for low-voltage cardiac defibrillation, optical and electrical biosensors, cardiac and neural stimulators, and hybrid optoelectronic systems for tissue monitoring and physiological diagnostics. Many of these devices integrate semiconductor light sources, photodetectors, and optical mapping technologies. For example, I am the inventor or co-inventor on several patents and patent applications, including "Systems and Methods for Triple-Parametric Optical Mapping" (U.S. Pat. App. Pub. No. 2023/0085578), "Distributed Neuromorphic Computing for High-Definition Bioelectric Diagnostics and Therapy" (U.S. Patent No. 11,701,002), and "High-Resolution Multi-Function and Conformal Electronics Device for Diagnosis and Treatment of Cardiac Arrhythmias" (PCT/US18/16499). With the support of NIH funding, I have invented a method for low-voltage defibrillation of cardiac arrhythmias by effectively unpinning anatomical reentry (U.S. Patent No. 8,175,702), a method for cardiac pacing using the inferior nodal extension (U.S. Patent No. 8,391,995), and a method and device for low-energy termination of atrial tachyarrhythmias (U.S. Patent No. 8,509,889). I founded Cardialen, Inc. to develop clinical defibrillators based on this method, which received over $30M in venture and NIH funding. Cardialen was acquired in 2022.

22. I have received many awards in recognition of my research and innovation in the field of bioengineering and diagnostic device development. For example, I was elected to the United States National Academy of Inventors in 2019; and I have received the 2021 Distinguished Scientist Award and the 2025 Ralph Lazzara Lectureship Award from the leading clinical cardiac electrophysiology professional association – the Heart Rhythm Society. In 2025, I was elected to the American Academy of Sciences and Letters.

23. A more detailed listing of my credentials is set forth in my curriculum vitae (Ex. 2032).

II. MATERIALS CONSIDERED

24. In forming the opinions set forth herein, I have considered and relied upon my education, knowledge of the relevant field, and my experience. I have also reviewed and considered the ’304 Patent (Ex. 1001) and the ’304 Patent’s file history (Ex. 1002), and at least the following additional materials.

- Petition for *Inter Partes* Review of the ’304 Patent (Paper 1) (“Petition”);
- Declaration of Brian Anthony in Support of Petition for *Inter Partes* Review of U.S. Patent No. 10,874,304 (Ex. 1003);

- Previous Declaration of Brian Anthony in Support of Petition for *Inter Partes* Review of U.S. Patent No. 9,651,533 submitted in IPR2019-00916 (Ex. 1004);
- Petition in *Apple Inc. v. Omni MedSci, Inc.*, IPR2019-00916, Paper 1 (PTAB Apr. 10, 2019) (Ex. 1005);
- Patent Owner Response in *Apple Inc. v. Omni MedSci, Inc.*, IPR2019-00916, Paper 23 (PTAB Jan. 31, 2020) (Ex. 1006);
- Institution Decision in *Apple Inc. v. Omni MedSci, Inc.*, IPR2019-00916, Paper 16 (PTAB Oct. 18, 2019) (Ex. 1007);
- Final Written Decision in *Apple Inc. v. Omni MedSci, Inc.*, IPR2019-00916, Paper 39 (PTAB Oct. 14, 2020) ("'533-FWD") (Ex. 1008);
- *Omni MedSci, Inc. v. Apple Inc.*, No. 21-01229, ECF 69 (Fed. Cir. June 8, 2022) (Ex. 1009);
- Previous Declaration of Brian Anthony in Support of Petition for *Inter Partes Review* of U.S. Patent No. 10,517,484 submitted in IPR2021-00453 (Ex. 1010);
- Petition in *Apple Inc. v. Omni MedSci, Inc.*, IPR2021-00453, Paper 1 (PTAB Jan. 22, 2021) (Ex. 1011);
- Patent Owner Response in *Apple Inc. v. Omni MedSci, Inc.*, IPR2021-00453, Paper 10 (PTAB Nov. 12, 2021) (Ex. 1012);

- Institution Decision in *Apple Inc. v. Omni MedSci, Inc.*, IPR2021-00453, Paper 7 (PTAB Aug. 6, 2021) (Ex. 1013);
- Petitioner Reply in *Apple Inc. v. Omni MedSci, Inc.*, IPR2021-00453, Paper 11 (PTAB Feb. 4, 2022) (Ex. 1014);
- Final Written Decision in *Apple Inc. v. Omni MedSci, Inc.*, IPR2021-00453, Paper 22 (PTAB Aug. 3, 2022) ("'484-FWD") (Ex. 1015);
- Final Written Decision on Remand in *Apple Inc. v. Omni MedSci, Inc.*, IPR2021-00453, Paper 26 (PTAB Feb. 14, 2025) (Ex. 1016);
- *Apple Inc. v. Omni MedSci, Inc.*, No. 23-01034, ECF 44 (Fed. Cir. June 21, 2024) (Ex. 1017);
- *Omni MedSci, Inc. v. Apple Inc.*, 2:18-cv-00134-RWS, Dkt. No. 211 (E.D. Tex. June 24, 2019) (Ex. 1018);
- *Omni MedSci, Inc. v. Apple Inc.*, 2:18-cv-00429-RWS, Dkt. No. 152 (E.D. Tex. Aug. 14, 2019) (Ex. 1019);
- Second Amended Docket Control Order, June 16, 2025. *Omni MedSci, Inc. v. Samsung Electronics Co., Ltd. et al.*, No. 2:24-cv01070-JRG-RSP (E.D. Tex.) (Ex. 1020);
- Defendants' Supplemental Invalidity and Subject Matter Eligibility Contentions, July 18, 2025. *Omni MedSci, Inc. v. Samsung Electronics Co., Ltd. et al.*, No. 2:24-cv-01070-JRG-RSP (E.D. Tex.) (Ex. 1023);

- U.S. Patent No. 9,241,676 ("Lisogurski") (Ex. 1025);
- U.S. Patent Pub. No. 2010/0217102 ("LeBoeuf") (Ex. 1026);
- U.S. Patent No. 8,108,036 ("Tran") (Ex. 1027);
- U.S. Patent Pub. No. 2005/0049468A1 ("Carlson") (Ex. 1028);
- U.S. Patent No. 7,139,076 ("Marbach") (Ex. 1029);
- U.S. Patent No. 8,050,730 ("Zhang") (Ex. 1031);
- U.S. Patent No. 8,821,397 ("Al-Ali") (Ex. 1032);
- U.S. Patent Pub. No. 2011/0237911 ("Lamego") (Ex. 1033);
- U.S. Patent No. 5,942,749 ("Takeuchi") (Ex. 1034);
- U.S. Patent No. 5,822,473 ("Magel") (Ex. 1035);
- U.S. Patent No. 5,592,124 ("Mullins") (Ex. 1036);
- E.F. Schubert, Light-Emitting Diodes (Cambridge Univ. Press, 2nd ed. reprinted 2014) (Ex. 1037);
- Joseph D. Bronzino, The Biomedical Engineering Handbook (1995) (Ex. 1038);
- U.S. Patent No. 8,079,735 ("Vakil") (Ex. 1039);
- U.S. Patent Pub. No. 2012/0197093 ("Valencell-093") (Ex. 1041);
- U.S. Patent No. 8,862,196 ("Lynn") (Ex. 1042);
- U.S. Patent No. 8,412,655 ("Colman") (Ex. 1043);

- U.S. Patent No. 5,511,553 ("Segalowitz") (Ex. 1044);
- U.S. Patent No. 6,801,799 ("Mendelson") (Ex. 1045);
- U.S. Patent No. 6,662,033 ("Casciani") (Ex. 1046);
- U.S. Patent No. 9,239,951 ("Hoffberg") (Ex. 1048);
- U.S. Patent Pub. No. 2007/0194939 ("Alvarez") (Ex. 1049);
- U.S. Patent No. 6,931,269 ("Terry") (Ex. 1051);
- U.S. Patent No. 5,497,769 ("Gratton") (Ex. 1059);
- U.S. Patent No. 5,827,182 ("Raley") (Ex. 1060);
- U.S. Patent No. 7,764,982 ("Dalke") (Ex. 1061);
- U.S. Patent No. 6,343,223 ("Chin") (Ex. 1062);
- W.O. Patent Pub. No. 2000/013003 ("Colvin") (Ex. 1063);
- U.S. Patent No. 5,554,273 ("Demmin") (Ex. 1064);
- U.S. Patent No. 5,953,713 ("Behbehani") (Ex. 1065);
- U.S. Patent No. 6,587,704 ("Fine") (Ex. 1066);
- U.S. Patent No. 6,397,092 ("Norris") (Ex. 1067);
- U.S. Patent No. 5,360,004 ("Purdy") (Ex. 1068);
- U.S. Patent Pub. No. 2006/0184040 ("Keller") (Ex. 1077);
- U.S. Patent No. 9,651,533 ("'533") (Ex. 1081);
- U.S. Patent No. 10,517,484 ("'484") (Ex. 1082);

- Declaration of Brian Anthony in Support of Petition for Inter Partes Review of U.S. Patent No. 9,861,286 submitted in IPR2019-00914 (Ex. 1083);
- Declaration of Jonathan Bradford (Ex. 1084); and
- *Apple Inc. v. Omni MedSci, Inc.*, IPR2019-00916, Paper 10 (PTAB July 22, 2019) (Ex. 1085).

25. I have also considered any materials cited in this declaration to the extent they are not expressly listed above. My review of these materials was informed by my education, my work experience, and my experience designing medical devices.

26. I reserve the right to supplement my opinions or express additional opinions should additional and/or presently unknown information about this matter become known by me at a later date.

III. LEGAL STANDARDS

27. As a technical expert, I am not offering any legal opinions. Rather, I am offering technical assessments and opinions. In rendering my analysis, I have been informed by counsel regarding various legal standards for determining patentability. I have applied those standards in forming my technical opinions expressed in this declaration.

A. Level of Ordinary Skill in the Art

28. I understand that the claims and specification of a patent are addressed to and intended to be read by others of skill in the art to which the patent pertains, or to which the patent is most nearly connected, at the time of the filing of the patent application.

29. I understand that a person of ordinary skill in the art ("POSITA") is a hypothetical person who is presumed to be aware of all of the pertinent art. The person of ordinary skill is not an automaton, and may be able to fit together the teachings of multiple prior art references employing ordinary creativity and the common sense that familiar items may have obvious uses beyond their primary purposes.

30. I understand that multiple factors should be used to decide the skill of the POSITA, including: the types of problems encountered in the art, prior art solutions to those problems, the rapidity with which innovations are made, the sophistication of the technology, and the education level of active workers in the field.

B. Claim Construction

31. The patent claims describe the invention made by the inventor and describe what the patent owner owns and what the owner may prevent others from using. I understand that an independent claim sets forth all the requirements that

must be met to be covered by that claim. I further understand that a dependent claim does not itself recite all of the requirements of the claim but refers to another claim and incorporates all of the requirements of the claim to which it refers.

32. I understand that claim construction is the process by which the scope and meaning of terms used in the claims of a patent is determined. I understand that the goal of this process is to give claim terms the ordinary and customary meaning they would have had to a POSITA at the time of the invention, after reading the patent and its prosecution history.

33. I understand that the patent specification may reveal a special definition given to a claim term by the patentee that differs from the plain and ordinary meaning it would otherwise have to a POSITA. In such cases, I understand that the patentee's definition usually controls.

34. I understand that the prosecution history of a patent can inform the meaning of some claim language and that the prosecution history must be considered when construing the claims.

35. I understand that extrinsic evidence, such as dictionaries, treatises, and expert opinions, may also be considered to understand the technology at issue and the way in which claim terms would be understood by a POSITA in the relevant timeframe.

C. Anticipation

36. I understand that anticipation analysis is a two-step process. The first step is to determine the meaning and scope of the asserted claims. Each claim must be viewed as a whole, and it is improper to ignore any element of the claim. For a claim to be anticipated under U.S. patent law: (1) each and every claim element must be identically disclosed, either explicitly or inherently, in a single prior art reference; (2) the claim elements disclosed in the single prior art reference must be arranged in the same way as in the claim; and (3) the identical invention must be disclosed in the single prior art reference, in as complete detail as set forth in the claim. Where even one element is not disclosed in a reference, the anticipation contention fails. Moreover, to serve as an anticipatory reference, the reference itself must be enabled, i.e., it must provide enough information so that a person of ordinary skill in the art can practice the subject matter of the reference without undue experimentation.

37. I understand that where a prior art reference fails to explicitly disclose a claim element, the prior art reference inherently discloses the claim element only if the prior art reference must necessarily include the undisclosed claim element. Inherency may not be established by probabilities or possibilities. The fact that an element may result from a given set of circumstances is not sufficient to prove inherency.

D. Obviousness

38. I understand that a patent claim is invalid under 35 U.S.C. § 103 only if the differences between the claimed invention and the prior art are such that the subject matter as a whole would have been obvious at the time the invention was made to a person of ordinary skill in that art. An obviousness analysis requires consideration of four factors: (1) scope and content of the prior art relied upon to challenge patentability; (2) differences between the prior art and the claimed invention; (3) the level of ordinary skill in the art at the time of the invention; and (4) the objective evidence of non-obviousness, such as commercial success, unexpected results, the failure of others to achieve the results of the invention, a long-felt need which the invention fills, copying of the invention by competitors, praise for the invention, skepticism for the invention, or independent development.

39. I understand that a prior art reference is proper to use in an obviousness determination if the prior art reference is analogous art to the claimed invention. I understand that a prior art reference is analogous art if at least one of the following two considerations is met. First, a prior art reference is analogous art if it is from the same field of endeavor as the claimed invention, even if the prior art reference addresses a different problem and/or arrives at a different solution. Second, a prior art reference is analogous art if the prior art reference is reasonably pertinent to the

problem faced by the inventor, even if it is not in the same field of endeavor as the claimed invention.

40. Furthermore, I understand that a claim may be obvious in view of a single prior art reference, without the need to combine references, if the elements of the claim that are not found in the reference can be supplied by the knowledge or common sense of one of ordinary skill in the relevant art.

41. I further understand that a reconstructive hindsight approach to this analysis, i.e., the improper use of post-invention information to help perform the selection and combination, or the improper use of the listing of elements in a claim as a blueprint to identify selected portions of different prior art references in an attempt to show that the claim is obvious, is not permitted. In other words, one should avoid using the challenged patent as a guide through the prior art references, combining the right references in the right way so as to achieve the result of the claims at issue. Instead, one must put oneself in the place of a person of ordinary skill at the time the invention was made and consider only what was known before the invention was made and not consider what was only known after the invention was made.

42. I also understand that when considering the obviousness of a patent claim, one must consider whether a teaching, suggestion, or motivation to combine the references exists so as to avoid impermissibly applying hindsight when

considering the prior art. I understand that a teaching, suggestion, or motivation may be found explicitly or implicitly: (1) in the prior art; (2) in the knowledge of those of ordinary skill in the art; or (3) from the nature of the problem to be solved. I also understand that the motivation to combine references may include logic, judgment, and common sense, but that any such motivation to combine references must still avoid the improper application of hindsight or reliance on the patentee's disclosure of his invention as found in the patent specification, drawings, and claims.

43. I understand that it must also be shown that one having ordinary skill in the art at the time of the invention would have had a reasonable expectation that a modification or combination of one or more prior art references would have succeeded.

44. I understand that obviousness should be considered in light of the problems known to the person having ordinary skill in the art and the complexity of the alternatives for solving the problems. That individual elements of the claimed invention are disclosed in the prior art is not alone sufficient to reach a conclusion of obviousness.

45. While certain combinations of the prior art might be "obvious to try," I understand that any obvious to try analysis will not render a patent invalid unless it is shown that the possible combinations are: (1) sufficiently small in number so as to be reasonable to conclude that the combination would have been selected; and (2)

such that the combination would have been believed to be one that would produce predictable and well understood results.

46. I understand that each alleged prior art reference in a proposed obviousness combination must be evaluated in its entirety, i.e., including those portions that would argue against obviousness, and must be considered for everything that it teaches, not simply the described invention or a preferred embodiment. I understand that it is impermissible to pick and choose from any one reference only so much of it as will support a given position to the exclusion of other parts necessary to the full appreciation of what such reference fairly suggests to one skilled in the art, or to ignore portions of the reference that argue against obviousness. I also understand that all of the supposed prior art to be combined as proposed must also be evaluated as a whole and should be evaluated for what they teach in combination as well as separately.

47. I also understand that if the teachings of a prior art reference would lead one skilled in the art to make a modification that would render that prior art device, system, or method inoperable, then such a modification would generally not be obvious. I also understand that if a proposed modification would render the prior art device, system, or method unsatisfactory for its intended purpose, then there is strong evidence that no suggestion or motivation existed at the time of the subject invention to make the proposed modification.

48. I understand that it is improper to combine references where the references teach away from their combination. I understand that a reference may be said to teach away when a person of ordinary skill, upon reading the reference, would be discouraged from following the path set out in the reference, or would be led in a direction divergent from the path that was taken by the applicant. It is also my understanding that the degree of teaching away will depend on the particular facts; in general, a reference will teach away if it suggests that the line of development flowing from the reference's disclosure is unlikely to be productive of the result sought by the applicant. I understand that a reference teaches away, for example, if (1) the combination would produce a seemingly inoperative device, or (2) the references leave the impression that the product would not have the property sought by the applicant or would no longer achieve the intended purpose(s) of the references being modified or combined.

E. Dependent Claims

49. I understand that a dependent claim incorporates each and every limitation of the claim from which it depends. Thus, my understanding is that if a prior art reference or combination of prior art references fails to render obvious an independent claim, then that prior art reference or combination of prior art references also necessarily fails to render obvious all dependent claims that depend from the independent claim.

IV. LEVEL OF SKILL IN THE ART

50. I understand that the level of ordinary skill in the relevant art at the time of the invention is relevant to inquiries such as the meaning of claim terms, the meaning of disclosures found in the prior art, and the reasons one of ordinary skill in the art may have for combining references.

51. I have reviewed the definition of the level of ordinary skill in the art proposed in the Petition, which is:

> On or before the claimed priority date of 12/31/2012, a person of ordinary skill in the art ("POSITA") "would have [had] a good working knowledge of optical sensing techniques and their applications, and familiarity with optical design and signal processing techniques," and would have obtained such knowledge through "an undergraduate education in engineering (electrical, mechanical, biomedical, or optical) or a related field of study, along with relevant experience studying or developing physiological monitoring devices…in industry or academia."

Petition at 13.

52. For purposes of this declaration, I have applied Petitioners' proposed definition in my analysis. I reserve the right to identify a differing level of skill in the art for the '304 Patent should an IPR be instituted.

53. As of the relevant time period of December 2012, I was at least a person of ordinary skill in the art through my education and experience under the definition Petitioners have proposed. I am also familiar with individuals having this level of

skill in the relevant timeframe and am capable of addressing the issues from the perspective of such a person, and I have done so in this declaration.

V. OVERVIEW OF THE ’304 PATENT

54. The ’304 Patent, in some embodiments, provides a comprehensive system for optical measurement and data management, combining optical signal acquisition, processing, wireless transmission, and cloud-based storage and computation to enable non-invasive physiological monitoring and data analytics. Ex. 1001 at Abstract.

55. An exemplary physiological measurement or blood constituent monitoring system is depicted in FIG. 13:

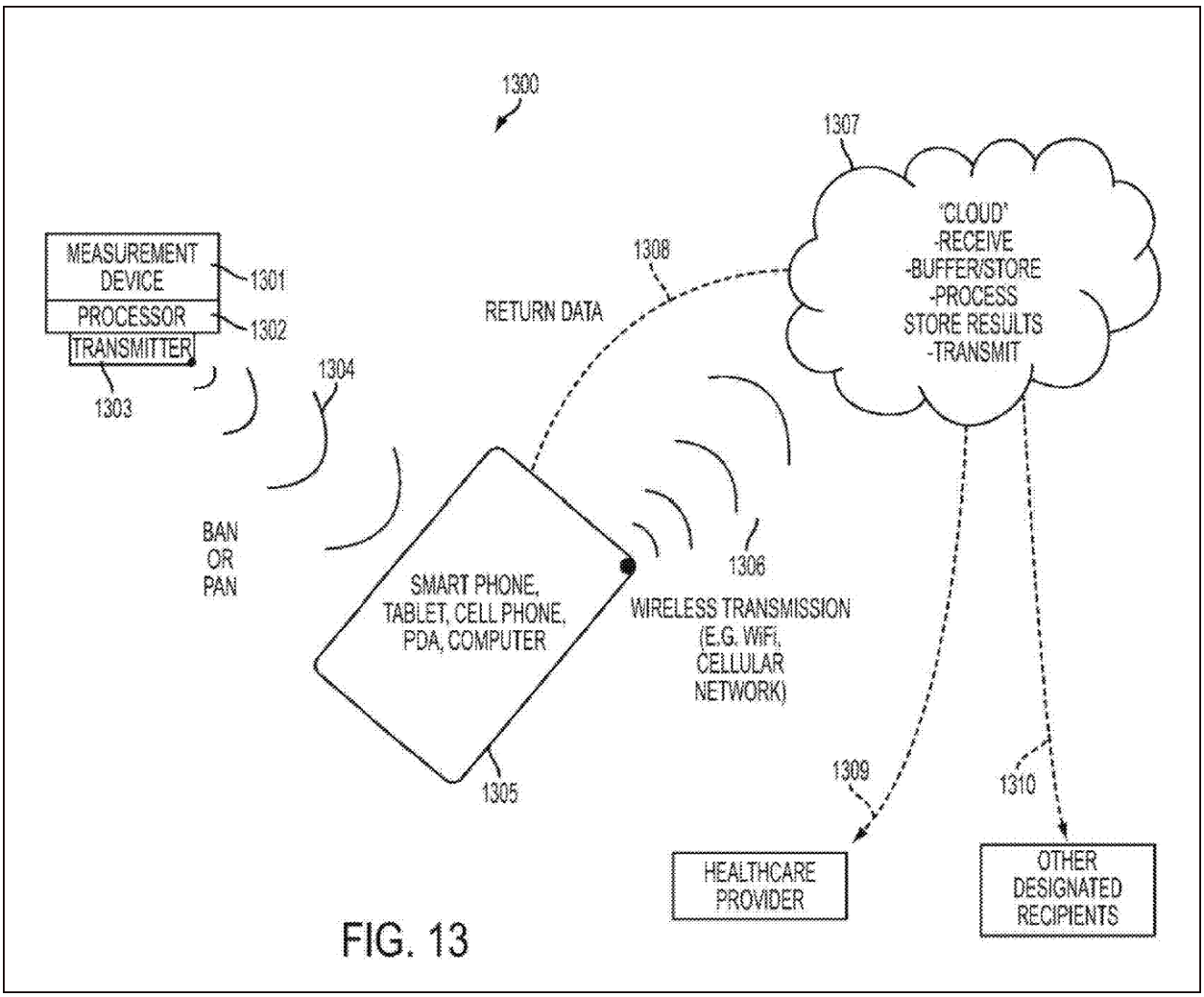

FIG. 13

Ex. 1001 at FIG. 13, 33:45-50; 34:58-61. The exemplary system depicted in Figure 13 includes a measurement device 1301, a personal device 1305 such as a smartphone or tablet, and a cloud server 1307. Ex. 1001 at 33:45-50; 34:58-61.

56. In addition to physiological monitoring, the ’304 Patent describes identification capabilities by applying algorithmic analysis to spectral data acquired from multiple wavelengths. The patent discloses that “pattern matching algorithms and other software and mathematical methods [may be used] to identify the blood

constituents of interest." Ex. 1001 at 35:17-19. It further teaches that "the spectrum may be correlated with a library of known spectra to determine the overlap integrals, and a threshold function may be used to quantify the concentration of different constituents." Ex. 1001 at 35:19-23.

57. The '304 Patent states that "many other constituents in the blood also have signatures in the near-infrared, so spectroscopy and pattern matching, often called spectral fingerprinting, is required to distinguish the glucose with sufficient confidence." Ex. 1001 at 4:58–62. The '304 Patent also explains that the "selection of the constituent of interest may be improved using a number of techniques" including "mathematical modeling and signal processing methodologies," "multiple linear regression, partial least squares, and principal component regression (PCR)." Ex. 1001 at 20:7-17.

58. The '304 Patent further describes identifying other materials and biological constituents using optical techniques in the short-wave infrared (SWIR) range. It explains that "the SWIR covers the wavelength range for nonlinear combinations of stretching and bending modes as well as the first overtone of C–H stretching modes." Ex. 1001 at 20:41–43. "Thus, for example, glucose and ketones among other substances may have unique signatures in the SWIR." Ex. 1001 at 20: 43-45. Moreover, "many solids have distinct spectral signatures in the SWIR, so

particular solids may be identified using stand-off detection or remote sensing." Ex. 1001 at 20: 45-49.

59. The '304 Patent describes a reflective surface. The claims state that "the measurement system further comprises a reflective surface to receive and redirect at least some of the at least a portion of the analysis output beam reflected or transmitted from the sample." Ex. 1001 at 36:60-67. For example, the '304 Patent discloses that as illustrated in FIG. 14B (reproduced below), "the input light may be directed first by a tunable mirror 1451." Ex. 1001 at 31:6-9.

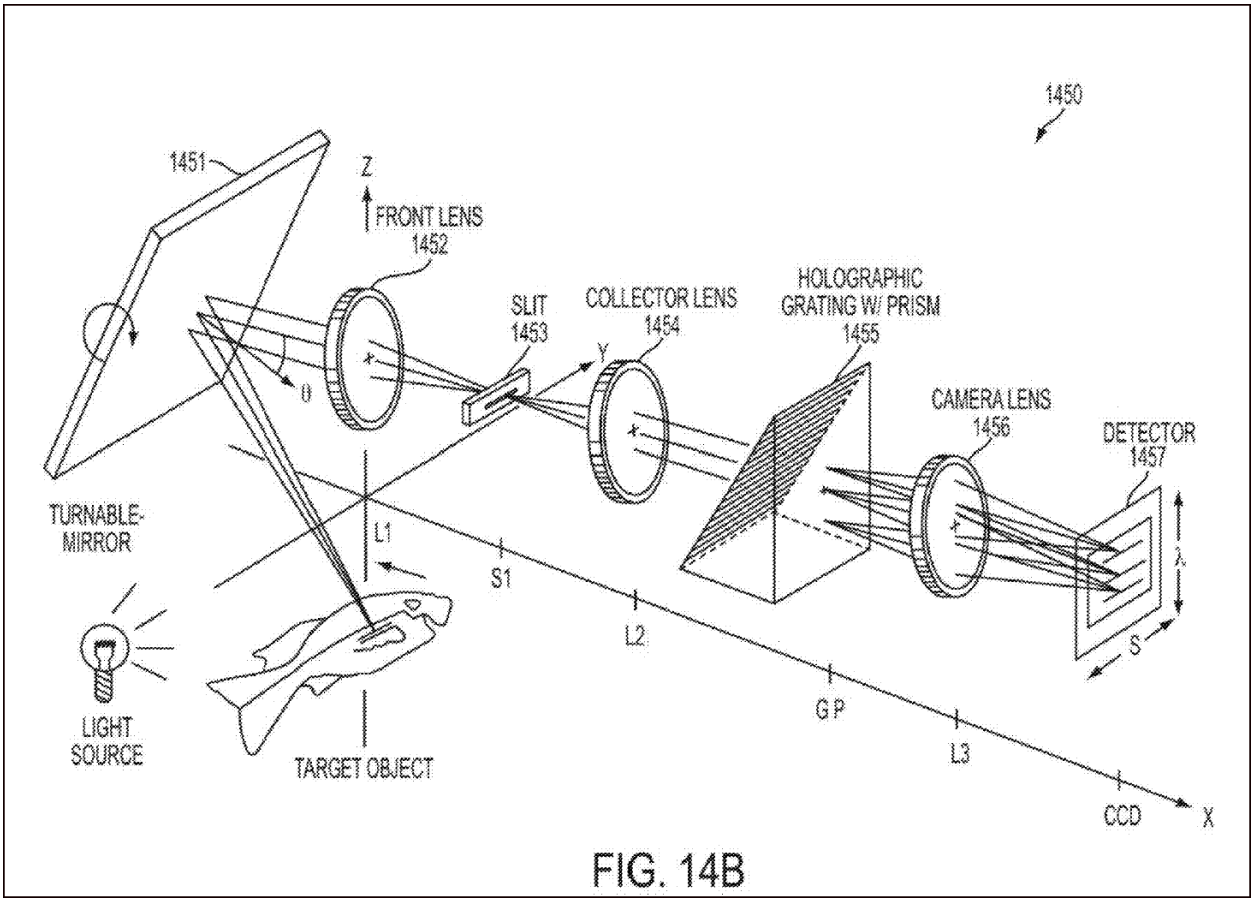

Ex. 1001 at FIG. 14B.

60. The ’304 Patent also specifies a distinct spatial arrangement of light sources and detectors along arcs. Representative claims recite that “the receiver comprises a plurality of detectors arranged along a first arc, and wherein the plurality of semiconductor sources are arranged along a second arc” Ex. 1001 at 37:6-13. As illustrated in FIG. 5B (reproduced below) of the ’304 Patent, as an example, “the mouth guard may have one or more light source input ports 552, 553 and one or more detector output ports 554, 555.”

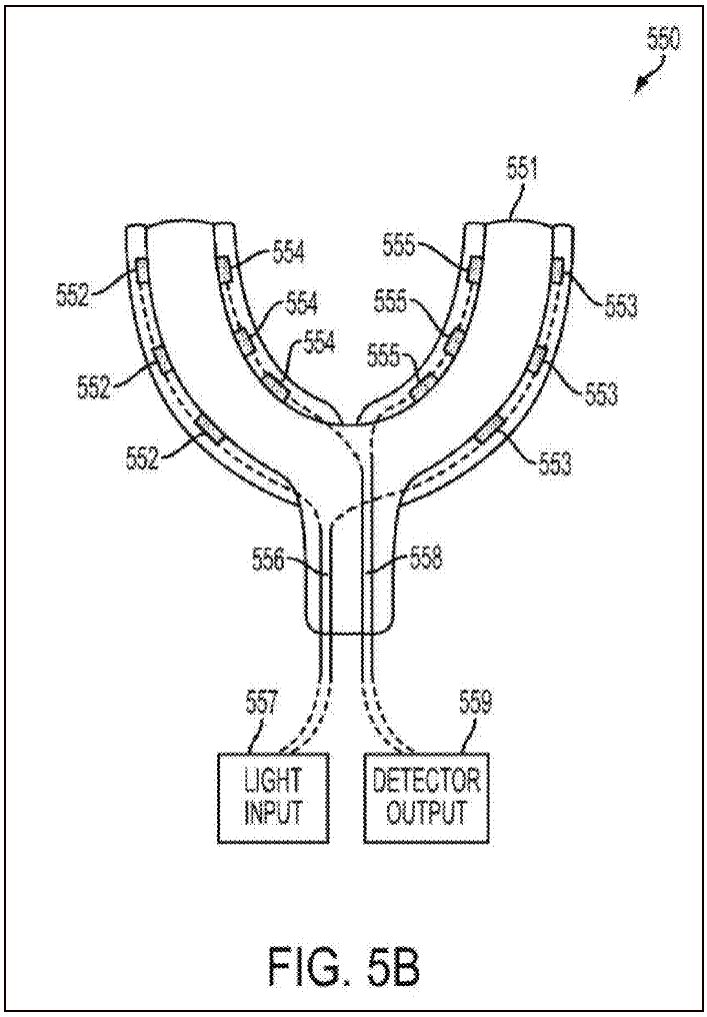

FIG. 5B

Ex. 1001 at FIG. 5B.

61. Independent claims 1, 11, and 19 of the ’304 Patent, which I understand are the challenged independent claims, are reproduced below with the identifiers used in the Petition and Dr. Anthony’s declaration for ease of reference:

[1.pre]	A measurement system comprising:
[1.a]	a light source comprising a plurality of semiconductor sources that are configured to generate an output optical beam with one or more optical wavelengths, the light source configured to increase signal-to-noise ratio by increasing a light intensity relative to an initial light intensity from at least one of the plurality of semiconductor sources;
[1.b]	a measurement device configured to:
[1.c]	receive a portion of the output optical beam, and deliver an analysis output beam to a sample;
[1.d]	a receiver configured to:
[1.e]	receive and process at least a portion of the analysis output beam reflected or transmitted from the sample, and
[1.f]	generate an output signal representing at least in part a non-invasive measurement on blood contained within the sample,
[1.g]	synchronize to the light source,
[1.h]	capture light while the semiconductor sources are off and convert the captured light into a first signal,
[1.i]	capture light while at least one of the semiconductor sources is on and convert the captured light into a second signal, the captured light including at least a part of the at least a portion of the analysis output beam reflected or transmitted from the sample, and
[1.j]	the measurement system further configured to improve the signal-to-noise ratio by differencing the first signal and the second signal;

[1.k]	a smart phone or tablet comprising a wireless receiver, a wireless transmitter, a display, a microphone, a speaker, one or more buttons or knobs, a microprocessor and a touch screen, the smart phone or tablet configured to: receive and process at least a portion of the output signal, store and display the processed output signal, and transmit at least a portion of the processed output signal over a wireless transmission link; and
[1.l]	a cloud configured to:
[1.m]	receive, over the wireless transmission link, an output status comprising the at least a portion of the processed output signal,
[1.n]	process the received output status to generate processed data, and store the processed data.

[11.pre]	A measurement system comprising:
[11.a]	a wearable measurement device for measuring one or more physiological parameters, including a light source comprising a plurality of semiconductor sources that are configured to generate an output optical beam with one or more optical wavelengths;
[11.b]	the light source configured to increase signal-to-noise ratio by increasing a light intensity relative to an initial light intensity from at least one of the plurality of semiconductor sources;
[11.c]	the wearable measurement device configured to receive a portion of the output optical beam and to deliver an analysis output beam to a sample;
[11.d]	the wearable measurement device further comprising a receiver configured to:
[11.e]	receive and process at least a portion of the analysis output beam reflected or transmitted from the sample,
[11.f]	generate an output signal representing at least in part a non-invasive

	measurement on blood contained within the sample,
[11.g]	synchronize to the light source,
[11.h]	capture light while the semiconductor sources are off and convert the captured light into a first signal,
[11.i]	capture light while at least one of the semiconductor sources is on and convert the captured light into a second signal, the captured light including at least a part of the at least a portion of the analysis output beam reflected or transmitted from the sample,
[11.j]	wherein the measurement system is further configured to improve the signal-to-noise ratio by differencing the first signal and the second signal;
[11.k]	a smart phone or tablet comprising a wireless receiver, a wireless transmitter, a display, a microphone, a speaker, one or more buttons or knobs, a microprocessor and a touch screen, the smart phone or tablet configured to receive and process at least a portion of the output signal, to store and display the processed output signal, and to transmit a portion of the processed output signal over a wireless transmission link; and
[11.l]	a cloud configured to receive over the wireless transmission link an output status comprising the at least a portion of the processed output signal, to process the received output status to generate processed data and to store the processed data, and wherein the cloud is capable of storing a history of at least a portion of the received output status over a specified period of time.

[19.pre]	A wearable device for use with a smart phone or tablet, the wearable device comprising:
[19.a]	a measurement device including a light source comprising a plurality of semiconductor sources for measuring one or more physiological parameters,

[19.b]	the measurement device configured to: generate, by modulating at least one of the semiconductor sources having an initial light intensity, an input optical beam having one or more optical wavelengths, and
[19.c]	receive and to deliver a portion of the input optical beam to tissue, wherein the tissue reflects at least a portion of the input optical beam delivered to the tissue;
[19.d]	the measurement device further comprising a receiver configured to: capture light while the semiconductor sources are off and convert the captured light into a first signal, and capture light while at least one of the semiconductor sources is on and convert the captured light into a second signal, the captured light including at least a portion of the input optical beam reflected from the tissue;
[19.e]	synchronize to the modulation of the at least one of the semiconductor sources;
[19.f]	the measurement device further configured to improve a signal-to-noise ratio of the input optical beam reflected from the tissue by: differencing the first signal and the second signal, and
[19.g]	increasing the light intensity relative to the initial light intensity from at least one of the semiconductor sources;
[19.h]	the measurement device further configured to generate an output signal representing at least in part a non-invasive measurement on blood contained within the tissue;
[19.i]	the wearable device configured to communicate with the smart phone or tablet, the smart phone or tablet comprising a wireless receiver, a wireless transmitter, a display, a voice input module, a speaker, and a touch screen; and
[19.j]	the smart phone or tablet configured to: receive and to process at least a portion of the output signal, store and display the processed output signal, and transmit at least a portion of the processed output signal over a wireless transmission link.

Omni MedSci Ex. 2053
WHOOP, Inc. v. Omni MedSci - IPR2025-01584

VI. PROSECUTION HISTORY OF THE ’304 PATENT

62. I have reviewed and analyzed the prosecution history of the ’304 Patent. I understand that the ’304 Patent issued from U.S. Patent Application No. 16/669,794, which was filed on October 31, 2019.

63. I understand that U.S. Patent Application No. 16/669,794 claims priority to U.S. Patent Application No. 14/651,367, which was filed on December 17, 2013 and issued as U.S. Patent No. 9,500,635.

64. I understand that the ’304 Patent also claims priority to: provisional application No. 61/747,477, filed on December 31, 2012; provisional application No. 61/754,698, filed on January 21, 2013; provisional application No. 61/747,472, filed on December 31, 2012; provisional application No. 61/747,553, filed on December 31, 2012; provisional application No. 61/747,485, filed on December 31, 2012; and provisional application No. 61/747,487, filed on December 31, 2012.

65. I understand that Patent Owner disclaimed claims 1, 3, 11, 19, and 20 of the ’304 Patent.

VII. CHALLENGED CLAIMS

66. I understand that the Petition challenges claims 1-6, 11-16, 19-22, and 26-27 of the ’304 Patent. Petition at 8.

67. I am informed and understand that Patent Owner has statutorily disclaimed claims 1, 3, 11, 19, and 20 of the ’304 Patent. Accordingly, I have been

asked to address the remaining challenged claims, which include claims 2, 4-6, 12-16, 21-22, and 26-27 ("the challenged claims")

VIII. CLAIM CONSTRUCTION

68. Petitioners and Dr. Anthony note for patents related to the '304 Patent, certain terms that are "identical to or substantially similar to" language in the challenged claims of the '304 Patent were construed in prior Board or district court proceedings, but otherwise contend that the remaining terms in the challenged claims of the '304 Patent do not require construction and should be afforded their plain and ordinary meaning. Petition at 13-15; Ex. 1003 at ¶¶ 53-67. Unless otherwise noted, I have similarly applied the plain and ordinary meaning of the terms in the '304 Patent as they would be understood by a POSITA.

69. I am informed and understand that Petitioners have proposed certain claim constructions for the '304 Patent in the pending Texas Case. Ex. 2033; Ex. 2034.

A. Prior Constructions of the Board

70. I understand that in a prior IPR involving U.S. Patent No. 9,651,533, which is related to the '304 Patent, the Board construed the term "a light source comprising a plurality of semiconductor sources that are light emitting diodes … configured to increase signal-to-noise ratio by … increasing a pulse rate of at least one of the plurality of semiconductor sources" to mean "a light source containing

two or more light emitting diodes (semiconductor sources), wherein at least one of the light emitting diodes is capable of having its pulse rate increased to increase a signal-to-noise ratio." Ex. 1008 at 10-12.

71. I understand that in a prior IPR involving U.S. Patent No. 10,517,484, which is related to the '304 Patent, the Board construed the term "to identify an object" to mean "to recognize or establish an object as being a particular thing." Ex. 1015 at 8-10; Ex. 1016 at 3.

72. I understand that in a prior IPR involving U.S. Patent No. 9,861,286, which is related to the '304 Patent, the Board construed the term "modulating at least one of the LEDs" to mean "varying the amplitude, frequency, or phase of the light produced by at least one of the LEDs to include information." Ex. 2037 at 10.

73. For purposes of this declaration, I have been asked to apply the Board's constructions for these terms in my analysis of the grounds in the Petition.

B. Petitioners' Constructions in the Texas Case

74. I understand that the parties have proposed an agreed construction for the term "beam" in claims 11, 19, and 20 of the '304 Patent in the Texas Case which is "photons or light transmitted to a particular location in space." The same phrase also appears in claims 1-3, and 14 of the '304 Patent. Claims 1-3 are not asserted in the Texas Case. For purposes of this declaration, I have been asked to apply this construction for this term in my analysis of the grounds in the Petition.

75. I understand that the parties have proposed the following constructions for the terms "modulating" / "modulation" in claim 19 of the '304 Patent in the Texas Case (Ex. 2033; Ex. 2034):

Patent Owner's Construction	Petitioner's Construction
"[vary/varying/the varying of] the amplitude, frequency, or phase of the light produced"	"var[y/ying] the amplitude, frequency, or phase of the light produced by . . . to include information"

76. My opinions regarding Grounds 1-10 as set forth in this declaration would not change regardless of which of the competing constructions noted above is adopted. I reserve the right to update my opinions should the district court or the Board issue claim constructions for these terms/phrases (or any other term or phrase in the '304 Patent).

77. I understand that the parties have proposed the following constructions for the term "modulating at least one of the semiconductor sources having an initial light intensity" in claim 19 of the '304 Patent in the Texas Case (Ex. 2033; Ex. 2034):

Patent Owner's Construction	Petitioner's Construction
No construction necessary apart from the construction of "modulating" / "modulation"	"varying the amplitude, frequency, or phase of the light produced by at least one of the

	semiconductor sources having an initial light intensity to include information"

78. My opinions regarding Grounds 1-10 as set forth in this declaration would not change regardless of which of the competing constructions noted above is adopted. I reserve the right to update my opinions should the district court or the Board issue claim constructions for these terms/phrases (or any other term or phrase in the '304 Patent).

IX. OVERVIEW OF ASSERTED GROUNDS AND REFERENCES IN THE PETITION

A. Petitioners' Obviousness Grounds

79. I understand that Petitioners have challenged claims 1-6, 11-16, 19-22, 26-27 of the '304 Patent as allegedly obvious under 35 U.S.C. § 103 based on ten (10) separate Grounds, as follows (Petition at 8):

Ground	Claims	Asserted Reference(s)				
1	1, 3, 11, 19, 20	Lisogurski				
2	2, 4-6, 14-16, 21-22, 27	Lisogurski	LeBoeuf			
3	1, 3, 11-13, 19, 20, 26	Lisogurski		Tran		
4	2, 4-6, 12-16, 21-22, 26-27	Lisogurski	LeBoeuf	Tran		
5	1, 3, 11, 19, 20	Lisogurski			Carlson	
6	2, 4-6, 14-16, 21-22, 27	Lisogurski	LeBoeuf		Carlson	
7	1, 3, 11-13, 19, 20, 26	Lisogurski		Tran	Carlson	
8	2, 4-6, 12-16, 21-22, 26-27	Lisogurski	LeBoeuf	Tran	Carlson	
9	1, 3, 11-13, 19, 20, 26	Lisogurski		Tran		Marbach
10	1, 3, 11-13, 19, 20, 26	Lisogurski		Tran	Carlson	Marbach

B. Summary of Asserted References

80. I understand that Grounds 1-10 assert various combinations of the following references: "Lisogurski" (Ex. 1025), "LeBoeuf" (Ex. 1026), "Tran" (Ex. 1027), "Carlson" (Ex. 1028), and "Marbach" (Ex. 1029). Petition at 7-8. I understand

that Petitioners' Grounds rely on Lisogurski alone or in various combinations with LeBoeuf, Tran, Carlson, and/or Marbach. Petition at 8.

81. Herein, I refer to these alleged prior art references individually or in various combinations (depending on context) as the "the asserted reference[s]." Below are brief summaries of the asserted references.

1. Lisogurski (Ex. 1025)

82. U.S. Patent No. 9,241,676 ("Lisogurski") describes a non-invasive physiological monitoring system using pulse oximetry to measure blood oxygen saturation and related parameter. Ex. 1025 at 3:61-4:5. The system is illustrated in Figures 3 and 1:

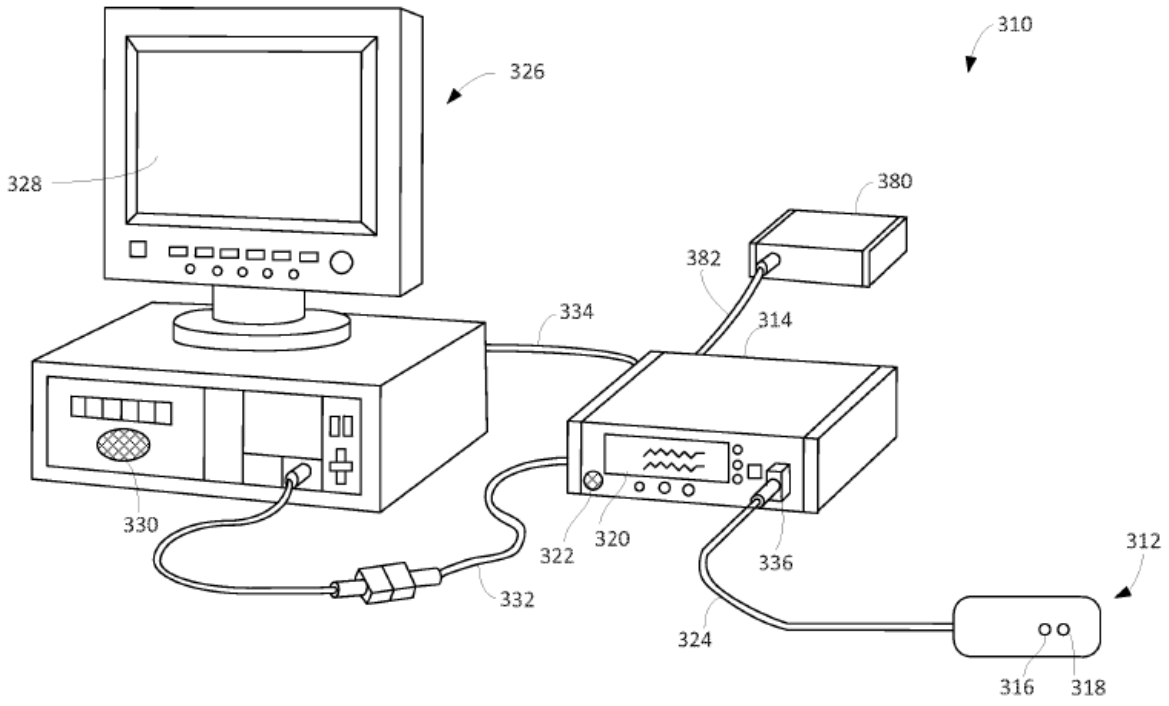

FIG. 3

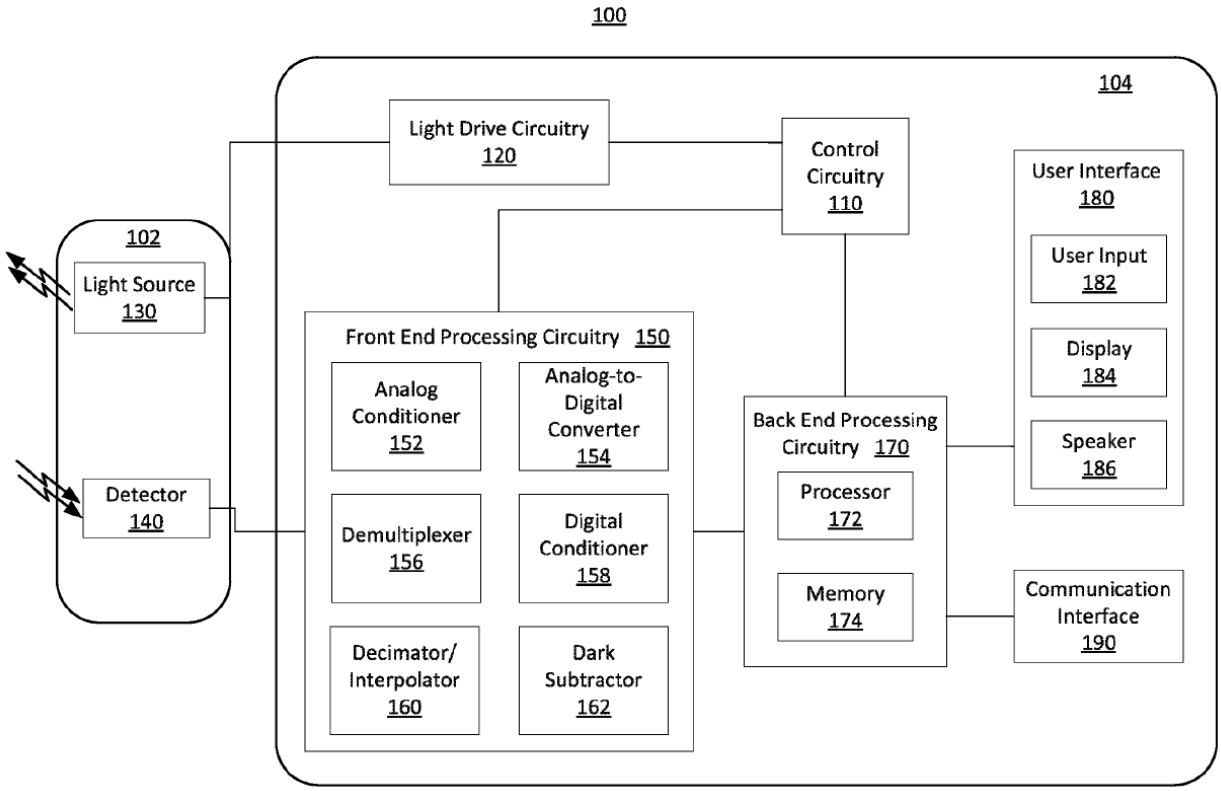

FIG. 1

Ex. 1025 at FIGS. 3, 1. The wearable portion is sensor unit 312, while the other components of the system, such as monitors 314, 326 and calibration device 380, are configured to perform data calculations, display information, and calibrate the system, respectively. Ex. 1025 at 17:54-18:15, 18:32-67.

83. The system uses semiconductor emitters at different wavelengths to illuminate tissue, and a photodetector receives light and converts it into an electrical signal. Ex. 1025 at 4:42-62; 10:48-64. Front end processing circuitry 150 processes the electronic signal. Ex. 1025 at 12:42-49. Then, "[p]rocessor 172 may receive and process physiological signals received from front end processing circuitry 150. For

example, processor 172 may determine one or more physiological parameters based on the received physiological signals." Ex. 1025 at 14:60-64. Based on known differences in wavelength absorption of oxyhemoglobin or deoxyhemoglobin, the system compares the intensities at the different wavelengths to estimate blood oxygen saturation. Ex. 1025 at 24:58-25:5.

2. LeBoeuf (Ex. 1026)

84. U.S. Patent Application Publication No. US 2010/0217102 A1 ("LeBoeuf") describes monitoring devices and particularly light-guiding earbuds to be positioned within an ear. Ex. 1026 at Abstract, [0002], [0006], [0009], [0084]. For example, one such light-guiding earbud embodiment is shown in Figure 3:

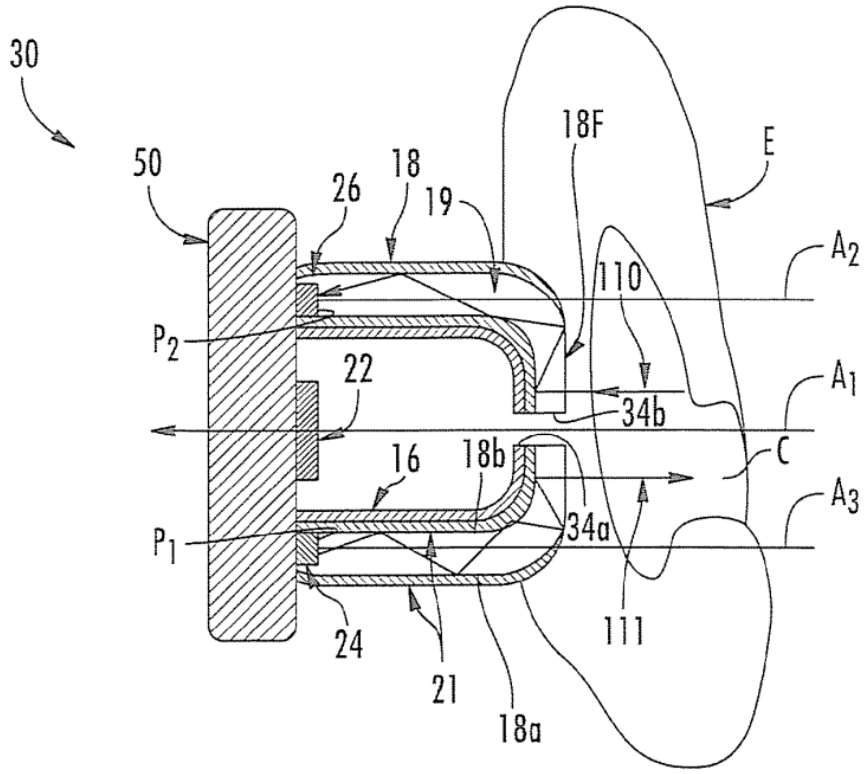

FIG. 3

Ex. 1026 at FIG. 3, [0042].

85. The earbuds include a speaker, such as speaker 22 shown in Figure 3, along with an earbud housing 16 in acoustical communication with the speaker 22 and apertures 34*a*-34*b* through which sound from the speaker 22 can pass. Ex. 1026 at [0006], [0009], [0102], FIG. 3. The earbuds also include a light-guiding cover to deliver light from an optical emitter into the ear canal and to deliver collected light to an optical detector, such as shown by cover 18, optical emitter 24, and optical detector 26 depicted in Figure 3. Ex. 1026 at Abstract, [0006], [0106], FIG. 3. The light directed into the ear from a light emitter and the subsequent collection of light

at a detector may be used for detecting or measuring, for example, body or skin temperature, blood gas levels, heart rate, blood flow, etc. Ex. 1026 at [0010].

3. Tran (Ex. 1027)

86. U.S. Patent No. 8,108,036 ("Tran") describes a patient heart monitoring system that includes wireless nodes forming a wireless mesh network. Ex. 1027, Abstract, 3:3-13, 8:29-33. The system also includes a wearable appliance adapted to communicate with the wireless nodes and a statistical analyzer to determine heart attack or stroke attack. Ex. 1027, Abstract, 3:3-13. The wearable appliance may include sensors and non-invasively measure, for example, blood pressure. Ex. 1027, 4:62-65, 9:23-30.

4. Carlson (Ex. 1028)

87. U.S. Patent Application Publication No. 2005/0049468 A1 ("Carlson") describes an optical pulse oximeter for non-invasive measurement of pulsation and blood oxygen saturation. Ex. 1028 at ¶ [0002]. Carlson describes an ear-clip form factor. Ex. 1028 at ¶¶ [0048]-[0049]. This form factor is illustrated in Figures 1 and 2:

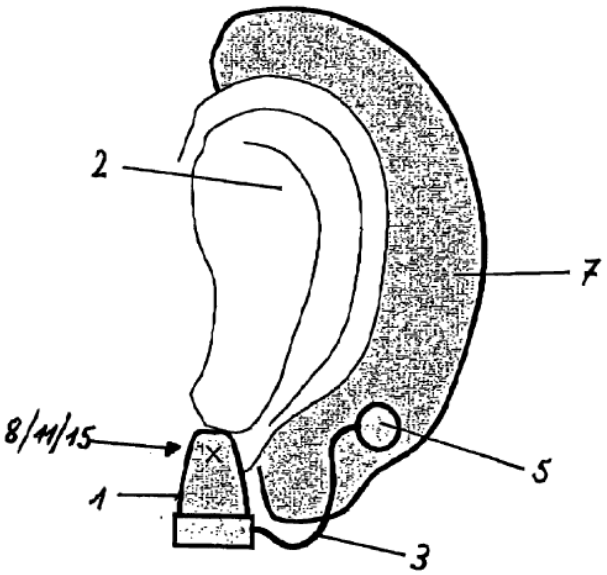

Figure 1

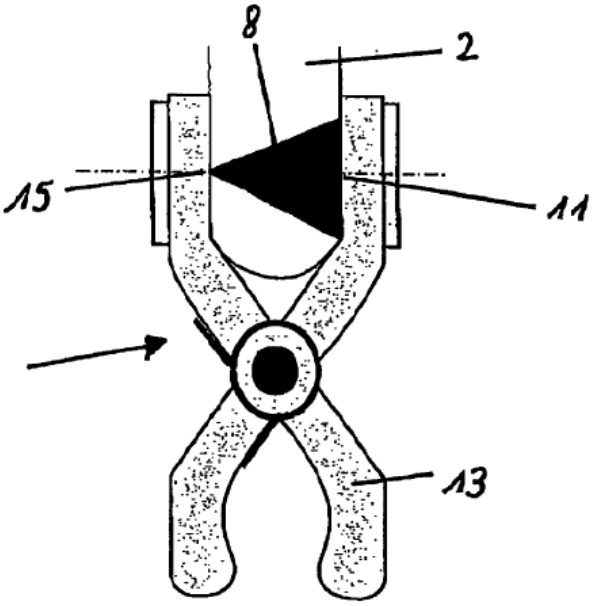

Figure 2

Ex. 1028 at FIGS. 1-2.

88. Carlson describes optical and/or electronic means to improve signal-to-noise and signal-to-background performance by using beam shaping optical elements, such as diffractive or refractive lenses, to direct light into tissue and a photon detecting element. Ex. 1028 at ¶¶ [0010], [0013]-[0014]. Carlson also discloses the use of "optical wavelength filters" for filtering light to a particular range of wavelengths before it reaches a photo detecting element. Ex. 1028, [0026], [0062]. Finally, Carlson describes module packaging arrangements integrating these optical elements. Ex. 1028 at ¶¶ [0041], [0062], FIG. 6*c*.

5. Marbach (Ex. 1029)

89. U.S. Patent No. 7,139,076 ("Marbach") describes an apparatus and methods for improving the stability and reproducibility of optical diffuse reflection measurement. Ex. 1029 at 5:53-6:19. Marbach discloses the use of light sources emitting light directed at a sample, and detectors for detecting light. Ex. 1029 at 5:53-6:19. Marbach discusses multivariate measurements and states that "[a]ccuracy is optimized when so-called multivariate Wiener filtering is used to process the multivariate input data into the single, user-desired output." Ex. 1029 at 12:19-27.

X. OPINIONS ON GROUNDS IN THE PETITION

90. I understand that Petitioners have asserted obviousness in Grounds 1-10, as summarized above in Section IX.A, which collectively challenge claims 1-6, 11-16, 19-22, 26-27 of the '304 Patent, described above in Section VII. Petition at 8.

91. As noted above, I am informed and understand that Patent Owner has disclaimed claims 1, 3, 11, 19, and 20 of the '304 Patent.

92. It is my opinion that none of the remaining challenged claims 2, 4-6, 12-16, 21, 22, 26, and 27 of the '304 Patent is obvious over the asserted prior art in any of Grounds 1-10.

A. Ground 1: Obviousness Based on Lisogurski (Claims 1, 3, 11, 19, 20)

93. I understand that Petitioners and Dr. Anthony argue for Ground 1 that claims 1, 3, 11, 19, and 20 of the ’304 Patent are obvious over Lisogurski alone. Petition at 18-49; Ex. 1003 at ¶¶ 74-259. Because Patent Owner has disclaimed claims 1, 3, 11, 19, and 20 of the ’304 Patent, I have not been asked to render any opinions regarding Ground 1.

B. Ground 2: Obviousness Based on Lisogurski and LeBoeuf (Claims 2, 4-6, 14-16, 21-22, 27)

94. Petitioners and Dr. Anthony argue for Ground 2 that claims 2, 4-6, 14-16, 21-22, and 27 of the ’304 Patent are obvious over Lisogurski and LeBoeuf. Petition at 49-57; Ex. 1003 at ¶¶ 260-317. I disagree for at least the reasons provided below.

1. Claims 2, 14, and 27

95. Claim 1 recites a “measurement system comprising … a measurement device configured to … deliver an analysis output beam to a sample [and] a receiver configured to: receive and process at least a portion of the analysis output beam reflected or transmitted from the sample.” Ex. 1001 at 36:15-29. Dependent claim 2 further recites, “the measurement system further comprises a reflective surface to receive and redirect at least some of the at least a portion of the analysis output beam reflected or transmitted from the sample.” Ex. 1001 at 36:60-67.

96. Claim 11 recites a "measurement system comprising … [a] wearable measurement device configured to … deliver an analysis output beam to a sample … [and] further comprising a receiver configured to: receive and process at least a portion of the analysis output beam reflected or transmitted from the sample." Ex. 1001 at 37:39-56. Dependent claim 14 further recites, "the measurement system further comprising a reflective surface to receive and redirect at least some of the at least a portion of the analysis output beam reflected or transmitted from the sample." Ex. 1001 at 38:39-46.

97. Claim 19 recites a "wearable device comprising: a … measurement device configured to: generate … an input optical beam ..., and receive and to deliver a portion of the input optical beam to tissue, wherein the tissue reflects at least a portion of the input optical beam delivered to the tissue; the measurement device further comprising a receiver configured to: capture light …, the captured light including at least a portion of the input optical beam reflected from the tissue." Ex. 1001 at 38:62-39:17. Dependent claim 27 further recites, "the measurement device further comprises a reflective surface configured to receive and redirect at least a portion of light reflected from the tissue." Ex. 1001 at 40:39-42.

98. As Petitioners and Dr. Anthony recognize, Lisogurski does not disclose the "reflective surface" limitations recited in claims 2, 14, and 27. Petition at 54-57; Ex. 1003 at ¶¶ 272-273, 293, 317. Petitioners and Dr. Anthony rely on LeBoeuf,

asserting that LeBoeuf includes a reflective surface that scatters and focuses light from optical emitters 24 and further arguing that "a POSITA would have been motivated to modify Lisogurski's measurement system with LeBoeuf's reflective surface teachings to advantageously enhance the quality of signal measurements." Petition at 52-53, 55; Ex. 1003 at ¶¶ 265, 274.

99. Petitioners and Dr. Anthony's argument includes the following annotated version of LeBoeuf's Figure 8C in LeBoeuf:

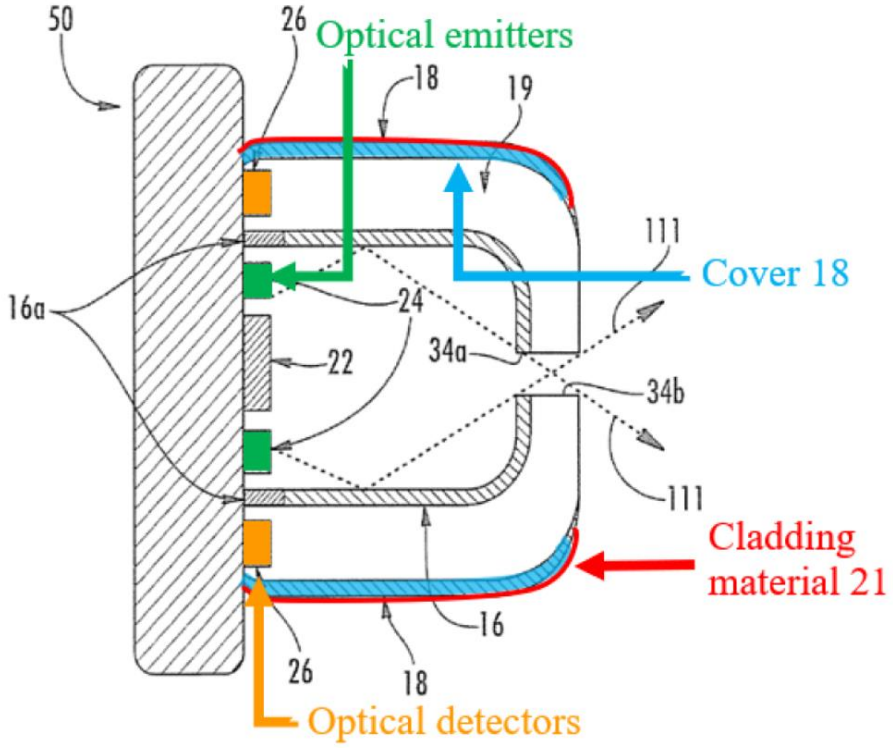

FIG. 8C

Petition at 51; Ex. 1003 at ¶ 260. Lisogurski and LeBoeuf do not render obvious the

"reflective surface" limitations recited in claims 2, 14, and 27, including because (i) Petitioners and Dr. Anthony do not show that a POSITA would have been motivated to implement the reflective surface of LeBoeuf in Lisogurski and (ii) indeed, a POSITA would not have been motivated to implement the reflective surface of LeBoeuf in Lisogurski.

a) Previous IPRs Regarding Related Patents

100. I understand that certain portions of the Petition and Dr. Anthony's declaration rely on findings by the Board in prior IPR proceedings challenging patents related to the '304 Patent, including the '533-FWD and '484-FWD. However, the "reflective surface" limitations recited in claims 2, 14, and 27 of the '304 Patent are not recited in the claims of either the '533 Patent or '484 Patent, and Petitioners and Dr. Anthony do not rely on the '533-FWD or '484-FWD in their analysis of claim 2. *See* Petition at 54-55; Ex. 1003 at ¶¶ 272-273. Therefore, I understand that to the extent that Petitioners and Dr. Anthony rely on the Board's findings in the '533-FWD and '484-FWD, those prior findings do not address the "reflective surface" limitations recited in claims 2, 14, and 27 of the '304 Patent.

b) LeBoeuf's Alleged Disclosure of the Reflective Surface Limitation

101. Assuming that LeBoeuf's disclosure meets the "reflective surface" limitations in claims 2, 14, and 27, as explained below, the combination of

Lisogurski and LeBoeuf does not render obvious the "reflective surface" limitations in claims 2, 14, and 27 at least because Petitioners and Dr. Anthony have not sufficiently explained and supported a motivation to apply the alleged reflective surface teachings of LeBoeuf to Lisogurski and because there was no such motivation.

c) Petitioners and Dr. Anthony Do Not Show that a POSITA Would Have Been Motivated to Implement LeBoeuf's Alleged Reflective Surface Teachings in Lisogurski to Meet the Reflective Surface Limitation

102. For the "reflective surface" limitations in claims 2, 14, and 27, I understand that Petitioners and Dr. Anthony argue that a POSITA would have applied LeBoeuf's alleged reflective surface teachings to Lisogurski's system to meet this limitation. Petition at 54-55 (asserting that "a POSITA would have been motivated to modify Lisogurski's measurement system with LeBoeuf's reflective surface"); Ex. 1003 at ¶¶ 272-274 (same).

103. Petitioners and Dr. Anthony do not show, with sufficient explanation or supporting evidence, that a POSITA would have been motivated to implement LeBoeuf's alleged reflective surface teachings in Lisogurski's sensor.

104. The Petition addresses motivation to combine LeBoeuf's alleged reflective surface teachings with Lisogurski's system in a single paragraph of Petition Section IX.C.2. Petition at 52-53. The Petition's analysis of claim 2

addresses motivation to combine LeBoeuf and Lisogurski in only a single sentence that refers back to that one relevant paragraph in Petition Section IX.C.2. Petition at 55 (stating "*[a]s discussed in §IX.C.2*, a POSITA would have been motivated to modify Lisogurski's measurement system with LeBoeuf's reflective surface teachings" (emphasis added)).

105. Dr. Anthony addresses motivation to combine LeBoeuf's alleged arc arrangement with Lisogurski's system in only one paragraph of Section IX.B.2. Ex. 1003 at ¶ 265. Dr. Anthony's analysis of claim 2 addresses motivation to combine LeBoeuf and Lisogurski by referring back to that relevant paragraph of Section IX.B.2 of his declaration. Ex. 1003 at ¶ 274 (stating "*[a]s discussed in Section IX.B.2*, a person of ordinary skill in the art would have been motivated to modify Lisogurski's measurement system with LeBoeuf's reflective surface teachings" (emphases added)).

106. Based on my review, Petitioners and Dr. Anthony have not provided an explanation, or supporting evidence, of specifically *why* LeBoeuf's teaching of a reflective surface would have been implemented in Lisogurski's sensor by a POSITA.

107. The relevant paragraphs of the Petition and Dr. Anthony's declaration appear to only argue that a POSITA would have been motivated to incorporate into Lisogurski the "reflective surface (e.g., 'a cover 18' with 'cladding material 21

[which] may be reflective material')" from LeBoeuf, not any of the components related to that reflective surface in LeBoeuf such as base 50, speaker 22, earbud housing 16, cover 18, apertures 34*a*-34*b*, or light guiding region 19. Petition at 54-55; Ex. 1003 at ¶¶ 272-273; Ex. 1026 at FIG. 8C. Those relevant paragraphs of the Petition and Dr. Anthony's declaration addressing motivation to combine do not assert clearly and specifically that a POSITA would have incorporated any such related component(s) of LeBoeuf's Figure 8C. Petition at 52-53; Ex. 1003 at ¶ 265. Instead, based on my review, those relevant paragraphs are ambiguous and assert motivation to merely "employ a reflective material in Lisogurski's LEDs" (Petition at 52-53), "apply LeBoeuf's reflective material teaching to Lisogurski's system" (Ex. 1003 at ¶ 265), and "apply LeBoeuf's reflective surface teachings to Lisogurski's wearable device" (Ex. 1003 at ¶ 265). *See also* Petition at 55 ("modify Lisogurski's measurement system with LeBoeuf's reflective surface teachings"); Ex. 1003 at ¶ 274 ("modify Lisogurski's measurement system with LeBoeuf's reflective surface teachings"). In particular, the Petition's paragraph regarding motivation for the reflective surface limitation refers only to LeBoeuf's "reflective material teachings" and does not mention any related components of LeBoeuf's Figure 8C embodiment, such as earbud housing 16. Petition at 52-53. Also, the relevant paragraph of Dr. Anthony's declaration does not mention any related components either. Ex. 1003 at ¶ 265. Therefore, based on my review, Petitioners

and Dr. Anthony only argue that a POSITA would have allegedly been motivated to incorporate LeBoeuf's teaching of a reflective surface or material and not any related components of LeBoeuf's Figure 8C embodiment. Petition at 52-53; Ex. 1003 at ¶ 265.

108. The relevant paragraphs of the Petition and Dr. Anthony's declaration cite and rely on a single paragraph in LeBoeuf, a single paragraph in Exhibit 1041, two paragraphs in Chin, and two paragraphs in Colvin to allege motivation. Petition at 52-53 (citing Ex. 1026 at [0125]; Ex. 1041 at [0152]; Ex. 1062 at 3:28-33, 7:46-57; Ex. 1063 at 8:24-25, 51:28-52:8, Fig. 23D); Ex. 1003 at ¶ 265 (same). None of these cited paragraphs support Petitioners' proposal to incorporate LeBoeuf's reflective surface into Lisogurski's sensor.

109. Petitioners and Dr. Anthony first allege motivation by citing and relying upon an alleged advantage that LeBoeuf discloses. Petition at 52-53 (citing Ex. 1026 at [0125]); Ex. 1003 at ¶ 265. That disclosure in LeBoeuf states that an "advantage of this configuration is" is that it "may reduce unwanted optical signals from regions that may not be relevant to the physiological activity of interest." Ex. 1026 at [0125]. This disclosure states that this is an advantage of "*this configuration*." Ex. 1026 at [0125].

110. A POSITA would have understood that this cited disclosure's reference to "this configuration" does not refer to LeBoeuf's teaching of a reflective surface

in isolation. Ex. 1026 at [0125]. Instead, a POSITA would have understood "this configuration" in the cited disclosure to mean the combination of related components in LeBoeuf's Figure 8C embodiment, including base 50, speaker 22, earbud housing 16, cover 18, the arrangement of optical emitters 24 and detectors 26, and apertures 34*a*-34*b* through which sound from speaker 22 and optical energy 111 from emitters 24 may exit earbud housing 16 and cover 18. Ex. 1026 at FIG. 8C, [0123], [0125]. Such related components constituting LeBoeuf's disclosure of "this configuration" in paragraph [0125] would involve at least the components depicted in green in the following annotated version of LeBoeuf's Figure 8C:

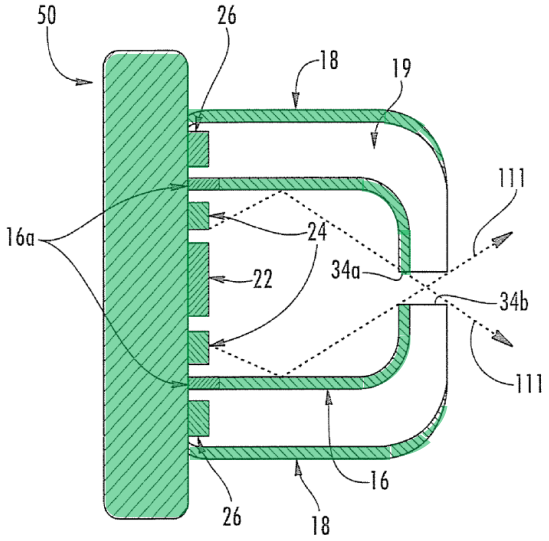

FIG. 8C

Ex. 1026 at FIG. 8C (annotated), [0125].

111. For example, LeBoeuf discloses for its Figure 8C embodiment that earbud housing 16 "may be at least partially reflective to scatter light [from emitters

24] within the cavity defined by the earbud housing 16," such that "optical energy 111 may exit the earbud 30 through apertures 34*a*, 34*b*, in the housing 16 and cover 18," through which "sound from the speaker 22" also passes. Ex. 1026 at [0125], [0123], FIG. 8C; *see also* Ex. 1026 at [0017] (disclosing "a light reflective material on … surfaces of the light-guiding cover). Thus, a POSITA would have understood that the advantage that Petitioners and Dr. Anthony cite in LeBoeuf is necessarily based on the collective "configuration" of components in LeBoeuf's Figure 8C embodiment and is not the result of LeBoeuf's reflective surface alone. Ex. 1026 at [0125], FIG. 8C.

112. As discussed above, the relevant paragraphs of the Petition and Dr. Anthony's declaration argue motivation regarding only LeBoeuf's teaching of a reflective surface, not regarding any related components in LeBoeuf's Figure 8C embodiment. Petition at 52-53 (failing to discuss any components in LeBoeuf except the "reflective [surface or material]" itself); Ex. 1003 at ¶ 265. Thus, Petitioners and Dr. Anthony's motivation argument regarding only LeBoeuf's teaching of a reflective surface is not supported by the cited disclosure in LeBoeuf regarding an advantage of the "configuration" of components in the Figure 8C embodiment. Ex. 1026 at [0125], FIG. 8C.

113. A POSITA would have understood that the advantage described in the cited disclosure of LeBoeuf, which relates to the "configuration," would not have

been achieved by LeBoeuf's teaching of a reflective surface alone, without the related components in the Figure 8C embodiment, as the Petition argues. Petition at 52-53; Ex. 1026 at [0125], FIG. 8C. That is, I disagree with Petitioners' assertion that the advantage of "reduc[ing] unwanted optical signals from regions that may not be relevant to the physiological activity of interest" would have been achieved by only "LeBoeuf's reflective material." Petition at 52-53 (citing Ex. 1026 at [0125]). As explained above, that advantage is an advantage of the collective "configuration" of components in LeBoeuf's Figure 8C embodiment. Ex. 1026 at [0125].

114. Petitioners and Dr. Anthony next allege motivation by citing and relying upon the Exhibit 1041 for its alleged teaching that "a sensor surrounded by a 'reflective' material may 'help[ ] direct light to and/or from the sensor module [ ] and a blood flow region [i.e., measurement site] within the body part'" Petition at 53 n.12 (citing Ex. 1041 at [0152]); Ex. 1003 at ¶ 265 (quoting Ex. 1041 at [0152]). Petitioners and Dr. Anthony's motivation argument regarding incorporating into Lisogurski only LeBoeuf's teaching of a reflective surface, without the related components of LeBoeuf's Figure 8C embodiment, is not supported by the cited disclosure in Exhibit 1041.

115. A POSITA would have understood that the cited disclosure in Exhibit 1041 does not relate to merely incorporating a reflective surface into a sensor as

Petitioners and Dr. Anthony allege a POSITA would have done with LeBoeuf and Lisogurski. Ex. 1041 at [0152]. Instead, the cited disclosure in Exhibit 1041 relates to the specific configurations shown in "FIGS. 24-27," in which a "light guiding region 2306" (which "may be a reflector") "surround[s] or partially surround[s] [a] sensor module 700, 800 and/or isolation region 2304" in such a way that "light guiding region 2305 helps direct light to and/or from the sensor module 700, 800 and a blood flow region," and "[i]n the case of a reflective layer, the sensor module 700, 800 is at least partially exposed." Ex. 1041 at [0152], FIGS. 24-27. A POSITA would have understood that the benefit that Petitioners and Dr. Anthony point to regarding directing light to/from a sensor module and a blood flow region is based on the configuration of the light guiding region 2306 in Figures 24-27 relative to other related components, including sensor module 700, 800, isolation region 2304, and the at least partial exposure. Ex. 1041 at [0152], FIGS. 24-27. Exhibit 1041 does not teach that this benefit of directing light is achieved by simply incorporating a reflective surface into a sensor. Thus, a POSITA would have understood that the cited disclosure in Exhibit 1041 concerns the configuration of a reflective surface and therefore does not support Petitioners and Dr. Anthony's argument that a POSITA would have been motivated to incorporate LeBoeuf's teaching of a reflective surface into Lisogurski without discussing its configuration or also incorporating the other related components in LeBoeuf's Figure 8C embodiment.

116. Petitioners and Dr. Anthony similarly rely on Chin and Colvin in alleging motivation. Petition at 52 (citing Ex. 1062 at 3:28-33, 7:46-57; Ex. 1063 at 8:24-25, 51:28-52:8, Fig. 23D); Ex. 1003 at ¶ 265 (same). A POSITA would have understood that the cited disclosures in Chin and Colvin do not relate to merely incorporating a reflective surface into a sensor as Petitioners and Dr. Anthony allege a POSITA would have done with LeBoeuf and Lisogurski. Ex. 1062 at 3:28-33, 7:46-57; Ex. 1063 at 8:24-25, 51:28-52:8, Fig. 23D. Instead, the cited disclosures in in Chin and Colvin relate to the specific configurations shown in Figure 5F (reflector 154 between emitter 140 and detector 142) and Figure 23(D) (LED chip 18 mounted within reflector cup 18-RC), respectively. Ex. 1062 at 7:46-57, Fig 5F; Ex. 1063 at 8:24-25, 51:28-52:8, Fig. 23D. Thus, Chin and Colvin similarly do not teach that this benefit of directing light is achieved by simply incorporating a reflective surface into a sensor. A POSITA would have understood that the cited disclosures concern the configuration of a reflective surface and therefore does not support Petitioners and Dr. Anthony's argument that a POSITA would have been motivated to incorporate LeBoeuf's teaching of a reflective surface into Lisogurski without discussing its configuration or also incorporating the other related components in LeBoeuf's Figure 8C embodiment.

117. Based on my review, Petitioners and Dr. Anthony have not provided an explanation, or supporting evidence, of specifically *how* LeBoeuf's teaching of a

reflective surface would have been implemented in Lisogurski's sensor by a POSITA.

118. As discussed above, a POSITA would have understood that the reflective surface in LeBoeuf's Figure 8C embodiment is premised on and involves related components in that embodiment, including base 50, speaker 22, earbud housing 16, cover 18, the arrangement of optical emitters 24 and detectors 26, and apertures 34*a*-34*b*. Ex. 1026 at [0123], [0125], FIGS. 8A-8C. For example, LeBoeuf discloses that: earbud housing 16 "may be at least partially reflective to scatter light [from emitters 24] within the cavity defined by the earbud housing 16," such that "optical energy 111 may exit the earbud 30 through apertures 34*a*, 34*b*, in the housing 16 and cover 18"; those apertures 34*a*-34*b* in earbud housing 16 and cover 18 are also for "sound from the speaker 22" to pass through; earbud housing 16 "is in acoustical communication with [that] speaker 22" and "is configured to be positioned within an ear"; cover 18 "surrounds the earbud housing 16" and, together with the earbud housing 16, defines the light guiding region 19; cover 18 "collects light through end portion 18*f* and delivers the collected light to the optical detectors 26"; the optical emitters 24 and detectors 26 are arranged relative to speaker 22, earbud housing 16, and cover 18; and speaker 22, earbud housing 16, cover 18, optical emitters 24, and detectors 26 are all positioned relative to base 50. Ex. 1026 at [0123], [0125], FIGS. 8A-8C.

119. As also discussed above, Petitioners and Dr. Anthony appear to only argue that a POSITA would have been motivated to incorporate into Lisogurski the "reflective [surface or material]" from LeBoeuf's Figure 8C embodiment, not any of the related components in that embodiment such as base 50, speaker 22, earbud housing 16, cover 18, and apertures 34*a*-34*b*. Petition at 52-53; Ex. 1003 at ¶ 265. For example, based on my review, the relevant paragraphs of the Petition and Dr. Anthony's declaration addressing motivation to combine do not assert clearly and specifically that a POSITA would have incorporated any such related component(s) of LeBoeuf's Figure 8C embodiment into Lisogurski. Instead, those paragraphs refer merely to employing "a reflective material" or applying "LeBoeuf's reflective surface." Petition at 52-53, 55; Ex. 1003 at ¶¶ 265, 274. In particular, the Petition's paragraph regarding motivation for the reflective surface limitation refers only to LeBoeuf's "reflective material teachings" and does not mention any related components of LeBoeuf's Figure 8C embodiment. Petition at 52-53. Therefore, based on my review, Petitioners and Dr. Anthony only argue that a POSITA would have allegedly been motivated to incorporate LeBoeuf's teaching of a reflective surface or materials and not any related components of LeBoeuf's Figure 8C embodiment. Petition at 52-53, 55; Ex. 1003 at ¶¶ 265, 274.

120. Thus, because Petitioners and Dr. Anthony only argue that a POSITA would have incorporated LeBoeuf's teaching of a reflective surface and not the

multiple related components in LeBoeuf's Figure 8C embodiment on which LeBoeuf's reflective surface is premised, they do not and cannot explain how a POSITA would have implemented such a reflective surface in Lisogurski's sensor, which does not include such components as in LeBoeuf's Figure 8C embodiment. The relevant portions of the Petition and Dr. Anthony's declaration contain no explanation as to how a POSITA would have implemented or configured a reflective surface in Lisogurski's sensor. Petition at 52-53, 55; Ex. 1003 at ¶¶ 265, 274. Based on my review, the relevant portions of the Petition and Dr. Anthony's declaration regarding motivation to combine for the reflective surface limitation do not contain any citation to Lisogurski or any detailed discussion of Lisogurski beyond merely referring to Lisogurski's "system," "LEDs" or "wearable device." Petition at 52-53, 55; Ex. 1003 at ¶¶ 265, 274.

121. To the extent that Petitioners and Dr. Anthony do argue or suggest incorporating any component(s) related to the reflective surface in LeBoeuf's Figure 8C embodiment into Lisogurski's sensor (they do not, as explained above), they nonetheless have not provided an explanation, or supporting evidence, of specifically *why* and *how* LeBoeuf's teaching of a reflective surface would have been implemented in Lisogurski's sensor by a POSITA.

122. Based on my review of the Petition and Dr. Anthony's declaration, it is unclear which, if any, related components in LeBoeuf's Figure 8C embodiment are

alleged to be incorporated into Lisogurski. For example, Petitioners and Dr. Anthony ambiguously assert that a POSITA would merely "employ a reflective material in Lisogurski's LEDs" (Petition at 52-53), "apply LeBoeuf's reflective material teaching to Lisogurski's system" (Ex. 1003 at ¶ 265), and "apply LeBoeuf's reflective surface teachings to Lisogurski's wearable device" (Ex. 1003 at ¶ 265). *See also* Petition at 55 ("modify Lisogurski's measurement system with LeBoeuf's reflective surface teachings"); Ex. 1003 at ¶ 274 ("modify Lisogurski's measurement system with LeBoeuf's reflective surface teachings"). Because Petitioners and Dr. Anthony do not clearly identify which, if any, related components of LeBoeuf's Figure 8C embodiment would have allegedly been incorporated into Lisogurski, they cannot explain why or how a POSITA would have been motivated to implement the reflective surface and/or such related components in Lisogurski.

123. Based on my review, to the extent that Petitioners and Dr. Anthony argue to incorporate into Lisogurski any component(s) related to the reflective surface in LeBoeuf's Figure 8C embodiment, the only such component(s) potentially addressed in their Petition and declaration are cover 18 with cladding material 21 and earbud housing 16, which are generally discussed in their analysis of claim 2. Petition at 54-55; Ex. 1003 at ¶¶ 272-273.

124. A POSITA would have understood that LeBoeuf's earbud housing 16 is an earbud-specific component, including because earbud housing 16 is part of the

"light-guiding earbud" in Figure 8C, "is configured to be positioned within an ear of a subject," "is in acoustical communication with a speaker 22," and "includes … aperture 34*a* through which sound from the speaker 22 can pass." Ex. 1026 at [0050], [0123], [0125]. A POSITA would have also understood that Lisogurski does not teach that its sensor can be an earbud to be placed within an ear because Lisogurski only teaches a sensor that is placed on an external site of the body and, at most, on an "earlobe" or "around or in front of the ear," but not within the ear. Ex. 1025 at 4:6-20.

125. Further, a POSITA would have understood that LeBoeuf's earbud housing 16 itself is premised on and involves other related components of LeBoeuf's Figure 8C embodiment, including base 50, speaker 22, cover 18, apertures 34*a*-34*b*, and light guiding region 19. Ex. 1026 at [0123], [0125]. And as discussed above, Petitioners and Dr. Anthony do not argue that a POSITA would have incorporated those other related components from LeBoeuf's Figure 8C embodiment into Lisogurski's sensor. Petition at 52-55; Ex. 1003 at ¶¶ 265, 274.

126. Based on my review, Petitioners and Dr. Anthony do not consider or address the fact that earbud housing 16 is an earbud-specific component, that Lisogurski does not teach an earbud, that earbud housing 16 is related to and premised on other components in LeBoeuf's Figure 8C embodiment, or incorporation of those other related components into Lisogurski. Petition at 52-55;

Ex. 1003 at ¶¶ 265, 274. Based on my review, Petitioners and Dr. Anthony do not provide any explanation for why or how a POSITA would have implemented earbud housing 16, which is an earbud-specific component premised on other related components in LeBoeuf, into Lisogurski's sensor, which is not an earbud and does not contain those other related components in LeBoeuf. Petition at 52-55; Ex. 1003 at ¶¶ 265, 274. Also, in my opinion, because earbud housing 16 is an earbud-specific component and is premised on other related components in LeBoeuf, and because Lisogurski does not teach an earbud and does not include those other related components in LeBoeuf that earbud housing 16 is based on, a POSITA would not have been motivated to incorporate earbud housing 16 into Lisogurski and would not have been capable of doing so.

127. Additionally, to the extent that Petitioners and Dr. Anthony do argue or suggest incorporating into Lisogurski's sensor one or more components related to the reflective surface in LeBoeuf's Figure 8C embodiment, such as earbud housing 16 or otherwise, such a modification is unexplained and unsupported because the relevant portion of the Petition does not mention any such component(s) from LeBoeuf's Figure 8C embodiment. Petition at 52-53. In my opinion, because the Petition's paragraph regarding motivation for the "reflective surface" limitations in claims 2, 14, and 27 does not expressly identify or discuss any components of LeBoeuf's Figure 8C embodiment, the Petition thus does not and cannot explain

why or how a POSITA would have been motivated to implement such an unidentified component in Lisogurski's sensor.

d) A POSITA Would Not Have Been Motivated to Implement LeBoeuf's Alleged Reflective Surface Teachings in Lisogurski to Meet the Reflective Surface Limitation

128. As explained above, for the "reflective surface" limitations in claims 2, 14, and 27, I understand that Petitioners and Dr. Anthony argue that a POSITA would have applied LeBoeuf's alleged reflective surface teaching to Lisogurski's system to meet this limitation. Petition at 52-55; Ex. 1003 at ¶¶ 272-273, 265. As also explained above, Petitioners and Dr. Anthony do not show that a POSITA would have been motivated to implement LeBoeuf's alleged reflective surface teaching in Lisogurski like this. Further, a POSITA would not have been motivated to implement LeBoeuf's alleged reflective surface teaching in Lisogurski for at least the following reasons.

129. A POSITA would have understood that LeBoeuf is directed to "earbud" devices that are specifically configured to be placed within a user's ear and to transmit sounds and light into the ear canal. Ex. 1026 at Abstract, [0002], [0009], [0123], FIGS. 1-12B. In particular, the embodiment shown in LeBoeuf's Figure 8C that Petitioners and Dr. Anthony rely upon for the "reflective surface" limitations in claims 2, 14, and 27 is a "light-guiding earbud." Ex. 1026 at [0050], [0125]. The

embodiment in LeBoeuf's Figures 8A-8B, which is substantially similar to the embodiment in Figure 8C (except that in the Figure 8C embodiment, the "earbud housing 16 may be at least partially reflective"), is also a "light-guiding earbud." Ex. 1026 at [0048]-[0049], [0123], [0125].

130. A POSITA would have also understood that for the embodiment shown in LeBoeuf's Figure 8C, the reflective surface is premised on and involves other related components, including base 50, speaker 22, earbud housing 16, cover 18, the arrangement of optical emitters 24 and detectors 26, and apertures 34*a*-34*b*. Ex. 1026 at [0123], [0125], FIGS. 8A-8C. For example, the reflective surface is related at least to the components depicted in green in the following annotated version of LeBoeuf's Figure 8C:

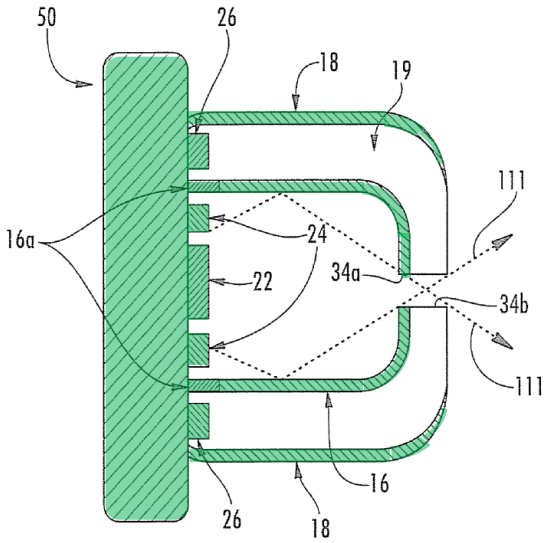

FIG. 8C

Ex. 1026 at FIG. 8C (annotated), [0123], [0125].

131. For example, LeBoeuf discloses that: earbud housing 16 "may be at least partially reflective to scatter light [from emitters 24] within the cavity defined by the earbud housing 16," such that "optical energy 111 may exit the earbud 30 through apertures 34*a*, 34*b*, in the housing 16 and cover 18"; those apertures 34*a*-34*b* in earbud housing 16 and cover 18 are also for "sound from the speaker 22" to pass through; earbud housing 16 "is in acoustical communication with [that] speaker 22" and "is configured to be positioned within an ear"; cover 18 "surrounds the earbud housing 16" and, together with the earbud housing 16, defines the light guiding region 19; cover 18 "collects light through end portion 18*f* and delivers the collected light to the optical detectors 26"; the optical emitters 24 and detectors 26 are arranged relative to speaker 22, earbud housing 16, and cover 18; and speaker 22, earbud housing 16, cover 18, optical emitters 24, and detectors 26 are all positioned relative to base 50. Ex. 1026 at [0123], [0125], FIGS. 8A-8C.

132. A POSITA would have also understood that those other related components in Figure 8C are earbud-specific components and that the configuration of components in LeBoeuf's Figure 8C—including the reflective surface and the other related components on which that reflective surface is premised—is necessarily based on, and specific to, an earbud and the unique physical aspects of using a sound- and light-guiding earbud to deliver sound to and deliver/collect light to/from the ear. *See, e.g.*, Ex. 1026 at [0123]-[0125] ("light guiding earbud 30";

"earbud housing 16 extending outwardly from the base 50 that is configured to be positioned within an ear"; "earbud housing 16 is in acoustical communication with a speaker 22 and includes at least one aperture 34*a* through which sound from the speaker 22 can pass"; "cover 18 includes at least one aperture 34*b* through which sound from the speaker 22 can pass"; "light guiding region 19"; "cover 18 … serves as a light guide that … collects light through end portion 18*f* and delivers the collected light to the optical detectors 26"; "earbud housing 16 may be at least partially reflective to scatter light within the cavity defined by the earbud housing 16" such that "optical energy 111 may exit the earbud 30 through apertures 34*a*, 34*b* in the housing 16 and cover 18"). For example, the reflective surface that Petitioners and Dr. Anthony rely upon in LeBoeuf's Figure 8C embodiment is located within an earbud housing 16, and that earbud housing 16, with the reflective surface, scatters light emitted by optical emitters 24 positioned around speaker 22 and directs both optical energy 11 and sound from speaker 22 through apertures 34*a*-34*b*. Ex. 1026 at FIG. 8C, [0123], [0125].

133. A POSITA would have understood that Lisogurski, in contrast to LeBoeuf, does not teach that its sensor can be an earbud placed within an ear, let alone teach sound- and light-guiding earbud components such as those described above upon which LeBoeuf's reflective surface is premised. For example, Lisogurski does not disclose that its sensor can include a speaker or make sound. At

most, a POSITA would have understood that Lisogurski only discloses that its sensor may be placed on an "earlobe" or "around or in front of the ear"—not *within* the ear like the relied-upon embodiment in Figure 8C of LeBoeuf. Ex. 1025 at 4:6-20; Ex. 1026 at [0123], [0125]. Lisogurski only describes a sensor that is placed on, and takes measurements directly from, an *external site* on a patient. Ex. 1025 at 4:6-20 (describing suitable sensor locations as a fingertip, toe, forehead, earlobe, foot, neck, wrist, thigh, ankle, and around or in front of the ear).

134. Based on my review, Petitioners and Dr. Anthony fail to recognize or address, as explained above, that (i) the reflective surface that they rely upon in LeBoeuf's Figure 8C is premised on other earbud-specific components, (ii) the configuration of components in LeBoeuf's Figure 8C, including the reflective surface and related components, is specific to an earbud, and (iii) Lisogurski does not teach that its sensor can be an earbud. Petition at 52-55; Ex. 1003 at ¶¶ 265, 272-273; Ex. 1025 at 4:6-20; Ex. 1026 at [0123], [0125].

135. Because Lisogurski's sensor does not include the related components upon which LeBoeuf's reflective surface in the Figure 8C embodiment is premised, as explained above, and Petitioners and Dr. Anthony do not argue that Lisogurski would have been modified to include those related components, a POSITA would not have been motivated to implement LeBoeuf's reflective surface in Lisogurski nor capable of doing so. Ex. 1026 at FIG. 8C; [0123], [0125].

136. Also, because Lisogurski does not teach or suggest that its sensor could be an earbud or placed within the ear, a POSITA would not have modified Lisogurski's sensor based on LeBoeuf's Figure 8C embodiment, which teaches an earbud-specific configuration that includes a reflective surface in configuration with related earbud-specific components, as explained above. Ex. 1026 at FIG. 8C, [0123], [0125].

137. For at least these reasons, I disagree with Petitioners' and Dr. Anthony's conclusions for Ground 2 and claims 2, 14, and 27 of the '304 Patent.

2. Claims 4-6, 15-16, and 21-22

138. Claim 1 recites a "measurement system comprising: a light source comprising a plurality of semiconductor sources … [and] a receiver" Ex. 1001 at 36:15-26. Dependent claim 4 further recites, "the receiver comprises a plurality of detectors arranged along a first arc, and wherein the plurality of semiconductor sources are arranged along a second arc." Ex. 1001 at 37:6-9. Claims 5 and 6 depend on claim 4. Ex. 1001 at 37:10-13.

139. Claim 11 recites a "measurement system comprising: a wearable measurement device …, including a light source comprising a plurality of semiconductor sources …; the wearable measurement device further comprising a receiver." Ex. 1001 at 37:39-53. Dependent claim 15 further recites, "the receiver comprises a plurality of detectors arranged along a first arc, and wherein the plurality

of semiconductor sources are arranged along a second arc that is offset from the first arc." Ex. 1001 at 38:47-51. Claim 16 depends on claim 15. Ex. 1001 at 38:52-53.

140. Claim 19 recites a "wearable device comprising: a measurement device including a light source comprising a plurality of semiconductor sources …; the measurement device further comprising a receiver." Ex. 1001 at 38:62-39:17. Dependent claim 21 further recites, "the receiver comprises a plurality of detectors arranged along a first arc, and wherein the plurality of semiconductor sources are arranged along a second arc that is offset from the first arc." Ex. 1001 at 40:3-6. Claim 22 depends on claim 21. Ex. 1001 at 40:7-8.

141. As Petitioners and Dr. Anthony recognize, Lisogurski does not disclose any arrangement of its LEDs or detectors, such as arranging its LEDs and detectors in "arcs" as recited in claims 4-6, 15-16, and 21-22. Petition at 55-57; Ex. 1003 at ¶¶ 278-280.

142. Petitioners and Dr. Anthony instead rely on LeBoeuf, arguing that LeBoeuf's Figure 8B allegedly shows optical emitters 24 and optical detectors 26 arranged in two respective arcs (which I refer to herein as the "alleged arc arrangement" in LeBoeuf) and further arguing that "a POSITA would have been motivated to implement Lisogurski's detector 140/318 … with LeBeouf's arc arrangement." Petition at 51-52, 55-57; Ex. 1003 at ¶¶ 261-264, 278-280.

143. Petitioners and Dr. Anthony's argument includes the following annotated version of LeBoeuf's Figure 8B purporting to show this alleged arc arrangement in LeBoeuf:

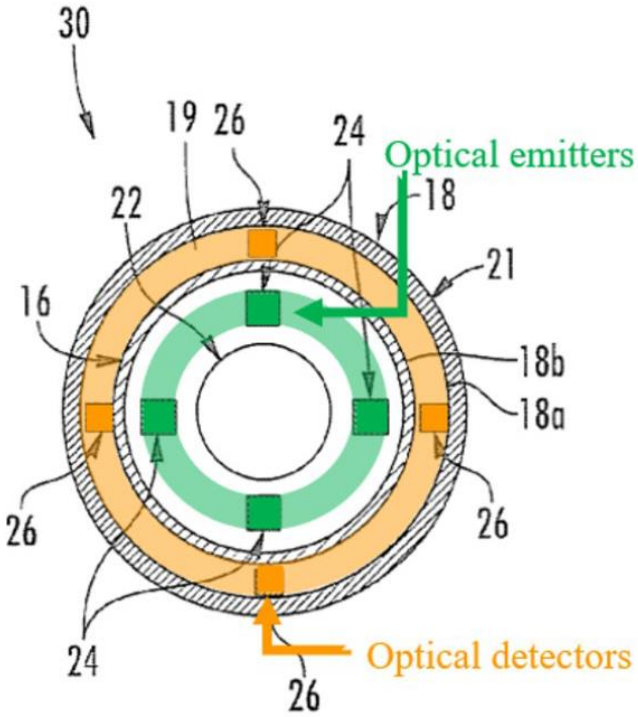

FIG. 8B

Petition at 56; Ex. 1003 at ¶ 278-279. I note that this embodiment depicted in LeBoeuf's Figure 8B is also the same embodiment depicted in LeBoeuf's Figure 8A. Ex. 1026 at FIGS. 8A-8B, [0048]-[0049], [0123].

144. Lisogurski and LeBoeuf do not render obvious the arc limitation of claims 4-6, 15-16, and 21-22, including because (i) Petitioners and Dr. Anthony do not show that a POSITA would have been motivated to implement LeBoeuf's

alleged arc arrangement in Lisogurski and (ii) a POSITA would not have been motivated to implement LeBoeuf's alleged arc arrangement in Lisogurski.

a) Previous IPRs Regarding Related Patents

145. I understand that certain portions of the Petition and Dr. Anthony's declaration rely on findings by the Board in prior IPR proceedings challenging patents related to the '304 Patent, including the '533-FWD and '484-FWD. However, the arc limitations recited in claims 4-6, 15-16, and 21-22 of the '304 Patent are not recited in the claims of either the '533 Patent or '484 Patent, and Petitioners and Dr. Anthony do not rely on the '533-FWD or '484-FWD in their analysis of claim 4. *See* Petition at 55-56; Ex. 1003 at ¶¶ 278-280. Therefore, I understand that to the extent that Petitioners and Dr. Anthony rely on the Board's findings in the '533-FWD and '484-FWD, those prior findings do not address the arc limitation in claims 4-6, 15-16, and 21-22 of the '304 Patent.

b) LeBoeuf's Alleged Disclosure of the Arc Limitation

146. Assuming that LeBoeuf's alleged arc arrangement meets the arc limitations recited in claims 4-6, 15-16, and 21-22, as explained below, the combination of Lisogurski and LeBoeuf does not render obvious this arc limitation at least because a POSITA would not have been motivated to apply LeBoeuf's alleged arc arrangement in Lisogurski.

c) Petitioners and Dr. Anthony Do Not Show that a POSITA Would Have Been Motivated to Implement LeBoeuf's Alleged Arc Arrangement in Lisogurski to Meet the Arc Limitation

147. For the arc limitations recited in claims 4-6, 15-16, and 21-22, Petitioners and Dr. Anthony argue that a POSITA would have applied the alleged arc arrangement of optical emitters 24 and optical detectors 26 in LeBoeuf's Figure 8B to arrange the LEDs and detectors in Lisogurski's sensor to meet this limitation. Petition at 55-57; Ex. 1003 at ¶¶ 278-280, 284, 288, 297, 303, 308, 312.

148. Petitioners and Dr. Anthony do not show, with sufficient explanation or supporting evidence, that a POSITA would have been motivated to implement LeBoeuf's alleged arc arrangement of optical emitters 24 and optical detectors 26 to arrange Lisogurski's sensor's LEDs and detectors.

149. I understand that the Petition addresses motivation to combine LeBoeuf's alleged arc arrangement with Lisogurski's system in a single paragraph of Petition Section IX.C.2. Petition at 51-52. The Petition's analysis of claim 4 addresses motivation to combine LeBoeuf and Lisogurski in only a single sentence that refers back to that one relevant paragraph in Petition Section IX.C.2. Petition at 56 (stating "*[a]s discussed (§IX.C.2)*, a POSITA would have been motivated to implement Lisogurski's detector 140/318 (as modified, *see supra* §IX.B.2) with LeBeouf's arc arrangement" (emphasis added)).

150. I understand that Dr. Anthony addresses motivation to combine LeBoeuf's alleged arc arrangement with Lisogurski's system in only two paragraphs of Section IX.B.2. Ex. 1003 at ¶¶ 262-263. Dr. Anthony's analysis of claim 4 addresses motivation to combine LeBoeuf and Lisogurski by referring back to those two relevant paragraphs of Section IX.B.2 of his declaration. Ex. 1003 at ¶ 280 (stating "*[a]s described in Section IX.B.2*, a person of ordinary skill in the art would have been motivated to implement the arc arrangement teachings of LeBeouf to Lisogurski's detector 140/318" (emphasis added)).

151. Based on my review, Petitioners and Dr. Anthony have not provided an explanation as to why LeBoeuf's alleged arc arrangement of optical emitters 24 and optical detectors 26 in Figure 8B would have been implemented in Lisogurski's sensor by a POSITA. Petition at 51-52; Ex. 1003 at ¶¶ 262-263.

152. Based on my review, the relevant portions of the Petition and Dr. Anthony's declaration assert a generic motivation for implementing LeBoeuf's alleged arc arrangement of emitters and detectors in Lisogurski: "to increase detection of scattered light, thus improving accuracy of physiological measurements." Petition at 51-52; Ex. 1003 at ¶¶ 262.

153. Petitioners and Dr. Anthony do not cite any disclosure in either Lisogurski or LeBoeuf to support this assertion that LeBoeuf's alleged arc arrangement achieves increased accuracy. Petition at 51-52; Ex. 1003 at ¶¶ 262-263.

Petitioners and Dr. Anthony do not cite any support in Lisogurski because, as they recognize, Lisogurski does not teach the alleged arc arrangement. Petition at 55-57; Ex. 1003 at ¶¶ 278-280.

154. As for LeBoeuf, the relevant paragraph of the Petition cites to LeBoeuf once, but this citation does not address LeBoeuf's alleged arc arrangement and therefore does not and cannot support the alleged motivation of accuracy: Petitioners cite to paragraph [0105] and Figure 8B to assert that "a POSITA would have been motivated to apply LeBoeuf's teachings of optical emitters and detectors arranged along arcs to improve the detection of scattered light from biological tissue and increase the signal-to-noise ratio of Lisogurski's wearable device," but LeBoeuf contains no such teachings, including at paragraph [0105], which does not address the alleged arc arrangement in Figure 8B. Petition at 52 (citing Ex. 1026 at [0105], FIG. 8B). Also, the corresponding paragraph of Dr. Anthony's declaration only cite to paragraph [0105] for the assertion that "portions of the light emitted into tissue are reflected back out of the tissue over a broad range of angles and locations," but neither this quoted assertion nor paragraph [0105] addresses the alleged arc arrangement of emitters and detectors in Figure 8B or supports the alleged motivation of accuracy. Ex. 1003 at ¶ 263 (citing Ex. 1026 at [0105]). Also, this quoted assertion and citation of paragraph [0105] in the relevant portion of Dr. Anthony's declaration is about the arrangement of only LeBoeuf's detectors, not

LeBoeuf's emitters. Ex. 1003 at ¶ 263 (citing Ex. 1026 at [0105]). Moreover, a POSITA would have understood that the cited paragraph [0105] of LeBoeuf teaches that the detection of scattered light by optical detector 26 is enabled by light guide 18 and light-guiding region 19, which are components not addressed by Petitioners and Dr. Anthony and not included in the alleged arc arrangement. Ex. 1026 at [0105] (disclosing that "the light-guiding region 19 of the light guide 18 guides the [scattered] light to the optical detector 26 through the light-guiding region 19").

155. Neither Lisogurski nor LeBoeuf supports this alleged motivation of accuracy because (i) Lisogurski, as Petitioners and Dr. Anthony recognize, does not teach the alleged arc arrangement to begin with and (ii) LeBoeuf only discloses the alleged arc arrangement via the illustration in Figure 8B and does not contain any discussion of the alleged arc arrangement in Figure 8B, including no disclosure that the arrangement of optical emitters 24 and optical detectors 26 shown in Figure 8B increases accuracy as alleged. *See* Ex. 1026 at [0123]-[0124]. LeBoeuf does not indicate if or how the alleged arc arrangement in Figure 8B increases the accuracy of physiological measurements.

156. The only evidence other than LeBoeuf and Lisogurski cited in the relevant paragraphs of the Petition and Dr. Anthony's declaration is Mendelson. Petition at 52 (citing Ex. 1045 at 4:14-65); Ex. 1003 at ¶¶ 263 (same). But the cited portion of Mendelson does not include or address the alleged arc arrangement of

LeBoeuf's Figure 8B. Also, Mendelson does not support that LeBoeuf's alleged arc arrangement of emitters and detectors achieves increased accuracy, including because, as I explain further below, Mendelson is only cited as alleged motivation related to LeBoeuf's arrangement of *detectors*, not emitters, and the cited portion of Mendelson does not support the assertion for which it is cited.

157. Dr. Anthony also asserts that Lisogurski and LeBoeuf "[b]oth … disclose physiological monitoring devices that can be worn on different parts of the body, including the ear, and which operate by emitting light into biological tissue." Ex. 1003 at ¶¶ 262. This assertion is not made in the relevant paragraphs of the Petition. Petition at 51-53. I disagree with this assertion for the reasons discussed below. Regardless, this assertion does not support the alleged motivation of accuracy and also does not present any other alleged reason why a POSITA would have been motivated to implement LeBoeuf's alleged arc arrangement in Lisogurski.

158. Petitioners and Dr. Anthony also refer to Lisogurski's disclosure "that '[a]ny suitable configuration of light source 316 and detector 318 may be used,' and that 'sensor unit 312 may include multiple light sources and detectors, which may be spaced apart.'" Petition at 53 (quoting Ex. 1025 at 17:42-45); Ex. 1003 at ¶ 262 (same). In my opinion, this disclosure in Lisogurski would not have motivated a POSITA to apply LeBeouf's alleged arc arrangement to Lisogurski, including because this disclosure in Lisogurski does not support that LeBoeuf's alleged arc

arrangement would increase accuracy as Petitioners and Dr. Anthony assert. As discussed herein, Petitioners and Dr. Anthony have not explained why a POSITA would have understood the alleged arc arrangement of emitters and detectors in LeBoeuf's Figure 8B to have been a suitable and beneficial configuration in Lisogurski.

159. For example, LeBoeuf teaches several other arrangements involving multiple emitters and/or detectors (e.g., Ex. 1026 at FIGS. 6, 7A, 11A, 12A-B, 22B, 23), and Petitioners and Dr. Anthony fail to explain why a POSITA would have been motivated to use the alleged arc arrangement in Figure 8B in particular rather than any of the other possible disclosed arrangements in LeBoeuf. Petition at 51-52; Ex. 1003 at ¶¶ 262-263. Even for the embodiment shown in LeBoeuf's Figure 8B, LeBoeuf discloses that "[v]arious configurations and arrangements of optical emitters and detectors may be utilized in accordance with embodiments of the present invention," which shows that LeBoeuf teaches, and a POSITA would have understood, that the alleged arc arrangement shown in Figure 8B is only a possible arrangement and not important. Ex. 1026 at [0123].

160. As another example, a POSITA would have understood that the alleged arc arrangement of emitters and detectors in LeBoeuf's Figure 8B is premised on and involves related components, including base 50, earbud housing 16, cover 18, speaker 22, and light guiding region 19. Ex. 1026 at FIGS. 8A-8B, [0123].

Petitioners and Dr. Anthony do not address those other related components, much less explain why a POSITA allegedly would have been motivated to implement LeBoeuf's alleged arc arrangement of emitters and detectors in Lisogurski without those related components. *See* Petition at 51-52; Ex. 1003 at ¶¶ 262-263. Without those related components in LeBoeuf, a POSITA would not have understood LeBoeuf's alleged arc arrangement of emitters and detectors to have been a suitable and beneficial arrangement for Lisogurski's LEDs and detectors as Petitioners and Dr. Anthony allege. Ex. 1026 at FIGS. 8A-8B, [0123].

161. Petitioners and Dr. Anthony also assert an alleged motivation based on the detection of angularly scattered light. In the Petition, the relevant paragraph argues that "a POSITA would have been motivated to apply LeBoeuf's teachings of optical emitters and detectors arranged along arcs to improve the detection of scattered light from biological tissue," relying on the following assertions:

> *(A)* "A POSITA would have understood that light emitted into biological tissue undergoes significant scattering and absorption, and the reflected light exits the tissue at a wide range of angles" (citing Ex. 1025 at 11:16-20);
>
> *(B)* "A POSITA would have recognized that a linear or closely grouped detector arrangement would fail to capture much of the angularly scattered light." (citing Ex. 1045 at 4:14-65).

Petition at 51-52 (citing also Ex. 1026 at [0105]). The relevant part of Dr. Anthony's declaration also makes these assertions and citations. Ex. 1003 at ¶ 263 (citing Ex.

1025 at 11:16-20; Ex. 1026 at [0105]; Ex. 1045 at 4:14-65).

162. This alleged motivation regarding detection of "angularly scattered" light, however, relates only to LeBoeuf's arrangement of *detectors*, not *emitters*. Petition at 51-52; Ex. 1003 at ¶ 263. For example, Petitioners' assertion *(B)* above refers specifically to a "*detector* arrangement." Petition at 52 (emphasis added); *see* Ex. 1003 at ¶ 263 ("arrangement of *detectors*" (emphasis added)). Thus, even assuming that Petitioners and Dr. Anthony are correct that this alleged motivation of detecting angularly scattered light would have led a POSITA to modify Lisogurski based on LeBoeuf, then Lisogurski's LEDs would not have been affected by this modification and therefore still would not have been "arranged along a second arc" as recited in claims 4-6, 15-16, and 21-22.

163. Because this alleged motivation regarding detection of angularly scattered light relates only to detectors, the only potential motivation that Petitioners and Dr. Anthony's therefore argue for modifying Lisogurski's LEDs based on LeBoeuf's arrangement of emitters is the generic alleged motivation of "accuracy," which I discuss above. Petition at 51-52; Ex. 1003 at ¶¶ 262-263. And to the extent that the assertions *(A)* and *(B)* regarding detection of angularly scattered light are intended to support that alleged motivation of accuracy, these assertions *(A)* and *(B)* only support that alleged motivation of accuracy with respect to modifying Lisogurski based on LeBoeuf's arrangement of detectors, not emitters.

164. Additionally, in my opinion, the alleged motivation regarding detection of angularly scattered light based on assertions *(A)* and *(B)* is flawed at least for the following reasons. First, assertion *(A)* about "angle[d]" light is not supported by the cited portion of Lisogurski (11:6-20), which relates to "light intensity" based on "absorbance and/or reflectance" of a "certain wavelength" but does not address angularly scattered light. Petition at 51-52 (citing Ex. 1025 at 11:6-20); Ex. 1003 at ¶ 263 (citing Ex. 1025 at 11:16-20). Based on my review, Lisogurski never mentions an "angle." Second, assertion *(B)* regarding the deficiency of a "linear … detector arrangement" falsely assumes that only two alternative arrangements existed: a "linear … arrangement" and the alleged arc arrangement in LeBoeuf's Figure 8B. Petition at 52; Ex. 1003 at ¶ 263. Assertion *(B)* thus fails to consider that other potential arrangements existed (e.g., triangle, square, or grid patterns) and that a POSITA could have sought to capture angularly scattered light by using one of those other arrangements, not just the alleged arc arrangement in LeBoeuf's Figure 8B. For example, LeBoeuf itself teaches different arrangements, such as the sensor embodiment in Figure 12A that includes an arrangement of multiple detectors 26 that is neither linear nor like the alleged arc arrangement in Figure 8B, and Petitioners and Dr. Anthony do not explain if or why the alleged arc arrangement of detectors in Figure 8B is better at detecting reflected light than the arrangement in Figure 12A. *E.g.*, Ex. 1026 at FIG. 12A, [0060], [0138].

165. Also, Petitioners' and Dr. Anthony's reliance on Mendelson for assertion *(B)* is flawed at least for the following reasons. Petition at 52 (citing Ex. 1045 at 4:14-65); Ex. 1003 at ¶ 263 (same). First, there is no connection between the particular alleged arc arrangement relied upon in LeBoeuf's Figure 8B and the arrangements referenced in the cited portion of Mendelson, which are different from LeBoeuf's Figure 8B. *E.g.*, Ex. 1045 at 4:14-65 (referencing a sensor with "eight … LEDs and a single photodiode" and another sensor in a "Konig" publication (Ex. 2035)); Ex. 2035 at 5-6 ("Konig" publication disclosing a sensor with two centralized LEDs surrounded by six detectors).

166. Second, Petitioners cite Mendelson for the assertion that "a linear or closely grouped detector arrangement would fail to capture much of the angularly scattered light," but the cited portion of Mendelson does not support this assertion. Petition at 52 (citing Ex. 1045 at 4:14-65). The cited portion of Mendelson does not discuss angles, and it describes at least one sensor with only a "single" detector. Ex. 1045 at 4:14-65 ("Yet another prototype reflectance sensor is based on eight … LEDs and a single photodiode"). Third, Dr. Anthony's declaration shows that he and Petitioners rely specifically on the following purported disclosure in Mendelson, and Dr. Anthony relies on the two underlined quotes for this purported disclosure:

> Accordingly, a person of ordinary skill in the art would have also recognized that a linear or closely grouped arrangement of detectors would be insufficient to capture much of the angularly scattered light,

> as illustrated by e.g., U.S. Patent No. 6,801,799, which I understand has been designated as Exhibit 1045, as further discussed below. Ex. 1045 (Mendelson), 4:14-65 ("in order to maximize the fraction of backscattered light collected by [a] sensor," its system includes "six photodetectors mounted in the center of the sensor around the LEDs.").

Ex. 1003 at ¶ 263 (underlining added).

167. However, Mendelson does not contain this purported disclosure. In the block quote above, the underlined quotes (Ex. 1045 at 4:23-24, 4:45-46) refer to publications in the Background section of Mendelson, not to "its system" as Dr. Anthony alleges. The two underlined quotes are actually separate and unrelated. The following excerpt from Mendelson shows that these two underlined quotes that Dr. Anthony relies upon refer to two separate, unrelated publications described in the cited Background section of Mendelson:

> Another approach is based on … the following publications:
>
> 4. Mendelson, et al., "Design and evaluation of a new reflectance pulse oximeter sensor", Medical Instrumentation, vol. 22, no. 4, pp. 167-173 (1988); and
>
> 5. Mendelson, et al., "Skin reflectance pulse oximetry: in vivo measurements from the forearm and calf", Journal of Clinical Monitoring, vol. 7, pp. 7-12, (1991).
>
> According to this approach, in order to maximize the fraction of backscattered light collected by the sensor, the currents from all six photodiodes are summed electronically by internal circuitry in the pulse oximeter. This configuration essentially creates a large area photodetector made of six discrete photodiodes connected in parallel to produce a single current that is proportional to the amount of light backscattered from the skin. Several studies showed that this sensor configuration could be used successfully to accurately measure

> SaO_2 from the forehead, forearm and the calf on humans. However, this sensor requires a means for heating the skin in order to increase local blood flow, which has practical limitations since it could cause skin burns.
>
> Yet another prototype reflectance sensor is based on eight dual-wavelength LEDs and a single photodiode, and is disclosed in the following publication: Takatani et al., "Experimental and clinical evaluation of a noninvasive reflectance pulse oximeter sensor", Journal of Clinical Monitoring, vol. 8, pp. 257-266 (1992). …
>
> A similar sensor configuration based on <u>six photodetectors mounted in the center of the sensor around the LEDs</u> is disclosed in the following publication: Konig, et al., "Reflectance pulse oximetry—principles and obstetric application in the Zurich system", Journal of Clinical Monitoring, vol. 14, pp. 403-412 (1998).

Ex. 1045 at 4:14-50 (underlining added). Thus, the actual teaching of the first underlined quote says: "in order to maximize the … light collected … *the currents from all ... photodiodes are summed electronically*," which is unrelated to arrangement and instead related to an increased area of the detector. Ex. 1045 at 4:23-26 (emphasis added).

168. Based on my review, Petitioners and Dr. Anthony have not provided an explanation, or supporting evidence, of specifically how LeBoeuf's alleged arc arrangement of optical emitters 24 and optical detectors 26 in Figure 8B would have been implemented in Lisogurski's sensor by a POSITA.

169. A POSITA would have understood that the alleged arc arrangement of emitters and detectors in LeBoeuf's Figure 8B is based on and involves related components, including base 50, earbud housing 16, cover 18, speaker 22, and light

guiding region 19. Ex. 1026 at FIGS. 8A-8B, [0123]. The relevant paragraphs of the Petition and Dr. Anthony's declaration do not consider or address those related components, much less explain how the alleged arc arrangement of emitters and detectors in LeBoeuf, which is based on those related components, would be implemented in Lisogurski's sensor that does not have those related components. Petition at 51-52; Ex. 1003 at ¶¶ 262-263. Petitioners and Dr. Anthony only argue that a POSITA would have been motivated to apply LeBoeuf's alleged arc arrangement of emitters and detectors to Lisogurski's sensor, not that a POSITA would have incorporated those other related components from LeBoeuf into Lisogurski. Petition at 51-52; Ex. 1003 at ¶¶ 262-263. Without incorporating those related components from LeBoeuf into Lisogurski, Petitioners and Dr. Anthony do not explain how a POSITA would have understood to apply LeBoeuf's alleged arc arrangement of emitters and detectors to Lisogurski's sensor. Ex. 1026 at FIGS. 8A-8B, [0123].

170. Also, Petitioners and Dr. Anthony assert an alleged motivation of increased accuracy. Petition at 51-52; Ex. 1003 at ¶¶ 262. They do not explain if or how LeBoeuf's alleged arc arrangement of emitters and detectors would allegedly achieve such accuracy without the other related components in LeBoeuf. Petition at 51-52; Ex. 1003 at ¶¶ 262-263. Without those other related components in LeBoeuf upon which the alleged arc arrangement of emitters and detectors is based, a

POSITA would not have understood the alleged arc arrangement of emitters and detectors to achieve accuracy as alleged. Ex. 1026 at FIGS. 8A-8B, [0123].

d) A POSITA Would Not Have Been Motivated to Implement LeBoeuf's Alleged Arc Arrangement in Lisogurski to Meet the Arc Limitation

171. As explained above, for the arc limitations in claims 4-6, 15-16, and 21-22, Petitioners and Dr. Anthony argue that a POSITA would have applied LeBoeuf's alleged arc arrangement of optical emitters 24 and optical detectors 26 shown by Figure 8B to arrange Lisogurski's LEDs and detectors to meet this limitation. Petition at 51-52, 55-57; Ex. 1003 at ¶¶ 262-263, 278-280. As also explained above, Petitioners and Dr. Anthony do not show that a POSITA would have been motivated to implement LeBoeuf's alleged arc arrangement in Lisogurski like this. Further, a POSITA would not have been motivated to implement LeBoeuf's alleged arc arrangement in Lisogurski for at least the following reasons.

172. A POSITA would have understood that LeBoeuf is directed extensively to "earbud" devices that are specifically configured to be placed within a user's ear and to transmit light and sound into the ear canal. Ex. 1026 at Abstract, [0002], [0009], [0123], FIGS. 1-12B. In particular, the embodiment shown in LeBoeuf's Figures 8A-8B that Petitioners and Dr. Anthony rely upon for the arc limitations in claims 4-6, 15-16, and 21-22 is a "light-guiding earbud." Ex. 1026 at [0048]-[0049], [0123].

173. A POSITA would have also understood that for the embodiment shown in LeBoeuf's Figures 8A-8B (annotated versions below), the alleged arc arrangement of optical emitters 24 (purple) and detectors 26 (orange) that Petitioners and Dr. Anthony rely upon is premised on other related components, including base 50, earbud housing 16 (including bottom portion 16*a*), cover 18 (including the various portions thereof), and speaker 22 (all green) as well as light guiding region 19:

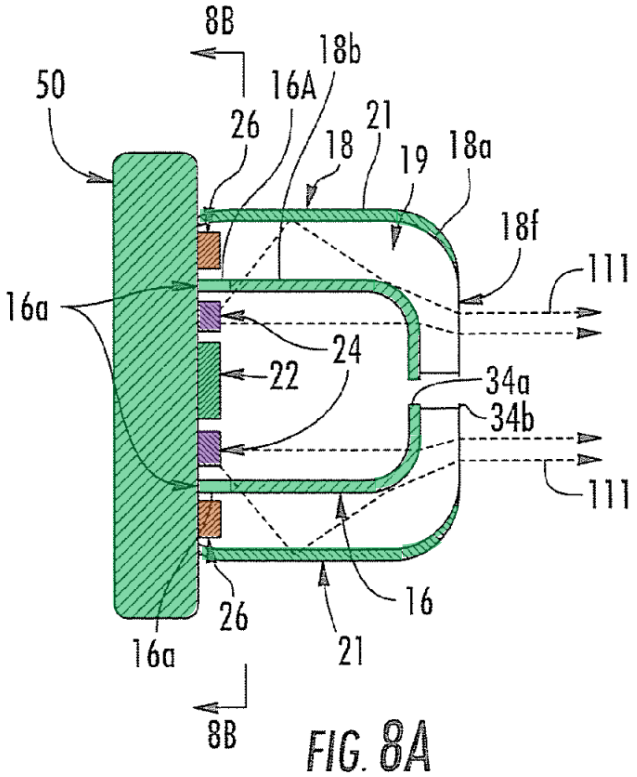

FIG. 8A

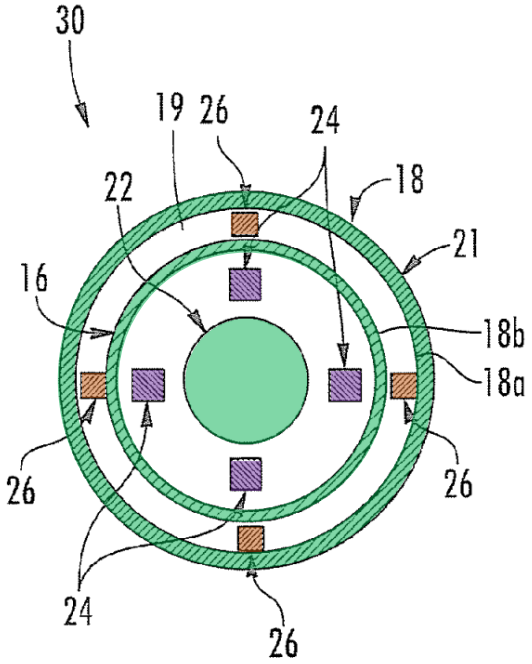

FIG. 8B

Ex. 1026 at FIGS. 8A-8B (annotated), [0123]-[0124]. For example, in the embodiment of Figures 8A-8B, optical emitters 24 are positioned on base 50 around a centrally located speaker 22 and within earbud housing 16, and optical detectors

26 are positioned on base 50 outside of earbud housing 16 but inside cover 18, with emitters 24 and detectors 26 separated by light blocking region 16*a*, with emitters 24 and detectors 26 generally directed to cover end portion 18*f*, and with a light guiding region 19 defined by cover outer surface 18*a* with cladding material 21 and housing 16 in contact with cover inner surface 18*b* and serving as a cladding layer. Ex. 1026 at FIGS. 8A-8B, [0123]-[0124].

174. A POSITA would have also understood that those other related components in Figures 8A-8B are earbud-specific components and that the configuration of components in LeBoeuf's Figures 8A-8B—including the alleged arc arrangement of emitters and detectors and the other related components on which that alleged arc arrangement is premised—is necessarily based on, and specific to, an earbud and the unique physical aspects of using a sound- and light-guiding earbud to deliver sound to and deliver/collect light to/from the ear canal. *See, e.g.*, Ex. 1026 at [0123] ("light guiding earbud 30"; "earbud housing 16 extending outwardly from the base 50 that is configured to be positioned within an ear"; "earbud housing 16 is in acoustical communication with a speaker 22 and includes at least one aperture 34*a* through which sound from the speaker 22 can pass"; "cover 18 includes at least one aperture 34*b* through which sound from the speaker 22 can pass"; "light guiding region 19"; "cover 18 … serves as a light guide that delivers light from the optical emitters 24 into an ear canal … through cover end portion 18*f*" and "also collects

light through end portion 18*f* and delivers the collected light to the optical detectors 26"). For example, the alleged arc arrangement that Petitioners and Dr. Anthony rely upon in LeBoeuf's Figure 8B is the positioning of optical emitters 24 and detectors 26 relative to earbud-specific components, such as the positioning of emitters 24 and detectors 26 around "speaker 22" and around the circular bottom portions of "earbud housing 16" and "cover 18 that surrounds the earbud housing 16" and that "serves as a light guide that delivers light from the optical emitters 24 into an ear canal." Ex. 1026 at [0123], FIGS. 8A-8B.

175. A POSITA would have understood that Lisogurski, in contrast to LeBoeuf, does not teach that its sensor can be an earbud placed within an ear, let alone teach sound- and light-guiding earbud components such as those described above upon which LeBoeuf's alleged arc arrangement is premised. For example, Lisogurski does not disclose that its sensor can include a speaker or make sound. At most, a POSITA would have understood that Lisogurski only discloses that its sensor may be placed on an "earlobe" or "around or in front of the ear"—not *within* the ear like the relied-upon embodiment in Figure 8B of LeBoeuf. Ex. 1025 at 4:6-20; Ex. 1026 at [0123]. Lisogurski also does not teach that its sensor takes measurements from the ear canal like the relied-upon embodiment in LeBoeuf. Ex. 1026 at [0123]. A POSITA would have understood that Lisogurski only teaches a sensor that is placed on, and takes measurements directly from, an *external site* on a patient. Ex.

1025 at 4:6-20 (describing suitable sensor locations as a fingertip, toe, forehead, earlobe, foot, neck, wrist, thigh, ankle, and around or in front of the ear).

176. Dr. Anthony also asserts that Lisogurski and LeBoeuf "[b]oth … disclose physiological monitoring devices that can be worn on different parts of the body, including the ear, and which operate by emitting light into biological tissue." Ex. 1003 at ¶ 262. This assertion is not made in the relevant paragraphs of the Petition. Petition at 51-53. Also, this assertion fails to recognize, as explained above, that (i) the alleged arc arrangement of emitters and detectors that Petitioners rely upon in LeBoeuf's Figure 8B is premised on other earbud-specific components, (ii) the configuration of components in LeBoeuf's Figure 8B, including the alleged arc arrangement and related components, is specific to an earbud, and (iii) Lisogurski does not teach that its sensor can be an earbud. Ex. 1025 at 4:6-20; Ex. 1026 at [0123]. The portions of Lisogurski and LeBoeuf that Petitioners cite for their assertion support this distinction. Ex. 1025 at 4:6-20 (disclosing at most that the sensor can be placed on an "earlobe" or "around or in front of the ear," but not in the ear); Ex. 1026 at [0006] ("earbud"), [0010] ("Light directed into the ear").

177. Because Lisogurski's sensor does not include the related components upon which LeBoeuf's alleged arc arrangement of emitters and detectors in Figures 8A-8B is premised, as explained above, and Petitioners and Dr. Anthony do not argue that Lisogurski would have been modified to include those related

components, a POSITA would not have been motivated to implement LeBoeuf's alleged arc arrangement in Lisogurski nor capable of doing so. Ex. 1026 at FIGS. 8A-8B, [0123]-[0124].

178. Also, because Lisogurski does not teach or suggest that its sensor could be an earbud or placed within the ear, for example, to take measurements from the ear canal, a POSITA would not have modified Lisogurski's sensor based on LeBoeuf's alleged arc arrangement of emitters and detectors, which is premised on related earbud-specific components and is part of an earbud-specific configuration, as explained above. Ex. 1026 at FIGS. 8A-8B, [0123]-[0124].

179. Petitioners and Dr. Anthony also refer to Lisogurski's disclosure "that '[a]ny suitable configuration of light source 316 and detector 318 may be used,' and that 'sensor unit 312 may include multiple light sources and detectors, which may be spaced apart.'" Petition at 53 (quoting Ex. 1025 at 17:42-45); Ex. 1003 at ¶ 262 (same). But a POSITA would not have understood that the alleged arc arrangement in LeBoeuf's Figure 8B would be a suitable configuration for Lisogurski for the reasons explained herein, including that LeBoeuf's alleged arc arrangement is part of an earbud-specific embodiment, whereas Lisogurski is directed to a non-earbud sensor. Ex. 1026 at [0123]; Ex. 1025 at 4:6-20.

180. In addition to LeBoeuf's earbud embodiment shown in Figures 8A-8B that Petitioners and Dr. Anthony rely upon, LeBeouf also discloses non-earbud

monitoring devices that "may … be attached to earlobes, fingers, toes, other digits, etc.," such as monitoring device 70 shown in LeBoeuf's Figures 22A - 22B that is "configured to fit over a finger" or monitoring device 70' in Figure 23 that is "configured to be attached to a body of a subject as a bandage." Ex. 1026 at [0070]-[0072], FIGS. 22A-23, [0157]-[0160], [0164]-[0165]. LeBoeuf's alleged arc arrangement that Petitioners and Dr. Anthony rely upon from the earbud embodiment in Figure 8B, in which emitters 24 and detectors 26 are positioned around speaker 22 in earbud 30, is not included in the non-earbud devices 70 and 70' in Figures 22A-23, which each include only one optical emitter 24, detector 26, and noise detector 26'. Ex. 1026 at FIG. 8B, [0123], FIGS. 22A-23, [0157]-[0160], [0164]-[0165]. A POSITA would have understood that this difference between the earbud and non-earbud embodiments in LeBoeuf further shows that the configuration in LeBoeuf's Figure 8B, including the alleged arrangement, is specific to an earbud due to its unique sound application.

181. A POSITA reviewing Lisogurski and LeBoeuf would have understood that Lisogurski's sensor is comparable, at most, to LeBoeuf's non-earbud embodiments in Figures 22b-23, not the earbud embodiment in Figure 8B. Ex. 1025 at 4:6-20 (fingertip, toe, earlobe, and body for Lisogurski); Ex. 1026 at [0157] (fingers, toes, and earlobes for LeBoeuf's embodiment in FIGS. 22A-22B), [0164] (body for LeBoeuf's embodiment in FIG. 23).

182. For at least these reasons, I disagree with Petitioners' and Dr. Anthony's conclusions for Ground 2 and claims 4-6, 15-16, and 21-22 of the '304 Patent.

C. Ground 3: Obviousness Based on Lisogurski and Tran (Claims 1, 3, 11-13, 19, 20, 26)

183. I understand that Petitioners and Dr. Anthony argue for Ground 3 that claims 1, 3, 11-13, 19, 20, and 26 of the '304 Patent are obvious over Lisogurski and Tran. Petition at 57-67; Ex. 1003 at ¶¶ 318-368.

184. I am informed and understand that Patent Owner has disclaimed claims 1, 3, 11, 19, and 20 of the '304 Patent. Accordingly, I do not provide an opinion as to claims 1, 3, 11, 19, and 20 in relation to Ground 3. With respect to claims 12, 13, and 26, I disagree with Petitioners and Dr. Anthony for at least the reasons provided below.

185. Claim 11 recites a "measurement system comprising: a wearable measurement device for measuring one or more physiological parameters." Ex. 1001 at 37:39-41. Dependent claim 12 further recites, "wherein the measurement system is at least in part configured for selection or identification of an object." Ex. 1001 at 38:20-32. Claim 13 depends on claim 12 and thus includes the same claim limitation. Ex. 1001 at 38:33.

186. Claim 19 recites a "wearable device comprising: a measurement device including a light source comprising a plurality of semiconductor sources for measuring one or more physiological parameters." Ex. 1001 at 38:62-66. Dependent claim 26 further recites, "wherein the wearable device is at least in part configured for selection or identification of an object." Ex. 1001 at 40:26-38.

187. Petitioners and Dr. Anthony assert that the "selection or identification of an object" limitation of claims 12, 13, and 26 is disclosed by Lisogurski, without relying on Tran. Petition at 65-67; Ex. 1003 at ¶¶ 355-356, 362, 367. I disagree.

188. For this limitation, the Petition relies on the Board's finding following remand for the '484 Patent that Lisogurski's sensor allegedly "calculate[es] an amount of a blood constituent, e.g., oxyhemoglobin" and that this allegedly "involves distinguishing and identifying oxyhemoglobin in blood." Petition at 65 (citing Ex. 1016 at 6; Ex. 1014 at 24; Ex. 1025 at 4:36-51). Petitioners also quote the following from the Board's remand decision: "[a]s Lisogurski discloses a method of measuring oxygen saturation that uses different wavelengths to distinguish hemoglobin from oxygen carrying hemoglobin, i.e., oxyhemoglobin, Lisogurski teaches identifying an object, i.e., the blood constituent oxyhemoglobin." Petition at 65 (citing Ex. 1016 at 4-7; Ex. 1025 at 4:36-62; Ex. 1003 at ¶¶ 355-356).

189. I am informed and understand that the Board's remand decision concerning the '484 Patent is currently on appeal.

190. Dr. Anthony also quotes the Board's remand decision concerning the '484 Patent and states that "Lisogurski's calculation and measurement of the amount of oxyhemoglobin exists in blood includes distinguishing and identifying the oxyhemoglobin blood constituent." Ex. 1003 at ¶ 355. Dr. Anthony claims that "[t]his is consistent with my opinions regarding this '484 limitation, which I incorporate by reference as if fully set forth herein." *Id*. (citing Ex. 1010 at ¶¶ 210-223). I note that these paragraphs of Dr. Anthony's declaration for the '484 Patent are not consistent with the Board's findings in the remand decision concerning the '484 Patent. There, Dr. Anthony asserts that "Lisogurski's sensor can identify when an object (e.g., a wrist or ear) is in range of the sensor." Ex. 1010 at ¶ 220. He does not offer opinions in these paragraphs supporting the Board's finding that Lisogurski identifying the oxyhemoglobin blood constituent. Ex. 1010 at ¶¶ 220-223. Dr. Anthony appears to merely restate the Board's findings from the '484 remand decision and does not explain how Lisogurski allegedly meets this limitation through identifying blood constituents, when Lisogurski simply measures a known blood constituent. Ex. 1003 at ¶ 355.

191. As the Board found in the decision concerning the '484 Patent, in the context of the '304 Patent, a POSITA would recognize that identifying an object is different from merely detecting something or measuring a parameter of a presumed object. Ex. 1015 at 10. To identify an object, the system must determine what the

object is, recognizing the object as a particular thing. Ex. 1015 at 10. This is distinct from assuming an object and simply quantifying one of its attributes. Ex. 1015 at 10. The ’304 Patent’s specification is consistent with this approach, describing identification in terms of classifying materials or constituents, such as via spectral analysis and library matching, as opposed to signal measurement. Ex. 1001 at 29:9-16, 35:19-44.

192. Distinguishing an object is distinct from measurement, and the specification explains this in further detail with examples. For example, “most drug packaging materials are at least partially transparent in this wavelength range, so that drug *compositions* may be detected and identified through the packaging….” Ex. 1001 at 28:58-65 (emphasis added). The specification explains that “many solids have distinct spectral signatures in the [short wave infrared (SWIR)], so particular solids may be identified using stand-off detection or remote sensing. For instance, many explosives have unique signatures in the SWIR.” Ex. 1001 at 20:45-49.

193. The specification describes spectral techniques that support identification. For example, the specification explains that certain blood constituents other than glucose may have spectral features that overlap with that of glucose. Ex. 1001 at 4:58-62, 18:50-54. To distinguish between blood constituents, the ’304 Patent describes using “pattern matching algorithms and other software and mathematical methods to identify the blood constituents of interest.” Ex. 1001 at

4:58-62, 35:17-44. It also describes "using a wider wavelength range and using more sampling wavelengths [to] improve the ability to discriminate one signal from another." Ex. 1001 at 35:41-44.

194. The specification describes signal processing techniques that support object identification. "Various mathematical derivatives, including the first and second derivatives, may help to accentuate differences between spectra." Ex. 1001 at 20:17-19. Additionally, "the spectrum may be correlated with a library of known spectra to determine the overlap integrals." Ex. 1001 at 35:20-21. The specification explains that "[t]his is just one way to perform the signal processing, and many other techniques, algorithms, and software may be used and would fall within the scope of this disclosure." Ex. 1001 at 35:23-26.

195. Lisogurski is directed to a physiological monitoring system incorporating a pulse oximeter to non-invasively measure oxygen saturation. Ex. 1025 at 3:61-4:41. Lisogurski describes a system where a wearable sensor emits light at two wavelengths and detects the transmitted or reflected light with a detector. Ex. 1025 at 4:42-62. The system calculates a physiological parameter based on the ratio of absorbed light at the two wavelengths. Ex. 1025 at FIG. 4, 4:52-62.

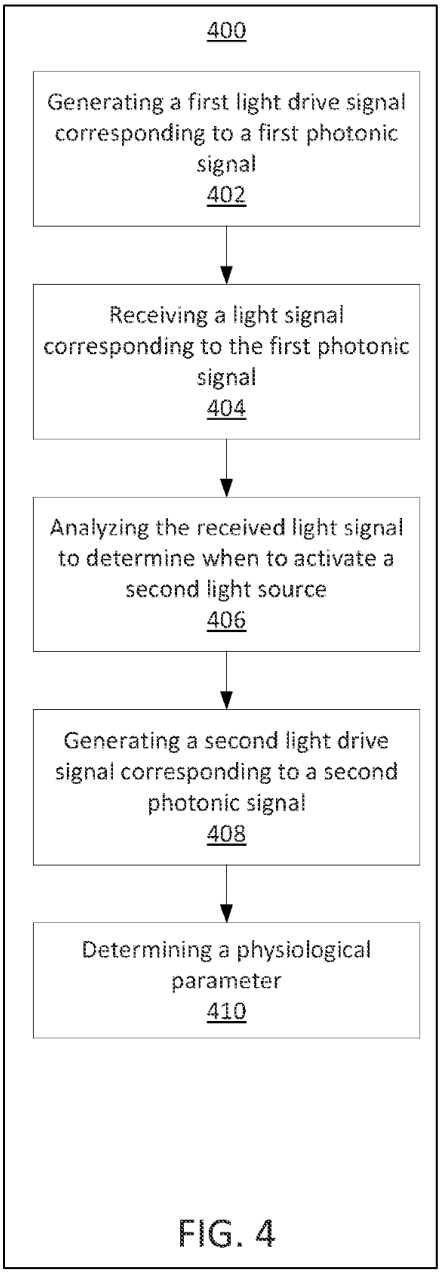

Ex. 1025 at FIG. 4

196. Lisogurski is describing oximetry, which exclusively focuses on one blood constituent, hemoglobin and measuring the ratio of oxygenated and deoxygenated hemoglobin, without discriminating hemoglobin from other blood constituents. Ex. 1025 at 3:61-4:3. In other words, Lisogurski is designed to monitor

a known constituent (hemoglobin) and to compute a known metric (oxygen saturation) from the optical signals. Ex. 1025 at 3:61-4:3.

197. A POSITA would recognize that Lisogurski's pulse oximeter is performing parameter measurement, not object identification. Ex. 1025 at 3:61-4:3. Lisogurski operates on the presupposition that the object of interest, hemoglobin, is present. Ex. 1025 at 4:35-41. It uses known characteristics of that constituent to estimate oxygen saturation. Ex. 1025 at 4:35-41. Lisogurski does not include any step where the system attempts to determine what the substance or object is. Ex. 1025 at 4:35-41. Instead, Lisogurski assumes the object. Ex. 1025 at 4:35-41. A POSITA would understand that this approach does not amount to identifying an object as required under the claim construction.

198. To identify an object as required by claims 12, 13, and 26, a POSITA would understand that discernment of the object's identity is required. The '304 Patent describes how a wearable device may use spectral data and algorithms to classify unknown samples, identifying them through techniques including spectral analysis and library matching, as opposed to simply signal measurement. Ex. 1001 at 29:9-16, 35:19-44. It discloses several "examples of some of the methods of improving the ability to discriminate between different constituents," Ex. 1001 at 20:51-23. This is object identification.

199. For at least these reasons, I disagree with Petitioners' and Dr. Anthony's conclusions for Ground 3 and claims 12, 13, and 26 of the '304 Patent.

D. Ground 4: Obviousness Based on Lisogurski, LeBoeuf, and Tran (Claims 2, 4-6, 12-16, 21-22, 26-27)

200. I understand that Petitioners and Dr. Anthony argue for Ground 4 that claims 2, 4-6, 12-16, 21-22, and 26-27 of the '304 Patent are obvious over Lisogurski, LeBoeuf, and Tran. Petition at 57-67; Ex. 1003 at ¶¶ 318-368.

201. Ground 4 is similar to Grounds 2 and 3 except that Petitioners and Dr. Anthony argue the combination of Lisogurski and LeBoeuf (the only asserted references in Ground 2) with Tran—which includes the combination of Lisogurski and Tran (the only asserted references in Ground 3) with LeBoeuf—for Ground 4. Petition at 8; Ex. 1003 at ¶ 70. Petitioners' and Dr. Anthony's analysis for Ground 4 does not address any of the aforementioned deficiencies regarding Lisogurski and LeBoeuf explained above for Ground 2 or rely upon Tran to cure those deficiencies. *Supra*, § X.B. Specifically, their analysis does not address the "reflective surface" limitations of claims 2, 14, 27 or the "arc" limitations claims 4-6, 15-16, and 21-22. Petition at 60-67; Ex. 1003 at ¶¶ 334-368. It also does not address any of the aforementioned deficiencies regarding Lisogurski and Tran explained above for Ground 3 or rely upon LeBoeuf to cure those deficiencies. *Supra*, § X.C. Specifically, their analysis regarding the "selection or identification of an object"

limitation of claims 12, 13, and 26 does not rely upon LeBoeuf. Petition at 65-67; Ex. 1003 at ¶¶ 355-356, 362, 367.

202. Therefore, Lisogurski, LeBoeuf, and Tran do not render obvious claims 2, 4-6, 12-16, 21-22, and 26-27 for at least the same reasons explained above with respect to Grounds 2 and 3.

E. Ground 5: Obviousness Based on Lisogurski and Carlson (Claims 1, 3, 11, 19, 20)

203. I understand that Petitioners and Dr. Anthony argue for Ground 5 that claims 1, 3, 11, 19, and 20 of the ’304 Patent are obvious over Lisogurski and Carlson. Petition at 68-74; Ex. 1003 at ¶¶ 369-401.

204. I am informed and understand that Patent Owner has disclaimed claims 1, 3, 11, 19, and 20 of the ’304 Patent. Accordingly, I have not been asked to offer opinions for claims 1, 3, 11, 19, and 20 and Ground 5.

F. Ground 6: Obviousness Based on Lisogurski, LeBoeuf, and Carlson (Claims 2, 4-6, 14-16, 21-22, 27)

205. I understand that Petitioners and Dr. Anthony argue for Ground 6 that claims 2, 4-6, 14-16, 21-22, and 27 of the ’304 Patent are obvious over Lisogurski, LeBoeuf, and Carlson. Petition at 68-74; Ex. 1003 at ¶¶ 369-401.

206. Ground 6 is similar to Ground 2 except that Petitioners and Dr. Anthony argue the combination of Lisogurski and LeBoeuf (the only asserted references in Ground 2) with Carlson for Ground 6. Petition at 8; Ex. 1003 at ¶ 70. Also, the only

limitations addressed for Grounds 5-8 are limitations [1.c], [11.c], and [19.c] and "the 'pulse rate' limitations" of claims 13 and 20. Petition at 72-74; Ex. 1003 at ¶¶ 382-401. Petitioners' and Dr. Anthony's analysis for Ground 6 does not address any of the aforementioned deficiencies regarding Lisogurski and LeBoeuf explained above for Ground 2 or rely upon Carlson to cure those deficiencies. *Supra*, § X.B.

207. Therefore, Lisogurski, LeBoeuf, and Carlson do not render obvious claims 2, 4-6, 14-16, 21-22, and 27 for at least the same reasons explained above with respect to Ground 2.

G. Ground 7: Obviousness Based on Lisogurski, Tran, and Carlson (Claims 1, 3, 11-13, 19, 20, 26)

208. I understand that Petitioners and Dr. Anthony argue for Ground 7 that claims 1, 3, 11-13, 19, 20, and 26 of the '304 Patent are obvious over Lisogurski, Tran, and Carlson. Petition at 68-74; Ex. 1003 at ¶¶ 369-401.

209. I am informed and understand that Patent Owner has disclaimed claims 1, 3, 11, 19, and 20 of the '304 Patent. Accordingly, I have not been asked to render opinions regarding claims 1, 3, 11, 19, and 20 and Ground 7.

210. As to claims 12, 13, and 26, Ground 7 is similar to Ground 3 except that Petitioners and Dr. Anthony argue the combination of Lisogurski and Tran (the only asserted references in Ground 3) with Carlson for Ground 7. Petition at 8; Ex. 1003 at ¶ 70. Also, the only limitations addressed for Grounds 5-8 are limitations [1.c],

[11.c], and [19.c] and "the 'pulse rate' limitations" of claims 13 and 20. Petition at 72-74; Ex. 1003 at ¶¶ 382-401. Petitioners' and Dr. Anthony's analysis for Ground 7 does not address any of the aforementioned deficiencies regarding Lisogurski and Tran explained above for Ground 3 or rely upon Carlson to cure those deficiencies. *Supra*, § X.C.

211. Therefore, Lisogurski, Tran, and Carlson do not render obvious claims 12, 13, and 26 for at least the same reasons explained above with respect to Ground 3.

H. Ground 8: Obviousness Based on Lisogurski, LeBoeuf, Tran, and Carlson (Claims 2, 4-6, 12-16, 21-22, 26-27)

212. I understand that Petitioners and Dr. Anthony argue for Ground 8 that claims 2, 4-6, 12-16, 21-22, and 26-27 of the '304 Patent are obvious over Lisogurski, LeBoeuf, Tran, and Carlson. Petition at 68-74; Ex. 1003 at ¶¶ 369-401.

213. Ground 8 is similar to Ground 4 except that Petitioners and Dr. Anthony argue the combination of Lisogurski, LeBoeuf, and Tran (the only asserted references in Ground 4) with Carlson for Ground 8. Petition at 8; Ex. 1003 at ¶ 70. Also, the only limitations addressed for Grounds 5-8 are limitations [1.c], [11.c], and [19.c] and "the 'pulse rate' limitations" of claims 13 and 20. Petition at 72-74; Ex. 1003 at ¶¶ 382-401. Petitioners' and Dr. Anthony's analysis for Ground 8 does not address any of the aforementioned deficiencies regarding Lisogurski, LeBoeuf, and

Tran explained above for Ground 4 or rely upon Carlson to cure those deficiencies. *Supra*, §§ X.B., X.C., X.D.

214. Therefore, Lisogurski, LeBoeuf, Tran, and Carlson do not render obvious claims 2, 4-6, 12-16, 21-22, and 26-27 for at least the same reasons explained above with respect to Ground 4.

I. Ground 9: Obviousness Based on Lisogurski, Tran, and Marbach (Claims 1, 3, 11-13, 19, 20, 26)

215. I understand that Petitioners and Dr. Anthony argue for Ground 9 that claims 1, 3, 11-13, 19, 20, and 26 of the ’304 Patent are obvious over Lisogurski, Tran, and Marbach. Petition at 74-77; Ex. 1003 at ¶¶ 402-407.

216. I am informed and understand that Patent Owner has disclaimed claims 1, 3, 11, 19, and 20 of the ’304 Patent. Accordingly, I have not been asked to render any opinions opinion as to claims 1, 3, 11, 19, and 20 in relation to Ground 9.

217. As to claims 12, 13, and 26, Ground 9 is similar to Ground 3 except that Petitioners and Dr. Anthony argue the combination of Lisogurski and Tran (the only asserted references in Ground 3) with Marbach for Ground 9. Petition at 8; Ex. 1003 at ¶ 70. Also, the only limitations addressed for Grounds 9-10 are the “regression signal processing methodologies or multivariate techniques” limitations of claims 12, 13, and 26. Petition at 74-77; Ex. 1003 at ¶¶ 402-407. Petitioners’ and Dr. Anthony’s analysis for Ground 9 does not address any of the aforementioned

deficiencies regarding Lisogurski and Tran explained above for Ground 3 or rely upon Marbach to cure those deficiencies. *Supra*, § X.C.

218. Therefore, Lisogurski, Tran, and Marbach do not render obvious claims 12, 13, and 26 for at least the same reasons explained above with respect to Ground 3.

J. Ground 10: Obviousness Based on Lisogurski, Tran, Carlson, and Marbach (Claims 1, 3, 11-13, 19, 20, 26)

219. I understand that Petitioners and Dr. Anthony argue for Ground 10 that claims 1, 3, 11-13, 19, 20, and 26 of the ’304 Patent are obvious over Lisogurski, Tran, Carlson, and Marbach. Petition at 74-77; Ex. 1003 at ¶¶ 402-407.

220. I am informed and understand that Patent Owner has disclaimed claims 1, 3, 11, 19, and 20 of the ’304 Patent. Accordingly, I have not been asked to render opinions as to claims 1, 3, 11, 19, and 20 in relation to Ground 10.

221. As to claims 12, 13, and 26, Ground 10 is similar to Ground 7 except that Petitioners and Dr. Anthony argue the combination of Lisogurski, Tran, and Carlson (the only asserted references in Ground 7) with Marbach for Ground 10. Petition at 8; Ex. 1003 at ¶ 70. Also, the only limitations addressed for Grounds 9-10 are the “regression signal processing methodologies or multivariate techniques” limitations of claims 12, 13, and 26. Petition at 74-77; Ex. 1003 at ¶¶ 402-407. Petitioners’ and Dr. Anthony’s analysis for Ground 10 does not address any of the

aforementioned deficiencies regarding Lisogurski, Tran, and Carlson explained above for Ground 7 or rely upon Marbach to cure those deficiencies. *Supra*, §§ X.C., X.G.

222. Therefore, Lisogurski, Tran, Carlson, and Marbach do not render obvious claims 12, 13, and 26 for at least the same reasons explained above with respect to Ground 7.

XI. CONCLUSION

223. In my opinion, the challenged claims of the ’304 Patent would not have been obvious to a POSITA as of the priority date of the ’304 Patent in view of the asserted references that Petitioners and Dr. Anthony rely upon in Grounds 1-10. Accordingly, it is my opinion that all challenged claims of the ’304 Patent are patentable over the asserted references.

224. I reserve the right to modify or supplement my opinions, if necessary, based on further review and analysis of the evidence in this case, including review and analysis of information that may be provided to me subsequent to the date of this declaration.

I declare that all statements made herein of my own knowledge are true and all statements made on information and belief are believed to be true, and further that these statements were made with the knowledge that willful false statements and the like so made are punishable by fine or imprisonment, or both, under Section 1001 of Title 18 of the United States Code.

Date: November 12, 2025

Igor Efimov

Igor Efimov, Ph. D.