UNITED STATES PATENT AND TRADEMARK OFFICE

BEFORE THE PATENT TRIAL AND APPEAL BOARD

SONOS, INC.
Petitioner

v.

IMPLICIT, LLC
Patent Owner

Case: To Be Assigned

Patent No. 8,942,252

PETITION FOR *INTER PARTES* REVIEW OF U.S. PATENT NO. 8,942,252 PURSUANT TO 35 U.S.C. §311 *et seq*. and 37 CFR §42.1 *et seq*.

TABLE OF CONTENTS

TABLE OF CONTENTS i

TABLE OF AUTHORITIES iii

TABLE OF EXHIBITS v

I. INTRODUCTION 1

II. MANDATORY NOTICES UNDER 37 CFR §42.8 1

III. STANDING TO FILE PETITION UNDER 37 CFR §§42.101 – 103 3

IV. PETITION REQUIREMENTS UNDER 37 CFR §42.104 4

V. OVERVIEW OF '252 PATENT 7

VI. CLAIM CONSTRUCTION 18

A. "device time" 18

B. "rendering time" 18

C. Sending/receiving "a plurality of master rendering times" 19

D. "smooth a rendering time differential . . ." / "determining a smoothed rendering time differential . . ." 20

VII. OVERVIEW OF CHALLENGES 24

VIII. OVERVIEW OF JANEVSKI 26

IX. DETAILED ANALYSIS OF CHALLENGE#1 35

A. Independent Claim 1 36

B. Dependent Claims 2-3 & 8 47

C. Independent Claim 11 50

D. Dependent Claim 17 56

X. DETAILED ANALYSIS OF CHALLENGES#2-4.....57

XI. DETAILED ANALYSIS OF CHALLENGE#5 64

XII. CONCLUSION.....68

TABLE OF AUTHORITIES

CASES

Ex Parte Peter Hartmann, Ching Tat Lai, & Leon R. Mitoulas,
APPEAL 2012-007518, 2015 WL 581245 (Feb. 10, 2015).....47

In re Translogic Tech., Inc.,
504 F.3d 1249 (Fed. Cir. 2007) 5

Karl Storz Endoscopy-Am., Inc., 7,420,151 B2,
2017 WL 950769 (Mar. 8, 2017).....47

KSR Int'l Co. v. Teleflex Inc.,
550 U.S. 398 (2007).....42

Odom v. Microsoft Corp.,
429 F. App'x 967 (Fed. Cir. 2011).....42

STATUTES

35 U.S.C. § 102(a) 25

35 U.S.C. § 102(b) 25

35 U.S.C. § 102(e) 25

35 U.S.C. § 103.....5

35 U.S.C. § 103(a) ..... *passim*

35 U.S.C. § 311.....1

35 U.S.C. § 312(a)(2).....1

35 U.S.C. § 314(a) 1

35 U.S.C. § 315(b) 3

REGULATIONS

37 C.F.R. § 42.101(a).....3

37 C.F.R. § 42.101(b) 3

37 C.F.R. § 42.101(c).....4

37 C.F.R. § 42.104(b)(3)..... 5, 18

37 CFR § 42.1 1

37 CFR § 42.100(b) 5

37 CFR § 42.101 3

37 CFR § 42.102(a).....4

37 CFR § 42.104(a).....4

37 CFR § 42.104(b)(1).....4

37 CFR § 42.104(b)(2).....5

37 CFR § 42.15(a)(1) 4

37 CFR § 42.15(a)(2) 4

37 CFR § 42.22 1

37 CFR § 42.8(b)(1).....1

37 CFR § 42.8(b)(2).....2

37 CFR § 42.8(b)(3).....3

37 CFR § 42.8(b)(4).....3

TABLE OF EXHIBITS

EXHIBIT	DESCRIPTION
Ex.1001	U.S. Patent No. 8,942,252 to Balassanian et al.
Ex.1002	Patent Owner's Original Complaint in *Implicit, LLC v. Sonos, Inc*., Case No. 1:17-cv-00259-LPS (D. Del.) (D.I. 1, dated 03/10/2017)
Ex.1003	Patent Owner's First Amended Complaint in *Implicit, LLC v. Sonos, Inc*., Case No. 1:17-cv-00259-LPS (D. Del.) (D.I. 34, dated 10/06/2017)
Ex.1004	Petitioner's Answer, Affirmative Defenses, and Counterclaims to Patent Owner's First Amended Complaint in *Implicit, LLC v. Sonos, Inc*., Case No. 1:17-cv-00259-LPS (D. Del.) (D.I. 36, dated 11/20/2017)
Ex.1005	Petitioner's First Amended Answer, Affirmative Defenses, and Counterclaims to Patent Owner's First Amended Complaint in *Implicit, LLC v. Sonos, Inc*., Case No. 1:17-cv-00259-LPS (D. Del.) (D.I. 39, dated 1/11/2018)
Ex.1006	Patent Owner's Initial Claim Charts in *Implicit, LLC v. Sonos, Inc*., Case No. 1:17-cv-00259-LPS (D. Del.) (01/22/2018)
Ex.1007	U.S. Patent No. 7,269,338 to Janevski
Ex.1008	U.S. Provisional Patent Application No. 60/341,574
Ex.1009	Expert Declaration of Roman Chertov
Ex.1010	Publication entitled "Fault-Tolerant Clock Synchronization for Distributed Systems with High Message Delay Variation" by Marcelo Moraes de Azevedo *et al*.
Ex.1011	Publication entitled "Network Time Protocol (Version 3) Specification, Implementation and Analysis" by David L. Mills
Ex.1012	Publication entitled "Time Synchronization Over Networks Using Convex Closures" by Jean-Marc Berthaud
Ex.1013	U.S. Patent No. 6,278,710 to Eidson
Ex.1014	U.S. Patent No. 5,642,171 to Baumgartner
Ex.1015	Publication entitled "Data Smoothing" by J.T. Grissom et al.
Ex.1016	Publication entitled "Smoothing Methods in Statistics" by Jeffrey S. Simonoff

Ex.1017	“Modern Dictionary of Electronics,” 7th Edition (1999)
Ex.1018	Printout of “Statistics Glossary v1.1” by Easton & McColl, http://www.stats.gla.ac.uk/steps/glossary/index.html (last updated September 1997)

I. INTRODUCTION

Pursuant to 35 U.S.C. §311 *et seq*. and 37 CFR §42.1 *et seq*., Sonos, Inc. ("Petitioner" or "Sonos") hereby petitions the Patent Trial and Appeal Board (the "Board") to institute an *Inter Partes* Review of Claims 1-3, 8, 11, and 17 of U.S. Patent No. 8,942,252 ("the '252 Patent"; Ex.1001). The '252 Patent issued on January 27, 2015. According to USPTO records, the '252 Patent is currently assigned to Implicit, LLC ("Patent Owner" or "Implicit").

This petition for *Inter Partes* Review (the "Petition") demonstrates a reasonable likelihood that Petitioner will prevail with respect to claims 1-3, 8, 11, and 17 of the '252 Patent (the "Challenged Claims"). 35 U.S.C. §314(a). Petitioner asserts that the Challenged Claims are anticipated by and/or obvious over the asserted prior art.

Pursuant to 37 CFR §42.22, Petitioner respectfully requests that the Board review the asserted prior art and below analysis, institute a trial for *Inter Partes* Review of the Challenged Claims, and cancel those claims as unpatentable.

II. MANDATORY NOTICES UNDER 37 CFR §42.8

Real Party-In-Interest – 37 CFR §42.8(b)(1): Pursuant to 35 U.S.C. §312(a)(2), the real party-in-interest is Sonos, Inc., a corporation organized under the laws of the State of Delaware with a principal place of business at 614 Chapala Street, Santa Barbara, California 93101.

Related Matters – 37 CFR §42.8(b)(2): On March 10, 2017, Patent Owner filed a Complaint against Petitioner in the U.S. District Court for the District of Delaware that alleged infringement of the '252 Patent as well as U.S. Patent No. 7,391,791 (the "Litigation"). Ex.1002. The case was assigned Civil Action No. 17-cv-00259-LPS and is currently pending before Judge Leonard P. Stark. *Id*.

After Petitioner moved to dismiss Patent Owner's Complaint under Federal Rule of Civil Procedure 12(b)(6) for failure to state a claim upon which relief can be granted, Patent Owner filed a First Amended Complaint for Patent Infringement on October 6, 2017. Ex.1003.

On November 20, 2017, Petitioner filed its original Answer, Affirmative Defenses, and Counterclaims to Patent Owner's First Amended Complaint. Ex.1004. On January 11, 2018, Petitioner then filed a First Amended Answer, Affirmative Defenses, and Counterclaims. Ex.1005.

Patent Owner also recently served its Initial Claim Charts in the Litigation, which demonstrate how Patent Owner is interpreting the Challenged Claims of the '252 Patent in order to read such claims onto Petitioner's networked audio system (the "Accused Sonos Products"). Ex.1006.

Lead/Back-Up Counsel and Service Info – 37 CFR §42.8(b)(3)-(4):

Lead Counsel

Rory P. Shea
Lee Sullivan Shea & Smith LLP
224 N Desplaines St, Suite 250
Chicago, Illinois 60661

Tel: (312) 754-9602
Fax: (312) 754-9603
Email: shea@ls3ip.com
USPTO Reg. No. 60,529

Back-up Counsel

Cole B. Richter
Lee Sullivan Shea & Smith LLP
224 N Desplaines St, Suite 250
Chicago, Illinois 60661

Tel: (312) 754-9602
Fax: (312) 754-9603
Email: richter@ls3ip.com
USPTO Reg. No. 65,398

George I. Lee
Lee Sullivan Shea & Smith LLP
224 North Desplaines Street, Suite 250
Chicago, Illinois 60661

Tel: (312) 754-9602
Fax: (312) 754-9603
Email: lee@ls3ip.com
USPTO Reg. No. 39,269

Michael P. Boyea
Lee Sullivan Shea & Smith LLP
224 N Desplaines St, Suite 250
Chicago, Illinois 60661

Tel: (312) 754-9602
Fax: (312) 754-9603
Email: boyea@ls3ip.com
USPTO Reg. No. 70,248

Service Information – 37 CFR §42.8(b)(4): Petitioner consents to electronic service at the addresses of lead and back-up counsel listed above.

III. STANDING TO FILE PETITION UNDER 37 CFR §§42.101 – 103

Standing – 37 CFR §42.101: Sonos has not filed a civil action challenging the validity of a claim of the '252 Patent. *See* 37 C.F.R. §42.101(a). In addition, this Petition has been filed within one year after Sonos was served with a jurisdictionally-proper complaint alleging infringement of the '252 Patent on March 10, 2017, i.e., the Litigation. *See* 35 U.S.C. §315(b); 37 C.F.R. §42.101(b);

Ex.1002. Petitioner is also not estopped from challenging Claims 1-3, 8, 11, and 17 of the '252 Patent on the grounds identified in the Petition. *See* 37 C.F.R. §42.101(c). Thus, the filing of this Petition is proper under 37 CFR §42.101.

Timing – 37 CFR §42.102: The '252 Patent was filed before March 16, 2013, was granted on January 27, 2015, and has had no post-grant review initiated. Accordingly, the timing for this Petition is proper under 37 CFR §42.102(a).

Fees – 37 CFR §42.103: With the filing of this Petition, Sonos is paying both the $15,500 request fee set forth in 37 CFR §42.15(a)(1), as well as the $15,000 post-institution fee set forth in 37 CFR §42.15(a)(2). However, Petitioner authorizes a debit from Deposit Account No. 50-6632 for whatever additional payment is necessary in filing and/or granting this Petition.

IV. PETITION REQUIREMENTS UNDER 37 CFR §42.104

Certification – 37 CFR §42.104(a): Petitioner certifies that the '252 Patent is available for *Inter Partes* Review and that the Petitioner is not barred or estopped from requesting an *Inter Partes* Review of the Challenged Claims on the grounds identified in the Petition.

Claims Challenged – 37 CFR §42.104(b)(1): Petitioner requests review of Challenged Claims 1-3, 8, 11, and 17 of the '252 Patent.

Specific Statutory Grounds – 37 CFR §42.104(b)(2): For the reasons set forth in detail below, Petitioner submits that the Challenged Claims of the '252 Patent are obvious under 35 U.S.C. §103 in view of the asserted prior art.

Claim Construction – 37 CFR §42.104(b)(3): In an *Inter Partes* Review, claim terms are given their "broadest reasonable construction in light of the specification of the patent in which it appears." *See* 37 CFR §42.100(b). Under this broadest reasonable construction standard, claim terms generally are given their ordinary and customary meaning, as would be understood by one of ordinary skill in the art in the context of the entire disclosure. *See In re Translogic Tech., Inc.*, 504 F.3d 1249, 1257 (Fed. Cir. 2007).

Petitioner respectfully submits that Patent Owner's own broad interpretation of the Challenged Claims of the '252 Patent in the Litigation should also be considered when construing the claim terms here, because those positions are informative of what Patent Owner considers to be the "broadest reasonable construction" of the claims.

In the "Claim Construction" section below, Petitioner has identified claim terms that should be construed in order to resolve the challenges herein, along with proposed constructions that reflect the terms' "broadest reasonable construction" as understood by a person having ordinary skill in the art ("PHOSITA") in light of

both the specification of the '252 Patent and Patent Owner's own interpretation of the Challenged Claims in the Litigation.

To be clear, Petitioner is only proposing constructions for terms that are necessary to resolve the specific challenges herein, and all of Petitioner's proposed constructions have been made under the "broadest reasonable construction" standard rather than the *Phillips* standard that governs the Litigation. Thus, Petitioner's proposed constructions herein shall not be used to limit Petitioner's ability to propose additional and/or different claim constructions in the Litigation or another proceeding. To the contrary, Petitioner expressly reserves the right to advocate additional and/or different claim interpretations in the Litigation or any other proceeding in accordance with the claim construction standards applied in such a proceeding.

Likewise, to the extent that any of Petitioner's proposed constructions are based on Patent Owner's interpretation of the Challenged Claims of the '252 Patent in the Litigation, such constructions certainly do not constitute an agreement with Patent Owner's interpretation. Rather, Petitioner's position is simply that it is appropriate to considered Patent Owner's interpretation of the Challenged Claims in the Litigation (which Patent Owner must view as reasonable) when determining the "broadest reasonable construction" here.

V. OVERVIEW OF '252 PATENT

The '252 Patent was filed on March 25, 2013 as U.S. Patent Application No. 13/850,260 ("the '260 Application"). Ex.1001. The priority claim set forth in the '252 Patent is as follows:

> This application is a continuation of U.S. application Ser. No. 12/710,146, filed Feb. 22, 2010, which is a continuation of U.S. application Ser. No. 11/933,194, filed Oct. 31, 2007, now abandoned, which is a continuation of U.S. application Ser. No. 10/322,335, filed Dec. 17, 2002, now U.S. Pat. No. 7,391,791, which claims the benefit of U.S. Provisional Application No. 60/341,574, filed Dec. 17, 2001.

Id. The '252 Patent ultimately issued on January 27, 2015 with a total of 17 claims, of which Claims 1 and 17 are independent and the remainder are dependent. *Id*.

In general, the '252 Patent is directed to synchronizing the rendering of content at multiple "rendering devices," examples of which may include "video rendering device" (e.g., a video display), an "audio rendering device" (e.g., a stereo system) and a "text rendering device." *Id*., Abstract, FIG. 1, 3:64-4:1.

In its "Background," the '252 Patent explains that rendering content on multiple renderer devices "in a synchronized manner" is made difficult by the fact that the rendering devices "may have different time domains." *Id*., 1:40-42. For instance, the '252 Patent notes that video and audio rendering devices "may have

system clocks that operate at slightly different frequencies," which may result in the video and audio content of a multimedia presentation "gradually appear[ing] to the person viewing the presentation to be out of synchronization." *Id*., 1:42-46.

In addition, the '252 Patent explains that a given rendering device may have "multiple time domains," which may make it "even more difficult" to render content on multiple renderer devices "in a synchronized manner." *Id*., 1:46-49. For example, the '252 Patent notes that an audio rendering device may have both "a system clock" and also "a clock on a digital signal processing ("DSP") interface card," which "may result in the presentation becoming even more quickly out of synchronization." *Id*., 1:49-53.

Thus, the '252 Patent's objective is to provide a method and system that synchronizes the rendering of content at rendering devices having different time domains. *Id*., 1:54-56, 2:17-20. One embodiment of the '252 Patent's disclosed system is illustrated in FIG. 1:

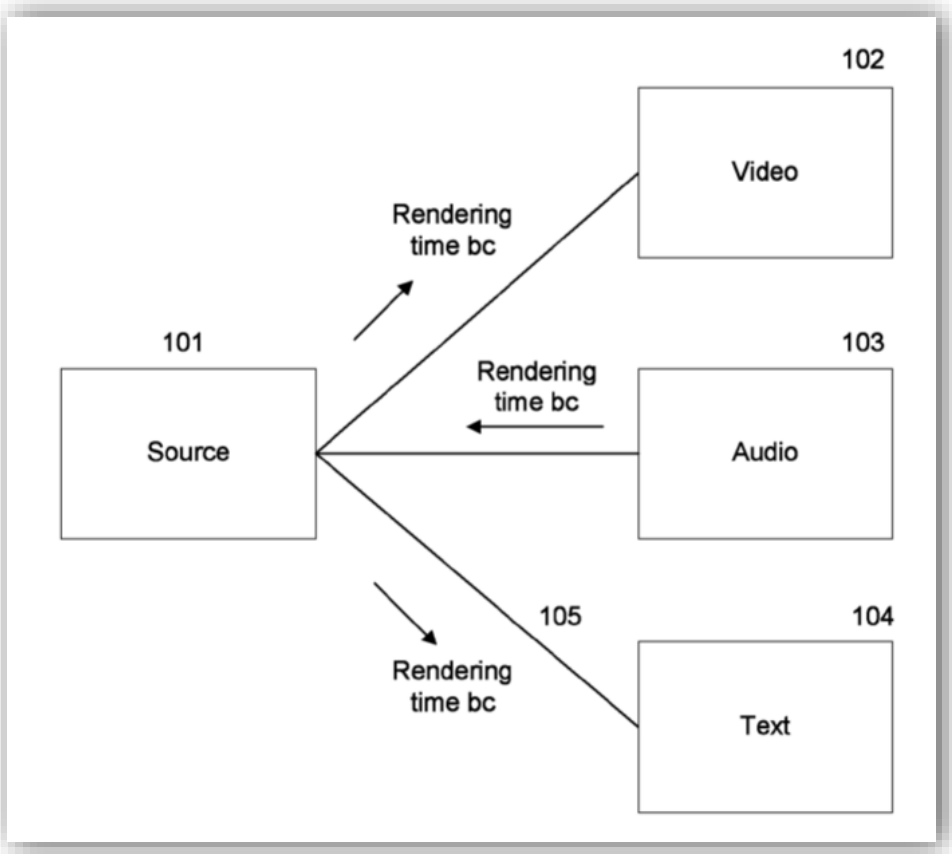

Id., FIG. 1. As shown in FIG. 1, a source device 101 distributes content of a presentation to a video rendering device 102, an audio rendering device 103, and a text rendering device 104 via a communication link 105. *Id*., FIG. 1, 3:64-4:1.

In the disclosed system, each rendering device may have both a "device time" and a "rendering time." *Id*., 2:18-20. The '252 Patent states that a "device time is the time indicated by a designated clock (e.g., system clock) of the rendering device." *Id*., 2:20-21. On the other hand, the '252 Patent states that "rendering time is the time represented by the amount of content that has been rendered by that rendering device." *Id*., 2:22-23; *see also* 7:52-54 (stating that

"rendering time continues to reflect the amount of the content that has been effectively rendered").

In this respect, the "rendering time of content at a rendering device has a 'corresponding' device time, which is the device time at which the rendering time occurred." *Id*., 2:26-28. To illustrate this, the '252 Patent provides an example in which a video rendering device begins rendering at a device time of 30 minutes and then displays 450 video frames at a rate of 30 frames/second. *Id*., 2:23-32. In this example, the video rendering device's rendering time after it has rendered the 450th frame would be 15 seconds, and the corresponding device time would be 30 minutes and 15 seconds. *Id*.

"To help ensure synchronization of rendering devices, the synchronization system designates one of the rendering devices as a master rendering device and designates all other rendering devices as slave rendering devices." *Id*., 2:32-36. For example, in the embodiment illustrated in FIG. 1, the audio rendering device 103 is designated as the "master" device and the video and text rendering devices 102 and 104 are designated as "slave" devices. *Id*., FIG. 1, 4:19-24.

Once the master and slave roles have been assigned, each slave in the synchronization system "determines whether it is synchronized with the master rendering time." *Id*., Abstract, 2:41-46. The '252 Patent discloses a two-phase process for making this determination.

In a first phase of the disclosed process, each slave exchanges "device time information" with the master in order to determine a differential between the master and slave devices' respective devices times (which the '252 Patent also refers to as a "time domain differential"). *Id*., 3:31-63. The '252 Patent's preferred process for determining a differential between two devices' respective device times is illustrated in FIG. 2:

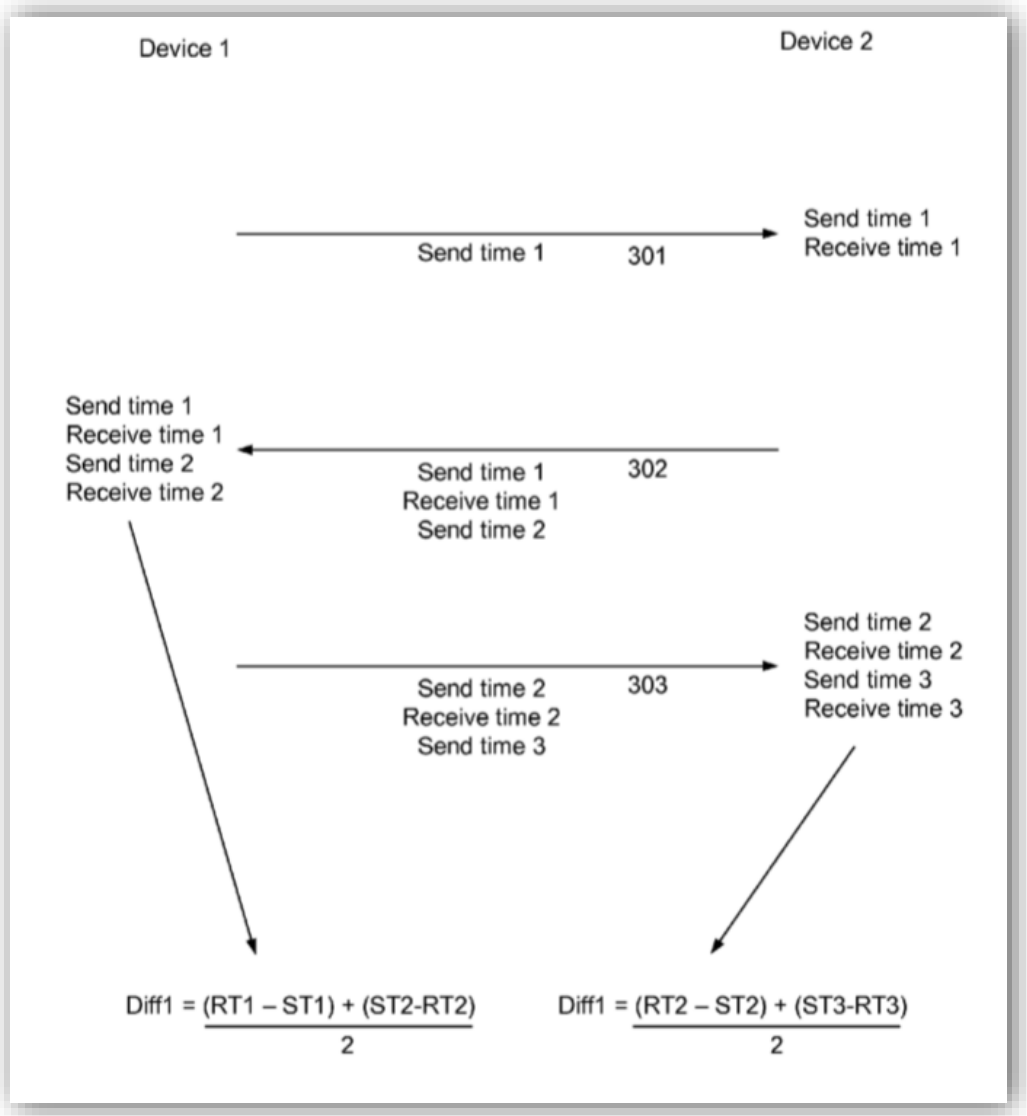

Id., FIG. 2. As shown, this process may generally include the following steps:

1. A first device (such as master 103) may send a second device (such as slave 102) an originating message 301 that includes the first device's current device time when the originating message 301 is sent, which may be referred to as "sendtime1" or "ST1" for short;
2. The second device may record its current device time when it receives the originating message 301, which may be referred to as "receivetime1" or "RT1" for short;
3. The second device may send the first device a reply message 302 that includes the second device's current device time when the reply message 302 is sent, which may be referred to as "sendtime2" or "ST2" for short, as well as sendtime1 and receivetime1;
4. The first device may record its current device time when it receives the reply message 302, which may be referred to as "receivetime2" or "RT2" for short; and
5. The differential (or "Diff") between the devices' respective device times may then be calculated using the following equation:

$$\text{Diff} = ((RT1-ST1)+(ST2-RT2))/2$$

Id., 4:50-67.

In the '252 Patent's disclosed system, exchanges such as this are carried out between the master and each slave in order to determine a respective differential

between the master's device time and each slave's device time. *Id*., 3:31-63, 5:39-64. Additionally, the '252 Patent discloses that a differential between the respective device times of a rendering device and the source device could be determined in a similar manner. *Id*., 5:39-64.

In addition, the '252 Patent discloses that the differential between two devices' respective device times "can also be smoothed using various techniques such as averaging the last several time domain differentials using a decaying function to limit the impact of the oldest time domain differentials." *Id*., 7:16-21. For instance, the '252 Patent discloses that "[i]n one embodiment, the synchronization system saves the values of the last eight pairs of time domain differentials (i.e., ST2−RT2 and RT1−ST1) and uses the average of the minimum value of the set of eight larger differentials and the maximum value of the set of eight smaller differentials as the time domain differential." *Id*., 7:21-26.

Turning to the second phase of the disclosed process, after the rendering devices in the system begin to render content, the master may periodically send each slave a "rendering time message" that includes an indication of the master device's rendering time. *Id*., Abstract, 2:38-40, 4:24-32, 7:59-8:3, FIG. 9. In turn, each slave may use the indication of the master's rendering time and the determined differential between the master and slave devices' respective device

times to calculate a difference between the master's rendering time and the slave's rendering time. *Id*., Abstract, 2:46-65, 3:49-52, 4:32-38, 8:4-23, FIG. 10.

For instance, the '252 Patent discloses one embodiment in which the master sends each slave a rendering time message that includes a given master "rendering time" value together with a corresponding master "device time" value. *Id*., Abstract, 2:38-40, 4:24-28, 7:59-8:3, FIG. 9. Upon receiving this message, a slave first converts the master "device time" value into the slave's device time domain using the determined differential between the master and slave devices' respective device times. *Id*., 3:49-52, 4:32-36, 8:6-11.

In turn, the '252 Patent discloses that a slave device may calculate the difference between the master's rendering time and the slave's rendering time using one of the following approaches:

1. After converting the received master device time value into the slave's time domain, the slave device identifies the value of its slave rendering time at the master's converted device time value and then calculates a difference between the received master rendering time value and the identified slave rendering time value;

2. The slave device identifies the slave device time value at which the slave rendering time had the same value as the received master rendering time

value and then calculates a difference between the master's converted device time value and the identified slave device time value; or

3. After converting the received master device time value into the slave's time domain, the slave device (1) subtracts the received master rendering time value from the master's converted device time value to determine a "master start time" represented in the slave's time domain, (2) subtracts the current slave rendering time from the slave's current device time value to determine a "slave start time," and (3) calculates a difference between the master start time and the slave start time.

Id., 2:46-52, 8:10-23, FIG. 10; *see also* 2:52-65 (disclosing an alternate embodiment where the slave device determines the difference between the master and slave rendering times by evaluating master and slave device times corresponding to the same "default rendering time").

After each slave has determined whether there is a difference between the master's rendering time and the slave's rendering time using the two-phase process discussed above, each slave then "adjusts the rendering of its content to compensate for the difference between the master rendering time and the slave rendering time." *Id*., 2:43-46; *see also* Abstract, 4:38-49. For example, the '252 Patent discloses that a slave device can adjust the rendering of its content by

skipping ahead in the content to "speed up" rendering or by repeating certain content to "slow down" rendering, among other possibilities. *Id*. at 4:38-49.

In line with the '252 Patent's disclosure, the Challenged Claims are all directed to methods for synchronizing the rendering of content among rendering devices. Ex.1009, ¶63. The two independent claims of the '252 Patent reproduced below:

> **1**. A method, comprising:
>
> a master rendering device rendering a first content stream; and
>
> sending, from the master rendering device to a first one of a plurality of slave devices, a plurality of master rendering times indicative of statuses of the rendering the first content stream at the master rendering device at different times;
>
> wherein the first slave device is configured to smooth a rendering time differential that exists between the master rendering device and the first slave device in order to render a second content stream at the first slave device synchronously with the rendering of the first content stream at the master rendering device, wherein smoothing the rendering time differential includes calculations using the plurality of master rendering times.

> **11**. A method, comprising:
> receiving, at a slave device, a particular content stream;
> receiving, at the slave device from a master rendering device, a plurality of master rendering times indicative of status of rendering a different content stream at the master rendering device;
> the slave device determining a smoothed rendering time differential that exists between the master rendering device and the slave device, wherein the determining is based on calculations using the plurality of master rendering times and a plurality of slave rendering times corresponding to rendering the particular content stream at the slave device; and
> based on the smoothed rendering time differential, the slave device rendering the particular content stream synchronously with the master rendering device rendering the different content stream.

Id., Claims 1, 11.

A more detailed discussion of each claim limitation of each Challenged Claim is set forth below.[1]

---

[1] Any statement that elements from different claims are "similar" is made solely in the context of the issues presented in this Petition, and shall not be taken as an admission that these elements should be assigned the same claim construction or should otherwise be treated as having the exact same scope. Petitioner expressly reserves the right to later argue that elements described herein as "similar" still have

VI. CLAIM CONSTRUCTION

Pursuant to 37 C.F.R. §42.104(b)(3), the following sub-sections identify the specific claim terms of the Challenged Claims that should be construed in order to resolve the challenges herein along with Petition's proposed constructions for the identified claim terms.

A. "device time"

The '252 Patent states that a rendering device's "device time" is "the time as indicated by a designated clock (e.g., system clock) of the rendering device." Ex.1001, 2:20-21. Consistent with this disclosure, Petitioner proposes that the term "device time" be construed here as "a time indicated by any clock of a given rendering device."

B. "rendering time"

The '252 Patent states that a rendering device's "rendering time" is "the time represented by the amount of content that has been rendered by that rendering device." *Id*., 2:22-23. For example, if a rendering device has rendered 15 seconds-worth of a given content stream, the rendering device's "rendering time" would be 15 seconds. *Id*., 2:23-26. Consistent with this disclosure, Petitioner proposes that

---

meaningful differences that have an impact on other issues, such as infringement or § 112 invalidity.

the term "rendering time" be construed here as "a time measure of the amount of content that has already been rendered by a given rendering device."

C. Sending/receiving "a plurality of master rendering times"

Each Challenged Claim includes a claim element directed to sending or receiving "a plurality of master rendering times." For instance, Challenged Claims 1-3 and 8 recite "sending, from the master rendering device to a first one of a plurality of slave devices, a plurality of master rendering times indicative of statuses of the rendering the first content stream at the master rendering device at different times." *Id*., Claim 1. Likewise, Challenged Claims 8 and 11 recite "receiving, at the slave device from a master rendering device, a plurality of master rendering times indicative of status of rendering a different content stream at the master rendering device." *Id*., Claim 11.

As noted above, the '252 Patent states that a rendering device's "rendering time" is "the time represented by the amount of content that has been rendered by that rendering device." *Id*., 2:22-23. Consistent with this disclosure, it is clear that the foregoing claim elements cover the sending or receiving of a plurality of time measures of the amount of content from a given content stream that has already been rendered by the master rendering device.

However, in the Litigation, Patent Owner has taken the position that the foregoing claim elements also cover the sending or receiving of any "timestamp"

related to playback. Ex.1006, 13, 59. While Petitioner disagrees that this interpretation is correct under *Phillips*, the claims are to be given their broadest reasonable construction here, which should be broad enough to cover Patent Owner's interpretation in the Litigation. Thus, Petitioner proposes that these claim elements be construed here to cover the sending and receiving of both (1) time measures of the amount of content from a given content stream that has already been rendered by the master rendering device and also (2) timestamps related to playback.

D. "smooth a rendering time differential . . ." / "determining a smoothed rendering time differential . . ."

Each Challenged Claim includes claim elements directed to a "rendering time differential" that is "smoothed." For instance, Challenged Claims 1-3 and 8 recite "wherein the first slave device is configured to smooth a rendering time differential that exists between the master rendering device and the first slave device in order to render a second content stream at the first slave device synchronously with the rendering of the first content stream at the master rendering device, wherein smoothing the rendering time differential includes calculations using the plurality of master rendering times." *Id*., Claim 1. Likewise, Challenged Claims 8 and 11 recite "the slave device determining a smoothed rendering time differential that exists between the master rendering device and the slave device, wherein the determining is based on calculations using the plurality of master

rendering times and a plurality of slave rendering times corresponding to rendering the particular content stream at the slave device." *Id*., Claim 11.

In the context of the '252 Patent, the terms "smooth," "smoothed," and "smoothing" generally refer to the concept of using some function to smooth two or more observed values for a given data variable. Ex.1001, 7:16-27; *see also* Ex.1017; Ex.1018. Such a "smoothing" function may take various forms, common examples of which include functions for averaging or filtering a set of two or more observed values. Ex.1001, 7:16-27; *see also* Ex.1017; Ex.1018. Petitioner proposes that the terms "smooth," "smoothed," and "smoothing" be interpreted in this manner for purposes of the present Petition.

The foregoing claim elements specify that the "smoothing" is applied to the "***rendering time*** differential that exists between the master rendering device and the slave device" and involves "calculations using the plurality of ***master rendering times***" received from the master rendering device. Applying the meaning of the term "rendering time" to these claim elements, it is clear that these claim elements cover a scenario where "smoothing" is applied to a time differential calculated between the amount of content that has already been rendered by the master device (i.e., the master rendering time) and the amount of content that has already been rendered by the slave device (i.e., the slave rendering time).

However, in the Litigation, Patent Owner has taken the position that these claim elements also cover a scenario where "smoothing" is applied to a differential calculated between respective ***device times*** (i.e., clock times) of the master rendering device and slave rendering device. Ex.1006, pp.22, 67-68. While Petitioner disagrees that this interpretation is correct under *Phillips*, the claims are to be given their broadest reasonable construction here, which should be broad enough to cover Patent Owner's interpretation in the Litigation. Thus, Petitioner proposes that these claim elements be construed here to cover any scenario where "smoothing" is applied to a differential between a time measure of the master rendering device and a corresponding time measure of the slave rendering device, where the time measure could either be device time or rendering time.

Consistent with the foregoing, Petitioner's proposed "broadest reasonable constructions" for these claim elements are shown below:

Claims 1-3, 8

Claim Elements: [1.3] wherein the first slave device is configured to smooth a rendering time differential that exists between the master rendering device and the first slave device in order to render a second content stream at the first slave device synchronously with the rendering of the first content stream at the master rendering device, wherein smoothing the rendering time differential includes calculations using the plurality of master rendering times.

Proposed Construction: wherein the first slave device is configured to apply a function to smooth two or more calculated values for a differential between a time measure of the master rendering device and a corresponding time measure of the first slave device and then use the smoothed differential to render a second content stream at the first slave device synchronously with the rendering of the first content stream at the master rendering device.

Claims 11, 17

Claim Elements: [11.3] the slave device determining a smoothed rendering time differential that exists between the master rendering device and the slave device, wherein the determining is based on calculations using the plurality of master rendering times and a plurality of slave rendering times corresponding to rendering the particular content stream at the slave device.

Proposed Construction: the slave device applying a function to smooth two or more calculated values for a differential between a time measure of the master rendering device and a corresponding time measure of the slave device.

VII. OVERVIEW OF CHALLENGES[2]

Challenge #1: Petitioner asserts that Challenged Claims 1-3, 8, 11, and 17 are rendered obvious under 35 U.S.C. §103(a) by U.S. Patent No. 7,269,338 to Janevski ("Janevski"; Ex.1007), either alone or in combination with the paper cited in Janveski entitled "Fault-Tolerant Clock Synchronization for Distributed Systems with High Message Delay Variation" by Azevedo et al. ("Azevedo"; Ex.1010).

Janevski was filed on December 11, 2001 and issued on September 11, 2007. Thus, because it is a patent granted on a United States patent application with a filing date that precedes the earliest possible effective filing date of the '252 Patent, Janevski qualifies as prior art under §102(e).

Azevedo is a printed publication that was published no later than 1995. Thus, because Berthaud's publication date precedes the '252 Patent's earliest possible effective filing date by more than one year, Berthaud qualifies as prior art under both §102(a) and §102(b).

---

[2] A PHOSITA would have the equivalent of a four-year degree from an accredited institution in computer science, computer engineering, electrical engineering, or the equivalent, and approximately 2-4 years of professional experience in the fields of networked systems and networked-based applications, or an equivalent level of skill and knowledge.

Challenge #2: Petitioner asserts that Challenged Claims 1-3, 8, 11, and 17 are obvious under 35 U.S.C. §103(a) in light of Janevski as combined with the publication entitled "Network Time Protocol (Version 3) Specification, Implementation and Analysis" by David L. Mills ("Mills"; Ex.1011), which was published by no later than March 1992. Because Mills's publication date precedes the '252 Patent's earliest possible effective filing date by more than one year, Mills qualifies as prior art under both §102(a) and §102(b).

Challenge #3: Petitioner asserts that Challenged Claims 1-3, 8, 11, and 17 are obvious under 35 U.S.C. §103(a) in light of Janevski as combined with a paper entitled "Time Synchronization Over Networks Using Convex Closures" by Jean-Marc Berthaud ("Berthaud"; Ex.1012), which was published by no later than April 2000. Because Berthaud's publication date precedes the '252 Patent's earliest possible effective filing date by more than one year, Berthaud qualifies as prior art under both §102(a) and §102(b).

Challenge #4: Petitioner asserts that Challenged Claims 1-3, 8, 11, and 17 are obvious under 35 U.S.C. §103(a) in light of Janevski as combined with U.S. Patent No. 6,278,710 to Eidson ("Eidson"; Ex.1013), which was filed on September 1998 and issued on August 21, 2001. Because Eidson was filed and granted before the '252 Patent's earliest possible effective filing date, Eidson qualifies as prior art under both §102(a) and §102(e).

Challenge #5: Petitioner asserts that Challenged Claims 1-3, 8, 11, and 17 are obvious under 35 U.S.C. §103(a) in light of Janevski as combined with U.S. Patent No. 5,642,171 to Baumgartner ("Baumgartner"; Ex.1014), which was filed on June 8, 1994 and issued on June 24, 1997. Because Eidson was filed and also granted more than one year before the '252 Patent's earliest possible effective filing date, Eidson qualifies as prior art under both §102(a), §102(b), and §102(e).

VIII. OVERVIEW OF JANEVSKI

As with the '252 Patent, Janevski is directed to "techniques for synchronizing playback of two or more digital streams based on renderable content of those streams." Ex.1007, 1:8-11. Janevski describes its synchronization techniques in the context of a "synchronized viewing system" in which the rendering devices take the form of personal video recorders (PVRs). *Id*., 5:3-5, 6:4-7:50, FIG. 1. In general, a PVR is a video recording device that may be programmed to automatically find and record certain video content (such as a user's favorite television program) and then render the recorded content on a television so that it can be watched by a user. *Id*., 1:13-20, 6:35-39.

One embodiment of the Janevski system is illustrated in FIG. 1, which is reproduced below:

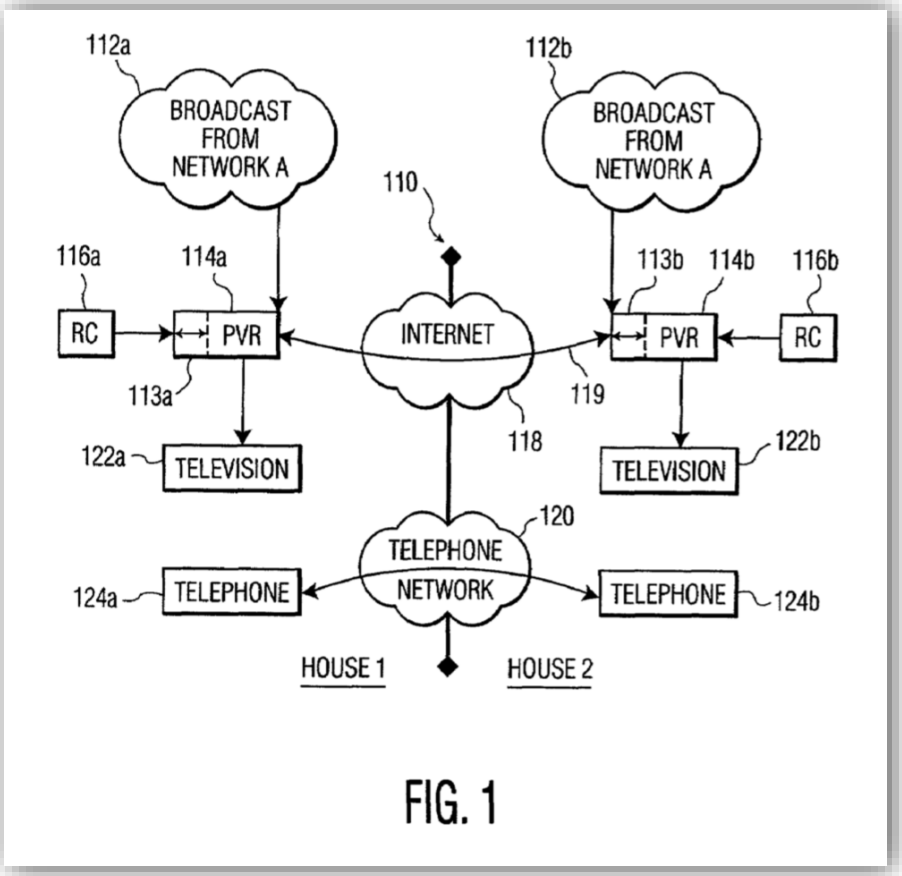

FIG. 1

Id., FIG. 1. As shown in FIG. 1, respective broadcasts 112a, 112b of video content from a network may be sent to a first PVR 114a and a second PVR 114b that are interconnected via the Internet 118. *Id*., FIG. 1, 6:5-39. According to Janevski, these broadcasts may come from various different service providers (e.g., RCN, Time Warner, etc.), and may be distributed using "any communication means known to one having ordinary skill in the art, such as cable, digital cable, satellite, antenna, over the Internet or combinations thereof." *Id*., 3:13-16, 3:27-30, 6:6-10. Further, according to Janevski, the PVRs in the disclosed system may receive content from

other types sources as well, including Internet sources, DVD players, and/or VHS players. *Id*., 1:13-17, 16:6-16.

As disclosed in Janevski, each PVR has a "video timer" that provides a respective "time count" for the PVR. *Id*., FIG. 2, 8:39-10:3, 11:52-12:4, 12:59-66, 15:17. Additionally, when PVRs are rendering video content, each PVR keeps track of the amount of a given video program that has been rendered by the PVR in terms of "the time or frame into the program." *Id*., 1:64-2:5.

When a "synchronized viewing session" is initiated in Janevski, the PVR that started the session is designated as the "initiator" PVR (the master) and the other PVRs participating in the session are designated as "participant" PVRs (i.e., slaves). *Id*., Abstract, 6:16-22. For example, in FIG. 1, PVR 114a is the "initiator" and PVR 114b is a "participant." *Id*. The "initiator" role can later be "handed off" to any PVR that performs a control function for the session. *Id*.

Once the session is initiated, each "participant" PVR periodically determines whether there is any misalignment between the "initiator" PVR's rendering of video content and the "participant" PVR's rendering of video content. *Id*., Abstract, 7:36-50, 10:36-60, 12:59-13:29, 15:32-33. As in the '252 Patent, Janevski discloses a two-phase process for making this determination.

In Janevski's first phase, a respective differential is determined between the "initiator" PVR's time count and each "participant" PVR's time count using a

"time synchronization" mechanism. *Id*., Abstract, 8:39-10:3, 11:43-12:4. Janevski discloses that this "time synchronization" between "initiator" and "participant" PVRs "can be implemented in many different known ways," and that the disclosed techniques are "not limited to any particular time synchronization method." *Id*., 8:53-64, 13:21-22. For instance, Janevski discloses that the "time synchronization" between "initiator" and "participant" PVRs may be carried out using approaches where "[d]istributed processors (nodes) in a network can broadcast their respective clock values periodically to maintain synchronization" and/or where "[s]ynchronization messages [are] relayed between source and destination processors." *Id*., 8:53-64. Janevski also cites to two papers that disclose "time synchronization" techniques, including the Azevedo paper. *Id*.

Janevski then discloses one example of a "time synchronization" mechanism for determining a "time count" differential between "initiator" the "participant" PVRs, which involves an exchange of "synchronization messages." *Id*., 8:65-10:20, 11:52-12:4. This example process is described with reference to FIGs. 4-5, portions of which are reproduced below:

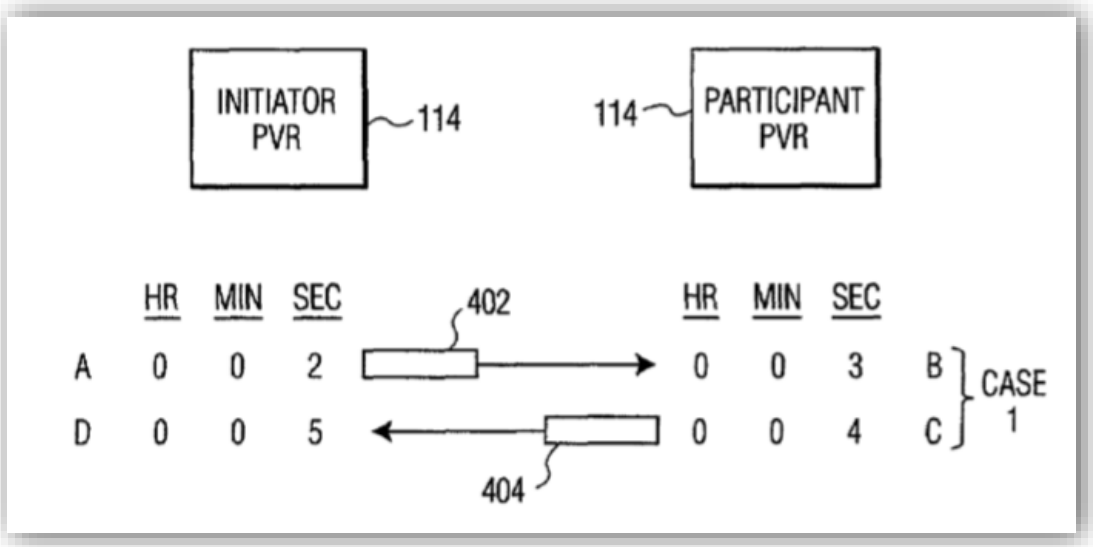

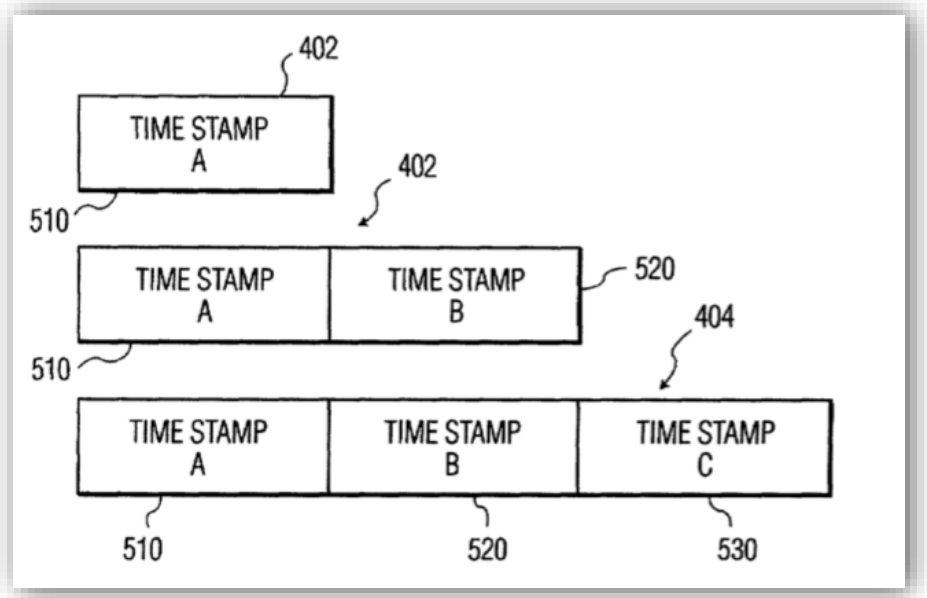

Id., FIGs. 4-5. As shown in FIGs. 4-5 and described in the corresponding text, this process may generally include the following steps:

1. The "initiator" PVR sends the "participant" PVR an originating message 402 that includes the "initiator" PVR's time count when the originating message 402 is sent, which is referred to as "time A";

2. The “participant” PVR records its time count when it receives the originating message 402, which is referred to as “time B”;
3. The “participant” PVR sends the “initiator” PVR a reply message 404 that includes the “participant” PVR’s time count when the reply message 404 is sent, which is referred to as “time C”;
4. The “initiator” PVR records its time count when it receives the reply message 404, which is referred to as “time D”; and
5. The differential (which Janevski calls “time misregistration” or “TM” for short) between the PVRs’ respective time counts may then be calculated using the following equation:

$$TM = \frac{1}{2}[(A+D)-(C+B)]$$

Id., 8:65-10:20, 11:52-12:4.

When comparing the foregoing to the process disclosed in the ‘252 Patent for determining a differential between two devices’ respective device times, it is apparent that the two processes are nearly identical. Ex.1009, ¶¶85-90.

In Janevski, the “initiator” PVR engages in an exchange such as this with each “participant” PVR in order to calculate a respective “time misregistration” between the “initiator” PVR and each “participant” PVR, which is then used during the second phase of Janevski’s process. Ex.1007, 8:39-9:4, 12:59-66.

Turning to Janevski's second phase, the "initiator" PVR sends each "participant" PVR a "status message" that includes the calculated "time misregistration" for the "participant" PVR, an indication of the "initiator" PVR's "time into the program," and identifying information for a "query frame." *Id*., Abstract, 7:36-50, 10:19-35, 12:5-36. Preferably, the identified "query frame" is "a frame that the initiator has just played or has recently played," so that the identifying information "represent[s] where the ['initiator' PVR's] playback is in the content at a particular time which is current." *Id*., 12:5-11.

In Janevski's primary embodiment, the identifying information for the "query frame" comprises a "query signature" and a corresponding "query time stamp" for the query frame, although Janevski discloses that the identifying information may take other forms as well. *Id*., 10:19-35, 12:5-36, 16:58-67. Further, in Janevski's primary embodiment, the "initiator" PVR may adjust the "query time stamp" by subtracting out the calculated "time misregistration" between the "initiator" and "participant" PVRs before including it in the "status message." *Id*., 12:18-29.

After receiving the status message from the "initiator" PVR, each "participant" PVR may then use the calculated "time misregistration" between the "initiator" and "participant" PVRs, the indicator of the "initiator" PVR's "time into the program," and the identifying information for the "initiator" PVR's query

frame to determine whether there is any misalignment in the rendering between the "initiator" and "participant" PVRs. *Id*., 10:36-60, 12:59-14:63.

Specifically, Janevski discloses that a "participant" PVR may first adjust its "time count" using the "time misregistration" between the "initiator" and "participant" PVRs in order to "time synchroniz[e]" its "time count" with the "initiator" PVR's "time count." *Id*., 12:59-13:21. For example, the "participant" PVR may "compensate[] for time misregistration, by advancing the time count of its video timer 212 by the magnitude of the time misregistration, if the time misregistration is positive, or by rolling back the time count of its video timer 212 by the magnitude of the time misregistration, if the time misregistration is negative." *Id*., 12:59-66; *see also* 13:8-21 (disclosing an "alternative embodiment" where the "initiator" and "participant" PVRs "share time compensation duties").

After adjusting its "time count," the "participant" PVR may use the identifying information for the "initiator" PVR's "query frame" to determine whether there is any differential between the video frames that have been rendered by the "initiator" PVR and the video frames that have been rendered by the "participant" PVR, which may be represented either in terms of a number of frames or in terms of "video time." *Id*., 10:36-60, 13:24-14:63. Janevski calls this differential "frame misregistration." differential *Id*.

Upon determining that there is "frame misregistration" between the "initiator" and "participant" PVRs, the "participant" PVR compensates for this "frame misregistration" by slowing down, speeding up, rewinding, fast-forwarding, and/or halting its rendering of video content. *Id*., Abstract, 3:52-57, 10:60-62, 13:24-30, 14:35-63. In this way, the "participant" PVR is able to "fine tune" the synchronization of the "participant" PVR's rendering with the "initiator" PVR's rendering. *Id*., 7:47-50, 9:10-14, 10:33-35.

Janevski additionally discloses a process for a new "participant" PVR to join an ongoing "synchronized viewing session." *Id*., 10:63-11:29. According to this process, the new "participant" PVR first notifies the "initiator" PVR of a desire to join the session. *Id*., 11:12-14. In response, the "initiator" PVR sends the new "participant" PVR an "originating synchronization message 402" that includes a "time stamp A" indicating the "initiator" PVR's current "time count." *Id*., 11:14-17. In turn, the new "participant" PVR "advances the time count of its video timer 212 so that the value of the time count matches time stamp A contained in the message 402." *Id*., 11:17-20. Correspondingly, the new "participant" PVR fast forwards its copy of the video content to a point that "corresponds to the value of the advanced time count, so that the new participant's playback has caught up content-wise with the playback of the initiator." *Id*., 11:20-24.

Once the new "participant" PVR has completed these preliminary steps, the new "participant" PVR may then maintain synchronization with the "initiator" PVR using the two-phase process discussed above. *Id*., 11:24-29.

According to Janevski, the sequence of the foregoing steps can also be modified. For instance, Janevski discloses that the "initiator" PVR may send the "query time stamp" separately from the "time misregistration," and that "time misregistration and frame misregistration can be calculated and compensated for asynchronously." *Id*., 15:48-63.

IX. DETAILED ANALYSIS OF CHALLENGE#1

Pursuant to 37 C.F.R. §42.104(b)(4)-(5), the following sub-sections provide a detailed analysis of why Challenged Claims 1-3, 8, 11, and 17 are rendered obvious under 35 U.S.C. §103(a) by Janevski, either alone or in combination with the Azevedo paper cited in Janevski. Challenge #1 is further supported by the Declaration of Roman Chertov. Ex.1009, ¶¶101-152.

Petitioner has organized the sub-sections below such that the analysis of independent claim 1 and its dependent claims is presented first, followed by the analysis of independent claim 11 and its dependent claims. To avoid redundancy, Petitioner has also included cross-references between similar claim limitations where appropriate.

A. Independent Claim 1

As established below, Janevski either alone or in combination with the Azevedo paper cited in Janevski discloses or suggests every element of claim 1, and thus renders claim 1 obvious under 35 U.S.C. § 103(a). Ex.1009, ¶¶102-27.

[1.0] A method, comprising:

To the extent it is limiting, Janevski discloses preamble 1.0. Ex.1009, ¶103. For instance, Janevski discloses a method for synchronizing the playback of video content at rendering devices such as the PVRs. Ex.1007, Abstract, FIG. 1, 1:8-11, 5:3-32, 6:4-39.

[1.1] a master rendering device rendering a first content stream; and

Janevski discloses element 1.1. Ex.1009, ¶¶104-105. For instance, Janevski states that "[t]he present invention relates generally to digital image playback, and more particularly to techniques for synchronizing playback of two or more digital streams based on renderable content of those streams." Ex.1007, 1:8-11. Janevski describes its synchronization techniques in the context of "synchronized PVR viewing system" in which the personal video record (PVR) that initiates a "synchronized viewing session" is designated as an "initiator" PVR and the one or more other PVRs participating in the "synchronized viewing session" are designated as "participant" PVRs. *Id*., FIG. 1, 6:4-25.

In Janevski's "synchronized PVR viewing system" system, the "initiator" and "participant" PVRs' receive respective broadcasts of video content that take the form of "digital bit streams." *Id*., FIG. 1, 6:4-25, 16:44-52. During the "synchronized viewing session," the "initiator" and "participant" PVRs then play back their respective "digital bit streams" in a "synchronized" manner. *Id*., Abstract, 1:8-11, 5:3-32, 15:64-16:5, 16:35-37. Thus, the "initiator" PVR playing back a "digital bit stream" amounts to the claimed functionality of "a master rendering device rendering a first content stream."

[1.2] sending, from the master rendering device to a first one of a plurality of slave devices, a plurality of master rendering times indicative of statuses of the rendering the first content stream at the master rendering device at different times;

Janevski discloses element 1.2. Ex.1009, ¶¶106-107. For instance, Janevski discloses that the "initiator" PVR (the "master rendering device") sends each "participator" PVR (the "plurality of slave devices") periodic "status messages" that each include an indication of the "initiator" PVR's "time into the [video] program," which is a time measure of the amount of content from the video program that has already been rendered by the "initiator" PVR. Ex.1007, Abstract, 7:36-50. Thus, this disclosure amounts to the claimed functionality of "sending, from the master rendering device to a first one of a plurality of slave devices, a plurality of master rendering times indicative of statuses of the rendering the first content stream at the master rendering device at different times." Ex.1009, ¶106.

Further, Janevski discloses that the "initiator" PVR's periodic "status messages" to a "participant" PVR include "query time stamps" for recently-played video frames. Ex.1007, Abstract, 7:36-50, 10:19-35, 12:5-36. Thus, under the "broadest reasonable construction" of element 1.2, this disclosure also amounts to the claimed functionality of "sending, from the master rendering device to a first one of a plurality of slave devices, a plurality of master rendering times indicative of statuses of the rendering the first content stream at the master rendering device at different times." Ex.1009, ¶107.

[1.3] wherein the first slave device is configured to smooth a rendering time differential that exists between the master rendering device and the first slave device in order to render a second content stream at the first slave device synchronously with the rendering of the first content stream at the master rendering device, wherein smoothing the rendering time differential includes calculations using the plurality of master rendering times.

As noted above, the "broadest reasonable construction" of element 1.3 is that "the first slave device is configured to apply a function to smooth out two or more calculated values for a differential between a time measure of a master rendering device and a corresponding time measure of the first slave device and then use the smoothed differential to render a second content stream at the first slave device synchronously with the rendering of the first content stream at the master rendering device." Janevski discloses every aspect of this claim element other than the "smoothing" function, and modifying Janevski to incorporate "smoothing" of the calculated "time misregistration" and/or "frame misregistration" values between

the “initiator” and “participant” PVRs would have been obvious to a PHOSITA. Ex.1009, ¶¶108-27.

For instance, Janevski discloses that each “participant” PVR periodically determines whether there is any misalignment between the “initiator” PVR’s rendering of video content and the “participant” PVR’s rendering of video content using a two-phase process that involves a determination of two different types of time differentials between the PVRs. Ex.1007, Abstract, 7:36-50, 10:36-60, 12:59-13:29, 15:32-33.

During the first phase of Janevski’s disclosed process, the “initiator” PVR engages in a “time synchronization” mechanism with a “participant” PVR in order to determine a differential between the “initiator” PVR’s “time count” and the “participant” PVR’s “time count,” *Id*., Abstract, 8:39-10:3, 11:43-12:4. Janevski calls this first differential “time misregistration.” *Id*.

Then during the second phase of Janevski’s disclosed process, the “initiator” PVR sends a “status message” to the “participant” PVR that includes the calculated “time misregistration” between the “initiator” and “participant” PVRs, an indication of the “initiator” PVR’s “time into the [video] program,” and identifying information for a recently-rendered video frame that includes both a “query signature” and a “query time stamp.” *Id*., Abstract, 7:36-50, 10:19-35, 12:5-36.

In response to receiving this "status message," the "participant" PVR begins by adjusting its "time count" to compensate for the "time misregistration" between the "initiator" and "participant" PVRs. *Id*., 12:59-13:21. In turn, the "participant" PVR uses its adjusted "time count" along with the other information included in the "status message" to calculate a differential between the video frames that have been rendered by the "initiator" PVR and the video frames that have been rendered by the "participant" PVR, which may be represented in terms of "video time." *Id*., 10:36-60, 13:24-14:63. Janevski calls this second differential "frame misregistration." *Id*.

Lastly, the "participant" PVR adjusts its rendering of video content to compensate for this "frame misregistration," such by slowing down, speeding up, rewinding, fast-forwarding, and/or halting its rendering of the video content. *Id*., Abstract, 3:52-57, 10:60-62, 13:24-30, 14:35-63.

As further disclosed in Janevski, the foregoing two-phase process is "preferably performed periodically to keep the presentation [of video content] synchronized" between the "initiator" and "participant" PVRs. *Id*., 15:32-33; *see also id*. at Abstract (stating that the "initiator" PVR directs each "participant" PVR to "synchronize their playbacks" to that of the "initiator" PVR "at session startup, upon execution of each control function, and periodically"), 7:36-39 (stating that

"[t]o ensure that the PVRs 114a,b participating in a session remain synchronous, a status message is sent out periodically by the 'initiator' [PVR]").

The foregoing establishes that Janevski's synchronization method involves a calculation of two different types of time differentials between the "initiator" PVR and the "participating" PVR: (1) a "time count" differential between the "time count" of the "initiator" PVR and the "time count" of the "participant" PVR as part of the "time synchronization" phase of the process, and (2) a "frame" differential (represented in "video time") between the video frames that have been rendered by the "initiator" PVR and the video frames that have been rendered by the "participant" PVR as part of the "frame synchronization" phase of the process. Ex.1009, ¶115.

Further, the foregoing establishes that both of the time differentials in Janevski are calculated "periodically" to sufficiently maintain synchronization between the "initiator" and "participant" PVRs. This means that during a synchronized viewing session, there is a series of values calculated for both the "time count" differential and the "frame" differential between the "initiator" and "participant" PVRs. Ex.1009, ¶116.

Further yet, the foregoing establishes that the calculated values for both the "time count" differential and the "frame" differential are used by the "participant"

PVR to render video content synchronously with the "initiator" PVR's rendering of video content. Ex.1009, ¶117.

Thus, under the "broadest reasonable construction" of element 1.3, Janevski's disclosure of the "time count" differential ***and*** Janevski's disclosure of the "frame" differential each separately amounts to "two or more calculated values for a differential between a time measure of a master rendering device and a corresponding time measure of the first slave device" that are "used to render a second content stream at the first slave device synchronously with the rendering of the first content stream at the master rendering device." Ex.1009, ¶118.

The only remaining aspect of element 1.3 not expressly disclosed by Janevski is the "smoothing" function. In the context of Janevski, this aspect of element 1.3 would require the "participant" PVR to apply a function to smooth the periodically-calculated values for either the "time count" differential or the "frame" differential. Ex.1009, ¶119. Such a modification is an insignificant advance over Janevski. *Id*. *See, e.g., Odom v. Microsoft Corp*., 429 F. App'x 967, 973 (Fed. Cir. 2011) (finding a patent obvious under § 103 based on a single prior art reference because the only difference between the two was an "insignificant advance" over the prior art reference); *see also, e.g., KSR Int'l Co. v. Teleflex Inc.*, 550 U.S. 398, 417 (2007) ("If a person of ordinary skill can implement a predictable variation [of a prior art work], § 103 likely bars its patentability.").

Indeed, in line with the discussion above, a "participant" PVR in Janevski could be modified to practice the "smoothing" aspect of element 1.3 using any of a variety of conventional techniques. Ex.1009, ¶120. For example, if a "participant" PVR in Janevski was simply configured to calculate an average of the last two or more calculated values for either the "time count" differential or the "frame" differential before using such values to render content, then this functionality would satisfy element 1.3. *Id.* Or as another example, if a "participant" PVR in Janevski were simply configured to apply a filter to the calculated values for either the "time count" differential or the "frame" differential before using such values to render content, then this functionality would satisfy element 1.3 as well. *Id.*

These conventional techniques for smoothing the observed values for a given data variable were well within the knowledge of a PHOSITA in 2001 when the '252 Patent's provisional application was filed. Ex.1009, ¶121. In fact, the use of data smoothing techniques such as averaging or filtering for purposes of reducing the volatility in a set of measured values is a well-established field that been the subject of numerous textbooks and articles dating back to at least the 1970s. *Id*. Petitioner has submitted a sampling of the textbooks and papers that evidence a PHOSITA's knowledge of data smoothing herewith. Ex.1015; Ex.1016. These materials demonstrate that the types of conventional "smoothing"

techniques covered by the Challenged Claims are nothing more than predictable mathematical techniques that yield predictable results. Ex.1009, ¶121.

Likewise, Janevski's own disclosure shows that a PHOSITA was already aware of benefits of using data smoothing when performing clock synchronization between network nodes. Ex.1009, ¶122. For instance, Janevski discloses that the "time synchronization" between "initiator" and "participant" PVRs "can be implemented in many different known ways," and one of the examples that Janevski cites for these "known ways" are the techniques disclosed in the Azevedo paper published no later than 1995. Ex.1007, 8:53-59. In that paper, there are three mechanisms disclosed for achieving "fault-tolerant clock synchronization" between nodes in a network based on a "clock correction term." Ex.1010, pp.1-3. And in one of these mechanisms, a "weighted" average of the last two measurements of the "clock correction term" is computed in order to "smooth" that "clock correction term," such that the volatility in the "clock correction term" measurements is "attenuated." *Id*., p.4. Notably, weighted averaging is the same technique for "smoothing" disclosed in the '252 Patent. Ex.1001, 7:17-26.

Thus, Janevski's citation to the Azevedo paper provides further support for the conclusion that modifying a "participant" PVR such that was configured to calculate a weighted average of the periodically-calculated values for either the

"time count" differential or the "frame" differential would have been nothing more than a trivial change for a PHOSITA. Ex.1009, ¶122.

Moreover, the nature of the problem to be solved, the well-known uses and advantages of data smoothing, and Janevski's own disclosure all demonstrate that a PHOSITA would have been motivated to modify Janevski such that a "participant" PVR was configured to apply a "smoothing" function to the periodically-calculated values for the "time count" differential and/or the "frame" differential disclosed in Janevski. Ex.1009, ¶123.

For instance, the nature of the problem to be solved by the '252 Patent relates to improving the accuracy of synchronizing playback between rendering devices. Ex.1008, p.1 (stating that the "synchronization model . . . adjusts the playout rate of the sample stream to ***try to minimize the error*** between the master and render clocks") (emphasis added), p.3 (stating that the "synchronization model" tries to "minimize the effects of latency on ***synchronization accuracy***) (emphasis added). In this regard, it would have been well known to a PHOSITA in 2001 that applying data smoothing to a periodically-calculated data variable would reduce the volatility of such periodic calculations and thereby improve the overall accuracy of the calculation. Ex.1009, ¶124. Thus, a PHOSITA would have been motivated to apply data smoothing to any periodic calculations that are performed

while attempting to synchronize playback in order to further improve the accuracy of the synchronize playback. *Id.*

Similarly, Janevski repeatedly emphasizes that its goal is to provide ***precise*** synchronization of video content rendering. Ex.1007, Abstract (stating that "the playbacks are content-wise aligned, by rewinding or fast forwarding, to effect overall a ***precisely synchronized*** presentation") (emphasis added), 3:43-57 (noting that "there exist viewing configurations in which 'out-of-synch' effects are significant and interfere with viewing enjoyment" and then stating that the "present invention" is intended to "achieve ***precise synchronization***") (emphasis added), 5:3-5 (stating that "[t]he present invention provides a system that allows two or more people with personal video recorders (PVRs) to ***precisely synchronize*** their time-shifted viewing") (emphasis added). This focus on precise synchronization serves as further evidence that a PHOSITA would have been motivated to incorporate data smoothing into Janevski's teachings to further improve the accuracy of the periodically-calculated "time count" and "frame" differentials that are used by a "participant" PVR to synchronize its rendering with the "initiator" PVR. Ex.1009, ¶125.

For at least these reasons, it would have been obvious to a PHOSITA in 2001 to modify Janevski's teachings such that a "participant" PVR is configured to apply a conventional "smoothing" function such as averaging or filtering to the

periodically-calculated values for the "time count" differential and/or the "frame" differential. *Id.*, ¶126; *see, e.g., Karl Storz Endoscopy-Am., Inc., 7,420,151 B2*, 2017 WL 950769, at *13 (Mar. 8, 2017) (finding that "routine experimentation and use of basic mathematical principles to obtain predictable results" would have led a PHOSITA to modify the prior art by incorporating averaging of signal values); *Ex Parte Peter Hartmann, Ching Tat Lai, & Leon R. Mitoulas*, APPEAL 2012-007518, 2015 WL 581245, at *5 (Feb. 10, 2015) (finding that "[b]ecause the use of averages is a known technique . . .relied upon to analyze data," it would have been obvious to modify the prior art to rely on "average yields of milk rather than percentage yields of milk as known alternative, predictable mathematical techniques for data analysis which yield predictable results").

Thus, Janevski's disclosure in combination with a PHOSITA's knowledge of conventional data smoothing techniques and/or the Azevedo paper cited in Janevski teaches element 1.3. Ex.1009, ¶127.

B. Dependent Claims 2-3 & 8

As established above, Janevski either alone or in combination with the Azevedo paper cited in Janevski discloses or suggests every element of claim 1, and thus renders claim 1 obvious under pre-AIA 35 U.S.C. § 103(a). Further, as established below, Janevski discloses or suggests every additional element recited

in claims 2-3 and 8, which makes claims 2-3 and 8 obvious under 35 U.S.C. § 103(a) as well. Ex.1009, ¶¶128-32.

[2.0] The method of claim 1, wherein one of the plurality of master rendering times includes a master device time at which the master rendering device renders content.

Janevski discloses element 2.0. *Id.*, ¶129. For instance, as discussed above, Janevski discloses that the "initiator" PVR (the "master rendering device") periodically sends each "participator" PVR a "status message" that contains an indication of the "initiator" PVR's "time into the [video] program" as well as a "query time stamp" for "a frame that the initiator has just played or has recently played." Ex.1007, Abstract, 7:36-50, 10:19-35, 12:5-36. This disclosure amounts to the claimed functionality of sending "a master device time at which the master rendering device renders content." Ex.1009, ¶129.

[3.0] The method of claim 1, wherein sending the plurality of master rendering times comprises sending a series of transmissions to the first slave device, each one of the series of transmissions being at a different time.

Janevski discloses element 3.0. Ex.1009, ¶130. For instance, Janevski discloses that the "status messages" containing the indications of the "initiator" PVR's "time into the [video] program" and the "query time stamps" are sent by the "initiator" PVR "periodically" to ensure that the "initiator" and "participant" PVRs "remain synchronous." Ex.1007, 7:36-38; *see also* 15:32-33 (disclosing that "[t]ime and frame synchronization is preferably performed periodically to keep the

presentation synchronized”). This “periodic” transmission of the “status message” from the “initiator” PVR to each “participant” PVR amounts to the claimed functionality of “sending the plurality of master rendering times comprises sending a series of transmissions to the first slave device, each one of the series of transmissions being at a different time.” Ex.1009, ¶130.

[8.0] The method of claim 1, wherein the first content stream is sent from a first source device to the master rendering device and the second content stream is sent to the first slave device from a difference source device.

Janevski discloses element 8.0. Ex.1009, ¶¶131-32. For instance, as discussed above, Janevski discloses that the “initiator” and “participant” PVRs (the “master rendering device” and “slave rendering device”) each receive respective broadcasts of “digital bit streams” that may be sent by “different cable or satellite providers.” Ex.1007, 3:13-16, 6:5-39, 16:44-52. For example, Janevski’s disclosure contemplates an embodiment where one broadcasted “digital bit stream” is sent from RCN to one of the PVRs and another broadcasted “digital bit stream” is sent from Time Warner to another of the PVRs. *Id*. Because these “different cable or satellite providers” amount to different sources, this disclosure amounts to the claim functionality of “the first content stream [being] sent from a first source device to the master rendering device and the second content stream [being] sent to the first slave device from a difference source device.” Ex.1009, ¶131.

Janevski further discloses that broadcasted "digital bit streams" to be rendered by the PVRs in the "synchronized PVR viewing system" may be sent from other types of sources as well, including Internet sources. Ex.1007, 1:13-17, 16:6-16.

C. Independent Claim 11

As established below, Janevski either alone or in combination with the Azevedo paper cited in Janevski discloses or suggests every element of claim 11, and thus renders claim 11 obvious under 35 U.S.C. §103(a). Ex.1009, ¶¶133-49.

[11.0] A method, comprising:

To the extent that the preamble of claim 11 is limiting, Janevski discloses preamble 11.0. Ex.1009, ¶134. For instance, Janevski discloses a method for synchronizing the playback of video content at rendering devices that are nodes of a network, such as the PVRs that are interconnected via an "Internet network." Ex.1007, Abstract, FIG. 1, 1:8-11, 6:4-39, 6:45-51.

[11.1] receiving, at a slave device, a particular content stream;

Janevski discloses claim element 11.1. Ex.1009, ¶¶135-36. For instance, Janevski states that "[t]he present invention relates generally to digital image playback, and more particularly to techniques for synchronizing playback of two or more digital streams based on renderable content of those streams." Ex.1007, 1:8-11. Janevski describes its synchronization techniques in the context of

"synchronized PVR viewing system" in which the PVR that initiates a "synchronized viewing session" is designated as an "initiator" PVR and the one or more other PVRs participating in the "synchronized viewing session" are designated as "participant" PVRs. *Id*., FIG. 1, 6:4-25.

In Janevski's "synchronized PVR viewing system" system, the "initiator" and "participant" PVRs receive respective broadcasts of video content that take the form of "digital bit streams." *Id*., FIG. 1, 6:4-25, 16:44-52. During the "synchronized viewing session," the "initiator" and "participant" PVRs then play back their respective "digital bit streams" in a "synchronized" manner. *Id*., Abstract, 1:8-11, 5:3-32, 15:64-16:5, 16:35-37. Thus, the "participant" PVR receiving a broadcasted "digital bit stream" amounts to the claimed functionality of "receiving, at a slave device, a particular content stream." Ex.1009, ¶136.

[11.2] receiving, at the slave device from a master rendering device, a plurality of master rendering times indicative of status of rendering a different content stream at the master rendering device;

Janevski discloses element 11.2. Ex.1009, ¶¶137-38. For instance, Janevski discloses that each "participator" PVR (which amounts to the claimed "the slave device") receives sends periodic "status messages" from the "initiator" PVR (which amounts to the claimed "master rendering device") that each include an indication of the "initiator" PVR's "time into the [video] program," which is a time measure of the amount of content from the video program that has already been

rendered by the "initiator" PVR. Ex.1007, Abstract, 7:36-50. Thus, this disclosure amounts to the claimed functionality of "receiving, at the slave device from a master rendering device, a plurality of master rendering times indicative of status of rendering a different content stream at the master rendering device." Ex.1009, ¶137.

Further, Janevski discloses that the periodic "status messages" received by each "participant" PVR also include "query time stamps" for video frames that have recently been played at the "initiator" PVR. Ex.1007, Abstract, 7:36-50, 10:19-35, 12:5-36. Thus, under the "broadest reasonable construction" of element 11.2, this disclosure also amounts to the claimed functionality of "receiving, at the slave device from a master rendering device, a plurality of master rendering times indicative of status of rendering a different content stream at the master rendering device." Ex.1009, ¶138.

[11.3] the slave device determining a smoothed rendering time differential that exists between the master rendering device and the slave device, wherein the determining is based on calculations using the plurality of master rendering times and a plurality of slave rendering times corresponding to rendering the particular content stream at the slave device; and

As noted above, the "broadest reasonable construction" of element 11.3 is "the slave device applying a function to smooth out two or more calculated values for a differential between a time measure of a master rendering device and a corresponding time measure of the slave device," which overlaps with aspects of

element 1.3 of claim 1. Thus, Janevski discloses element 11.3 for similar reasons to those discussed above with respect to element 1.3. Ex.1009, ¶¶139-45.

Indeed, as with element 1.3, Janevski discloses every aspect of element 11.3 other than "smoothing," and modifying Janevski to apply a "smoothing" function to the "time count" and/or "frame" differentials between the "initiator" and "participant" PVRs would have been obvious to a PHOSITA based Janevski alone. Ex.1009, ¶140.

For instance, as established above, Janevski's synchronization method involves a calculation of two different types of time differentials between the "initiator" PVR and the "participating" PVR: (1) a "time count" differential between the "time count" of the "initiator" PVR and the "time count" of the "participant" PVR as part of the "time synchronization" phase of the process, and (2) a "frame" differential between the video frames that have been rendered by the "initiator" PVR and the video frames that have been rendered by the "participant" PVR as part of the "frame synchronization" phase of the process.

Further, as established above, both of these time differentials in Janevski are calculated "periodically" to sufficiently maintain synchronization between the "initiator" and "participant" PVRs. This means that during a synchronized viewing session, there is a series of values calculated for both the "time count" differential

and the “frame” differential between the “initiator” and “participant” PVRs. Ex.1009, ¶142.

Thus, under the “broadest reasonable construction” of element 11.3, Janevski’s disclosure of the “time count” differential ***and*** Janevski’s disclosure of the “frame” differential each separately amounts to “two or more calculated values for a differential between a time measure of a master rendering device and a corresponding time measure of the first slave device.” Ex.1009, ¶143.

The only remaining aspect of element 11.3 not expressly disclosed by Janevski is the “smoothing” function, and as established above, it would have been obvious to a PHOSITA in 2001 to modify Janevski’s teachings such that a “participant” PVR is configured to apply a “smoothing” function (e.g., averaging or filtering) to the periodically-calculated values for the “time count” differential and/or the “frame” differential. Ex.1009, ¶144.

Thus, Janevski’s disclosure as combined with a PHOSITA’s knowledge of conventional data smoothing techniques and/or the Azevedo paper teaches element 11.3. Ex.1009, ¶145.

[11.4] based on the smoothed rendering time differential, the slave device rendering the particular content stream synchronously with the master rendering device rendering the different content stream

Element 11.4 overlaps with aspects of element 1.3 of claim 1. Thus, Janevski discloses element 11.4 for similar reasons to those discussed above with respect to element 1.3. Ex.1009, ¶¶146-49.

For instance, as established above, the calculated values for both the "time count" differential and the "frame" differential are used by the "participant" PVR to render video content synchronously with the "initiator" PVR's rendering of video content. This amounts to the claimed functionality of "the slave device rendering the particular content stream synchronously with the master rendering device rendering the different content stream" based on the "time count" differential and the "frame" differential, each of which amounts to a "rendering time differential" under the "broadest reasonable construction." Ex.1009, ¶147.

Further, as established above, it would have been obvious to a PHOSITA in 2001 to modify Janevski's teachings such that a "participant" PVR is configured to "smooth" the periodically-calculated values for the "time count" differential and the "frame" differential on which the "participant" PVR's rendering is based. Ex.1009, ¶148.

Thus, Janevski's disclosure as combined with a PHOSITA's knowledge of conventional data smoothing techniques and/or the Azevedo paper cited in Janevski teaches element 11.4. Ex.1009, ¶149.

D. Dependent Claim 17

As established above, Janevski either alone or in combination with the Azevedo paper cited in Janevski discloses or suggests every element of claim 11, and thus renders claim 11 obvious under 35 U.S.C. §103(a). Further, as established below, Janevski discloses the additional element recited in claim 17, which renders claim 17 obvious under 35 U.S.C. §103(a). Ex.1009, ¶¶150-52.

[17.0] The method of claim, 11 wherein the master rendering device and the slave device are part of a same system.

Janevski discloses claim element 17.0. Ex.1009, ¶151. For instance, as discussed above, Janevski discloses a "synchronized PVR viewing system" that includes both an "initiator" PVR (which amounts to the claimed "master rendering device") and a "participant" PVR (which amounts to the claimed "slave rendering device"). Ex.1007, FIG. 1, 6:4-25. One example of this "system" is illustrated in FIG. 1:

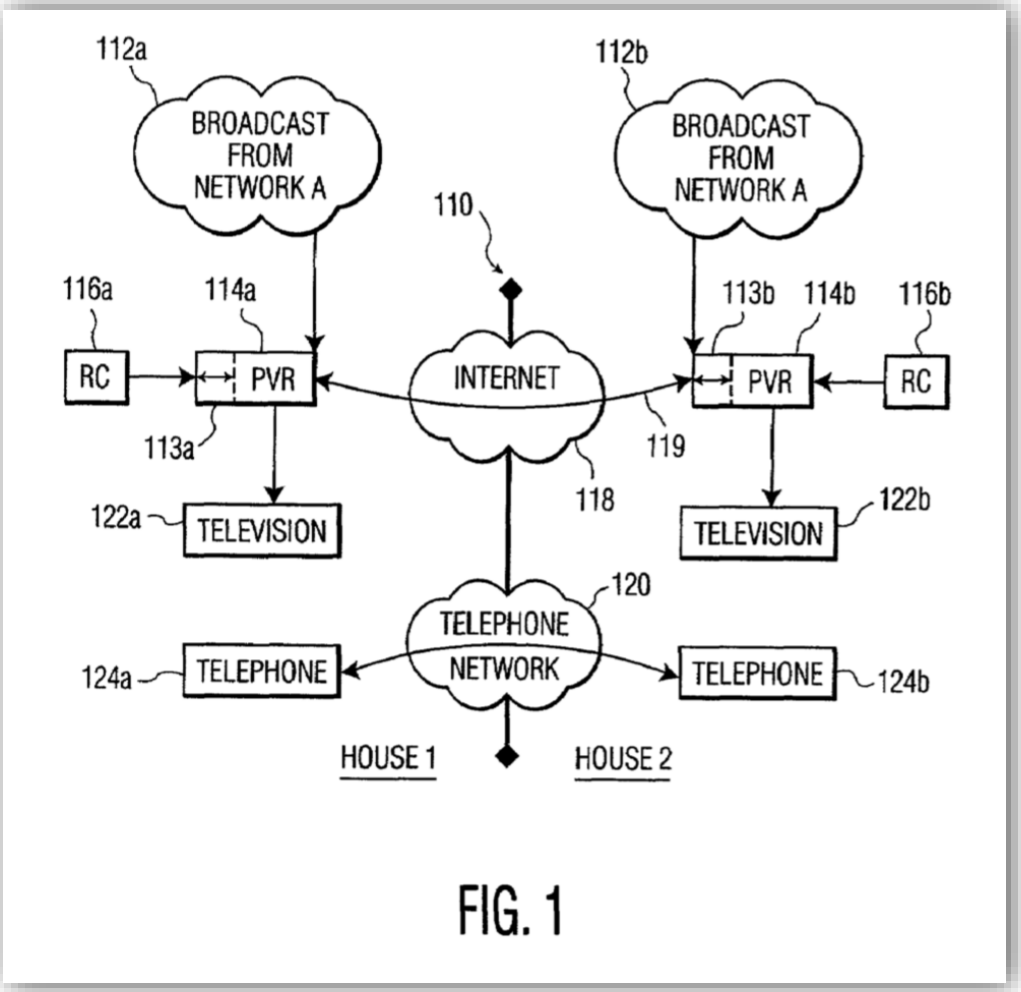

FIG. 1

Id., FIG 1. As shown, there is a "synchronized PVR viewing system 110" that includes an "initiator" PVR 114a and a "participant" PVR 114b. *Id*.

This disclosure satisfies the claimed requirement that "the master rendering device and the slave device are part of a same system." Ex.1009, ¶152.

X. DETAILED ANALYSIS OF CHALLENGES#2-4

As established above, Janevski expressly discloses every element of Challenged Claims 1-3, 8, 11, and 17 other than the "smoothing" aspect of

elements 1.3 and 11.3, which is an insignificant advance over Janevski that would have been obvious to a PHOSITA based on Janevski either alone or in combination with the Azevedo paper cited in Janevski. Ex.1009, ¶153. In addition, Petitioner respectfully submits that Challenged Claims 1-3, 8, 11, and 17 would have been obvious under 35 U.S.C. § 103(a) in light of Janevski as combined with either Mills (Challenge #2), Berthaud (Challenge #3), or Eidson (Challenge #4), each of which disclose "time synchronization" mechanisms that incorporate the use of a "smoothing" function. Ex.1009, ¶¶154-68.

For instance, Janevski discloses that the "initiator" PVR and "participant" PVRs periodically carry out a "time synchronization" mechanism in order to determine the "time count" differential between the "initiator" PVR and the "participant" PVR. Ex.1007, Abstract, 8:39-10:3, 11:43-12:4. As established above, this periodically-calculated "time count" differential amounts to "two or more calculated values for a differential between a time measure of a master rendering device and a corresponding time measure of the first slave device" that are "used to render a second content stream at the first slave device synchronously with the rendering of the first content stream at the master rendering device." Ex.1009, ¶155. Thus, under the "broadest reasonable construction," this disclosure satisfies every aspect of elements 1.3 and 11.3 other than the "smoothing." *Id.*

Moreover, Janevski expressly discloses that the "time synchronization" between "initiator" and "participant" PVRs "can be implemented in many different known ways," and that Janevski's synchronization techniques are "not limited to any particular time synchronization method." Ex.1007, 8:53-64, 13:21-22. Thus, this disclosure provides a clear motivation to combine Janevski with prior art references disclosing existing "time synchronization" mechanisms that apply a "smoothing" function to time offsets calculated between nodes in a distributed network. Ex.1009, ¶156. Mills, Berthaud, and Eidson each include such a disclosure. *Id.*

For instance, Mills is a 1992 publication that describes the "Network Time Protocol" (NTP), which "provides the mechanisms to synchronize time and coordinate time distribution" in networks. Ex.1011, p.1. Mills discloses techniques for determining an offset between clocks of devices communicating over a network. Id., pp.6-7. As part of this disclosure, Mills describes "algorithms useful for deglitching and smoothing clock-offset samples collected on a continuous basis." Id., pp.1, 34-40 (emphasis added). Relatedly, Mills disclose that the "clock offset" of a "local clock" relative to a "peer clock" can be "averaged over long intervals in order to improve the accuracy and stability without bias accumulation." Id., p.36.

Similarly, Berthaud is an April 2000 publication that proposes techniques for improving the precision of time synchronization between clocks of devices in a distributed network system. Ex.1012, p.1. However, before describing its proposed technique, Berthaud first summarizes some "common principles" used by "existing" techniques at the time for achieving time synchronization. Id., pp.1-2.

As part of that summary, Berthaud discloses that "[t]echniques generally applied in networks regularly measure the offsets between clocks of the computers to synchronize," and that the observed time offsets between the clocks are then used to produce an "estimation" of the offset. *Id*. In this respect, Berthaud discloses that "several tools may be used" to determine this "estimation" of the time offset between, such as "mean value, weighted average, linear regression, midpoint functions, etc." – each of which amounts to a "smoothing" function. *Id*.; Ex.1009, ¶159. In turn, Berthaud discloses that "the estimation is used to determine the amount by which a slave should adjust its local clock," after which time the slave "can either modify its local clock" or "produce a virtual clock that is calculated by adding that amount to the local clock." Ex.1012, pp.1-2.

Thus, the foregoing disclosure amounts to "smoothing" a time differential between master and slave devices. Ex.1009, ¶160.

Similarly yet, Eidson is a U.S. patent filed in 1998 that discloses "enhancements to time synchronization in distributing system," which "commonly

benefit from precise control of the timing at the distributed nodes." Ex.1013, 1:8-20. Eidson discloses its "time synchronization" enhancements in the context of an example "distributed system 10" that "includes a pair of nodes 12 and 14 interconnected via communication link 40," which is illustrated in FIG. 1:

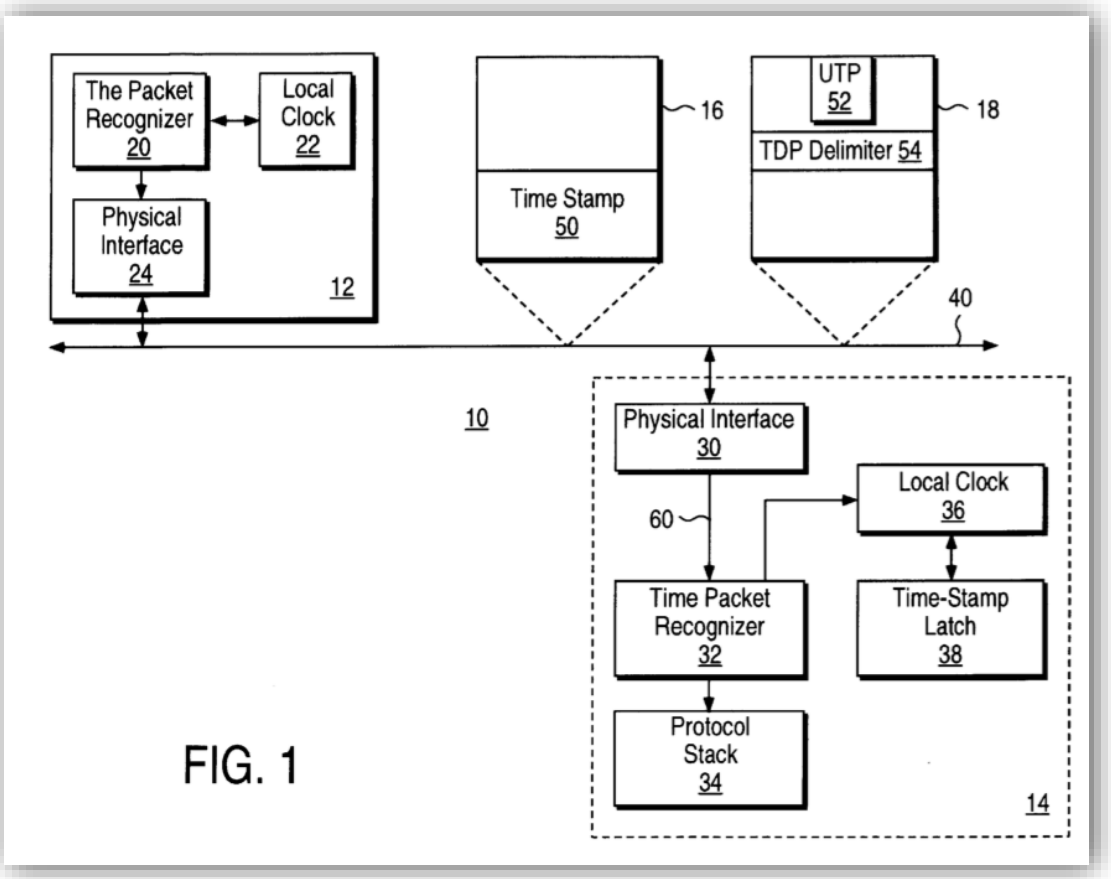

Id., FIG. 1, 2:42-44. As shown in FIG. 1, the nodes 12 and 14 include (1) "a pair of local clocks 22 and 36, respectively, which keep local time for the respective nodes 12 and 14," (2) "a pair of time packet recognizers 20 and 32, respectively, which exchange messages via the communication link 40 to maintain synchronization of the local clocks 22 and 36," and (3) a pair of "physical

interfaces 24 and 30," respectively, which "enable communication via the communication link 40." *Id*., 2:44-3:3.

In the distributed system of FIG. 1, the "packet recognizer 20" of "node 12" may generate and send a "timing data packet 18" that includes a "unique timing point (UTP) 52" followed by a "follow up packet 16" that includes a "time-stamp 50," which "indicates the local time in the node 12 at which the time packet recognized transferred the timing data packet 18 to the physical interface 24." *Id*., 2:51-65.

On the other side of the "communication link 40," the "time packet recognizer 32" of "node 14" first receives the "timing data packet 18" through "physical interface 30," and upon detecting the "UTP 52" in the packet, "causes a time-stamp latch 38 to latch a local time value from the local clock 36," which "indicates the local time at which the time packet recognizer 32 received the timing data packet 18." *Id.*, 2:66-3:28. In turn, the "time packet recognizer 32" of "node 14" receives "follow up packet 16" and then computes a "difference between the time-stamp 50 and the time value in the time-stamp latch 38," which "indicates the relative synchronization of the local clocks 22 and 36" and is used to "adjust the time value in the local clock 36 to conform the local clock 36 to the local clock 22." *Id.*, 3:28-36.

However, Eidson goes on to disclose that "the "physical interface 30" of "node 14" may introduce "jitter" that can "cause inaccuracies in the detected time of the UTP 52 by the time packet recognizer 32" and thereby "reduce the overall accuracy of synchronization between the local clocks 22 and 36 which may be obtained by the above technique." *Id.*, 4:8-15.

To address this, Eidson discloses that "[o]ne method for reducing the negative effects of jitter introduced by the physical interface 30 is to ***average the differences*** computed between the time value in the time-stamp latch 38 and the time-stamp 50 for a number of timing data packet and corresponding follow up packet pairs" and then use this "computed average" to adjust the local clock 36. *Id.*, 4:16-22 (emphasis added); *see also* 4:23-35. Thus, this "averaging" of the time difference between the local clocks of nodes 12 and 14 also amounts to "smoothing" a time differential between master and slave devices. Ex.1009, ¶165.

Moreover, for similar reasons to those discussed above, a PHOSITA would have been motivated to combine Janevski with any of Mills, Berthaud, or Eidson such that that a "participant" PVR was configured to apply a "smoothing" function to the periodically-calculated values for the "time count" differential as part of the "time synchronization" mechanism between the "initiator" and "participant" PVRs. Ex.1009, ¶166. Indeed, as noted above, Janevski expressly disclosed that any available "time synchronization" mechanism could be used to determine the "time

count" differential between the "initiator" and "participant" PVRs. Ex.1007, 8:53-64, 13:21-22. Moreover, the nature of the problem to be solved by both the '252 Patent and Janevski relates to the accuracy of synchronizing playback between rendering devices that are nodes in a distributed network, and Mills, Berthaud, and Eidson all disclose mechanisms for improving the accuracy of "time synchronization" between nodes in a distributed network. Ex.1009, ¶166.

For at least these reasons, it would have been obvious to a PHOSITA in 2001 to combine Janevski's teachings with the "time synchronization" mechanisms disclosed in any of Mills, Berthaud, or Eidson, such that a "participant" PVR is configured to apply a "smoothing" function to the periodically-calculated values for the "time count" differential between the "initiator" and "participant" PVRs. Ex.1009, ¶167.

Thus, Janevski as combined with any of Mills, Berthaud, or Eidson renders each of the Challenged Claims obvious under 35 U.S.C. §103(a). Ex.1009, ¶168.

XI. DETAILED ANALYSIS OF CHALLENGE#5

As established above, Janevski expressly discloses every element of Challenged Claims 1-3, 8, 11, and 17 other than the "smoothing" aspect of claim elements 1.3 and 11.3, which is an insignificant advance over Janevski that would have been obvious to a PHOSITA based on Janevski either alone or in combination with the Azevedo paper cited in Janevski. Ex.1009, ¶169. In addition, Petitioner

respectfully submits that Challenged Claims 1-3, 8, 11, and 17 would have been obvious under 35 U.S.C. §103(a) in light of Janevski as combined with Baumgartner (Challenge #5), which discloses the application of a "smoothing" function to a frame offset while synchronizing the rendering of two streams of multimedia frames. Ex.1009, ¶¶169-80.

For instance, Janevski discloses that a "participant" PVR periodically calculates a "frame" differential between the video frames that have been rendered by the "initiator" PVR and the video frames that have been rendered by the "participant" PVR, which can be represented in "video time." Ex.1007, 10:36-60, 13:24-14:63. As established above, this periodically-calculated "frame" differential amounts to "two or more calculated values for a differential between a time measure of a master rendering device and a corresponding time measure of the first slave device" that are "used to render a second content stream at the first slave device synchronously with the rendering of the first content stream at the master rendering device." Ex.1009, ¶171. Thus, under the "broadest reasonable construction," this disclosure satisfies every aspect of elements 1.3 and 11.3 other than the "smoothing." Id.

In a similar field of endeavor, Baumgartner discloses "[a] method and apparatus for synchronizing separate audio and video data streams in a multimedia system." Ex.1014, 6:18-20. According to Baumgartner, the "synchronization

method of the present invention is called periodically during a multimedia display to synchronize the video and audio data streams." Id., 6:30-41.

When the "synchronization method" is invoked, it begins by determining the "current audio and video position" of the separate audio and video data streams, which may be represented in terms of audio and video "frame number." Id., Abstract, 6:45-50. In turn, the "synchronization method compares the video and audio frame positions and computes a synchronization error value, which is essentially the number of frames by which the video frame position is in front of or behind the current audio frame position." Id., 6:50-55, 13:60-67.

After determining the "synchronization error value," the "synchronization method" transforms this "synchronization error value" into a "video tempo value" that is used by the multimedia system to adjust the rendering of the video stream. Id., 6:56-7:4. However, before performing this adjustment, the "synchronization method" "adjusts this video tempo value by applying a smoothing function, i.e., a weighted average of prior tempo values, to the determined tempo value." Id., 6:61-65 (emphasis added); see also Abstract, 14:49-62. According to Baumgartner, the purpose of applying this "smoothing function" is to "prevent overcompensation and to add stability to the synchronization method, thus allowing for smoother synchronization." Id., 14:58-60.

Thus, the foregoing disclosure amounts to "smoothing" a "frame" differential between the rendering of two media streams. Ex.1009, ¶175.

Moreover, for similar reasons to those discussed above, a PHOSITA would have been motivated to combine Janevski's teachings with Baumgartner's teachings such that that a "participant" PVR was configured to apply a "smoothing" function to the periodically-calculated values for the "frame" differential as part of the "frame synchronization" mechanism between the "initiator" and "participant" PVRs. Ex.1009, ¶176.

Indeed, the '252 Patent, Janevski, and Baumgartner all have the same general objective, which is to synchronize the playback of multiple streams of multimedia content. *See, e.g.*, Ex.1001, 1:54-56 (stating that "[i]t would be desirable to have the technique that would facilitate the rendering of the multimedia presentation in a synchronized manner"); Ex.1007, 1:8-11 (stating that the "present invention" is directed to "techniques for synchronizing playback of two or more digital streams based on renderable content of those streams); Ex.1014, 1:6-9 (stating that the "present invention" is directed to "synchronizing video and audio data streams in a computer system during a multimedia presentation"); Ex.1009, ¶177.

In addition, the '252 Patent, Janevski, and Baumgartner all express a desire to improve the accuracy of synchronizing playback of multiple streams of

multimedia content to improve user experience. Ex.1008, pp.1, 3; Ex.1007, Abstract, 3:43-57, 5:3-5; Ex.1014, 4:24-6:15; Ex.1009, ¶178.

For at least these reasons, it would have been obvious to a PHOSITA in 2001 to combine Janevski's teachings with the "smoothing" function disclosed in Baumgartner, such that a "participant" PVR is configured to apply a "smoothing" function to the periodically-calculated values for the "time count" differential between the "initiator" and "participant" PVRs. Ex.1009, ¶179.

Thus, the combination of Janevski and Baumgartner renders each of the Challenged Claims obvious under 35 U.S.C. §103(a). Ex.1009, ¶180.

XII. CONCLUSION

Petitioner respectfully submits that this Petition shows a reasonable likelihood that Petitioner will prevail with respect to at least one of the Challenged Claims of the '252 Patent for which Petitioner seeks Review. Accordingly, Petitioner requests that the USPTO grant this Petition, initiate *Inter Partes* Review of Claims 1-3, 8, 11, and 17 of the '252 Patent, and cancel these claims as unpatentable.

Date: March 9, 2018

/Rory P. Shea Reg. No. 60,529/
Rory P. Shea

Rory P. Shea (USPTO Reg. No. 60,529)
Cole B. Richter (USPTO Reg. No. 65,398)
George I. Lee (USPTO Reg. No. 39,269)
Michael P. Boyea (USPTO Reg. No. 70,248)
Lee Sullivan Shea & Smith LLP
224 North Desplaines Street, Suite 250
Chicago, Illinois 60661
Tel: (312) 754-9602
Fax: (312) 754-9603
shea@ls3ip.com
richter@ls3ip.com
lee@ls3ip.com
boyea@ls3ip.com

Attorneys for Petitioner Sonos, Inc.

CERTIFICATE OF COMPLIANCE

Pursuant to 37 C.F.R. §§42.24 and 42.6 the undersigned hereby certifies that this Petition complies with the type-volume limitation and general format requirements.

1. Exclusive of the exempted portions of the Petition, as provided in 37 C.F.R. §42.24(a)(1)(i), the Petition contains 12,956 words.

2. The Petition has been prepared in proportionally spaced typeface using Microsoft® Word for Mac v. 16.10 in 14-point Times New Roman font. The undersigned has relied upon the word count feature of this word processing system in preparing this certificate.

Date: March 9, 2018

/Rory P. Shea Reg. No. 60,529/

Rory P. Shea
Lee Sullivan Shea & Smith LLP
224 North Desplaines Street, Suite 250
Chicago, Illinois 60661
Tel: (312) 754-9602
Fax: (312) 754-9603
shea@ls3ip.com

CERTIFICATE OF SERVICE

In accordance with 37 CFR §42.105, I hereby certify that on March 9, 2018, a true copy of the accompanying PETITION FOR *INTER PARTES* REVIEW OF U.S. PATENT NO. 8,942,252, including all exhibits, was served via Federal Express upon the Patent Owner at the following correspondence address of record for U.S. Patent No. 8,942,252:

MHKKG (Implicit/BeLabs)
1120 S. Capital of Texas Hwy
Building 2, Suite 300
Austin, TX 78746

Date: March 9, 2018

/Rory P. Shea Reg. No. 60,529/

Rory P. Shea
Lee Sullivan Shea & Smith LLP
224 North Desplaines Street, Suite 250
Chicago, Illinois 60661
Tel: (312) 754-9602
Fax: (312) 754-9603
shea@ls3ip.com