US007643894B2

(12) **United States Patent**
Braithwaite et al.

(10) **Patent No.: US 7,643,894 B2**
(45) **Date of Patent: Jan. 5, 2010**

(54) **AUDIO NETWORK DISTRIBUTION SYSTEM**

(75) Inventors: **Michael Braithwaite**, Austin, TX (US); **Herman Cardenas**, Georgetown, TX (US)

(73) Assignee: **Netstreams LLC**, Austin, TX (US)

(*) Notice: Subject to any disclaimer, the term of this patent is extended or adjusted under 35 U.S.C. 154(b) by 906 days.

(21) Appl. No.: **10/513,737**

(22) PCT Filed: **May 8, 2003**

(86) PCT No.: **PCT/US03/14603**

§ 371 (c)(1),
(2), (4) Date: **Nov. 4, 2004**

(87) PCT Pub. No.: **WO03/096741**

PCT Pub. Date: **Nov. 20, 2003**

(65) **Prior Publication Data**

US 2005/0131558 A1 Jun. 16, 2005

Related U.S. Application Data

(60) Provisional application No. 60/379,313, filed on May 9, 2002.

(51) **Int. Cl.**
G06F 17/00 (2006.01)

(52) **U.S. Cl.** **700/94**

(58) **Field of Classification Search** 700/94; 381/77, 80, 81, 82, 85, 55
See application file for complete search history.

(56) **References Cited**

U.S. PATENT DOCUMENTS

5,402,499 A 3/1995 Robison
5,406,634 A 4/1995 Anderson
5,519,641 A * 5/1996 Beers et al. 709/208
5,544,228 A 8/1996 Wagner et al.
D385,880 S 11/1997 Oba
5,722,041 A 2/1998 Freadman
5,729,611 A * 3/1998 Bonneville 381/55
5,799,042 A 8/1998 Xiao
5,822,440 A 10/1998 Oltman
5,832,024 A 11/1998 Schotz
5,903,135 A 5/1999 Posses
5,946,343 A 8/1999 Schotz
6,064,699 A 5/2000 Law
6,085,236 A 7/2000 Lea
6,108,625 A 8/2000 Kim
6,185,305 B1 2/2001 Reinold
6,263,503 B1 7/2001 Margulis
6,327,477 B1 12/2001 Hachimura
6,327,563 B1 12/2001 Takagi

(Continued)

FOREIGN PATENT DOCUMENTS

AU 2003241405 A1 1/2004

(Continued)

Primary Examiner—Ping Lee
(74) *Attorney, Agent, or Firm*—Matthew J Booth & Associates PLLC; Matthew J Booth

(57) **ABSTRACT**

This invention is a networked audio system (**20**). The invention includes a plurality of speaker nodes (**100**), a plurality of self-sufficient audio source node devices (**300**), an internet interface (**400**), a network control server (**310**), a legacy converter and controller (**600**) that connects to one or more legacy sources (**500**), all connected via an internet protocol network (**200**).

20 Claims, 9 Drawing Sheets

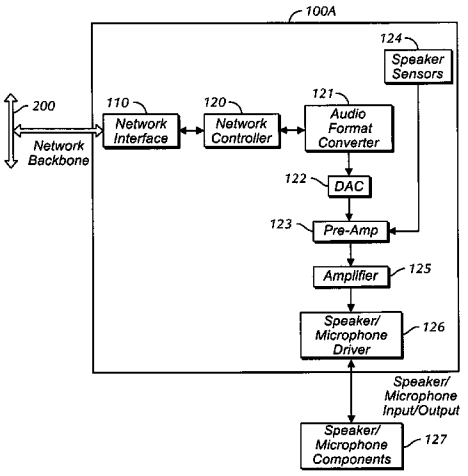

GOOGLE EXHIBIT 1024

U.S. PATENT DOCUMENTS

6,329,908	B1	12/2001	Frecska	
6,378,010	B1	4/2002	Burks	
6,826,283	B1	11/2004	Wheeler et al.	
6,907,458	B2	6/2005	Tomassetti et al.	
7,039,193	B2 *	5/2006	Mantegna et al.	381/58
7,206,404	B2 *	4/2007	Parry et al.	379/406.01
2001/0005174	A1	6/2001	Olson	
2002/0026541	A1	2/2002	Suzuki	
2002/0059425	A1	5/2002	Belfiore	
2002/0065568	A1	5/2002	Silfvast	
2002/0072816	A1	6/2002	Shdema	
2002/0072817	A1	6/2002	Champion	
2002/0075965	A1	6/2002	Claesson	
2002/0082730	A1	6/2002	Capps	
2002/0087224	A1	7/2002	Barile	
2003/0023741	A1	1/2003	Tomassetti et al.	
2006/0287746	A1	12/2006	Braithwaite et al.	
2008/0109095	A1	5/2008	Braithwaite et al.	
2008/0114481	A1	5/2008	Braithwaite et al.	

FOREIGN PATENT DOCUMENTS

AU	2008207498	A1	9/2008
AU	2003241405	B2	10/2008
CA	2485104		11/2003
EP	1098548	A2	5/2001
EP	1146775	A2	10/2001
EP	1504367		11/2003
KR	10-2005-0005472	A1	1/2005
WO	WO03096741		11/2003

* cited by examiner

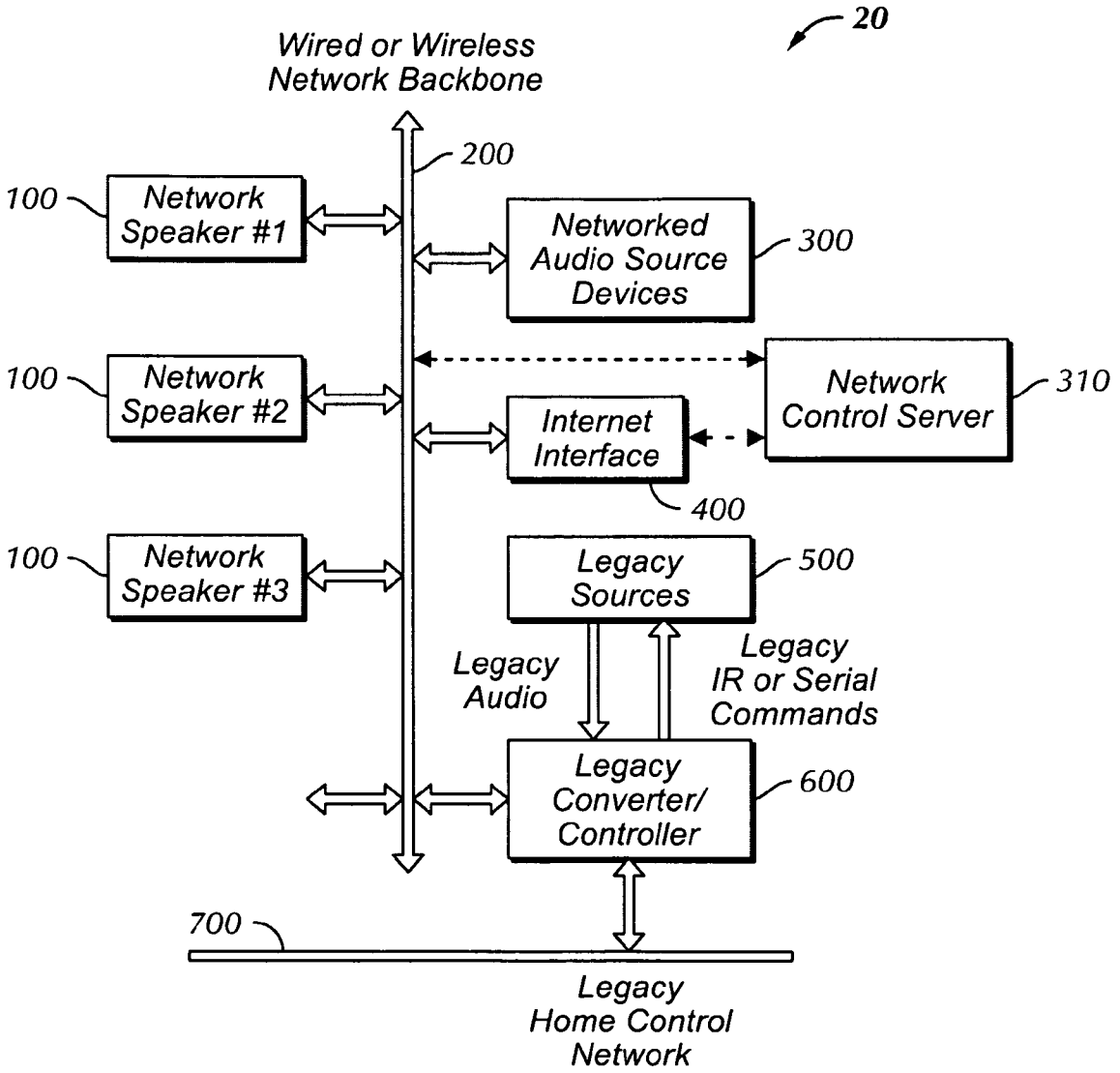
20
Wired or Wireless
Network Backbone
200
100
Network
Speaker #1
Networked
Audio Source
Devices
300
100
Network
Speaker #2
Network
Control Server
310
Internet
Interface
400
100
Network
Speaker #3
Legacy
Sources
500
Legacy
Audio
Legacy
IR or Serial
Commands
Legacy
Converter/
Controller
600
700
Legacy
Home Control
Network

FIG. 1

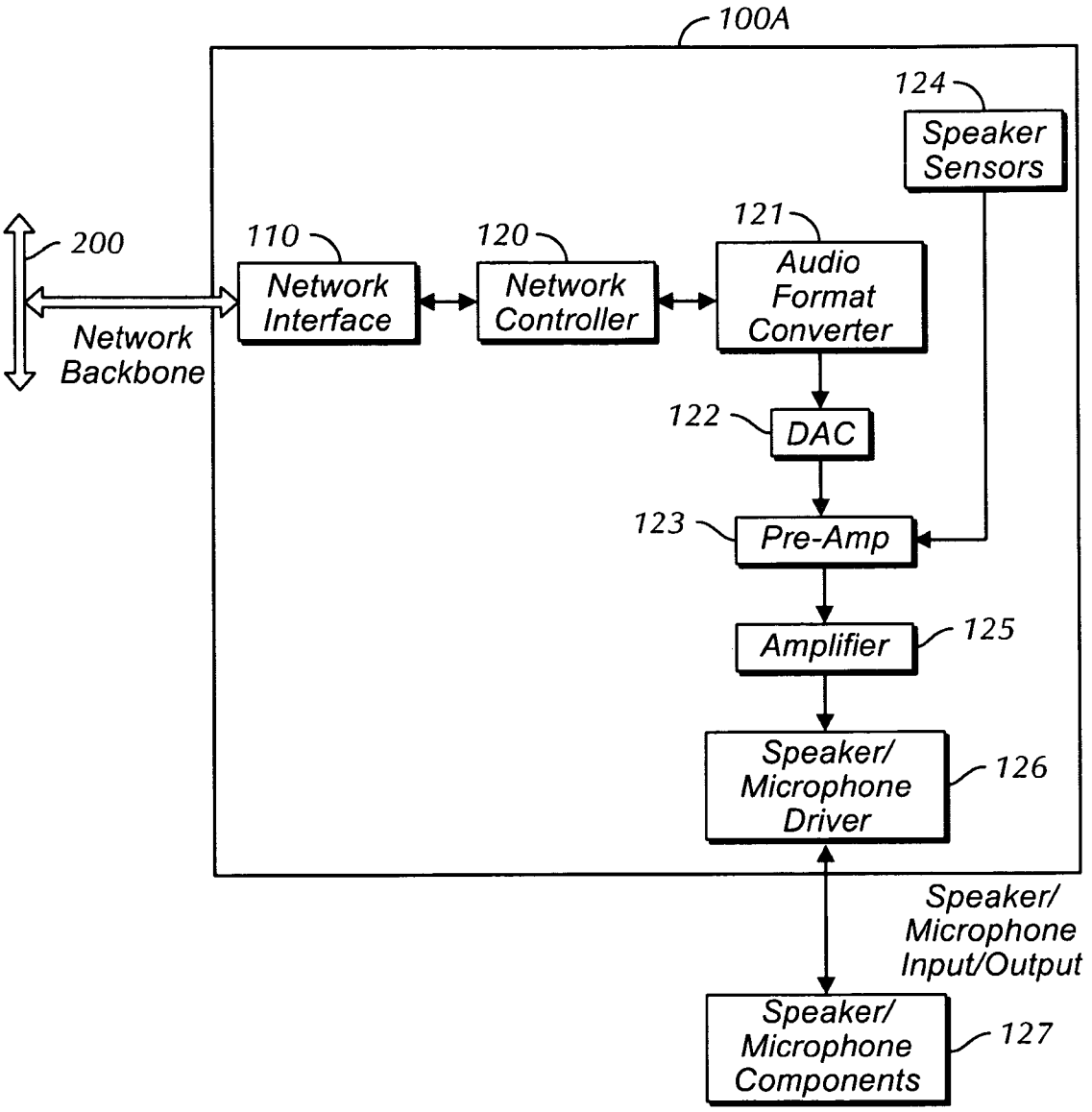
100A
124
Speaker Sensors
200
110
Network Interface
120
Network Controller
121
Audio Format Converter
Network Backbone
122
DAC
123
Pre-Amp
Amplifier
125
Speaker/ Microphone Driver
126
Speaker/ Microphone Input/Output
Speaker/ Microphone Components
127

FIG. 2

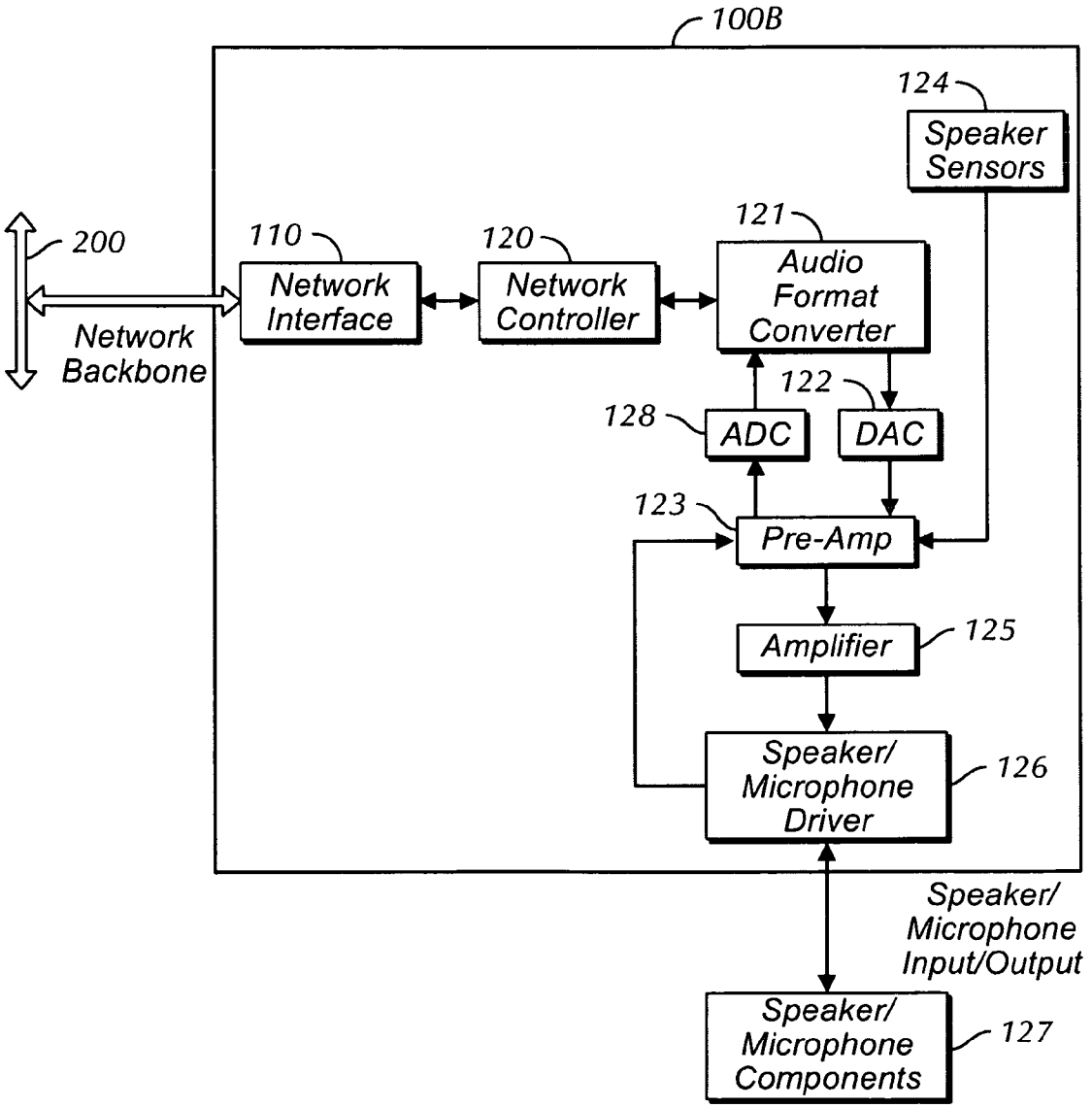
100B
124
Speaker Sensors
200
110
Network Interface
120
Network Controller
121
Audio Format Converter
Network Backbone
122
128
ADC
DAC
123
Pre-Amp
Amplifier
125
Speaker/ Microphone Driver
126
Speaker/ Microphone Input/Output
Speaker/ Microphone Components
127

FIG. 3

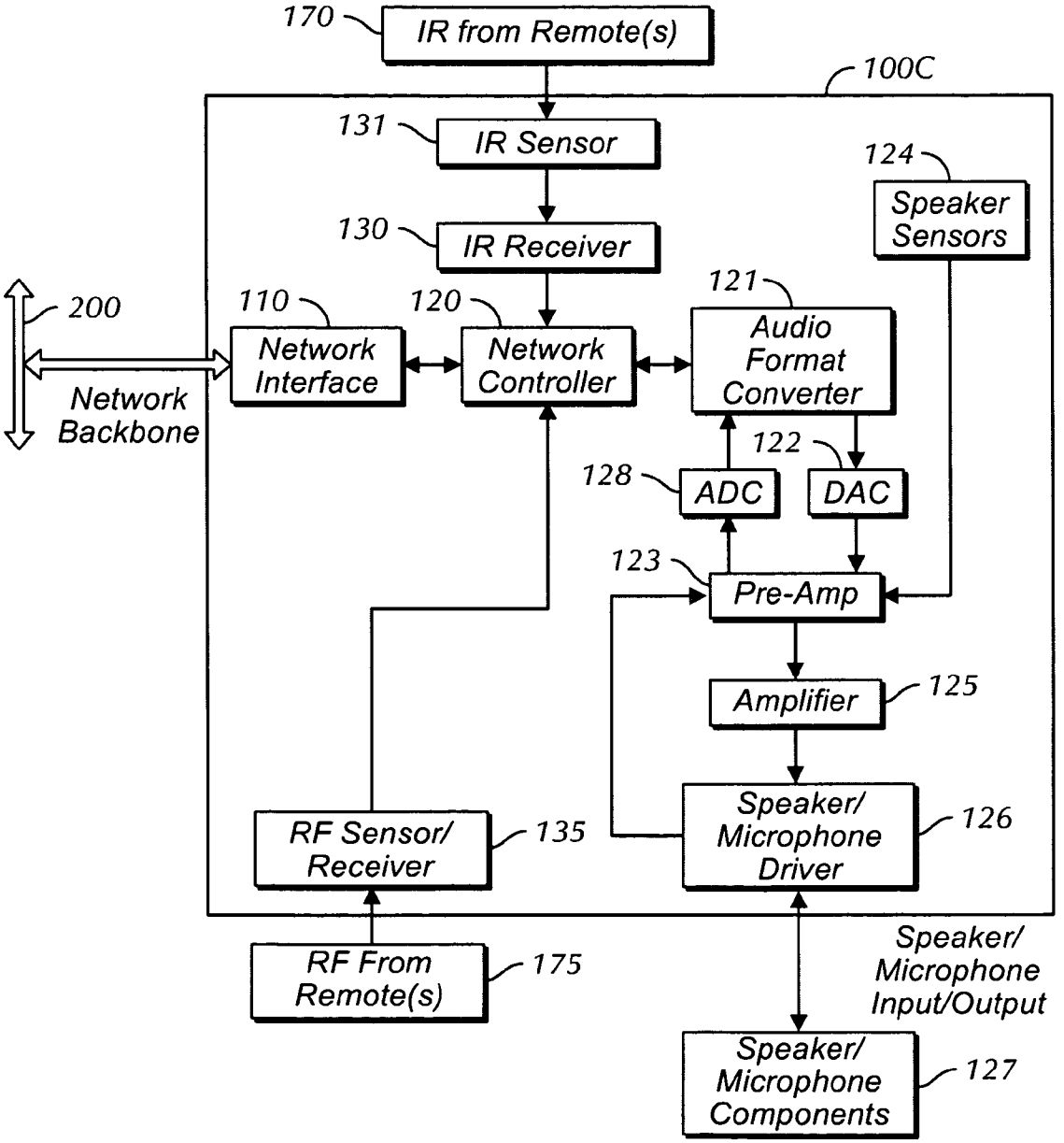
170
IR from Remote(s)
100C
131
IR Sensor
124
Speaker Sensors
130
IR Receiver
200
110
120
121
Network Interface
Network Controller
Audio Format Converter
Network Backbone
122
128
ADC
DAC
123
Pre-Amp
Amplifier
125
Speaker/ Microphone Driver
126
RF Sensor/ Receiver
135
RF From Remote(s)
175
Speaker/ Microphone Input/Output
Speaker/ Microphone Components
127

FIG. 4

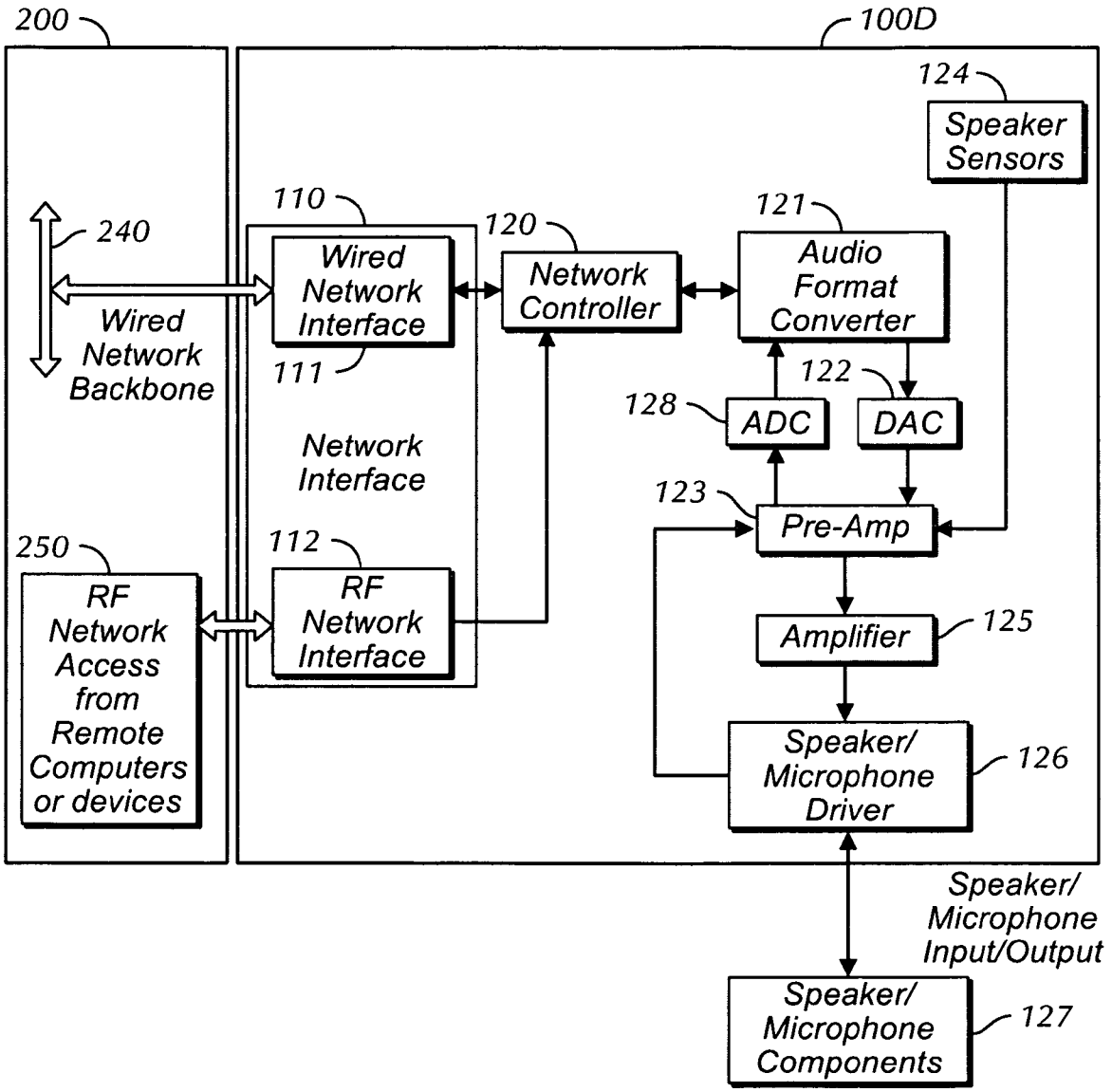
200
100D
124
Speaker Sensors
110
120
121
240
Wired Network Interface
Network Controller
Audio Format Converter
Wired Network Backbone
111
122
128
ADC
DAC
Network Interface
123
Pre-Amp
250
112
RF Network Access from Remote Computers or devices
RF Network Interface
Amplifier
125
Speaker/ Microphone Driver
126
Speaker/ Microphone Input/Output
Speaker/ Microphone Components
127

FIG. 5

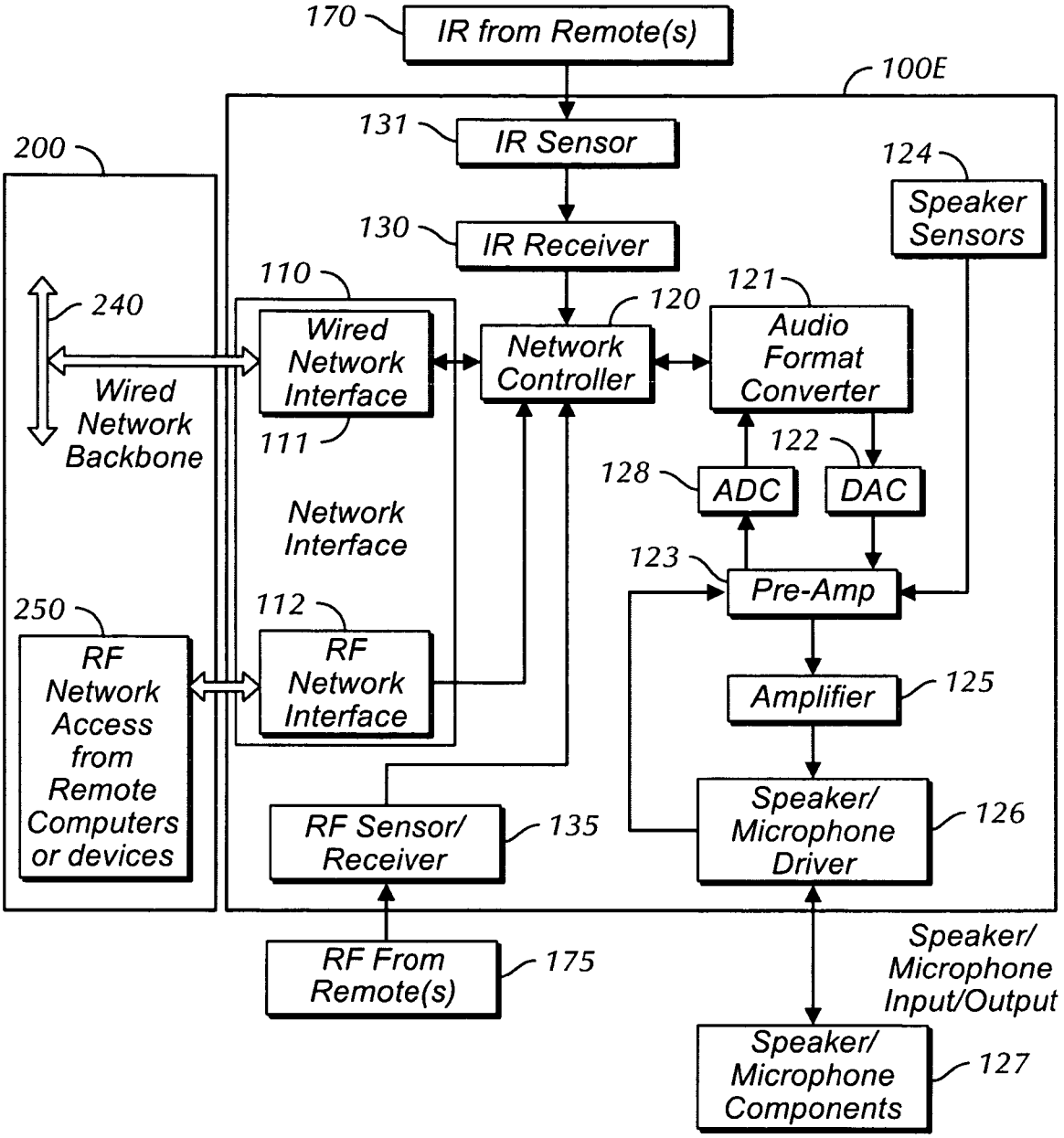
170
IR from Remote(s)
100E
131
IR Sensor
200
124
Speaker Sensors
130
IR Receiver
110
121
240
120
Wired Network Interface
Network Controller
Audio Format Converter
Wired Network Backbone
111
122
128
ADC
DAC
Network Interface
123
Pre-Amp
250
112
RF Network Access from Remote Computers or devices
RF Network Interface
Amplifier
125
Speaker/ Microphone Driver
126
RF Sensor/ Receiver
135
RF From Remote(s)
175
Speaker/ Microphone Input/Output
Speaker/ Microphone Components
127

FIG. 6

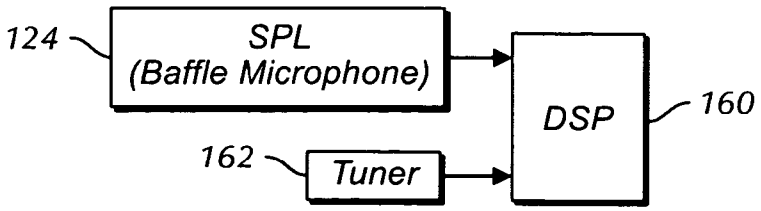
124
SPL (Baffle Microphone)
DSP
160
162
Tuner

FIG. 7

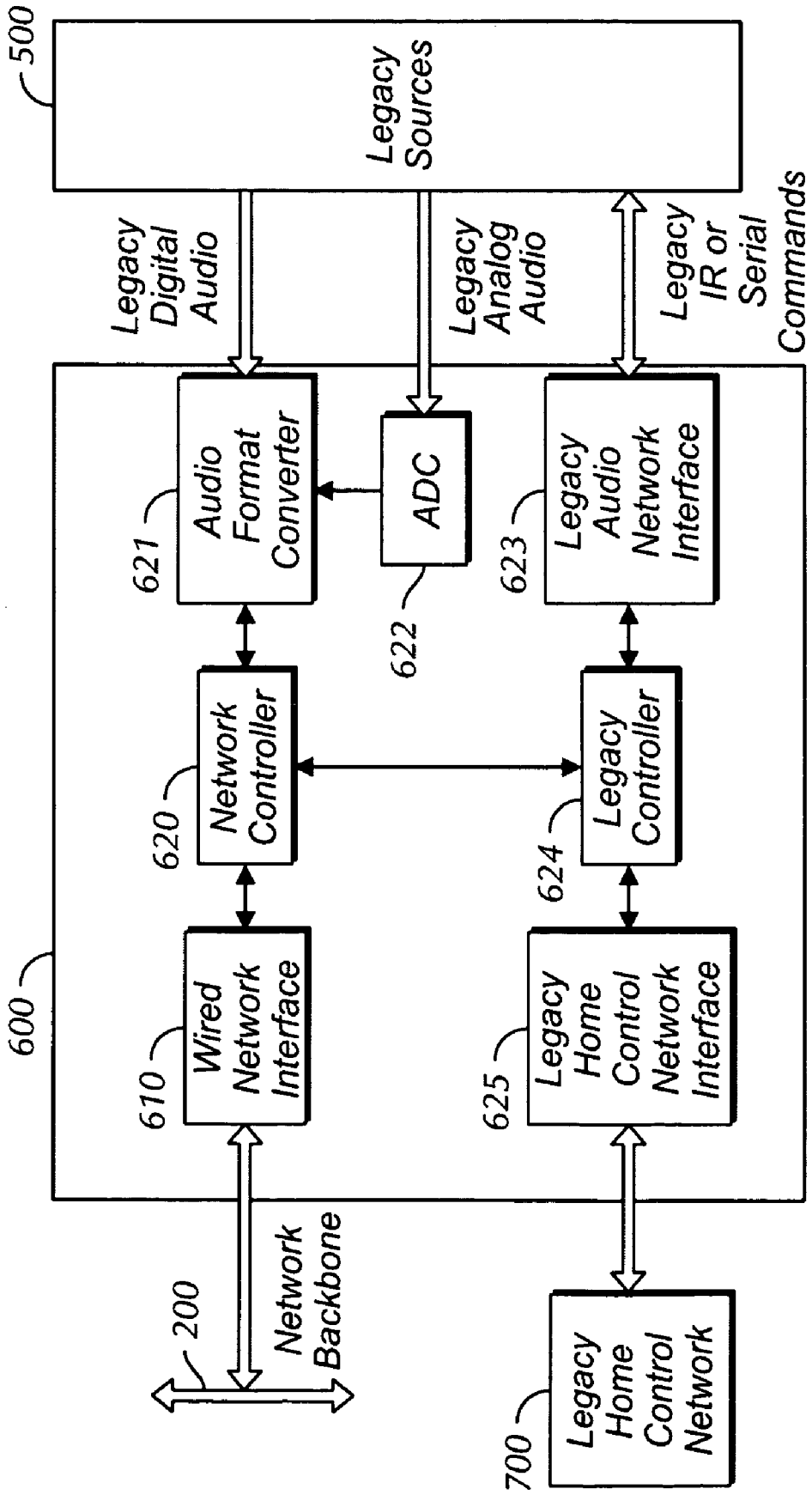
500
Legacy Sources
Legacy Digital Audio
Legacy Analog Audio
Legacy IR or Serial Commands
600
621
Audio Format Converter
ADC
622
623
Legacy Audio Network Interface
620
Network Controller
624
Legacy Controller
610
Wired Network Interface
625
Legacy Home Control Network Interface
200
Network Backbone
700
Legacy Home Control Network

FIG. 8

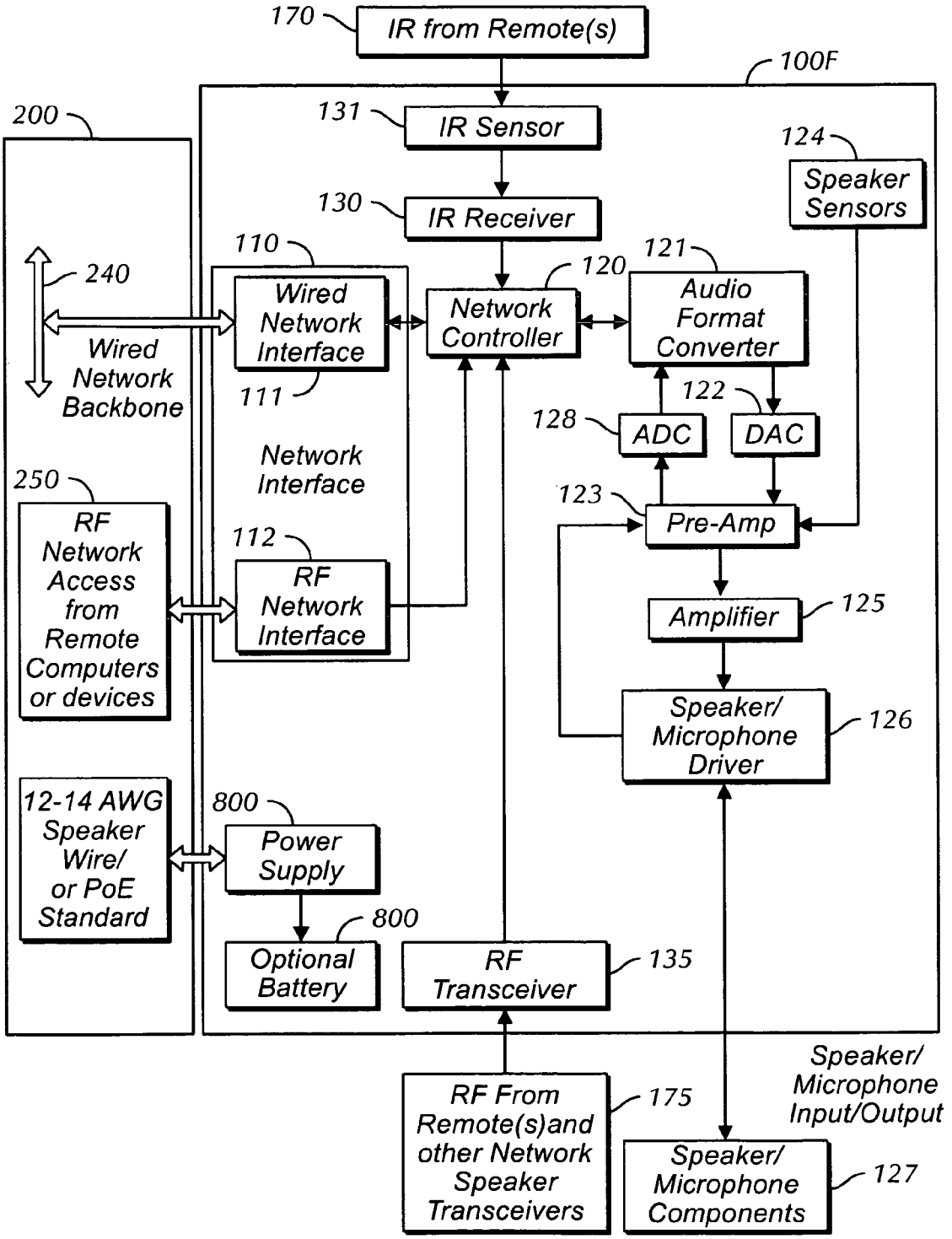
170
IR from Remote(s)
100F
200
131
IR Sensor
124
Speaker Sensors
130
IR Receiver
110
121
240
120
Wired Network Interface
Network Controller
Audio Format Converter
Wired Network Backbone
111
122
128
ADC
DAC
Network Interface
250
123
Pre-Amp
RF Network Access from Remote Computers or devices
112
RF Network Interface
Amplifier
125
Speaker/ Microphone Driver
126
12-14 AWG Speaker Wire/ or PoE Standard
800
Power Supply
800
Optional Battery
RF Transceiver
135
Speaker/ Microphone Input/Output
RF From Remote(s)and other Network Speaker Transceivers
175
Speaker/ Microphone Components
127

FIG. 9

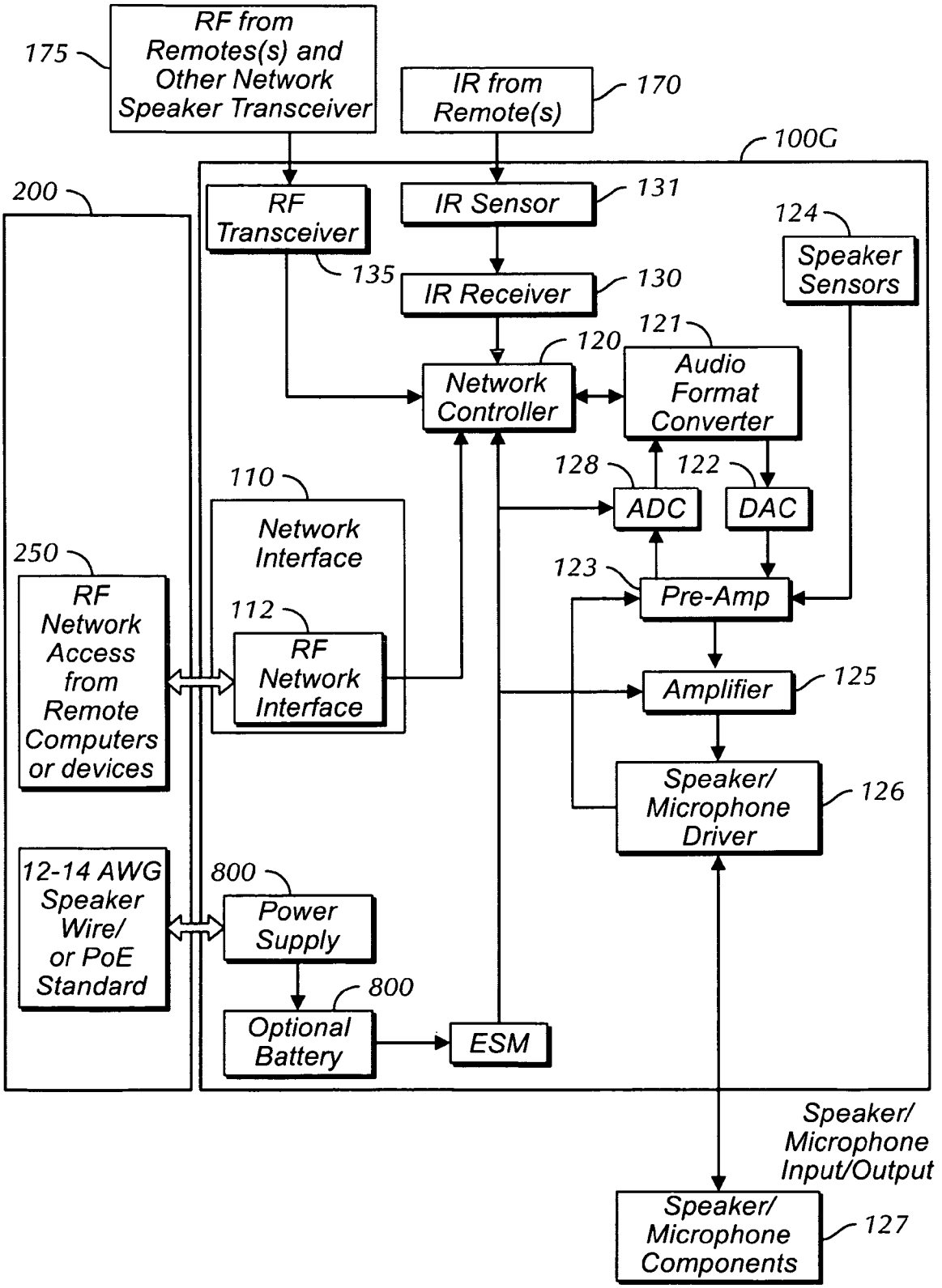
RF from Remotes(s) and Other Network Speaker Transceiver
175
IR from Remote(s)
170
100G
200
RF Transceiver
IR Sensor
131
124
Speaker Sensors
135
IR Receiver
130
121
120
Network Controller
Audio Format Converter
128
122
110
ADC
DAC
Network Interface
250
123
Pre-Amp
112
RF Network Access from Remote Computers or devices
RF Network Interface
Amplifier
125
Speaker/ Microphone Driver
126
12-14 AWG Speaker Wire/ or PoE Standard
800
Power Supply
800
Optional Battery
ESM
Speaker/ Microphone Input/Output
Speaker/ Microphone Components
127

FIG. 10

AUDIO NETWORK DISTRIBUTION SYSTEM

BACKGROUND OF THE INVENTION

Currently, most audio speakers are passive devices that receive an analog or digital audio signal. A few advanced models have limited self-diagnostics that can be communicated out over additional wire runs as well. These speakers are usually wired to racks or source switching pre-amps and amplifiers. The problem with this approach is that these systems are not very flexible. It is hard to expand the audio sources that can be heard through the speakers embedded in walls or other places after the system has been installed without buying and installing additional costly components. Other audio sources include as home control system voice communication, intercom audio, soundtracks for CD-ROM games, solid-state sound memories. Digital audio broadcasting systems, and even Internet audio can not easily be added and routed through to the existing speakers at a future date if the existing system was not originally designed to input and handle it. This is mostly due to the ongoing proliferation of new audio compression formats. High-quality digital audio data takes a lot of hard disk space to store (or channel bandwidth to transmit). Because of this many companies have worked on compressing and or coding of the bit stream to allow for a smaller binary footprint. This allows for high quality music to take up less storage space and to be transported across vast networks with a smaller amount of data, and therefore less bandwidth. However, these new compression and encoding formats require that un-compression and decoding be performed to reconstitute the original audio before it is played out the loudspeaker. If an existing audio system is limited to reconstituting only audio formats known at the time of installation, the audio system quickly becomes obsolete.

Many new products have wireless network capabilities, but still cannot be easily connected into a home network, because of a lack of easily accessible wireless to wired network bridging within range of the device. This can especially be a problem if the wireless device is a handheld mobile unit such as a PDA, and due to a lack of access points, can not communicate from all rooms in the house.

The current approach to controlling audio and doing home automation is often cumbersome. The sound system remote that allows the room audio level to be adjusted does not allow the room lights to be dimmed. Therefore, different remote controllers for each function are needed. Nor do users like the "wall clutter" created by putting separate multiple audio and other home network control units in the walls. Wireless solutions to this problem such as Radio Frequency, known as RF, or Infra-Red, called IR, have limitations. The biggest limitation for RF is that in many large cites, the RF noise background is very high, creating communication problems, and there may be health concerns with excessive RF. The IR limitation is that IR is effective in "line of sight" only, and the home automation devices to be controlled may be in other rooms. These problems are compounded in retrofit situations where die minimal changes that affect the current building and existing systems are desired.

It is therefore the object of this invention to provide a networked speaker, so that an audio distribution system can be created that is integrated with the home automation system into a home network that permits vocal feedback, status, and even control with the audio through the network speakers. The network should let the user know what is happening, and provide very intuitive instruction on how to use the system. This will enable the audio speakers to easily adjust to and allow new audio sources and to become wireless access points in the home, or provide the wireless bridge to the hard-wired network.

DESCRIPTION OF THE DRAWINGS

These and other objects and features of the invention will become more apparent upon a perusal of the following description taken in conjunction with the accompanying drawings wherein:

FIG. **1** is a block diagram of an audio distribution system.

FIG. **2** is a block diagram of a network speaker embodiment of the system shown in FIG. **1**.

FIG. **3** is a block diagram of another network speaker embodiment.

FIG. **4** is a block diagram of another network speaker embodiment.

FIG. **5** is a block diagram of another network speaker embodiment.

FIG. **6** is a block diagram of another network speaker embodiment.

FIG. **7** is a block diagram of the internal components of a network speaker embodiment.

FIG. **8** is a block diagram of a Legacy Audio Converter/Controller for use in the system shown in FIG. **1**.

FIG. **9** is a block diagram of a network speaker including power options.

FIG. **10** is a network speaker including battery powered options and an energy storage module.

DETAILED DESCRIPTION OF THE PREFERRED EMBODIMENT

An audio distribution network system **20** (FIG. **1**) includes a plurality of speaker node units **100** which are coupled to a Transport Control Protocol/Internet Protocol (TCP/IP) based network backbone **200**. Also coupled to the network backbone **200** are networked audio source node devices **300**, an Internet service interface **400**, and a Legacy converter/controller **600**. Legacy sources **500** provide analog or digital linear PCM (Pulse Coded Modulation) audio to be converted into a packet switched digital coding for transport across the network. They will also provide analog video which will be used for control status feedback, as well as conversion to a packet switched digital coding for transport across the network. In addition, the Legacy sources **500** will also receive IR or serial commands from the converter/controller **600** which also communicates with a Legacy home control network **700**. Some legacy sources **500** may also provide serial communications to the converter/controller **600**.

The networked audio source devices **300** can consist of any number of networked digital audio source devices (music playback devices) such as personal computers or audio servers that are able to communicate with one another over the shared TCP/IP network **200** and have the resources to serve digital audio files (WMA, MP3, Corona, etc.) to the network. Bit streamed audio (digital music, in the form of binary data that is sent in packets) from the Internet also may enter the system **20** from the Internet interface **400**. The Legacy audio devices **500** (existing analog audio equipment, i.e. CD players, tape decks, VCR's) have their audio converted into a packet switched digital network format (WMA, MP3, Corona) by the Legacy Converter **600** or by the network speakers **100**. The network speaker **100** can also real time encode sound received from its internal microphone or from reversing the transduction circuit from the speaker to perform the act of capturing sound waves present in the room, and then

coding that sound and providing it for use on the network **20**, including by use of differential masking for control purposes. Any new device that is able to send audio out on the network can serve as the audio source for a network speaker **100** as long as the network speaker **100** understands the audio format. Control commands that affect the audio distribution can come from the network control server **310**, network audio source devices **300**, the Internet interface **400**, the legacy home control network **700** via the legacy converter/controller **600**, or from other network speakers **100**.

The system **20** is a collection of independent computers or other intelligent devices that communicate with one another over the shared TCP/IP network **200**. For example, the system **20** can be part of the Internet linked networks that are worldwide in scope and facilitate data communication services such as remote login, file transfer, electronic mail, the World Wide Web and newsgroups, or for security reasons part of a home intranet network utilizing Internet-type tools, but available only within that home. The home intranet is usually connected to the Internet via an Internet interface **400**. Intranets are often referred to as LANs (Local Area Networks).

The home network backbone **200** communicates using the TCP/IP network protocol consisting of standards that allow network members to communicate. A protocol defines how computers and other intelligent devices will identify one another on a network, the form that the data should take in transit, and how this information is processed once it reaches its final destination. Protocols also define procedures for handling lost or damaged transmissions or "packets". The TCP/IP network protocol is made up of layers of protocols, each building on the protocol layers below it. The basic layer is the physical layer protocol that defines how the data is physically sent through the physical communication medium, such as Thickwire, thin coax, unshielded twisted pair, fiber optic, telephone cable, fiber optic cable, RF, IR, power line wires, etc. Those physical media requiring an actual physical connection of some type, such as Thickwire, thin coax, unshielded twisted pair, fiber optic, power line, telephone cable, or fiber optic cable, to the network device are called wired media Those physical media not requiring an actual physical wire connection of any type to the network device, such as RF and IR, are called wireless media. A TCP/IP home network can be totally wired, totally wireless, or a mix of wireless and wired. A TCP/IP home network is not limited to a single physical communication medium. Different physical communication media can be connected together by bridging components to create a unified communication network. Each network physical media has its physical layer protocol that defines the form that the data should take in transit on that particular physical media. The bridging component enables the transfer and conversion of communication on one physical medium and its physical layer protocol to a different physical media and its physical layer protocol. Bridging components also may provide a proxy from one network to the other, this will be common among UpnP V1 to V2, and with Ipv6 to Ipv4 (Internet Protocol version 6, 4). Common physical layer LAN technology in use today include Ethernet, Token Ring, Fast Ethernet, Fiber Distributed Data Interface (FDDI), Asynchronous Transfer Mode (ATM) and LocalTalk. Physical layer protocols that are very similar over slightly different physical media are sometimes referred to be the same name but of different type. An example are the three common types of Fast Ethernet: 100 BASE-TX for use with level 5 UTP cable, 100BASE-FX for use with fiber-optic cable, and 100BASE-T4 which utilizes an extra two wires for use with level 3 UTP cable. The TCP/IP protocol layers are well known and will not be further described in greater detail.

The system **20** may have any number of networked self-sufficient digital audio source devices **300** in it, such as a digital music storage device, PC, music player, personal Digital Assistant (PDA), on board automobile music system, digital integrated audio equipment, personal digital recorder or video digital recorder. Networked audio source devices **300** can provide digital audio files such as WMA, MP3, "Corona", and MLP from its hard disk, internal flash, or an audio input such as a microphone or CD reader or music player. The system **20** may also have any number of network control servers **310** that can encompass a specialized network server, usually a specialized, network-based hardware device designed to perform a single or specialized set of server functions. It is usually characterized by a minimal operating architecture, and client access that is independent of any operating system or proprietary protocol. Print servers, terminal servers, audio servers, control remote access servers and network time servers are examples of server devices which are specialized for particular functions. Often these types of servers have unique configuration attributes in hardware or software that help them to perform best in their particular arena. While specialized hardware devices are often used to perform these functions in large systems, the specialized functions served by the network server could be performed by a more general use computer. A single computer, (sometimes referred to as a RISC (reduction instruction set computer), called a web server, could combine the functionality of the networked audio source devices **300** and the Internet interface **400**. If no connection to the Internet is desired, the Internet interface **400** function can be removed from the system without loss of intranet network integrity. Network and web servers are well known and will not be described in greater detail.

The legacy home control network **700** is an existing network of devices in the home used to automate and control the home. If the legacy home control network **700** can not communicate over a shared TCP/IP network **200**, it cannot directly control or be controlled by the network speakers, and the two dissimilar networks must be bridged by a Legacy Converter/Controller **600**. Any legacy home control network **700** that can communicate within the system **20** over a shared TCP/IP network could be combined into the home network backbone **200** and then the legacy home control network **700** device would have access to and be able to control the network speaker **100** if it has the resources and instructions to do so. The Legacy Converter/Controller **600** can also be used to provide network access to un-networked legacy devices that are able to serve as command and control interfaces such as the telephone, cell phone, RF remote, IR remote, direct voice controller or keypad. A networked audio source **300** such as a PDA, also can act as the legacy converter/controller for a legacy device such as an attached cell phone.

The legacy home audio sources **500** are other audio sources that are not able to communicate over a shared TCP/IP network **200**, such as analog audio players, CD players, video game players, tape players, telephone, VCRs or other audio sources that are not able to communicate over a shared TCP/IP network **200**. The legacy Converter/Controller **600** takes the analog or digital linear PCM audio from the Legacy home sources **500**, converts it into an acceptable digital format or formats if needed, and serves the audio as needed over the shared TCP/IP home network backbone **200**. If the legacy home audio source **500** provides an analog audio to the Legacy Converter/Controller **600**, the Legacy Converter/Controller **600** must convert the analog audio into an appropriate digital audio format before serving it to the network. The Legacy Converter/Controller **600** can also convert com-

mands sent from the home network **200** to the legacy home source **500** into a command format that is understood by the legacy home source **500**, such as serial, RF or IR commands. A system may have multiple Legacy Converter/Controllers **600** for each legacy home source **500** or legacy home control network **700**, or a Legacy Converter/Controller **600** may convert and control more than one legacy home source **500** or multiple Legacy home control networks **700**.

Illustrated in FIG. **2** is one network speaker embodiment **100**A. A network interface **110** couples the network backbone **200** of the system **20** (FIG. **1**) to a network controller **120** which feeds a digital to analog converter (DAC) **122** via an audio format converter **121**. Receiving an output from the DAC **122** is a pre-amplifier **123** which also receives inputs from speaker sensors **124**. An amplifier **125** receives the output of the pre-amp **123** and feeds a speaker/microphone driver **126** coupled to speaker/microphone components **127**.

The network speakers **100**A may be enclosed in a case or box, in a ceiling embedded in or behind a wall, or in a car and constitute the most prevalent enabling components in the system **20**. Each network speaker **100**A communicates to the network backbone (Ethernet) **200** through the network interface **110** that handles the physical layer hardware protocol. The network interface **110** may connect to one or more physical layers, wired or unwired or both. From there the Network Speaker Controller **120** provides the intelligence to run the various application features of the network speaker, including the higher levels of the TCP/IP protocol. Audio sources (Digital Music content) received from the network and addressed to a particular network speaker **100**A are sent to the audio format converter **121** that converts the source digital audio format into a form ready to be converted to analog. The correctly re-formatted digital signal is sent to the digital to DAC **122** to be converted from digital to analog. The analog signal then goes to a pre-amp **123** where the signal is adjusted and filtered. Included in the pre-amp **123** can be an active crossover which operates at preamp level to limit the frequencies to the amplifier or amplifiers connected to it. The speaker components connected to these pre-amplifiers would therefore receive a limited frequency range, and can be optimized for the frequencies received. The pre-amp signal then goes to the amplifier section **125**, and the amplified signal proceeds to the speaker/microphone driver **126** and out the speaker/microphone components **127** to become audio sound waves. Because the application software in the Network Speaker controller **120** and audio format converter **121** can be updated over the network and with the use of sufficient processing power, and presence of ample memory, the network speaker **100**A can be made to play currently unknown digital formats in the future. The audio format converter **121** may have the DAC **122** built in. The speaker sensors **124** which may include temperature, SPL (such as a baffle microphone), ambient and noise floor, pressure, and voltage sensors provide the on board application speaker feedback which enables internal auto adjustment to enhance speaker protection and performance and allow for sending control signals back to other devices which may need/want the status information. A very useful application for this would be for the use of differential masking. This is a process in which you are comparing samples from the digital source against the real time encoding samples from within the air space. The original digital source is then subtracted from the combined real time encoding and the result is a new sample.

The network interface **110** connects the network speaker **100**A to the actual network backbone **200** and will vary depending on the physical media and physical layer protocol used. Network interface cards, commonly referred to as NICs, are often used to connect PCs to a wired network, and are used in the preferred embodiment when the network backbone is some form of wired cable or fiber optics. The NIC provides a physical connection between the networking cable and the computer's internal bus. Different computers have different bus architectures; the most common are PCO found on 486/Pentium PCs and ISA expansion slots commonly found on 386 and older PCs. NICs come in three basic varieties: 8-bit, 16-bit, and 32-bit. The larger the number of bits that can be transferred to the NIC, the faster the NIC can transfer data to the network cable. Many NIC adapters comply with Plug-n-Play specifications. On these systems, NICs are automatically configured without user intervention, while on non-Plug-n-Play systems, configuration is done manually through a setup program and/or DIP switches. Cards are available to support almost all networking standards, including the latest Fast Ethernet environment. Fast Ethernet NICs are often 10/100 capable, and will automatically set to the appropriate speed. Full duplex networking is another option, where a dedicated connection to a switch allows a NIC to operate at twice the speed. NIC cards with multiple terminations capable of supporting multiple physical layer protocols or within protocol types are to be preferred. Within the NIC cards are transceivers used to connect nodes to the various Ethernet media. Most computers and network interface cards contain a built-in 10BASE-T or 10BASE2 transceiver, allowing them to be connected directly to Ethernet without requiring an external transceiver. Many Ethernet devices provide an AUI connector to allow the user to connect to any media type via an external transceiver. The AUI connector consists of a 15-pin D-shell type connector, female on the computer side, male on the transceiver side Thickwire (10BASE5) cables also use transceivers to allow connections. For Fast Ethernet networks, a new interface called the MIII (Media Independent Interface) was developed to offer a flexible way to support 100 Mbps connections. The MII is a popular way to connect 100BASE-FX links to copper-based Fast Ethernet devices. Wireless backbone physical layer network connections are made using RF network receivers made by companies such as Linksys, Cisco, IBM, DLINK and others, using wireless protocols such as 802.11X, UWB (ultra wideband), Bluetooth, and more as the network interface **101**.

The network speaker controller **120** is an embedded controller with flash memory programmed to function as a web server. The network speaker controller **120** and the audio format converter **121** are enabled to allow their application programming to be updated over the network, the network speaker can be made to play currently unknown digital formats in the future. The audio sources received from the network most likely will be in an encoded and/or compressed format. Digital audio coding or digital audio compression is the art of minimizing storage space (or channel bandwidth) requirements for audio data. Modern perceptual audio coding protocols, synonymously called digital audio compression techniques, like MPEG Layer-III or MPEG-2 AAC, ATRACK3, WMA, Ogg Vorbis, or "Corona", and even a packet switched Dolby Digital (AC3 over Ipv6), exploit the properties of the human ear (the perception of sound) to achieve a respectable size reduction with lithe or no perceptible loss of quality. This compression is usually more than just reducing the sampling rate and the resolution of your samples. Basically; this is realized by perceptual coding techniques addressing the perception of sound waves by the human ear, which remove the redundant and irrelevant parts of the sound signal. The sensitivity of the human auditory systems for audio signals varies in the frequency domain being high for frequencies between 2.5 and 5 kHz and

decreasing beyond and below that frequency band. The sensitivity is represented by the Threshold In Quiet so that any tone below the threshold will not be perceived. The most important psychoacoustics fact is the masking effect of spectral sound elements in an audio signal like tones and noise. For every tone in the audio signal a masking threshold can be calculated. If another tone lies below this masking threshold, it will be masked by the louder tone and remains inaudible, too. These inaudible elements of an audio signal are irrelevant for the human perception and thus can be eliminated by the encoder. The result after encoding and decoding is different from the original, but it will sound more or less the same to the human ear. How closely it would sound to the original depends on how much compression had been performed on it.

Audio compression really consists of two parts. The first part, called encoding, transforms the digital audio data that resides, say, in a WAVE file, into a highly compressed form called bitstream (or coded audio data). To play the bitstream on your soundcard, you need the second part, called decoding. Decoding takes the bitstream and reconstructs it to a WAVE file. Highest coding efficiency is achieved with algorithms exploiting signal redundancies and irrelevancies in the frequency domain based on a model of the human auditory system. Current coders use the same basic structure. The coding scheme can be described as "perceptual noise shaping" or "perceptual sub-band/transform coding". The encoder analyzes the spectral components of the audio signal by calculating a filterbank (transform) and applies a psychoacoustics model to estimate the just noticeable noise-level. In its quantization and coding stage, the encoder tries to allocate the available number of data bits in a way to meet both the bit rate and masking requirements. The decoder is much less complex. Its only task is to synthesize an audio signal out of the coded spectral components.

The term psychoacoustics describes the characteristics of the human auditory system on which modern audio coding technology is based providing audio quality of a coded and decoded audio signal the quality of the psychoacoustics model used by an audio encoder is of prime importance. Audio data decompression and de-coding of audio formats into the audio format acceptable the loudspeaker is performed by the audio format converter **121**. This audio format conversion of different formats allows high quality low bit-rate applications, like soundtracks for CD-ROM game, solid-state sound memories, Internet audio, or digital audio broadcasting systems to all be played over the same speaker. The audio format converter **121** function in the current embodiment of the networked speaker will be performed by an audio coding and decoding chip set (CODEC). CODEC hardware and or software is currently available from such companies as Micronas, Sigmatel, TI, Cirrus, Motorola, Fraunhofer, and Microsoft. CODECs handle the many current encoding protocols such as WMA, MPEG-2 AAC, MP3 (MPEG Layer III), MPSPro, G2, ATRACK3, MP3PRO, "Corona", (WMAPro) Ogg-Vorbis and others. To best perform the audio format conversion function, the CODEC should be designed to handle all types of audio content, from speech-only audio recorded with a low sampling rate to high-quality stereo music. The CODEC should be very resistant to degradation due to packet loss, and have an efficient encoding algorithms to perform fast encodes and decodes, and to minimize the size of the compressed audio files, and still produce quality sound when they are decoded. In addition, the CODEC should be highly scalable and provide high-quality mono or stereo audio content over a wide range of bandwidths, to allow selection of the best combination of bandwidth and sampling rate for the particular content being played or recorded. Content encoded at 192 Kbps by the CODEC should be virtually indistinguishable to a human ear from content originating on a compact disc. This extremely high-quality content is called CD transparency. A preferred embodiment of this invention uses the Windows Media Audio (WMA) Audio CODEC by Microsoft. The audio format converter **121** function could also be performed by a decoder chip with no encoder functionality if no digital audio reformatting or digital encoding of analog audio is desired.

The digital to analog converter **122**, converts a digital input into an analog level output. At the pre-amp **123**, the analog signal is adjusted and filtered, and any desired active or electronic crossover may be performed. An electric crossover is a powered electronic circuit which limits or divides frequencies. Most electronic crossovers have output controls for each individual channel. This allows you to set the gains for all amplifiers at one convenient location, as well as the ability to level match a system. Some crossovers will allow you to set the low and high pass filters separately, which allows you to tune out acoustic peaks or valleys at or near the crossover frequencies. One of the advantages of electronic crossovers is that there is little or no insertion loss. Passive crossovers reduce the amplifier power slightly, due to their resistance. Another advantage of electronic crossovers is the ability to separate low frequencies into their own exclusive amplifier, which reduces distortion heard at high volumes in the high frequency speakers. Amplification of low frequencies requires greater power than higher frequencies. When an amplifier is at or near peak output, clipping may occur, which is able to destroy tweeters and other speakers with small voice coils. A separate low frequency amplifier allows the total system to play louder and with lower distortion. An adjustable crossover allows the user to make crossover changes easily and to immediately hear the effect of the changes. Changing the filters, or crossover points, lets users adjust the audio to meet their preferences. The electronic crossover, by limiting the frequencies to the amplifier or amplifiers connected to it, also ensures that the speakers which are connected to these amplifier(s) would therefore receive a limited frequency range, and these speakers can be optimized for the frequencies received. It also enables personal preferences in frequency range pre-amplification adjustment. The advantages of using active filters are that they are built onto the pre-amp circuit board. Changing the filters (or crossover points) is usually accomplished through external dial turning, by changing frequency modules with a switch or by changing crossovers if fixed types are used. An adjustable crossover is preferred.

The amplifier **125** is comprised of one or more amplifier circuits that amplify the audio signal to the desired final signal strength. Using multiple amplifiers takes advantage of the crossover frequency filtering to optimize the amplifier for the frequency range received. Amplifiers using the latest in digital amplifier technology that can efficiently produce large amounts of power with a much smaller heat sink than in past designs are preferable, and this also will eliminate the need for another DAC. The speaker/microphone driver **126** is comprised of one or more speaker drivers circuits. Using multiple drivers for multiple speakers allows the speakers to be optimized for the frequency range received. The speaker/microphone components **127** convert the signal to sound and are voiced and designed to handle a wide dynamic range of audio frequencies and are able to aid in the accurate reproduction of sound from a digital source.

FIG. **3** shows another network speaker embodiment **100**B. The speaker embodiment **100**B includes all of the components of the speaker embodiment **100**A and identical compo-

nents bear the same reference numerals. In addition, speaker embodiment includes an analog to digital converter (ADC) **128** and a modified speaker/microphone driver **126***b*. The speaker/microphone driver **126***b* circuitry is expanded to serve as both an output driver and a microphone input for half duplex operation (one way conversations), and an internal microphone can implement a full duplex operation (simultaneous two way conversations). The microphone input is sent to the pre-amp **123** for signal adjustment and filtering. From there it is sent to the analog to digital converter **128** to convert the analog signal to a simple digital format. The audio format converter **121** then takes the digital microphone input and compresses and encodes it into a desired format for distribution. The encoded format of which may vary, depending on the application is sent to the network controller **120** where, depending on the software application and programming, its final destination and function are determined. The input may be stored locally for future audio feedback, used locally, or it may be sent out to the network through the network interface **110**. The input could be used with a voice recognition application to initiate spoken audio or home control commands. Speaker sensors **124** feedback received by the pre-amp **123** can also be sent to the ADC **128** to be converted from analog to digital format, and then passed on to the network controller **120**. Depending on the network controller **120** applications, the feedback can then be sent out to network interface **110** onto the network backbone **200** as an alarm or other condition if desired. Additional features in the audio format converter **121** in conjunction with application software could enable the ability to change audio setting(s) based on the type of music that is being played, or even the user playing it, or Time of Day (TOD). The network speaker **100**B may have the ability, through the audio format converter **121** or other circuitry, to support headphones.

FIG. **4** depicts another network speaker embodiment **100**C with wireless remote control access. All components of speaker embodiment **100**B are present in speaker embodiment **100**C and bear the same reference numerals. In addition, additional components provide wireless remote control from IR and RF remotes. It should be noted that the additional components could have been added to the network speaker embodiment **100**A as well. An internal IR sensor **131** senses IR from one or more external IR remotes **170**. The sensed IR is sent to an IR receiver **130** that processed the IR input, and the processed IR input is sent to the network controller **120** which then performs commands as per its application software. If desired, the IR sensor **131** may be external of the speaker **100**C which then can be installed behind a wall as wall speakers, and still receive IR. The network controller **120** can send the processed IR commands out the network interface **110** onto the network to be processed remotely by the Legacy Converter/Controller **600** which then translates them into commands to the legacy sources **500**. Alternatively, the network controller **120** can send the processed IR commands out the network interface **110** onto the network to be processed remotely by the legacy Converter/Controller **60** which then translates them into Legacy home control network **700** commands. In the same manner, RF control access is provided by a RF Sensor/Transceiver **135** which receives input from RF remotes **175** and other network speaker transceivers, and transmits information to the network controller **120**. While this embodiment **100**C shows both IR and RF access through the same network speaker, it will be appreciated that IR only control access or RF only control access could be implemented.

The wireless control access allow IR or RF input to the speakers **100**C to be used to remotely control the system **20** including control of the audio, (including multi destination sync), video, HVAC, security, room light level house scenes, etc., if the system is so programmed. Where the software application includes the ability to "learn" new IR commands and associate them with audio or house control commands, existing legacy sources with IR remotes can be integrated into the network controller through the legacy Converter/Controller **600**. And because the legacy Converter/Controller **600** is upgradeable over the network, the network speaker IR input ability could be made to control currently unknown system devices in the future.

FIG. **5** shows another network speaker embodiment **100**D that serves as bridge between one or more wireless network devices and a wired segment of the network **200**, known as a wireless access point. This wireless access point embodiment includes the components of embodiment **100**B with additional components added for wireless-wired bridging, such as dual mode ad-hoc to infrastructure mode. The network **200** consists of at least one physically wired network section **240** and at least wireless network segment **250**. The network interface **110** consists of two parts, a wired network interface **111** connecting the network speaker **100**D to the wired network backbone **240** and an RF network interface **112** connecting the network speaker **100**D to the wireless RF network backbone **250**. Network communication can pass between the wired backbone **240** and the wireless RF network backbone **250** via the network speaker **100**D. The RF network interface **112** consists of an RF receiver/transmitter capable of both receiving and sending RF network communication.

FIG. **6** illustrates another speaker embodiment **100**E that has wireless control access and that serves as a wireless access point. This wireless access point embodiment includes all of the components of embodiments of **100**B, **100**C and **100**D.

If a home has a network speaker type system, the application software opens all kinds of possibilities. New sources or new source content may enable these intelligent speakers **100** to have more features and playback formats that are not in existence today, and to adjust to the source content. An example of this would be the ability to change audio settings based on the type of music that is being played, or even the user playing it, or Time of Day (TOC). This will be highly customizable long past the time of installation, to keep the audio system upgradeable without structural changes to the home even if the network speakers are embedded in walls and other not easily accessed locations. In addition, a network speaker **100** with a microphone and the appropriate application software could record and route messages digitally to any house network node or internet node; locate and identify a user in a room, which in turn enables the system **20** to route voice mail and message to the room the user is presently in on demand; locate and identify a room user, which in turn enables the system to route voice mail and message to the room the user is presently in on demand; serve as a voice recognition and authorization point to enable direct voice control of any node on the network or any legacy audio source **500** or legacy control network **700** device that may be connected to the network **200** through a legacy converter/controller **600**; or to automatically record and/or route voice messages from one user to the room in which the recipient identified in the voice message is currently located. Multiple network speakers **100** with microphones in one room could even triangulate the location of the user, which in turn enables the system to optimize the audio for the users current location.

The network speaker **100** with a sufficient memory and the appropriate application software could store voice mail to be played on demand by the room user or in a totally wireless

network **200** serve as a wireless repeater within a home if the wireless communication medium signal strength was insufficient to reach all rooms or areas of the home from all locations. Also, a strategically placed network speaker **100** serving as a wireless access point allows the communication of audio, data, commands or any other communications from mobile network nodes whenever they are within communication range, such as PDAs, mobile controllers, mobile computers, wireless headphones, or network speakers **100** in mobile units such as automobiles.

A network speaker **100** with IR or RF receivers and the appropriate application software would allow wireless remote control, status and feedback from any IR or RF remote, or other network speaker transceiver, to any node on the network or any legacy audio source **500** or legacy control network **700** device that may be connected to the network **200** through a legacy converter/controller **600**. A network speaker **100** with a RF receiver capable of transmitting RF could enable wireless non-networked headphones. Also, a network speaker **100** could encode and send and transmit sound and images from a room out on the network, as well as act as the source point for room control and automation and voice recognition services for control and automation. In addition, a network speaker **100** could participate in a multi speaker session during which each network speaker **100** could perform as a master or slave mode. A network speaker **100** in the master mode would control and distribute multi session clocks and this is where they would originate and be calculated. The network speaker **100** in the slave mode would receive via TCP/IP and/or RF clocking information from the master in a multi session mode.

A network speaker **100** additionally could be an audio source locally within the room via internal solid-state memory as well as terrestrial analog reception (AM/FM/CATV) if components were added to receive and play back digital and analog terrestrial radio frequencies (AM/FM/CATV).

FIG. **7** is a block diagram that shows a baffle microphone **124** and a tuner **162** coupled to a DSP (digital signal processor) **160**. This figure illustrates that DSP **160** (also described as a signal processor means elsewhere in the original disclosure) is an alternative embodiment to the use of one or more of the following components that include a separate Audio Format Converter **121**, an ADC **128**, a DAC **122**, a Pre-Amp **123**, and an Amplifier **125** as illustrated in FIGS. **1-6** and **8-10**. The DSP **160** may include a real time adaptive analyzer to process information. DSP **160** may also include a speaker controller for providing intelligence to operate application protocol.

FIG. **8** depicts a legacy Audio Converter/Controller **600** embodiment, which includes many similar components as the Network Speaker **100**. The legacy Audio Converter/Controller **600** communicates with the network backbone (Ethernet) **200** through a network interface **610** which handles the physical layer hardware protocol and may connect to one or more physical layers, wired or unwired or both. Coupled to the network interface **610** is a Network Controller **620** which provides the intelligence to run various application features of the legacy Audio Converter/Controller **600**, including the higher levels of the TCP/IP protocol. The Network Controller **620** controls an audio format converter **621** which converts the legacy source audio into the desired network digital format for distribution. Digital audio from legacy sources **500** are transmitted directly to the audio format converter **621** to be re-formatted into the desired digital format. Analog audio from legacy sources **500** are fed to an analog to digital converter ("ADC") **622**, and the resultant digitized signal then goes to the audio format converter **621** to be coded into the desired digital format. The Network Controller **620** takes the properly formatted digital audio and sends it to the network **200** via the network interface **610**. Also, the audio format converter **621** may consist of multiple encoders to provide multiple conversions of different legacy audio inputs simultaneously. The Legacy Converter/Controller **600** uses the analog video from the legacy source device for encoding to a packet switched digital format such as WMAPro "Corona", and also uses the analog video inputs for power status and feedback.

The network interface **610** may vary depending on the physical medium and physical layer protocol used. Network interface cards, commonly referred to as NICs, are often used to connect a PC to a wired network, and are used in the preferred embodiment when the network backbone is some form of wired cable or fiber optics. Such a NIC provides a physical connection between the networking cable and the computer's internal bus. Different computers have different bus architectures; the most common are PCI found on 486/Pentium PCs and ISA expansion slots commonly found on 386 and older PCs. Typically NICs come in three basic varieties: 8-bit, 16-bit, and 32-bit. The larger the number of bits that can be transferred to the NIC, the faster the NIC can transfer data to the network cable. Many NIC adapters comply with Plug-n-Play specifications. On these systems, NICs are automatically configured without user intervention, while on non-Plug-n-Play systems, configuration is done manually through a setup program and/or DIP switches. Cards are available to support almost all networking standards, including the latest Fast Ethernet environment. Fast Ethernet NICs are often 10/100 capable, and will automatically set to the appropriate speed. Full duplex networking is another option, where a dedicated connection to a switch allows a NIC to operate at twice the speed. NIC cards with multiple terminations capable of supporting multiple physical layer protocols or within protocol types are preferred so that the NIC cards include transceivers used to connect nodes to the various Ethernet media. Most computers and network interface cards contain a built-in 10BASE-T or 10BASE2 transceiver, allowing them to be connected directly to Ethernet without requiring an external transceiver. Many Ethernet devices provide an AUI connector to allow the user to connect to any media type via an external transceiver. The AUI connector consists of a 15-pin D-shell type connector, female on the computer side, male on the transceiver side. Thickwire (10BASE5) cables also use transceivers to allow connections. For Fast Ethernet networks, a new interface called the MII (Media Independent Interface) was developed to offer a flexible way to support 100 Mbps connections. The MII is a popular way to connect 100BASE-FX links to copper-based Fast Ethernet devices. Wireless backbone physical layer network connections are made using RF network receivers made by companies such as Linksys, Cisco, IBM, DLINK, and others, using wireless protocols such as 802.11X, UWB, Bluetooth, and more as the network interface **610**.

The network speaker controller **620** is an embedded controller with flash memory programmed to function as a web server and enabled with the audio format converter **621** to allow their application programming to be updated over the network, the legacy Audio Converter/Controller **600** can be made to code audio to currently unknown digital formats in the future. As in the speaker embodiments described above, the desired audio to be distributed will likely be in a coded and/or compressed format. Digital audio coding or digital audio compression is the art of minimizing storage space (or channel bandwidth) requirements for audio data. Modern

perceptual audio coding protocols, synonymously called digital audio compression techniques, like MPEG Layer-III or MPEG-2 AAC, ATRACK3, G2, WMA, Ogg Vorbis, or WMAPro, "Corona", exploit the properties of the human ear (the perception of sound) to achieve a respectable size reduction with little or no perceptible loss of quality. As described above, this compression, in addition to reducing the sampling rate and the resolution of the audio samples employees perceptual coding techniques addressing the perception of sound waves by the human ear, that remove the redundant and irrelevant parts of the sound signal. The sensitivity of the human auditory systems for audio signals varies in the frequency domain being high for frequencies between 2.5 and 5 kHz and decreasing beyond and below this frequency band. The sensitivity is represented by the Threshold In Quiet Any tone below this threshold will not be perceived. The most important psychoacoustics fact is the masking effect of spectral sound elements in an audio signal like tones and noise. For every tone in the audio signal a masking threshold can be calculated. If another tone lies below this masking threshold, it will be masked by the louder tone and remains inaudible too. These inaudible elements of an audio signal are irrelevant for the human perception and thus can be eliminated by the coder. The sound resulting after coding and decoding is different, but will be perceived more or less the same by the human ear. How closely it would sound to the original depends on how much compression had been performed.

Audio compression actually consists of two parts. The first part, called coding or encoding, transforms the digital audio data that resides, say, in a WAVE file, into a highly compressed form called bitstream (or coded audio data). To play the bitstream on your soundcard, you need the second part, called decoding. Decoding takes the bitstream and reconstructs it to a WAVE file. Highest coding efficiency is achieved with algorithms exploiting signal redundancies and irrelevancies in the frequency domain based on a model of the human auditory system. Current coders use the same basic structure to produce coding that can be described as "perceptual noise shaping" or "perceptual sub-band/transform coding". The encoder analyzes the spectral components of the audio signal by calculating a filterbank (transform) and applies a psychoacoustics model to estimate the just noticeable noise-level. In its quantization and coding stage, the encoder tries to allocate the available number of data bits in a way to meet both the bit rate and masking requirements. The decoder is much less complex. Its only task is to synthesize an audio signal out of the coded spectral components. Psychoacoustics describes the characteristics of the human auditory system on which modern audio coding technology is based. For the audio quality of a coded and decoded audio signal the quality of the psychoacoustics model used by an audio encoder is of prime importance.

The audio format converter **621** performs audio data compression and encoding of audio formats into the audio format acceptable for distribution to the end receiver on the network and can consist of an audio encoder-decoder chip (CODEC). To best perform the audio format conversion function, the CODEC should be designed to handle all types of audio content, from speech-only audio recorded with a low sampling rate to high-quality stereo music. The CODEC should be very resistant to degradation due to packet loss, and have efficient encoding algorithms to perform fast encodes and decodes, and to minimize the size of the compressed audio files, and still produce quality sound when they are decoded. Also, the CODEC should be highly scalable and provide high-quality mono or stereo audio content over a wide range of bandwidths, to allow selection of the best combination of bandwidth and sampling rate for the particular content being played or recorded. Content encoded at 192 Kbps by the CODEC should be virtually indistinguishable to a human ear from content originating on a compact disc. This extremely high-quality content is called CD transparency.

The analog to digital converter **622**, commonly referred to as an ADC, converts an analog level input to a digital output. Adding a microphone speaker input to the ADC will enable voice control of the legacy Audio Converter/Controller **600**. It would also enable the legacy Audio Converter/Controller **600** to record audio input for later use as system messages or audio feedback. Depending on the software application and programming in the network controller **620**, the audio input may be stored locally for future audio feedback, used locally, or it may be fed out to the network through the network interface **610**. The audio input could be used with a voice recognition application to initiate spoken audio or home control commands.

The Legacy Audio Converter/Controller **600** may also communicate with the legacy sources **500** using a legacy communication method, such as IR or serial commands, that are understood by the legacy device. The planned embodiment of the invention will use the fixed set of serial commands already understood by the target legacy source. The network controller **620** controls and communicates with a legacy controller **624**, which also communicates with the legacy source **500** through a legacy audio network interface **623**. In a preferred embodiment of the invention, a RS-232 serial command interface will be used. The functions of the network controller **620** and the legacy controller can be combined into one embedded controller.

The Legacy Audio converter/Controller **600** may also communicate with the legacy home control network **700** using the network communication method understood and practiced by the legacy home control network **700** and such communication may vary greatly depending on the legacy home control network **700** being used. A preferred embodiment of the invention will use the CEBus powerline protocol for its communication method. The legacy controller **624** controls and communicates via a legacy home control network interface **625**, with a legacy home control network **700**. The functions of the legacy controller in controlling the legacy sources **500** and the legacy home control network **700** and the legacy controller could be separated out into two separate embedded controllers, or combined with the network controller **620**. If no legacy source **500** is available, the legacy audio network interface **623** and the legacy source control function of the legacy controller **624** may be eliminated. Similarly, in the absence of a legacy home control network **700**, the legacy home control network interface **625** and the legacy home network control function of the legacy controller **624** may be eliminated.

As illustrated in FIG. **9** network speaker **100**F can receive DC current from external regulated power supplies over existing 14-18 AWG speaker wire or can employ PoE (Power over Ethernet) technology to trickle charge the battery. Also, charge status can be provided for the battery **800**.

Network speaker **100**F has power applied as DC current from a rechargeable battery source **800** either located within the speaker or inserted into the speaker as a removable battery pack. This would also allow for line power status, which would perform a function specific to the application once this condition occurs.

FIG. **10** depicts another speaker embodiment **100**G which also can be battery powered. In addition, the speaker **100**G includes an ESM (Energy Storage Module) which improves audio performance.

Obviously, many modifications and variations of the present invention are possible in light of the above teachings. It is to be understood, therefore, that the invention can be practiced otherwise than as specifically described.

The invention claimed is:

1. A local area network (LAN) audio system comprising:

a networked audio source node device connected to a plurality of network speaker nodes via a TCP/IP LAN network, wherein an individual network speaker node further comprises:

a first network controller that controls the processing of the first digital audio signal to and from said LAN network, said first network controller further comprises an embedded controller with memory and which is programmed to function as a web server;

a first network interface that couples said first network controller to said LAN network;

a first audio format converter that couples to said first network controller and converts and formats the first digital audio signal, said first audio format converter is updated through said LAN network;

a digital to analog converter (DAC) that couples to said first audio format converter and converts the first digital audio signal to the first analog audio signal;

a pre-amplifier that couples to said DAC and adjusts and filters the first analog audio signal and an amplifier that couples to said pre-amplifier and amplifies the first analog audio signal, said pre-amplifier further comprises an electronic crossover for frequency division; and

speaker sensors that couple to said pre-amplifier and provide feed back that enables internal auto adjustment by frequency separation to enhance speaker protection and performance and allow for sending control signals back to other devices in said LAN network;

an internet interface connected to said network speaker nodes via said LAN network;

a network control server connected to said network speaker nodes via said LAN network; and

a legacy converter and controller connected to said LAN network, said legacy converter and controller connects one or more legacy sources and a legacy control network to said LAN network, said legacy converter and controller further comprises:

a second network controller that controls the processing of the second digital audio signal to and from said LAN network, said second network controller further comprises an embedded controller with memory and which is programmed to function as a web server;

a second network interface that couples said second network controller to said LAN network;

a second audio format converter that couples to said second network controller and converts and formats the second digital audio signal and receives legacy digital audio from legacy sources, said second audio format converter is updated through said LAN network;

an analog to digital converter (ADC) that couples to said second audio format converter and converts the legacy analog audio signal to the second digital audio signal; and

a legacy controller that couples to said second network controller and controls and communicates with said legacy sources and or said legacy control network;

a legacy audio network interface that couples said legacy sources to said legacy controller; and

a legacy control network interface that couples said legacy control network to said legacy controller.

2. The claim according to claim **1** wherein each said network speaker node through said web server renders audio media content and distributes, controls, and serves media content to other devices on said LAN network.

3. The claim according to claim **1** wherein said LAN network comprises a wired section and one or more wireless segments, and one or more of said network speaker nodes comprises interface means providing a communication bridge between said wire section and said one or more wireless segments.

4. The claim according to claim **3** wherein said interface means comprises an RF receiver/transmitter capable of both receiving and sending RF network communication.

5. The claim according to claim **1** wherein said network speaker nodes are adapted to participate in multi speaker sessions to establish a master speaker node and slave speaker nodes which would receive clocking control information from said master speaker node.

6. A method to make a local area network (LAN) audio system, comprising:

providing a networked audio source node device coupled to a plurality of network speaker nodes via a TCP/IP LAN network; wherein an individual network speaker node further comprises:

a first network controller that controls the processing of the first digital audio signal to and from said LAN network, said first network controller further comprises an embedded controller with memory and which is programmed to function as a web server;

a first network interface that couples said first network controller to said LAN network;

a first audio format converter that couples to said first network controller and converts and formats the first digital audio signal, said first audio format converter is updated through said LAN network;

a digital to analog converter (DAC) that couples to said first audio format converter and converts the first digital audio signal to the first analog audio signal;

a pre-amplifier that couples to said DAC and adjusts and filters the first analog audio signal and an amplifier that couples to said pre-amplifier and amplifies the first analog audio signal, said pre-amplifier further comprises an electronic crossover for frequency division; and

speaker sensors that couple to said pre-amplifier and provide feed back that enables internal auto adjustment by frequency separation to enhance speaker protection and performance and allow for sending control signals back to other devices in said LAN network;

coupling an internet interface to said network speaker nodes via LAN said network;

coupling a network control server to said network speaker nodes via said LAN network; and

coupling a legacy converter and controller to said LAN network, said legacy converter and controller couples one or more legacy sources and a legacy control network to said LAN network, said legacy converter and controller further comprises:

a second network controller that controls the processing of the second digital audio signal to and from said LAN network, said second network controller further comprises an embedded controller with memory and which is programmed to function as a web server;

a second network interface that couples said second network controller to said LAN network;

a second audio format converter that couples to said second network controller and converts and formats the second digital audio signal and receives legacy digital audio from legacy sources, said second audio format converter is updated through said LAN network;

an analog to digital converter (ADC) that couples to said second audio format converter and converts the legacy analog audio signal to the second digital audio signal; and

a legacy controller that couples to said second network controller and controls and communicates with said legacy sources and or said legacy control network;

a legacy audio network interface that couples said legacy sources to said legacy controller; and

a legacy control network interface that couples said legacy control network to said legacy controller.

7. The claim according to claim **6** wherein each said network speaker node through said web server renders audio media content and distributes, controls, and serves media content to other devices on said LAN network.

8. The claim according to claim **6** wherein said LAN network comprises a wired section and one or more wireless segments.

9. The claim according to claim **8** further comprising an RF receiver/transmitter capable of both receiving and sending RF network communication.

10. The claim according to claim **6** wherein said network speaker nodes are adapted to participate in multi speaker sessions to establish a master speaker node and slave speaker nodes which would receive clocking control information from said master speaker node.

11. A method to use a local area network (LAN) audio system, comprising:

using a TCP/IP LAN network to couple a networked audio source node device to a plurality of network speaker nodes, wherein an individual network speaker node further comprises:

a first network controller that controls the processing of the first digital audio signal to and from said LAN network, said first network controller further comprises an embedded controller with memory and which is programmed to function as a web server;

a first network interface that couples said first network controller to the said LAN network;

a first audio format converter that couples to said first network controller and converts and formats the first digital audio signal, said first audio format converter is updated through said LAN network;

a digital to analog converter (DAC) that couples to said first audio format converter and converts the first digital audio signal to the first analog audio signal;

a pre-amplifier that couples to said DAC and adjusts and filters the first analog audio signal and an amplifier that couples to said pre-amplifier and amplifies the first analog audio signal, said pre-amplifier further comprises an electronic crossover for frequency division; and

speaker sensors that couple to said pre-amplifier and provide feed back that enables internal auto adjustment by frequency separation to enhance speaker protection and performance and allow for sending control signals back to other devices in said LAN network;

using said LAN network to couple an internet interface to said network speaker nodes;

using said LAN network to couple a network control server to said network speaker nodes; and

coupling a legacy converter and controller to said LAN network, said legacy converter and controller couples one or more legacy sources and a legacy control network to said LAN network, said legacy converter and controller further comprises:

a second network controller that controls the processing of the second digital audio signal to and from said LAN network, said second network controller further comprises an embedded controller with memory and which is programmed to function as a web server;

a second network interface that couples said second network controller to said LAN network;

a second audio format converter that couples to said second network controller and converts and formats the second digital audio signal and receives legacy digital audio from legacy sources, said second audio format converter is updated through said LAN network;

an analog to digital converter (ADC) that couples to said second audio format converter and converts the legacy analog audio signal to the second digital audio signal; and

a legacy controller that couples to said second network controller and controls and communicates said legacy sources and or said legacy control network;

a legacy audio network interface that couples said legacy sources to said legacy controller; and

a legacy control network interface that couples said legacy control network to said legacy controller.

12. The claim according to claim **11** wherein each said network speaker node through said web server renders audio media content and distributes, controls, and serves media content to other devices on said LAN network.

13. The claim according to claim **11** wherein said LAN network comprises a wired section and one or more wireless segments.

14. The claim according to claim **13** further comprising an RF receiver/transmitter capable of both receiving and sending RF network communication.

15. The claim according to claim **11** wherein said network speaker nodes are adapted to participate in multi speaker sessions to establish a master speaker node and slave speaker nodes which would receive clocking control information from said master speaker node.

16. A program storage device readable by a programmable device that tangibly embodies a program of instructions executable by the programmable device to perform a method to use a local area network (LAN) audio system, comprising:

using a TCP/IP LAN network to couple a networked audio source node device to a plurality of network speaker nodes, wherein an individual network speaker node further comprises:

a first network controller that controls the processing of the first digital audio signal to and from said LAN network, said first network controller further comprises an embedded controller with memory and which is programmed to function as a web server;

a first network interface that couples said first network controller to the said LAN network;

a first audio format converter that couples to said first network controller and converts and formats the first digital audio signal, said first audio format converter is updated through said LAN network;

a digital to analog converter (DAC) that couples to said first audio format converter and converts the first digital audio signal to the first analog audio signal;

a pre-amplifier that couples to said DAC and adjusts and filters the first analog audio signal and an amplifier that couples to said pre-amplifier and amplifies the first analog audio signal, said pre-amplifier further comprises an electronic crossover for frequency division; and

speaker sensors that couple to said pre-amplifier and provide feed back that enables internal auto adjustment by frequency separation to enhance speaker protection and performance and allow for sending control signals back to other devices in said LAN network;

using said LAN network to couple an internet interface to said network speaker nodes;

using said LAN network to couple a network control server to said network speaker nodes; and

coupling a legacy converter and controller to said LAN network, said legacy converter and controller couples one or more legacy sources and a legacy control network to said LAN network, said legacy converter and controller further comprises:

a second network controller that controls the processing of the second digital audio signal to and from said LAN network, said second network controller further comprises an embedded controller with memory and which is programmed to function as a web server;

a second network interface that couples said second network controller to said LAN network;

a second audio format converter that couples to said second network controller and converts and formats the second digital audio signal and receives legacy digital audio from legacy sources, said second audio format converter is updated through said LAN network;

an analog to digital converter (ADC) that couples to said second audio format converter and converts the legacy analog audio signal to the second digital audio signal; and

a legacy controller that couples to said second network controller and controls and communicates said legacy sources and or said legacy control network;

a legacy audio network interface that couples said legacy sources to said legacy controller; and

a legacy control network interface that couples said legacy control network to said legacy controller.

17. The claim according to claim **16** wherein each said network speaker node through said web server renders audio media content and distributes, controls, and serves media content to other devices on said LAN network.

18. The claim according to claim **16** wherein said LAN network comprises a wired section and one or more wireless segments.

19. The claim according to claim **16** further comprising an RF receiver/transmitter capable of both receiving and sending RF network communication.

20. The claim according to claim **16** wherein said network speaker nodes are adapted to participate in multi speaker sessions to establish a master speaker node and slave speaker nodes which would receive clocking control information from said master speaker node.

* * * * *

UNITED STATES PATENT AND TRADEMARK OFFICE

CERTIFICATE OF CORRECTION

PATENT NO. : 7,643,894 B2
APPLICATION NO. : 10/513737
DATED : January 5, 2010
INVENTOR(S) : Michael Braithwaite et al.

It is certified that error appears in the above-identified patent and that said Letters Patent is hereby corrected as shown below:

In column 6, line 34, delete "MIII" and insert -- MII --, therefor.

Signed and Sealed this

Twenty-third Day of March, 2010

David J. Kappos

David J. Kappos
Director of the United States Patent and Trademark Office