Exhibit 715-B: Additional References

To the extent any reference charted in Exhibits 715-01 through 715-09 is found not to disclose any limitation, such a limitation would have been obvious alone based on the state of the art or in combination with one or more of the references cited in 715-01 through 715-09 because the ’715 patent is merely a collection of prior art elements that fails to meet the statutory requirement of non-obviousness under § 103, and the factors delineated in *KSR Int’l Co. v. Teleflex, Inc.*, 550 U.S. 398 (2007) weigh against a finding of non-obviousness.

In particular, any disclosures identified for each limitation of the ’715 patent in the aforementioned Exhibits may be combined with the disclosure identified below for the same limitation. A POSITA would have found such a combination/modification obvious for the reasons discussed herein and in Defendant’s cover pleading.

The citations to portions of any reference in this chart are exemplary only. Citations to the written description should be interpreted to include the figures associated with or relevant to the cited passages. Similarly, citations to a figure should be understood to encompass any description, text, or discussion of that figure. Defendant reserves the right to use the entirety of any reference cited in this chart to show that the asserted claims are anticipated and/or are obvious. Citations presented for one claim limitation are expressly incorporated by reference into all other limitations for that claim as well as all limitations of all claims on which that claim depends.

Exemplary Disclosures
7[pre] A first zone player comprising:
The disclosures listed under claim element 7[pre] in Exhibits 715-01 through 715-09 demonstrate that the limitation was known and a POSITA would have been motivated to incorporate it into an existing audio system. Defendant incorporates by reference each of those disclosures here. The references discussed below further demonstrate that this limitation was an obvious modification and provide rationales for making the modification. <u>US20040114607 ("Shay")</u> "Method and Apparatus for delivering audio signals from a source node to a destination node on a network. The apparatus uses a number of switches that transmit prioritized data on a packet network. The switches are coupled to a number of send/receive nodes for sending and receiving digital audio signals on the data network. The audio packet size and the receive buffers are sized to store a minimum possible number of audio samples to minimize latency in processing audio signals arriving at said receive node, but still ensure audio delivery without interruption due to packet data network delay. An additional feature of the invention is recovery of clock synchronization over the same data network by novel arrangement of transmission of timing packets on the network. By sending a multiplicity of packets at irregular intervals a minimum network transit delay can be determined by each of the receive nodes which allows the receive nodes to filter out packet network transit delay error and maintain accurate local clocks." Shay at Abstract.   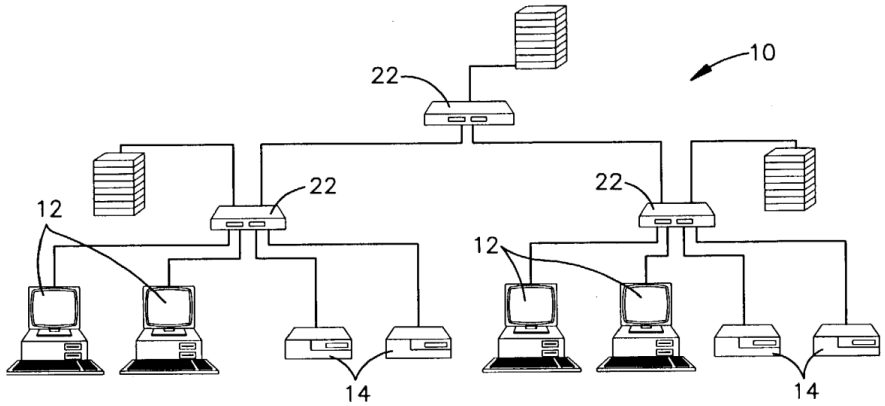   Fig.1 Shay at Fig. 1. "The present invention takes advantage of switched Ethernet to transmit audio by means of a network to multiple nodes on the network." Shay at [0019].

Exemplary Disclosures
A person of ordinary skill in the art would have found it obvious to use a first zone player, such as in an existing networking systems. It was routine at the time of the alleged invention to use zone players to play back audio, and a person of ordinary skill in the art would have been motivated to use a first zone player to play back audio. This was also a routine application for both home and broader networking systems at the time of the alleged invention, and a person of ordinary skill in the art would have been motivated to use a first zone player in a networking system in order to take advantage of the network and share data on the network. The references discussed in Respondents' invalidity charts for other prior art references for the '258 patent demonstrate that this limitation was an obvious modification and provide rationales for making the modification. <u>US7710941 ("Rietschel") (GOOG-SONOSITC-PA-00018781)</u> "A method for restitution of data flows or data packets transmitted over a network, using at least two restitution appliances that are at least indirectly connected to the network, for a synchronized and error-free restitution. To synchronize the restitution by the at least two restitution appliances, either one of the restitution appliances, as the master, provides its internal clock as the reference, and the other restitution appliances, as the slaves, coordinate their internal clock with that of the master by the network and restitute the data flows or data packets according to the coordinated clock, or the internal clock of an external appliance also available on the network is used as the master, and all restitution appliances, as the slaves, co-ordinate their internal clock with that of the master by the network, and restitute the data flows or data packets according to the coordinated clock." Rietschel at Abstract. "The transmission of digitally stored, multimedia data streams via a network infrastructure, the storage of these streams on computer-like equipment and their reproduction in professional applications and also in the home are already omnipresent. This is particularly so in the audio sector, since the data rates and volumes required for transmission and storage have been able to be severely reduced on account of effective compression methods (MP3). In the video sector, great efforts are being made by many to improve compression methods (MPEG-4) ever more in order to make the "online" availability and, by way of example, the real-time retrieval of feature films using an ordinary infrastructure (ADSL, wire modem and PC) a possibility in this case too. In the home, a very large market would develop if audio data could be output with very precise synchronization, without loss of quality, i.e. digitally with error correction, and in a form distributed using various media, but particularly by radio. Previously known methods (e.g. analog modulation of the data onto RF carriers without a reverse channel) are neither high in quality nor secure in operation. Reliable systems which, by way of example, can also distribute an S/PDIF (Sony/Philips Digital Interface, digital audio output) or analog audio signals reliably (i.e. with a reverse channel) using a wired or wireless infrastructure without noticeable loss of quality have not been available to date." Rietschel at 1:15-38. "The invention is accordingly based on the object of providing a method which allows data streams or data packets transmitted via at least one network to be reproduced in error-free and

Exemplary Disclosures
synchronized fashion using at least two reproduction units which are at least indirectly linked to the network." Rietschel at 1:42-46. "To achieve this object, the reproduction using the at least two reproduction units is synchronized either by virtue of one of the reproduction units, as master, prescribing its internal clock as reference and the other reproduction units, as slaves, aligning their internal clock with that of the master via the network and reproducing data streams or data packets on the basis of this aligned clock, or by virtue of the internal clock of an external unit which is likewise available on the network being used as master and all reproduction units, as slaves, aligning their internal clock with that of the master via the network and reproducing data streams or data packets on the basis of this aligned clock." Rietschel at 1:48-58.   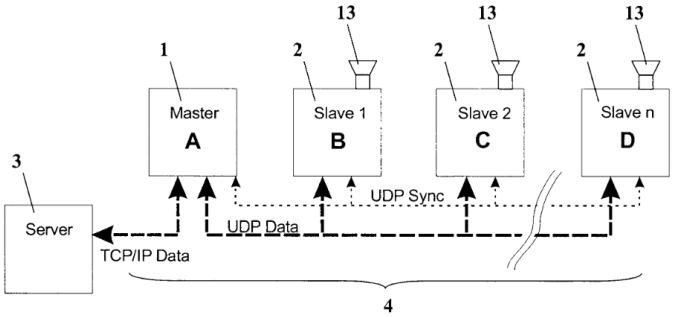   • "The server is a data source for audio data and may be any unit for providing the data. In this context, it may be a server belonging to a content provider, for example, or else a simple music or video server. In particular, a digital input circuit (e.g. S/PDIF), an analog/digital converter and/or a codec, which compresses/codes a data stream (typically a digital signal processor), may also be regarded as a "server". • Reproduction unit: a unit for reproducing the media stream which (unit) supports the protocols described here. • Master: a reproduction unit which has received from another unit a request to forward the data stream which is currently being played. • System: a set of at least two reproduction units which are installed in a common communication structure. • Slave: a station which has been requested by user interface or command or permanent setting/parameterization to play in sync with another reproduction unit ("master"). A plurality of slaves can play back the same data stream in sync. For this reason, the slaves are provided with numbers to identify them." Reitschel at 8:15-35. <u>US7392102 ("Sullivan") (GOOG-SONOSITC-PA-00020044)</u>

Exemplary Disclosures
"Referring generally now to FIGS. 1 through 10, exemplary embodiments of the present invention are shown. This invention describes a method of enabling simultaneous output of audio signals on multiple output devices by including time output information, pulse output signal information, and a user adjustable control to control the delay of signal between source and output systems. The method may be used to synchronize audio output on network output devices. The method may use a network clock synchronization method to sync the clocks of all the connected devices." Sullivan at 2:60-3:2. "FIG. 1 illustrates a system of several devices. Transmitting device PCA sends the audio stream, sync information, and time and other data to receiving devices PCn, such as PCB and PCC. Transmitting device PCA controls audio playback for the system. The audio signal is actually transmitted by audio source 5 to PCA and other devices PCn, such as PCB. The devices may be interconnected by a bus cabling or may communicate with one another through wireless communication such as radio frequency or infrared." Sullivan at 4:5-13. "The above process describes three separate roles for devices. However, a single device could take on any of the three roles described, i.e., it could be a receiver and the time reference, or the time reference and the audio transmitter, and the like. The process is a single time reference device (probably one of the receivers) first sets its own clock, then sets the clocks on all other receiving devices. Each receiver periodically adjusts itself for time drift. Keeping time synchronized on all receivers is its only responsibility. Each receiving device keeps the playback of the audio in sync with other devices by obtaining the exact time of the received pulse relative to its own (synchronized) clock, and then delaying the audio until the pulse exactly aligns with the next multiple of the pulse interval. For instance, if the pulse interval is once every 5 seconds, but the pulse appears 570 milliseconds prior to 2:15, the audio playback is delayed for 570 milliseconds. Note that the effect of this is that the playback on all devices is in sync, but always behind the transmission by approximately the pulse interval." Sullivan at 6:59-7:10.
7[a] one or more processors;
The disclosures listed under claim element 7[a] in Exhibits 715-01 through 715-09 demonstrate that the limitation was known and a POSITA would have been motivated to incorporate it into an existing audio system. Defendant incorporates by reference each of those disclosures here. The references discussed below further demonstrate that this limitation was an obvious modification and provide rationales for making the modification. <u>US20040114607 ("Shay")</u> "A packet filter 212 tests the data in each received packet of data to see if it belongs to one of the audio streams, or contains clock sync information, or not. If neither audio nor a clock packet, the packet either represents non-audio data for that node or is addressed to another node. If the packet contains non-audio data a node processor interprets that data in a conventional manner. The packet filter does this by comparing the destination address contained inside the data packet, with a list of destination addresses that the receiving terminal is programmed to accept. The list

Exemplary Disclosures
of accepted destination address numbers is programmed by a node processor 213 into the packet filter ahead of time depending on which audio channels from the network the user desires to come out of the outputs of this audio receive terminal. If the packet address does not match any of the accepted destination addresses on the list, no further action is taken on that packet and it is simply ignored. If the packet address does match an accepted address on the list, which address it matches determines the next step of processing the incoming packet." Shay at [0119]. "If the destination address matches the address for clock packets, then a time measurement of the local clock 214 is triggered, and the local time clock value along with the received clock packet contents is stored. This storage event notifies the software running on the node processor that a new clock packet has arrived. Software on the node processor reads the clock packet information and compares the local clock to the remote master clock by performing a histogram statistical clock filtering algorithm. The clock filtering algorithm may result in a decision to adjust the local clock to make this local clock 214 either faster or slower using a software implemented phase lock loop 216." Shay at [0121]. "The destination addresses are determined by the node processor software ahead of time and programmed into the packet generator, as the user configures how the audio channels are to be configured for routing." Shay at [0129]. <u>US7710941 ("Rietschel") (GOOG-SONOSITC-PA-00018781)</u> "The present invention also relates to a data processing program for carrying out a method, as is described above, and to a reproduction unit for carrying out such a method. In this context, the reproduction unit preferably has a network interface (or more generally a communication interface), a central computer unit with a memory, and means for at least indirectly outputting analog or digital data, particularly in the form of a loudspeaker. The memory of such a reproduction unit contains a permanently programmed data processing program for carrying out this method, and this program is activated automatically after the power supply is turned on, with the reproduction unit particularly preferably having means for automatically integrating the unit into the network." Rietschel at 7:38-49. "As an exemplary embodiment of the present invention, a system will be described in which a "transmission unit" distributes a continuous data stream delivered by a (digital or analog) audio data source wirelessly over a plurality of distributed reproduction units (typically active loudspeakers), with the latter decoding and outputting various channels of the same data stream. To this end, the transmitter unit has a CPU, i.e. a processor, buffer store, and at least one bidirectional communication interface, in the example described an 802.11b radio network interface, and an audio input for analog or digital audio data and also its own audio output (that is to say that it is also a reproduction unit). The other reproduction units use the same architecture, but instead of an audio input have a digital and/or analog audio output and possibly power amplifiers and sound transducers/loudspeakers 13." Rietschel at 7:66-8:13.

Exemplary Disclosures
US7392102 ("Sullivan") (GOOG-SONOSITC-PA-00020044) "An algorithm in hardware, software, or a combination of the two identifies the audio waveform sample in the audio stream." Sullivan at Abstract. Sullivan at Fig. 4:   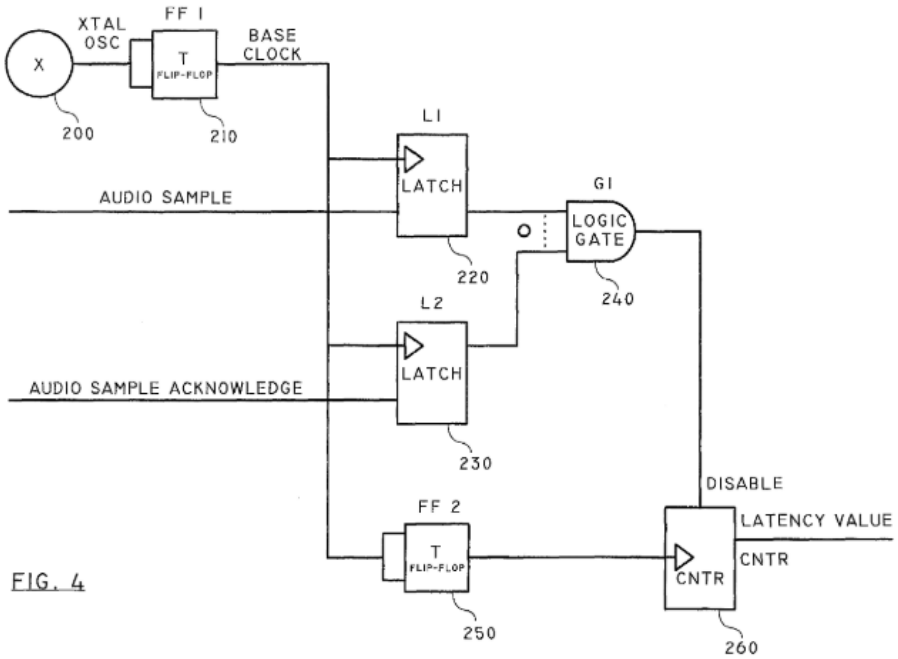   "A time drift detector is a simple process by which a device that is periodically receiving a time standard from the clock synchronizer checks for the amount that its own clock is drifting from the time standard, and compensates for it by periodically adding or subtracting from its own clock. It assumes that a device's system clock might drift, fast or slow, relative to the master device's clock, and that the rate of drift is constant. The time drift detector may be implemented in hardware, software, or a combination of hardware and software." Sullivan at 6:20-29. "In an exemplary embodiment, as shown in FIG. 6, the method includes the following steps. First, the clock synchronizer utilizes the latency detector (above) to determine the average amount of time it takes for a signal to travel from the reference computer or device (PCA) to another device (PCB). Second, PCA fetches its own time, adds the latency value to it and sends it to PCB. Third, PCB takes this time value and adds a known value representing the time it takes for the operating system (OS) to respond to a 'time set' command, and sets its own time accordingly." Sullivan at 5:66-6:8. *See also* Sullivan at 7:49-8:2.
7[b] at least one network interface; and

Exemplary Disclosures
The disclosures listed under claim element 7[b] in Exhibits 715-01 through 715-09 demonstrate that the limitation was known and a POSITA would have been motivated to incorporate it into an existing audio system. Defendant incorporates by reference each of those disclosures here. The references discussed below further demonstrate that this limitation was an obvious modification and provide rationales for making the modification. <u>US20040114607 ("Shay")</u> "Method and Apparatus for delivering audio signals from a source node to a destination node on a network. The apparatus uses a number of switches that transmit prioritized data on a packet network. The switches are coupled to a number of send/receive nodes for sending and receiving digital audio signals on the data network. The audio packet size and the receive buffers are sized to store a minimum possible number of audio samples to minimize latency in processing audio signals arriving at said receive node, but still ensure audio delivery without interruption due to packet data network delay. An additional feature of the invention is recovery of clock synchronization over the same data network by novel arrangement of transmission of timing packets on the network. By sending a multiplicity of packets at irregular intervals a minimum network transit delay can be determined by each of the receive nodes which allows the receive nodes to filter out packet network transit delay error and maintain accurate local clocks." Shay at Abstract. "The present invention concerns digital audio and more particularly a low latency means of transmitting digital audio signals over a network having multiple connections or nodes." Shay at [0002]. "The invention accomplishes reliability and low delay by: Tagging audio packets with a higher priority value than data so network interfaces and switches can distinguish them and put the audio packets at the head in their queues or buffers. This is done on a per-packet basis, not by assigning particular Ethernet switch ports permanently to high priority so that a link may pass both high-priority audio and lower-priority data." Shay at [0025]-[0026]. "FIG. 1 is schematic depiction of a general architecture design of a network 10 that is used at a facility having multiple computers 12 and other audio equipment 14. The network 10 uses a switched Ethernet network for delivering both audio and data to any node (such as one of the computers 12) on the network. A node need not include an entire computer but instead may simply be circuitry that includes a network interface circuit and an audio jack for plugging in a speaker, set of headphones, microphone or amplifier. FIG. 9 is a functional block diagram of a typical node on the network 10." Shay at [0040].

Exemplary Disclosures

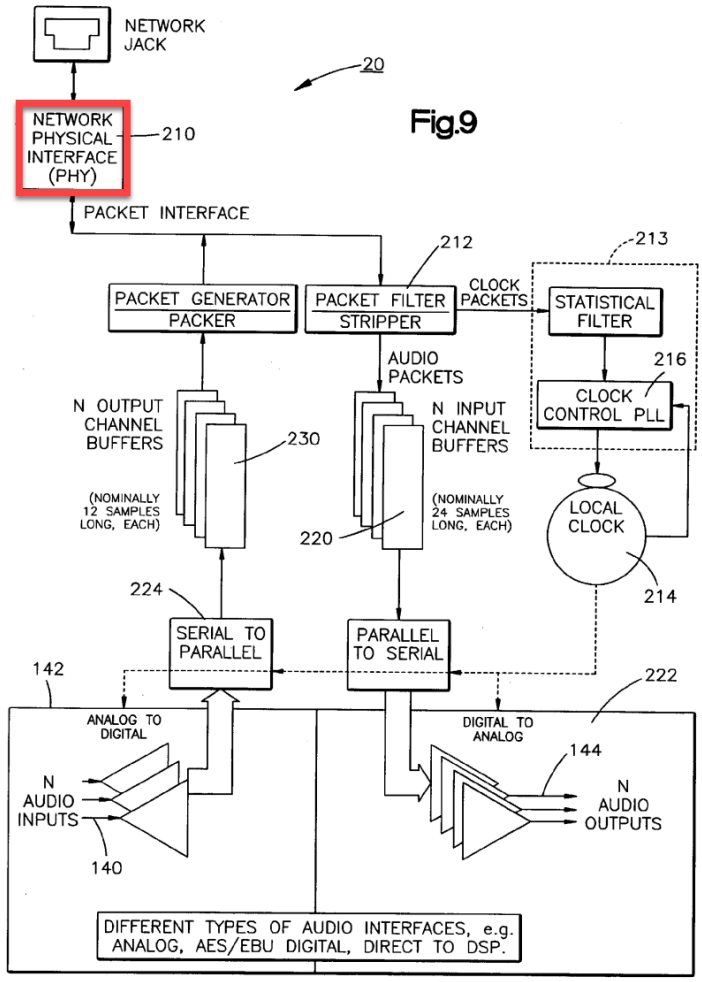

Shay at Fig. 9 (annotated).

"One of at least two methods may be used to initialize the receive FIFO audio buffers 220. The first method is to empty the buffer, while disabling the output. Then, after 24 samples (2 nominal audio frames) have come in from the network, enable the output. The second method is to directly manipulate the internal FIFO memory storage pointers. At the moment the FIFO begins to be filled, set the output pointer equal to the input pointer minus 24 audio samples (or alternatively at this moment set the input pointer to the output pointer plus 24 audio samples). Both of these methods will initialize the received audio channel buffer FIFO to have nominally the chosen buffer occupancy size. The receive channel buffer is implemented in certain nodes using a field programmable gate array (FPGA) commercially available from Xilinx. It includes memory for the buffers and programmable logic for maintaining those buffers. Other nodes, such as PC based nodes implement these buffers completely in software that interfaces with a standard network interface card." Shay at [0127].

Exemplary Disclosures
US7710941 ("Rietschel") (GOOG-SONOSITC-PA-00018781) "Particularly within the context of the output of audio files, it is found to be advantageous to design the synchronization of the individual reproduction units to be in the range below 100 ms. Preferably, the propagation-time differences should be less than 10 ms or less than 2 ms, particularly preferably less than 1 ms. From psychoacoustics, it is known that normal hearing is capable of perceiving relatively large propagation-time differences of greater than 30 ms as echo, which is precisely what needs to be prevented within the context of this invention. It is found that in the aforementioned "multichannel" mode, too, an accuracy in the range of 1 ms is sufficient. The synchronization of data streams to this accuracy can no longer be assured in a typical network without active synchronization of the individual reproduction units, and in particular it is not possible simply to switch in further stations without active synchronization. Typically, the network is a conventional, wired network, but it may preferably also be a wireless network, particularly a radio network (e.g. Wifi, wireless fidelity, also called IEEE802.11b, or follow-up standards at a higher data rate, such as IEEE802.11a)." Rietschel at 4:10-28. "The proposed method also allows tree structures to be operated. Such cascaded synchronization can be achieved by virtue of at least one of the reproduction units being used, for its part, as master for a subnetwork (e.g. LAN). Preferably, corresponding repetitions are then forwarded to the topmost master (root master). It is thus possible to synchronize as many reproduction units as desired, and each of the reproduction units can for its part be used as a repeater (reproduction unit which is active both as a slave and as a master). In principle, it is thus also possible to have a slave which is acting as a master in this fashion sent to another network. For the root master, the result is then altered maximum network delay times, of course, which then need to be taken into account accordingly. This allows the data stream to be replicated very efficiently and possibly extensively." Rietschel at 7:13-25. "The present invention also relates to a data processing program for carrying out a method, as is described above, and to a reproduction unit for carrying out such a method. In this context, the reproduction unit preferably has a network interface (or more generally a communication interface), a central computer unit with a memory, and means for at least indirectly outputting analog or digital data, particularly in the form of a loudspeaker. The memory of such a reproduction unit contains a permanently programmed data processing program for carrying out this method, and this program is activated automatically after the power supply is turned on, with the reproduction unit particularly preferably having means for automatically integrating the unit into the network." Rietschel at 7:38-49. "As an exemplary embodiment of the present invention, a system will be described in which a "transmission unit" distributes a continuous data stream delivered by a (digital or analog) audio data source wirelessly over a plurality of distributed reproduction units (typically active loudspeakers), with the latter decoding and outputting various channels of the same data stream. To this end, the transmitter unit has a CPU, i.e. a processor, buffer store, and at least one bidirectional communication interface, in the example described an 802.11b radio network interface, and an audio input for analog or digital audio data and also its own audio output (that

Exemplary Disclosures
is to say that it is also a reproduction unit). The other reproduction units use the same architecture, but instead of an audio input have a digital and/or analog audio output and possibly power amplifiers and sound transducers/loudspeakers 13." Rietschel at 7:66-8:13. "Each reproduction unit contains a 'discovery server' which, upon the arrival of a particular network block (UDP datagram for a specific port number; UDP is a standard, low-overhead, connectionless, host-to-host protocol which allows data packets to be interchanged over switched computer networks. It allows a program on a computer to send a datagram to a program on another computer), reacts with a response block. Alternatively, it is possible to use other discovery protocols, for example SSDP (Simple Service Discovery Protocol, a subprotocol of UPNP; Universal Plug and Play is a standard which is used to permit direct and automatic linking of peripheral devices in a local network without configuration)." Rietschel at 8:45-56. "All reproduction units operate autonomously. The reproduction units can all independently output media data from a common data source or from different data sources. In this context, the data sources may be arranged in the network, or else they may be data already stored on the reproduction units." Rietschel at 8:37-43. "Each reproduction unit contains a 'discovery server' which, upon the arrival of a particular network block (UDP datagram for a specific port number; UDP is a standard, low-overhead, connectionless, host-to-host protocol which allows data packets to be interchanged over switched computer networks. It allows a program on a computer to send a datagram to a program on another computer), reacts with a response block. Alternatively, it is possible to use other discovery protocols, for example SSDP (Simple Service Discovery Protocol, a subprotocol of UPNP; Universal Plug and Play is a standard which is used to permit direct and automatic linking of peripheral devices in a local network without configuration)." Rietschel at 8:45-56. "Streaming: the master receives the streaming data, e.g. from a server, typically by tcp connection, possibly by http, or else from a local digital or analog interface, codec or the like. The operation of the system is totally independent of the data source used. All incoming data are written to a ring buffer. Whenever a stream 'starts', a byte counter (32 bits) is reset. Each incoming byte from the server is counted and thus has a unique 'address'." Rietschel at 10:48-55. <u>US7392102 ("Sullivan") (GOOG-SONOSITC-PA-00020044)</u> "The method of synchronizing audio playback may be employed on a set of audio playback devices tuned to a common network digital audio broadcast. All audio playback devices are running synchronized clocks. This method does not require that the transmitting device be in sync with the receivers. It requires that only the receivers stay in sync. The method uses a latency detector, a clock synchronizer, and a time drift detector. A master reference computer or other device first sets its own clock, then sets all clocks on all receiving devices using the latency detector and clock synchronizer. It periodically repeats the process, possibly during silence between audio broadcasts, so that the clocks stay in sync. Each receiver also periodically adjusts

Exemplary Disclosures
for time drift, between clock synchronizations, using its time drift detector." Sullivan at 3:15-29. "FIG. 1 illustrates a system of several devices. Transmitting device PCA sends the audio stream, sync information, and time and other data to receiving devices PCn, such as PCB and PCC. Transmitting device PCA controls audio playback for the system. The audio signal is actually transmitted by audio source 5 to PCA and other devices PCn, such as PCB. The devices may be interconnected by a bus cabling or may communicate with one another through wireless communication such as radio frequency or infrared." Sullivan at 4:5-13. <u>US20040224638 ("Fadell") (GOOG-SONOSITC-PA-00015659)</u> "Both the media player [0061] 152 and the media device 154 include a media terminal 158A and 158B, respectively. The media terminals 158 may provide a direct connection between the media player 152 and the media device 154 (e.g., integrally formed with the media device) or it may provide an indirect connection between the media player 152 and the media device 154 (e.g., a stand alone device). The media terminals 158 provide the media link 156 through one or more connection interfaces. As such, the media player 152 may serve the media devices 154 and/or the media devices 154 may serve the media player 152. The connection interfaces associated with the media terminals 158 may be wired or wireless connection interfaces." Fadell at [0061]. "In wired connections, the media terminals [0062] 158 are configured to physically connect so as to operatively couple the media player 152 to the media device 154. For example, the media player 152 and the media device 154 may include a mating connection made up of connector and port. By way of example, the connection interface may include one or more of the following interfaces: PS/2, serial, parallel, network (e.g., Ethernet), USB, Firewire and/or the like." Fadell at [0062]. "In wireless connections, the media terminals [0063] 158 do not physically connect. For example, the media player 152 and the media device 154 may include a receiver and transmitter for wireless communications therebetween. By way of example, the connection interface may include one or more of the following interfaces: FM, RF, Bluetooth, 802.11 UWB (ultra wide band), IR, magnetic link (induction) and/or the like." Fadell at [0063]. "802.11 generally refers to a family of specification for wireless local area networks (WLANs) developed by a working group of the Institute of Electrical and Electronics Engineers (IEEE)." Fadell at [0064]. "For example, the user may broadcast music from the media player 399 to other media devices in a local area or within a local network." Fadell at [0093]. "In another embodiment, both devices include a transceiver (for two way communications). The antenna may be fully contained within the players/devices 402 and 404 or they may extend outside the devices (as shown). By way of example, the wireless communication link may

Exemplary Disclosures
correspond to FM, RF, Bluetooth, 802.11, UWB (ultra wide band), IR (infrared), magnetic link (induction) and/or the like." Fadell at [0097]. <u>US20050131558A1 ("Braithwaite") ("GOOG-SONOSITC-PA-00012990")</u> "An audio distribution network system (20) allowing an audio distribution system to be created that is integrated with the home automation system into a home network that permits vocal feedback, status and even control with the audio through network speakers (100)." Braithwaite at Abstract. "An audio distribution network system 20 (FIG. 1) includes a plurality of speaker node units 100 which are coupled to a Transport Control Protocol/Internet Protocol (TCP/IP) based network backbone 200. Also coupled to the network backbone 200 are networked audio source node devices 300, an Internet service interface 400, and a Legacy converter/controller 600. Legacy sources 500 provide analog or digital linear PCM_(Pulse Coded Modulation)_audio to be converted into a packet switched digital_coding for transport across the network. They will also provide analog video which will be used for control status feedback, as well as conversion to a packet switched_digital coding for transport across the network. In addition, the Legacy sources 500_will also receive IR or serial commands from the converter/controller 600 which also communicates with a Legacy home control network 700. Some legacy sources_500 may also provide serial communications to the converter/controller 600." Braithwaite at [0016]. "The system 20 is a collection of independent computers or other intelligent devices that communicate with one another over the shared TCP/IP network 200. For example, the system 20 can be part of the Internet linked networks that are worldwide in scope and facilitate data communication services such as remote login, file transfer, electronic mail, the World Wide Web and newsgroups, or for security reasons part of a home intranet network utilizing Internet-type tools, but available only within that home. The home intranet is usually connected to the Internet via an Internet interface 400. Intranets are often referred to as LANs (Local Area Networks)." Braithwaite at [0018]. "The home network backbone 200 communicates using the TCP/IP network protocol consisting of standards that allow network members to communicate. A protocol defines how computers and other intelligent devices will identify one another on a network, the form that the data should take in transit, and how this information is processed once it reaches its final destination. Protocols also define procedures for handling lost or damaged transmissions or "packets". The TCP/IP network protocol is made up of layers of protocols, each building on the protocol layers below it. The basic layer is the physical layer protocol that defines how the data is physically sent through the physical communication medium, such as Thickwire, thin coax, unshielded twisted pair, fiber optic, telephone cable, fiber optic cable, RF, IR, power line wires, etc. Those physical media requiring an actual physical connection of some type, such as Thickwire, thin coax, unshielded twisted pair, fiber optic, power line, telephone cable, or fiber optic cable, to the network device are called wired media Those physical media not requiring an actual physical wire connection of any type to the network device, such as RF and IR, are called wireless media.

Exemplary Disclosures
A TCP/IP home network can be totally wired, totally wireless, or a mix of wireless and wired. A TCP/IP home network is not limited to a single physical communication medium. Different physical communication media can be connected together by bridging components to create a unified communication network. Each network physical media has its physical layer protocol that defines the form that the data should take in transit on that particular physical media. The bridging component enables the transfer and conversion of communication on one physical medium and its physical layer protocol to a different physical media and its physical layer protocol. Bridging components also may provide a proxy from one network to the other, this will be common among UpnP_V1 to V2, and with Ipv6 to Ipv4 (Internet Protocol version 6, 4). Common physical layer LAN technology in use today include Ethernet, Token Ring, Fast Ethernet, Fiber Distributed Data Interface (FDDI), Asynchronous Transfer Mode (ATM) and LocalTalk. Physical layer protocols that are very similar over slightly different physical media are sometimes referred to be the same name but of different type. An example are the three common types of Fast Ethernet: 100 BASE-TX for use with level 5 UTP cable, 100BASE-FX for use with fiber-optic cable, and 100BASE-T4 which utilizes an extra two wires for use with level 3 UTP cable. The TCP/IP protocol layers are well known and will not be further described in greater detail." Braithwaite at [0019]. <u>IEEE Std 1588-2002 ("IEEE") (GOOG-SONOSITC-PA-00023839)</u> "This standard defines a protocol enabling precise synchronization of clocks in measurement and control systems implemented with technologies such as network communication, local computing, and distributed objects. The protocol will be applicable to systems communicating by local area networks supporting multi-cast messaging including, but not limited to, Ethernet. The protocol will enable heterogeneous systems that include clocks of various inherent precision, resolution, and stability to synchronize. The protocol will support systemwide synchronization accuracy in the submicrosecond range with minimal network and local clock computing resources. The default behavior of the protocol will allow simple systems to be installed and operated without requiring the administrative attention of users." IEEE at 2.
7[c] tangible, non-transitory computer-readable media having instructions encoded therein, wherein the instructions, when executed by the first zone player, cause the first zone player to perform functions comprising:
The disclosures listed under claim element 7[c] in Exhibits 715-01 through 715-09 demonstrate that the limitation was known and a POSITA would have been motivated to incorporate it into an existing audio system. Defendant incorporates by reference each of those disclosures here. The references discussed below further demonstrate that this limitation was an obvious modification and provide rationales for making the modification. <u>US20040114607 ("Shay")</u> "A packet filter 212 tests the data in each received packet of data to see if it belongs to one of the audio streams, or contains clock sync information, or not. If neither audio nor a clock packet,

Exemplary Disclosures
the packet either represents non-audio data for that node or is addressed to another node. If the packet contains non-audio data a node processor interprets that data in a conventional manner. The packet filter does this by comparing the destination address contained inside the data packet, with a list of destination addresses that the receiving terminal is programmed to accept. The list of accepted destination address numbers is programmed by a node processor 213 into the packet filter ahead of time depending on which audio channels from the network the user desires to come out of the outputs of this audio receive terminal. If the packet address does not match any of the accepted destination addresses on the list, no further action is taken on that packet and it is simply ignored. If the packet address does match an accepted address on the list, which address it matches determines the next step of processing the incoming packet." *Id.* at [0019]. <u>US7710941 ("Rietschel") (GOOG-SONOSITC-PA-00018781)</u> "The present invention also relates to a data processing program for carrying out a method, as is described above, and to a reproduction unit for carrying out such a method. In this context, the reproduction unit preferably has a network interface (or more generally a communication interface), a central computer unit with a memory, and means for at least indirectly outputting analog or digital data, particularly in the form of a loudspeaker. The memory of such a reproduction unit contains a permanently programmed data processing program for carrying out this method, and this program is activated automatically after the power supply is turned on, with the reproduction unit particularly preferably having means for automatically integrating the unit into the network." Rietschel at 7:38-49.
7[d] performing a master device role for a synchrony group comprising the first zone player and a second zone player, wherein in the master device role, the first zone player is configured to control synchronous playback of information content by both the first zone player and the second zone player in response to playback commands received from a controller device via a network interface of the first zone player;
The disclosures listed under claim element 7[d] in Exhibits 715-01 through 715-09 demonstrate that the limitation was known and a POSITA would have been motivated to incorporate it into an existing audio system. Defendant incorporates by reference each of those disclosures here. The references discussed below further demonstrate that this limitation was an obvious modification and provide rationales for making the modification. <u>US20040114607 ("Shay")</u> "To reduce delay and ensure reliable audio, a common sampling clock must be used system-wide by nodes 20 on the network shown in FIG. 1. If each converter had an independent clock, the slight differences in the rate would mean that a buffer would be needed at the receiver, and even so, after some time the buffer would eventually over or under-flow and the audio would be interrupted." *Id.* at [0072].

Exemplary Disclosures
"In accordance with the invention, one terminal or node is designated to be the master clock source and implements a master clock 150 to which all the other nodes 20 are locked. (If the master clock is unplugged or fails, another node automatically takes its place in a seamless fashion.) A clock packet that contains a time value 152 is periodically sent by the source node but unlike the prior art patents referenced above this packet is not used to create time slots or to order the outputs of the transmitting terminals. Such control is not needed , because the invention uses switched Ethernet rather than a shared medium and has no need for timed access. The clock packet is not transmitted at the beginning of a sequence of audio packets. Rather, it is transmitted at a much lower rate and a PLL (Phase Locked Loop) circuit at each of the nodes increases the rate to provide a synchronized audio sample clock in receiving terminals or nodes." *Id.* at [0073]. "Referring to FIG. 4, in order to synchronize multiple clock devices, one device is chosen to be the master and implements a master clock 150, while all other devices become slaves which must follow and synchronize to the one master by implementing a slave clock 154. Choosing which device will be the master may be a manual operation, or an automatic one determined by a predetermined protocol exchanged via the communication network 10 in the event of a failure of the master. In one exemplary process after a timeout delay of receiving no clocks, the master clock 150 is assumed not functioning any longer, and every possible new master transmits a preliminary clock message. If there are more than one new clock master candidate, the candidates vote themselves off in favor of the master detected with highest merit. In this embodiment the master with highest merit is determined from an assignment of unique values to each device, for example, such a the lowest ethernet network address value." *Id.* at [0079].   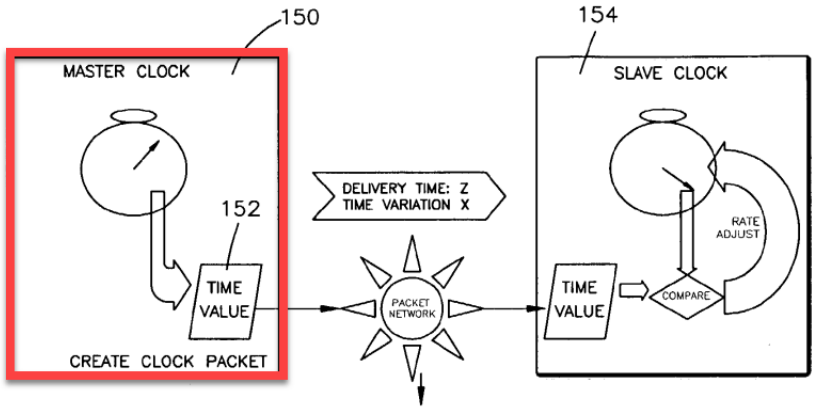 Fig.4 *Id.* at Fig. 4 (annotated). "The master marks and communicates time reference moments to all slaves, by a broadcast or multicast method of addressing all slaves with one packet. This packet contains a time reference count, called a timestamp value 152. This timestamp value 152 is a measure of time made by the master clock device in arbitrary time units. It is important that the value 152 is to be of high enough resolution to allow very small time differences or errors to be calculated by the slaves.

Exemplary Disclosures
In the exemplary implementation, the timestamp is in units of {fraction (1/12,288,000)} Hz (approximately 80 ns)." *Id.* at [0080]. "Recovering Digital Audio Synchronization" *Id.* at [0074]. "The ability to recover digital audio synchronization at multiple stations or nodes on the network relies on specialized statistical filtering of received timestamped clock information packets. Because packet switched networks can introduce a variable routing delay, a variable time delay is introduced into the communication of timing information, which would cause a variable timing synchronization error in all receivers. However, because the packet switched network can only add delay, it can never deliver a packet 'early'. This error is biased, and therefore can be mathematically filtered out." *Id.* at [0075]. "Any devices communicating digitized audio information must operate off of an identical time base, or the digital audio information exchanged will not be able to be output, mixed, or otherwise combined with other audio channels. (A straightforward solution of using sample rate conversion for each audio data stream has the undesirable penalty of creating audio delay due to the buffering required by the mathematical conversion filtering process.) Therefore, a desirable solution is to have a clock circuit in each device or receiver station which are all synchronized together to a common time reference. However, in order to synchronize clock devices, information must be communicated between them, allowing them to be adjusted to be synchronized. This synchronization information is itself sensitive to timing errors, that is to say time delays in the communication of synchronization information will prevent proper time synchronization." *Id.* at [0076]. "Once the measure of the local clock time is made by the master clock 150, the resulting data packet (called a clock packet) is sent to the packet network 10 for communication to all the slaves. Each slave, when it receives a clock packet, measures it own local clock device 154, for comparison to the master clock reference value 152 communicated inside the packet. In order to synchronize the slave clock 154 to the master clock, successive comparisons between the master and slave clock values are made at the slave node. If the comparison value is getting larger over time, then the slave clock 154 is running too fast, and a rate control adjustment is made to slow the slave clock down, and vice versa if the slave clock is found to be running too slow, a rate adjustment is made to speed it up. The specific formulas used to calculate the amount of rate adjustment given the amount of observed comparison differences over time, may be many different standard control algorithms, including standard second order PLL (Phase Lock Loop), or PID (Proportional Integral Differential) control algorithms that are implemented in software." *Id.* at [0081]. "The exemplary embodiment of the invention uses a novel design for transmitting timestamped clock references on packet switched networks allowing optimal clock synchronization recovery that is particularly advantageous for use with audio data transmission. The disclosed exemplary embodiment of the invention uses a process for sending timestamped clock references, which

Exemplary Disclosures
optimizes clock recovery when using a statistical filtering synchronization scheme in each receiver." *Id.* at [0096]. "A packet filter 212 tests the data in each received packet of data to see if it belongs to one of the audio streams, or contains clock sync information, or not. If neither audio nor a clock packet, the packet either represents non-audio data for that node or is addressed to another node. If the packet contains non-audio data a node processor interprets that data in a conventional manner. The packet filter does this by comparing the destination address contained inside the data packet, with a list of destination addresses that the receiving terminal is programmed to accept. The list of accepted destination address numbers is programmed by a node processor 213 into the packet filter ahead of time depending on which audio channels from the network the user desires to come out of the outputs of this audio receive terminal. If the packet address does not match any of the accepted destination addresses on the list, no further action is taken on that packet and it is simply ignored. If the packet address does match an accepted address on the list, which address it matches determines the next step of processing the incoming packet." *Id.* at [0119].   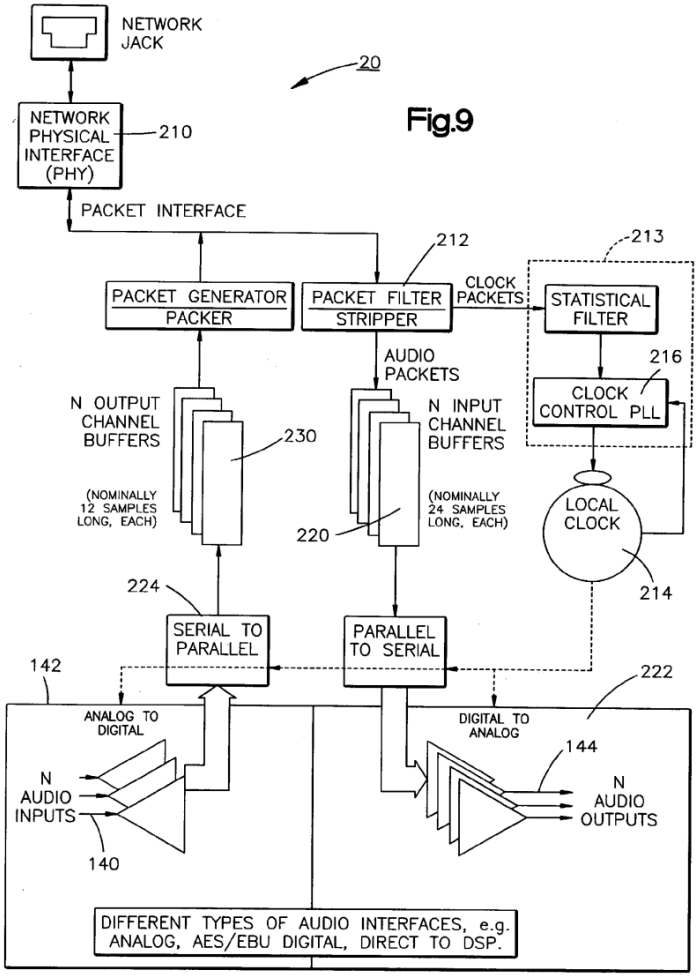

Exemplary Disclosures
Id. at Fig. 9. "If the packet destination address matches one of the audio channel addresses on the list, then that packet is routed and stored into a corresponding audio channel buffer 220. That is, if the audio packet address matches the first audio channel address on the list, then the audio data is put into the first audio channel buffer, matching the second address on the list goes into the second audio channel buffer, and so forth The audio channel buffers 220 are maintained in FIFO order, and read out at a periodic rate determined by the local sample clock, serialized, and sent to the Digital to Analog (D/A) converter 222 to be converted into an analog audio signal output 144 (or sent to an AES/EBU transmitter to become a standard digital audio signal)." *Id.* at [0123]. "For a packet switched network carrying digital audio traffic streams of some amount, say 80% capacity, plus command and control information for those digital audio devices, an exemplary system has a very high probability of some clock packets arriving with minimum variable delay by collecting between 50 and 250 clock packets over an interval of 200 milliseconds to 1 second." *Id.* at [0092]. "FIG. 1 is schematic depiction of a general architecture design of a network 10 that is used at a facility having multiple computers 12 and other audio equipment 14. The network 10 uses a switched Ethernet network for delivering both audio and data to any node (such as one of the computers 12) on the network. A node need not include an entire computer but instead may simply be circuitry that includes a network interface circuit and an audio jack for plugging in a speaker, set of headphones, microphone or amplifier. FIG. 9 is a functional block diagram of a typical node on the network 10." *Id.* at [0040].

Exemplary Disclosures

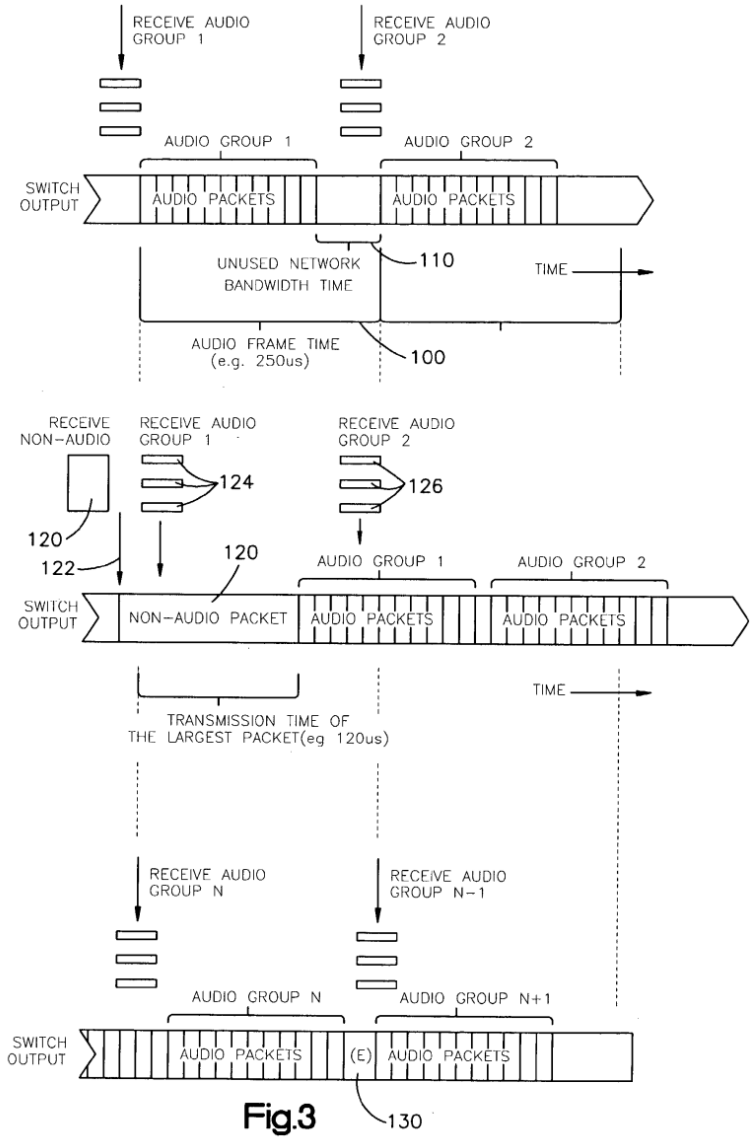

Fig.3

Id. at Fig. 3.

<u>EP1202490A1 ("Fujimori")</u>

"According to an aspect of the present invention, there is provided a communication control apparatus which comprises: group setting means for selecting one or more nodes from among a plurality of nodes connected to a communication network and classifies the selected nodes as one node group; and registration means for, in association with each of the nodes classified as the one node, registering group identification information for identifying the node group. The

Exemplary Disclosures
group identification information can be used to identify nodes constituting a node group that should at least commonly receive data." Fujimori at [0009]. "In the case of nodes handling tone-related signals, they receive synchronization signals from a clock master node so that synchronization is achieved, on the basis of the synchronization signals, between the nodes in reproducing the tone signals." Fujimori at [0002]. <u>US20020018458A1 ("Aiello")</u> "The present invention is a wireless communication network system for isochronous data transfer between node devices." Aiello at [0021]. "In operation, the master transceiver 12 periodically broadcasts an ALOHA packet in the command slot 62 to ascertain or otherwise detect "unregistered" slave devices and to receive command requests from the slave transceivers of then network. More generally, an ALOHA broadcast is an invitation to slave transceivers to send their pending protocol messages. This arrangement is known as "slotted ALOHA" because all protocol messages including the ALOHA broadcast are sent during a predetermined time slot. In the preferred embodiment, the ALOHA broadcast is transmitted at a predetermined interval." Aiello at [0080]. <u>US7710941 ("Rietschel") (GOOG-SONOSITC-PA-00018781)</u> "When such a system of reproduction units is started up, it is important to define a master in good time so that the individual reproduction units do not all reciprocally attempt to align themselves relative to one another. In line with one preferred embodiment of the invention, this is advantageously done such that the first reproduction unit which has the task of reproduction is automatically defined as master. The procedure in this case is typically such that a unit, having been requested to effect reproduction, initially understands itself simply to be a potential master but does not start any actions which are typical of a master. At the instant at which it receives a request from another reproduction unit to make the data stream being played back available, the unit becomes the master. The requesting unit automatically becomes the slave. It goes without saying that it is also possible to define a unit as a master, but this solution has the drawback that if this master is ever not intended to be operated for whatever reasons or fails then the system is in an undefined state. Correspondingly, it should also be stated in the protocol that if the present master fails or is turned off, the first unit implementing this automatically defines itself as the new master in the network and immediately undertakes the task as the master." Rietschel at 3:24-44. "Slave: a station which has been requested by user interface or command or permanent setting/parameterization to play in sync with another reproduction unit ('master')." Rietschel at 8:30-32. "Request for Synchronization:

Exemplary Disclosures
A station can be stimulated by various influences to synchronize itself to another unit and reproduce its media stream: 1. By means of fixed configuration ('setup'). Such a station constantly attempts to synchronize itself to the configured master. 2. By means of a command from an application (e.g. by cgi command, cf. above). 3. By receiving a command via UDP—the case 'ALL synchronizing to station xxxx' is also feasible. 4. By means of an action by the user and triggering via user interface." Rietschel at 9:7-17. "Registration: when the time synchronization has been set up (see above), the slave asks the reproduction unit whose data stream it wishes to reproduce in synchronized fashion to adopt the 'master' role. This is done by sending a command (SYNC_REQ) to the (master)-specific UDP port/channel. Acknowledgement by the master confirms receipt of the command, and if there is no acknowledgement then the slave repeats the command, if necessary a plurality of times." Rietschel at 10:40-47. Rietschel teaches that the control information is transmitted over the LAN via the network interface. "Particularly within the context of the output of audio files, it is found to be advantageous to design the synchronization of the individual reproduction units to be in the range below 100 ms. Preferably, the propagation-time differences should be less than 10 ms or less than 2 ms, particularly preferably less than 1 ms. From psychoacoustics, it is known that normal hearing is capable of perceiving relatively large propagation-time differences of greater than 30 ms as echo, which is precisely what needs to be prevented within the context of this invention. It is found that in the aforementioned "multichannel" mode, too, an accuracy in the range of 1 ms is sufficient. The synchronization of data streams to this accuracy can no longer be assured in a typical network without active synchronization of the individual reproduction units, and in particular it is not possible simply to switch in further stations without active synchronization. Typically, the network is a conventional, wired network, but it may preferably also be a wireless network, particularly a radio network (e.g. Wifi, wireless fidelity, also called IEEE802.11b, or follow-up standards at a higher data rate, such as IEEE802.11a)." Rietschel at 4:10-28. "A further improvement in the coordination and particularly in the control between master and reproduction units or slaves can be achieved by using the data streams or data packets to send at least one command to the reproduction units together with an associated execution time. By way of example, it is possible to transfer commands such as Pause, Play, Stop etc. in this context. Preferably, the execution time should be chosen such that at least the longest network delay time established in the network between the master and the reproduction unit can elapse between the

Exemplary Disclosures
transfer of the command to the network and the execution time. It is thus possible to ensure that when the command arrives at the respective reproduction unit the execution time is not yet in the past." Rietschel at 6:17-29. "The proposed method also allows tree structures to be operated. Such cascaded synchronization can be achieved by virtue of at least one of the reproduction units being used, for its part, as master for a subnetwork (e.g. LAN). Preferably, corresponding repetitions are then forwarded to the topmost master (root master). It is thus possible to synchronize as many reproduction units as desired, and each of the reproduction units can for its part be used as a repeater (reproduction unit which is active both as a slave and as a master). In principle, it is thus also possible to have a slave which is acting as a master in this fashion sent to another network. For the root master, the result is then altered maximum network delay times, of course, which then need to be taken into account accordingly. This allows the data stream to be replicated very efficiently and possibly extensively." Rietschel at 7:13-25. "As an exemplary embodiment of the present invention, a system will be described in which a "transmission unit" distributes a continuous data stream delivered by a (digital or analog) audio data source wirelessly over a plurality of distributed reproduction units (typically active loudspeakers), with the latter decoding and outputting various channels of the same data stream. To this end, the transmitter unit has a CPU, i.e. a processor, buffer store, and at least one bidirectional communication interface, in the example described an 802.11b radio network interface, and an audio input for analog or digital audio data and also its own audio output (that is to say that it is also a reproduction unit). The other reproduction units use the same architecture, but instead of an audio input have a digital and/or analog audio output and possibly power amplifiers and sound transducers/loudspeakers 13." Rietschel at 7:66-8:13. "Each reproduction unit contains a 'discovery server' which, upon the arrival of a particular network block (UDP datagram for a specific port number; UDP is a standard, low-overhead, connectionless, host-to-host protocol which allows data packets to be interchanged over switched computer networks. It allows a program on a computer to send a datagram to a program on another computer), reacts with a response block. Alternatively, it is possible to use other discovery protocols, for example SSDP (Simple Service Discovery Protocol, a subprotocol of UPNP; Universal Plug and Play is a standard which is used to permit direct and automatic linking of peripheral devices in a local network without configuration)." Rietschel at 8:45-56. <u>US7392102 ("Sullivan") (GOOG-SONOSITC-PA-00020044)</u> "A method is provided for synchronizing the playback of a digital audio broadcast on a plurality of network output devices by inserting an audio waveform sample in an audio stream of the digital audio broadcast. The method includes the steps of outputting a first unique signal as part of an audio signal which has unique identifying characteristics and is regularly occurring, outputting a second unique signal so that the time between the first and second unique signals must be significantly greater than the latency between sending and receiving devices, and coordinating play of audio by an audio waveform sample assuring the simultaneous output of

Exemplary Disclosures
the audio signal from multiple devices. An algorithm in hardware, software, or a combination of the two identifies the audio waveform sample in the audio stream. The digital audio broadcast from multiple receivers does not present to a listener any audible delay or echo effect." Sullivan at Abstract. <u>US20020124097 ("Isely") (GOOG-SONOSITC-PA-00016308)</u> Isely teaches a user device and a controller, which together provide a user interface (i.e., the claimed "controller"). The controller is informed of the list of available audio devices through a "salutation protocol," by which audio devices announce their presence (i.e., "transmit status information") to the controller over the local network. The controller provides direction for an audio device to enter into a synchrony group with another device by dynamically assigning "associated identifiers" or "associated addresses" (i.e., "control information") to a designated group of audio devices that should tune to the same channel. "In other embodiments of the present invention, site based dynamic distribution systems are provided for distributing an audio signal over a local network for the site. A network interface receives digital audio streams and outputs the digital audio streams on a local network for the site using an address based protocol. Ones of the digital audio streams have different associated identifiers. A plurality of network attached audio devices receives a selected digital audio stream over the local network for the site based on a designated one of the associated identifiers and outputs the received digital audio stream to audio equipment located at the site. Each of the respective network attached audio devices is associated with a group of audio equipment. A user interface receives a user designation of aggregations of the audio equipment located at the site. A controller coupled to the plurality of network attached audio devices designates the associated identifier to be received by respective ones of the plurality of network attached audio devices based on the user designation to provide dynamic zone aggregation of the audio equipment at the site." Isely at [0017]. "In further embodiments of the present invention, the site is a residence and various of the groups of audio equipment are associated with respective rooms of the residence. The address based protocol may be a User Datagram Protocol (UDP) and may further be a Real-time Transport Protocol (RTP) and the network interface may be an RTP interface. The RTP interface may output the digital audio streams using time-stamped packets using UDP. The plurality of network attached audio devices may be configured to provide a salutation protocol to announce their presence to the controller over the local network. Furthermore, the controller may be configured to assign the associated address to be received by respective ones of the plurality of network attached audio devices to the network attached audio devices over the local network using the salutation protocol so as to group ones of the plurality of network attached audio devices." Isely at [0018]. "The site may be a residence and the network 120 may be a home network. The home network may operate using a variety of protocols including, but not limited to, Ethernet. A controller 125 is provided which is coupled to the local network 120 and to a user device 130. Thus, the site

Exemplary Disclosures
based dynamic distribution system 140 receives audio signals from external audio sources 110 and control inputs from a user device(s) 130." Isely at [0036]. "The network interface 100 receives digital audio streams and outputs the digital audio streams on the local network 120 using an address based protocol with each of the digital audio streams having a different associated identifier. The plurality of network attached audio devices 105 are configured to receive a selected one of the digital audio streams over the network 120 based on a designated one of the associated identifiers. The network attached audio devices 105 are further configured to output the received digital audio stream to the audio equipment 145, 150." Isely at [0038]. "The user device 130, in combination with the controller 125, provides a user interface configured to receive a user designation of aggregations of the audio equipment 145, 150 located at the site so as to provide dynamic zone aggregation in various embodiments of the present invention. The controller 125 operates to designate the associated identifiers to be received by respective ones of the plurality of network attached audio devices 105. In other words, the controller 125 essentially tells the network audio devices 105 the "channel" to which they should tune. The controller 125 makes this designation based on the user designation from the user device 130 to provide dynamic zone aggregation. Thus, individual ones of the network attached audio devices may be grouped together and instructed to listen to the same channel to provide common audio signals to multiple rooms in a house while other groupings of the network attached audio devices 105 may be assigned a different channel to provide a different audio signal source in another set of rooms within the residence. Groups of the network attached audio devices 105 may be defined which provide a dynamically configurable virtual zone within the house for purposes of providing communication of audio signals over the local network 120." Isely at [0039]. "When the audio devices 105 are powered they may use a salutation protocol (such as Universal Plug and Play (UPnP), Jini from Sun Microsystems or Salutation) to announce their presence on the network 120. The controller 125 with audio configuration capability collects a list of all the audio devices 105 and provides, in cooperation with the network interface 100, an interface for aggregating and segregating virtual zones and may use the same salutation protocol to distribute the interface. The audio devices 105 may then be remotely configured using the same salutation protocol to add them to network groups." Isely at [0041]. "In various embodiments of the present invention, the addressable audio devices further provide an announcement of their presence over the local area network, for example, utilizing a salutation protocol (block 515). The audio interface 320 and the zone manager 315 may, thus, be automatically notified of what audio devices 305 are available on the local network 310." Isely at [0059]. "A user may, at various times, provide designations of ones of the groups of audio equipment at the site to be aggregated/segregated (block 520). Each group of audio equipment which is designated is associated with one of the addressable audio devices 305 so that, for example, an

Exemplary Disclosures
aggregation of groups of audio equipment may include groups of audio equipment in a plurality of different rooms with each group of audio equipment being associated with a room (or rooms) serviced by a particular addressable audio device 305 and a virtual zone across multiple rooms being provided by the aggregation of groups of audio equipment. The network interface 100 or audio interface 320 may, thus, dynamically designate respective ones of the addressable audio devices for inclusion in an aggregation of groups of audio equipment. (block 525). Furthermore, one of the identifiers associated with a digital audio stream to be received by the respective addressable audio devices in the group may be provided (block 525). The selection of a digital audio stream to which each audio device in a group will "tune" may be provided to the OSGi 350 as part of a received user designation at block 520. The digital audio stream associated with the designated identifier is then received at respective ones of the addressable audio devices over the local network (block 530). The received digital audio stream is then output to the groups of audio equipment associated with the addressable audio devices (block 535)." Isely at [0060]. Isely Fig. 1:   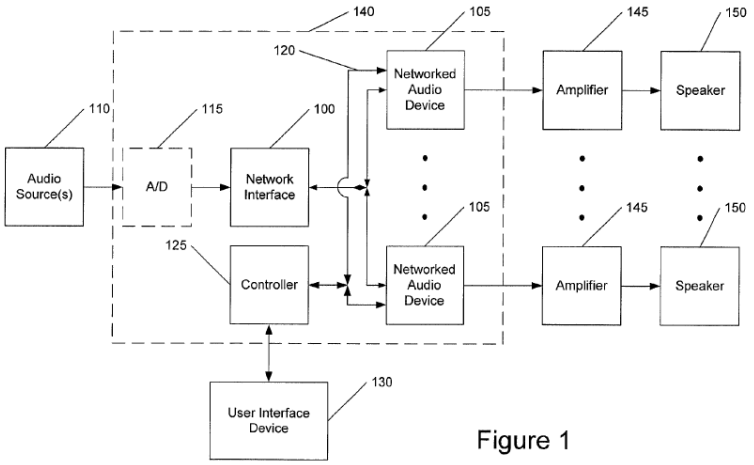   Isely Fig. 3:

Exemplary Disclosures

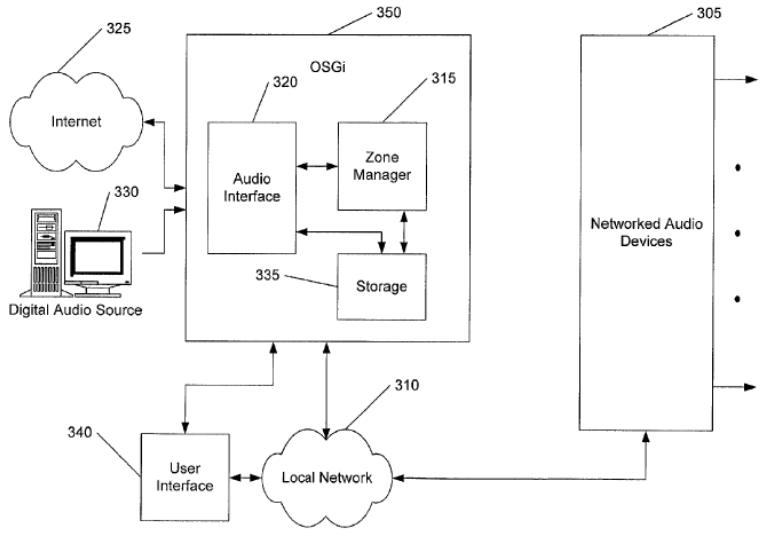

Figure 3

"Dynamic designation may be provided to the audio devices over the local network. The digital audio streams may be provided over the local network based on UDP or based on Transport Control Protocol (TCP). Furthermore, RTP may be used to provide the digital audio streams using time-stamped packets over UDP. Furthermore, the designations provided at block 525 may be provided over the local network using the salutation protocol used by the respective audio devices to announce their presence at block 515." Isely at [0061].

"The systems 140, 350, 305, 415 along with the user devices 130, 340, 430 provide an audio player as a device or interface, which control the configuration of an "audio network." It can be provided as a true hardware device with knobs and flashing lights or as a software component that presents a user interface via a computer, either directly attached or remote via, for example, a network and HTML or some other markup language. The audio player may be visually configured to select a virtual zone or room/channel and a virtual effect can be associated with the selected channel(s). An audio signal source, such as a CD player, digital content from the Internet, or digital audio files on network storage, is also selected. The audio player then delivers the audio signal to the target virtual zone and/or channel using the proper network group and the proper encapsulation protocol. Channels can be added or removed from the virtual zone in some embodiments of the present invention by dynamically configuring additional audio devices to belong to the same network group." Isely at [0057].

Moreover, Isely discloses "a plurality of" controllers. Isely's audio system includes "multiple computers … throughout a home." Isely at [0002]; id. at [0031] (describing implementing the invention as program code that can execute on computers). Isely also discloses presenting the user interface remotely "via a computer." See, e.g., Isely at [0057] ("The systems 140, 350, 305, 415 along with the user devices 130, 340, 430 provide an audio player as a device or interface, which control the configuration of an 'audio network.' It can be provided as a true hardware

Exemplary Disclosures
device with knobs and flashing lights or as a software component that presents a user interface via a computer, either directly attached or remote via, for example, a network and HTML or some other markup language.”). Accordingly, Isely’s controller may be implemented as a software application installed on any number of computers. Alternatively, Isely renders “a plurality of” controllers obvious. It would have been trivial for a POSITA to utilize Isely’s system—which already contemplates using a software user interface and multiple computers in a home network—so that the user interface is installed in any number of computers connected to the same network. This approach would have the advantage that all PC controllers and audio players in the same zone would communicate over the same LAN connection, allowing for greater functionality such as, for example, using any controller to control all audio players. A POSITA would have found such an approach to effectively “allow a homeowner to use the same hand-held remote control in any room.” Isely at [0002]. “Systems and methods are provided for dynamic distribution of audio signals at a site based on defined zones within the site. A plurality of addressable audio devices are coupled to a local network for the site which are configured to receive a designated digital audio stream over the local network and to output the received digital audio stream to audio equipment located at the site. A zone manager defines a plurality of zones for the site which may include a plurality of the addressable audio devices. The zone manager defines a relationship between a characteristic of the audio signal for a reference audio device and for the addressable audio devices in the zones. An audio interface receives digital audio streams and outputs the digital audio streams on the local network addressed to selected ones of the audio devices based on the defined zones, the defined relationship between a characteristic of the audio signal for a reference audio device and for the addressable audio devices and a control input associated with the characteristic. A user interface is provided which is configured to receive a user designation of the control input. Systems and methods for dynamic aggregation of audio equipment in zones are also provided.” Isely at Abstract. “Increasingly, existing homes and homes under construction are being ‘networked’ wherein communications cables (audio, video, data, and/or telecommunications cables) are being extended to many rooms and, in some cases, to multiple locations within each room. The benefits of ‘home networking’ may include the ability to network multiple computers, printers and peripherals throughout a home and to access the Internet through a single high-speed connection; to listen to audio signals, such as music, from a selected signal source from any room in the house; to watch an internally modulated video signal such as a video cassette recorder (VCR), digital video disk (DVD), or satellite television receiver from any room in the home; to use a digital phone system, such as an ISDN line, throughout the home; to add security video cameras in the home and view them on any television; and to add future equipment that may allow a homeowner to use the same hand-held remote control in any room.” Isely at [0002]. “Home networking typically requires the use of a central distribution panel which serves as a gateway or interface to various communications services. Within these central distribution panels, cable distribution modules are typically utilized to receive a cable from a service

Exemplary Disclosures
provider or other signal source and distribute signals carried by the cables among various communications cables that are routed throughout the home. For example, a video cable distribution module may be configured to receive a cable television signal from a cable television service provider and distribute the signal to multiple cables routed within a home." Isely at [0003]. "More particularly with reference to the home audio market, whole house audio currently may be provided broken into segments that can be described by the number of zones which are supported and the number and type of components in each whole house audio system. A whole house audio system generally includes a variety of audio components (such as amplifiers, tuners, CD players, etc.) and the speakers that deliver audio content to various rooms in a home. A zone in such systems is typically a single room, but may be more generally defined as a group of speakers that are driven by a single amplifier from a single source. A source can be an audio component such as a tuner, CD player, DVD player, VCR, or tape deck or it can be digital audio content from the Internet or digital music files, such as moving picture experts group (MPEG)-3 (MP3) format files." Isely at [0004]. "It is known to that audio devices may be connected to a network. One particular type of audio device is an MP3 player. An MP3 player may be coupled to a network to receive a digital audio data stream and deliver audio speaker level output in stereo. Another type of network attached audio device from AVio Digital, Incorporated of San Carlos, Calif. is a multi-zoned network attached audio listening device based upon Avio's proprietary MediaWire™ technology. Such a device generally has the ability to dynamically configure and create active zones from devices connected to the network using the proprietary technology but is typically not compatible with non-proprietary network protocols such as the Internet protocols (IP). In effect, the devices are attached to a 'party' bus, in which they can be configured to listen to any of the 'conversations' (audio streams) in progress." Isely at [0008]. "Computer program code for carrying out operations of the present invention may be written in an object oriented programming language such as Java®), Smalltalk or C++. However, the computer program code for carrying out operations of the present invention may also be written in conventional procedural programming languages, such as the 'C' programming language or assembly language. The program code may execute entirely on the user's computer, partly on the user's computer, as a stand-alone software package, partly on the user's computer and partly on a remote computer or entirely on the remote computer. In the latter scenario, the remote computer may be connected to the user's computer through a local area network (LAN) or a wide area network (WAN), or the connection may be made to an external computer (for example, through the Internet using an Internet Service Provider)." Isely at [0031]. Isely Fig. 4:

Exemplary Disclosures
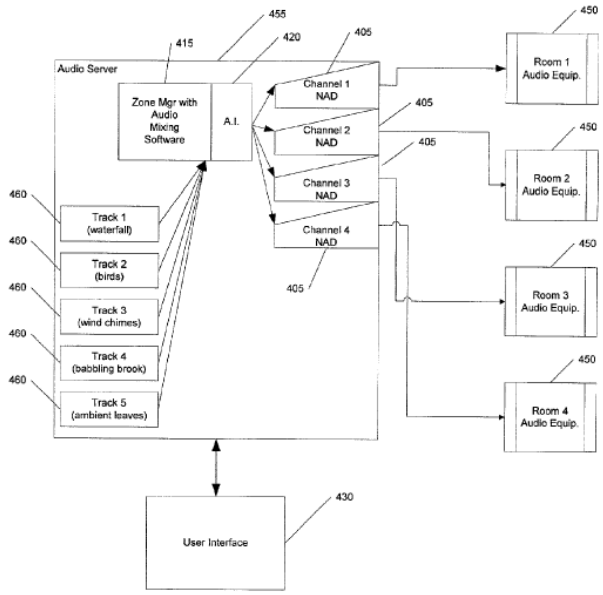 Figure 4 US5808662 ("Kinney") (GOOG-SONOSITC-PA-00016393) Kinney discloses "a plurality of computer-controlled playback systems" interconnected via a communication channel such as LAN. "The present invention provides a system and method for allowing a plurality of physically remote participants to view a movie or other time-based digital media in an interactive and collaborative manner. The movie includes one or more data structures, called "tracks", containing time-based data that is intended to be played together in a synchronized manner at a given rate of speed. Each participant interacts with a computer-controlled playback system. The computer-controlled playback systems are interconnected by a communication channel." Kinney at 2:5-14. "FIG. 1 illustrates an image processing network 100. The network 100 includes a plurality of computer-implemented playback systems 105, 107 and 109 and a communication channel 160. Communication channel 160 can take many forms, including a conventional telephone line with modem, a local area network (LAN) or wide area network. Network interface 135 allows playback system 105 to transfer/receive data to/from playback systems 107 and 109, as is well known in the art. The essential features of playback system 105 include a media playback engine 110, a media (or movie) file 115, network interface 135 and a monitor 140." Kinney at 3:16-26.

Exemplary Disclosures

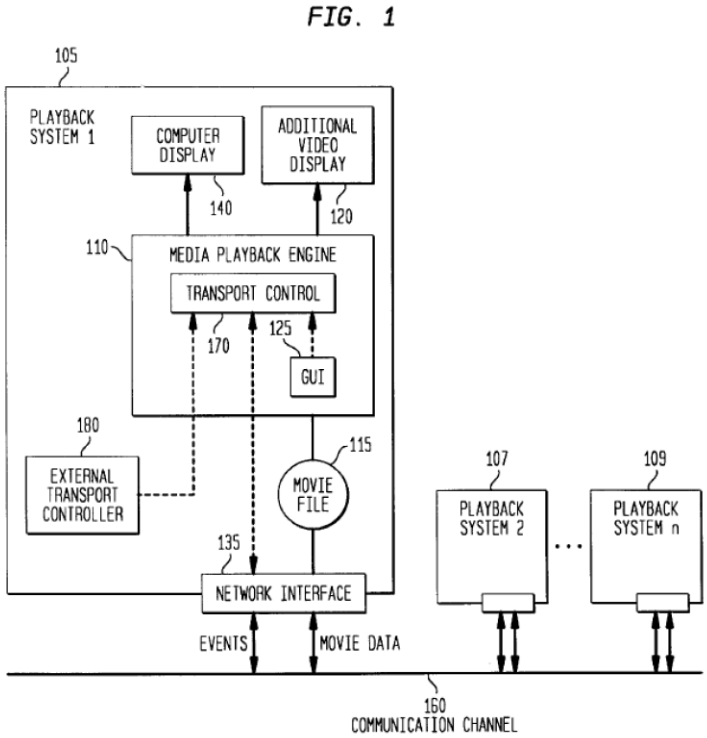

"The present invention initially transfers movie data to each one of the computer-controlled playback systems. Next, one of the participants interactively requests a playback function selected from a group including at least the following functions: play, stop and seek. Playback control data corresponding to the selected playback function is then transferred over the communication channel to each of the computer-controlled playback systems. Finally, the movie data is played in a synchronized manner at each of the playback systems in accordance with the playback control data. The present invention further allows the power and flexibility of digital computing to further enhance the collaborative nature of such sessions, by permitting participants to conveniently view each other's notes, annotations or to directly communicate with one another via video imaging." Kinney at 2:15-29.

Each of the computer-controlled playback systems includes a graphical user interface 125 and external transport controller 180, either or both of which constitute the claimed "controller."

"Each workstation may be equipped with a Cosmo Compress™ option board. Cosmo Compress allows the media playback engine 110 to compress and decompress the movies in a fast, efficient manner. If Cosmo Compress is not installed, compression and decompression is performed in software. The Indy workstation is connected to monitor 140. A graphical user interface (GUI) 125 can be displayed within monitor 140. GUI 125 provides icons and buttons that allow participants to control the viewing of a movie." Kinney at 3:65-4:6.

Exemplary Disclosures
"FIG. 3 illustrates a screen 310 of a workstation. Multiple windows are displayed, some of which display multiple icons. Also displayed is GUI 125 used in a preferred embodiment. GUI 125 includes a window 320 and a control panel 330. Window 320 has displayed therein a movie that can be viewed and controlled by a participant on one side of communication channel." Kinney at 4:64-5:3. 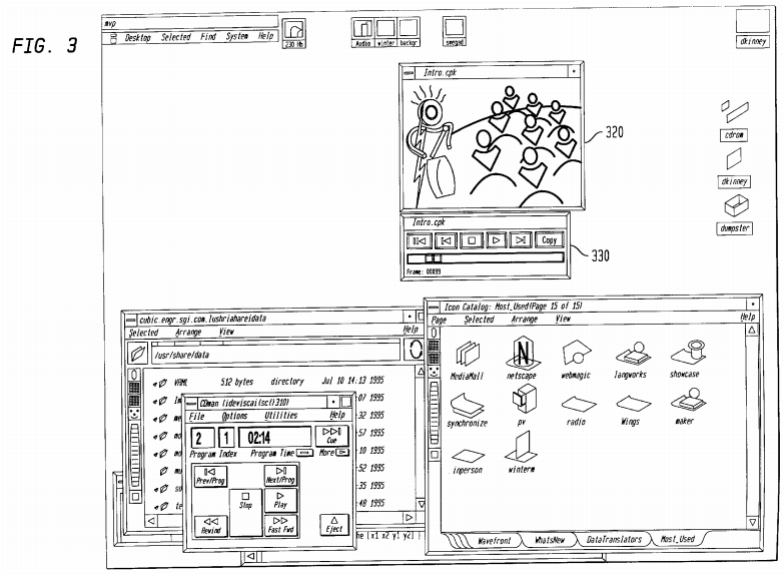   "FIG. 4 illustrates a larger view of the graphical user interface used in a preferred embodiment of the present invention to control playback of the movie displayed within window 320. Control panel 330 includes a plurality of playback buttons. A frame control button 440 is used to quickly advance to a particular frame within the movie. Frame control button 440 takes the form of a sliding button. A participant activates frame control button 440, as well as the other buttons, with the use of a keyboard, mouse or similar pointing device. This type of point and click technology is well known in the art. An alternate embodiment contemplates using an external jog-shuttle (shown in FIG. 1 as reference number 170) to control the speed and direction of the playback. Speed and direction could also be controlled graphically using sliding buttons or the like. Note that these embodiments are only illustrative, and other embodiments for controlling speed and direction are contemplated by the present invention." Kinney at 5:4-20

Exemplary Disclosures
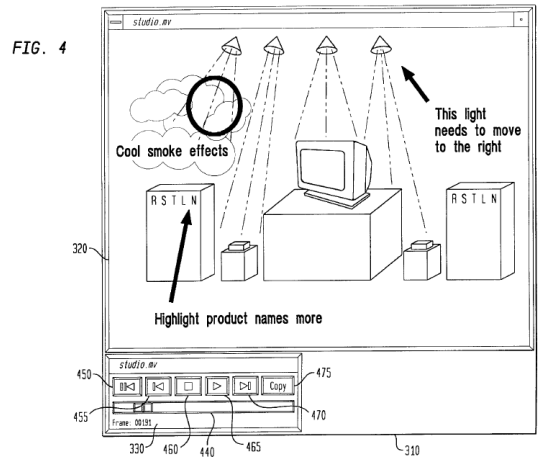 "Transport control logic 170 allows a participant to control the actions of a movie. Specific actions that the participant can initiate are, for example, normal playback, stop, fast and slow reverse, fast and slow forward, and seek. Some of these actions will be described below. However, the present invention contemplates any action a participant can take in viewing and editing a movie, as would be apparent to a person skilled in the relevant art. In a preferred embodiment, participants trigger these actions via GUI 125." Kinney at 4:41-49. "Each participant in a shared playback session is able to receive input from local graphical user interface 125, external transport controller 180, or event from another participant over the network asynchronously. That is, movie playback occurs even while receiving input from any of these sources. This is shown generally in block 214." Kinney at 7:1-6. A participant in the shared playback session is able to receive input from any of the controllers associated with other participants over the network. "Each participant in a shared playback session is able to receive input from local graphical user interface 125, external transport controller 180, or event from another participant over the network asynchronously. That is, movie playback occurs even while receiving input from any of these sources. This is shown generally in block 214." Kinney at 7:1-6. "Block 216 is a decisional step that has two paths: a user event path and a network event path. Given participant 1 and participant 2, a user event is a local event generated by a participant I and received by the playback system used by participant 1. A network event is an event that is generated by participant 2 and received by the playback system of participant 1. In other words, a user event is local a network event is remote." Kinney at 7:7-14. A participant in the shared playback session may be a master or a slave. A participant can join a synchronized playback session upon receiving a "seek event" and, if the process is playing, a "play" event (i.e., the claimed "direction") from a controller associated with the master (over the LAN).

Exemplary Disclosures
"FIGS. 2A, 2B and 2C are flowcharts illustrating the actions of a participant participating in the synchronized viewing of a movie. A participant at a remote playback system wanting to join a synchronized playback session sends a hello event. This is shown in block 210. A master sends back a seek event and optionally a play event in response to the hello event. The "master" is the location that originally initiated the session or event. This step is shown in block 212. The seek event is required in order to advance the movie viewed by the participant at the remote system to the frame that all other participants are currently viewing. The play event is required if the movie is currently being played." Kinney at 6:55-67. "If block 266 determines that the event was not a hello event, an error is indicated, as shown in block 238. However, if the event was a hello event, flow continues to block 268. Block 268 determines whether the current process should respond to the hello event. In a preferred embodiment, the first participant is considered the "master" and therefore only the first participant responds to hello events. Otherwise, flow continues to block 270. Block 270 forwards a seek event to the participant that is joining the viewing session in order to synchronize the new participant with the other participants. Next, block 272 determines whether the movie is currently playing. If the movie is not playing, flow continues back to block 214. Otherwise, a play event is forwarded, along with the current play rate, to the new participant. Flow then continues back to block 214." Kinney at 8:8-22. Kinney Fig. 2C: 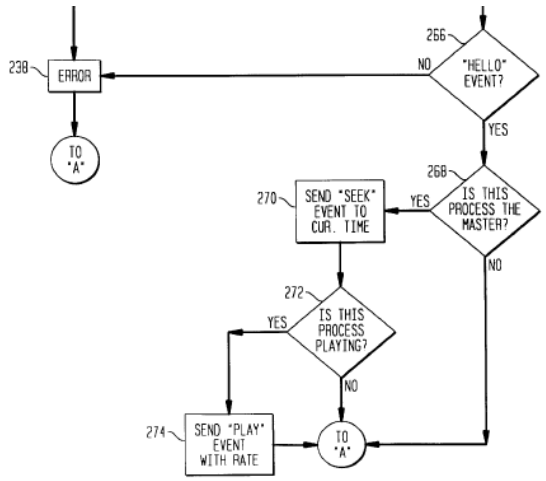   "A system and method for synchronized playback and control of a movie (also referred to as time-based digital media). The movie includes one or more data structures, called "tracks", containing time-based data that is intended to be played together in a synchronized manner at a given rate of speed. The system and method allows two or more participants that are operating on different playback systems at different locations to simultaneously view and control the playing of the movie. The image on each participants display is kept synchronized with the others, providing a virtual co-location." Kinney at Abstract.

Exemplary Disclosures
"The present invention relates to computer-based methods and apparatus for interactively processing digital movies and, in particular, to technology for supporting such interactive processing in a synchronized, collaborative manner among multiple participants across a wide-area network." Kinney at 1:9-13. "If decisional block 216 determines that the event is a network event, flow moves to decisional block 226. Decisional block 226 determines whether the event is a seek event. If the event is a seek event, block 228 advances the movie to the specified frame. Flow then continues back to block 214. If the event is not a seek event, flow continues to decisional block 246. Decisional block 246 determines whether the event is a stop event. Block 248 stops the movie if the event is a stop event as proceeds back to block 214. Otherwise, flow continues to decisional block 254." Kinney at 7:55-64. "Decisional block 254 determines whether the event is a play event. Flow continues to block 256 if the event is a play event. Block 256 starts the play of the movie at the specified frame rate. Flow then continues back to block 214. If the event is not a play event then flow continues to block 264. Block 264 determines whether the event was a goodbye event. A goodbye event triggers the removal of the sender from the active list of participants, as shown in block 276. Otherwise, block 266 determines whether the event is a hello event." Kinney at 7:65-8:7. "11. The system of claim 10, wherein said communication channel is a local area network." Kinney at claim 11. *See also* Kinney at Figs. 2A-2B. <u>US20020072816 ("Shdema") (GOOG-SONOSITC-PA-00019027)</u> "Audio system for operating a plurality of speakers, the audio system including an audio management system connected to the speakers via a network, a user interface connected to the audio management system, and an audio source cluster connected to the audio management system, wherein the audio management system operates the speakers by transmitting audio streams and speaker audio control data to the network, and wherein the audio management system determines the speaker audio control data, according to a plurality of parameters." Shdema at Abstract. Shdema at Fig. 6:

Exemplary Disclosures

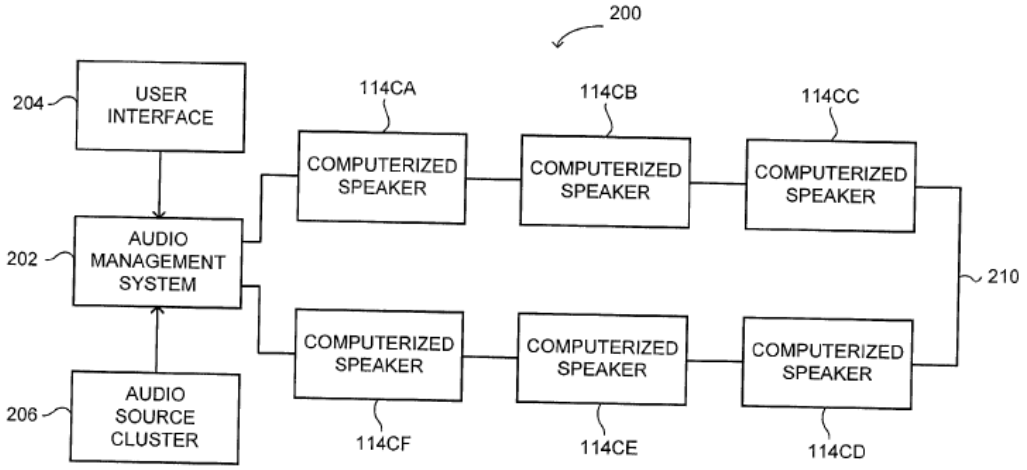

FIG. 6

"Systems and methods for broadcasting an audio program from a set of remote speakers are known in the art. Such audio systems generally include an audio data source, a system for processing and selecting an audio signal, an amplifier for amplifying the selected signal and a plurality of speakers for reproducing the amplified signal at an audio device. Traditionally, the audio program system configures with multiple speakers cabled together. This configuration may include multiple networks or multiple zones with a common signal per zone." Shdema at [0002].

"A method and apparatus for configuring plural multi-media audio cards as a local area network, are described in U.S. Pat. No. 5,519,641 issued to Beers et al., and entitled 'Method and Apparatus for Configuring Plural Multimedia Audio Cards as a Local Area Network'. According to this method, a plurality of computers can be configured as a LAN (local area network) through the use of an audio card, cables, and a communication protocol. This system makes use of the line-in/line-out connectors for each right and left stereo channel of the audio card, to provide a communication network. The audio and data information can be transmitted simultaneously over the local area network. The distributed computers are connected in a master/slave configuration. All line-in ports of the slave systems are connected together, and the master system lineout port is connected to the slave systems line-in ports, for each channel. All lineout ports of the slave systems are connected together and the master system line-in port is connected to the slave systems lineout ports, for each channel. Only one slave lineout can actively transmit data at any time. A communication protocol is provided wherein the master system provides a clock signal on the control channel. During communication, if either the master or slave system recognize their address on the packet received on the line-in channel, then the information is decoded and processed by the digital signal processor on the audio card. The audio data can be output to the system as a play file or the like, while the data information may be sent directly to the host CPU in the system, either to the master or the slave, for display on the computer screen. This system also provides a multi-tasking program for controlling an onboard processor on the

Exemplary Disclosures
audio card. This will allow the simultaneous transmission and/or receipt of audio and data information and audio play or record by the systems interconnected in the local area network audio configuration." Shdema at [0008]. "It is an object of the present invention to provide a novel method and system for operating a plurality of digital speakers connected to a digital audio network. In accordance with the present invention, there is thus provided an audio system for operating a plurality of speakers. The audio system includes an audio management system, a user interface and an audio source cluster. The audio management system is connected to the speakers via a network. The audio management system is connected to the user interface and to the audio source cluster. The audio management system operates the speakers by transmitting audio streams and speaker audio control data to the network. The audio management system determines the speaker audio control data, according to a plurality of parameters." Shdema at [0010]. "In accordance with another aspect of the present invention, there is thus provided a method for operating an audio system. The audio system includes an audio management system, a user interface, an audio source cluster and a plurality of speakers. The speakers are connected to the audio management system via a network, and the audio management system is connected to the user interface and to the audio source cluster. The method includes the steps of determining network audio control data, conforming audio streams, encoding the conformed audio streams and determining speaker audio control data. The network audio control data is determined according to automatic predetermined parameters and user defined parameters. The audio streams are conformed according to the network audio control parameters. The speaker audio control data is determined according to the automatic predetermined parameters and the user defined parameters." Shdema at [0011]. "The present invention overcomes the disadvantages of the prior art by providing a digital networked audio system and a method for operating the same, with digital speakers, which include internal and ambient dynamic audio processing, amplification and psycho-acoustic manipulation (i.e., creating a sensation of acoustic depth through surround sound techniques) of the received audio stream. The invention preferably makes use of a digital communication link, which is based on digital isochronous communication concept. A digital isochronous communication channel guarantees predetermined bandwidth (for example, at least at 44.1 k-bit/sec) for each network address (i.e., digital speaker device) in the network. The use of digital isochronous communication eliminates any noticeable delay in network traffic. It will be appreciated by those skilled in the art that such delay exists when using conventional networking protocols such as Voice Over IP (VoIP), and the like." Shdema at [0028]. "The digital speakers are a set of network devices, identified by a unique address, and can attach/detach themselves without requiring reboot of the network, or re-initialization. This is due to the fact that isochronous protocols funnel the information regardless of the existence of the network device as a network link. Hence, such a communication channel does not exhibit packet loss. The digital samples can be packetized (as in Internet Protocols) or can be transmitted without packet overhead (e.g., Header/Footer/Parity). It is noted that the present invention can

Exemplary Disclosures
make further use of conventional networking protocols such as Ethernet, ATM, and the like, for conveying control data between the network devices and the audio management system." Shdema at [0029]. *See also* Shdema at [0012] – [0014]. <u>US6757517 ("Chang") (GOOG-SONOSITC-PA-00013471)</u> "The present invention details a novel application of wireless networking and digital music technologies to achieve coordinated and synchronized music playback among peer listeners connected by wireless ad-hoc networks. Two or more listeners in local proximity allowed by short-range wireless transmission can participate and listen to the same song at the same time. Moreover, the present invention allows listeners in the transmission range to discover each other through profile matching. A high matching score may indicate similar preference or taste to a certain music style thereby easily locating mutual interests, which would not have been possible." Chang at Abstract. "The present invention relates to a method and an apparatus for music playback. More particularly, the present invention relates to a method and an apparatus for coordinated and synchronized music playback in local spatial proximity with wireless ad hoc networks." Chang at 1:9-13. "The present invention details a novel application of wireless networking and digital music technologies to achieve coordinated and synchronized music playback among peer listeners connected by wireless ad-hoc networks. Two or more listeners in local proximity allowed by short-range wireless transmission can participate and listen to the same song at the same time. Moreover, the present invention allows listeners in the transmission range to discover each other through profile matching. A high matching score may indicate similar preference or taste to a certain music style thereby easily locating mutual interests, which would not have been possible." Chang at 1:51-62. "As embodied and broadly described herein, the invention provides a method and an apparatus for coordinated and synchronized music playback in local spatial proximity with wireless ad hoc networks. The playback/listening system includes at least two or more playback/listening apparatus used respectively by at least two or more users. The playback/listening apparatus enhanced with profile matching functionality comprises four key components: a wireless transceiver, a random access controller, a profile storage and matching unit, and a music playback unit. The playback/listening apparatus can operate in at least two modes, listening mode and advertising mode, for profile matching. These two modes constitute two basic and necessary functionality." Chang at 1:63-2:9. "The method for coordinated and synchronized music playback in local spatial proximity with wireless ad hoc networks includes the following steps: establishing a wireless ad-hoc network between at least a first listening apparatus used by the first user and a second listening apparatus

Exemplary Disclosures
used by the second user; sending a first message from the first apparatus to a public channel; scanning the public channel and receiving the first message to the second apparatus; responding to the first apparatus by sending a second message from the second apparatus to direct the first apparatus to a private channel; sending a first profile from the first apparatus to the private channel; performing matching evaluation between the first profile and a second profile of the second apparatus in the second apparatus based on a specific criterion; sending the second profile to the first apparatus; performing matching evaluation between the second profile and the first profile in the first apparatus; selecting a song; synchronizing playing the song; scanning the public channel and receiving the first message to a third apparatus used by a third user over the wireless ad-hoc network; responding to the third apparatus by sending a third message from the first apparatus to direct the third apparatus to the private channel; and synchronizing playing the song in the apparatuses." Chang at 2:10-32. "Upon receiving the response to its announcement message, the remote party sends its profile through the private channel (208). The profile matching unit at the local apparatus (used by the local party) then performs matching evaluation. If it is a good match, the local apparatus sends its own profile to the remote party for verification and confirmation (210). The remote party performs its matching and if it agrees to proceed, sends out confirmation and selects a song that appears in both profiles to play. Both parties then synchronize and play the selected song at the same time (212). The aforementioned step can be referred as 'local playback'. However, if the selected song is present in only one party (i.e. either the local or the remote party), the selected song needs to be transmitted to another party in order to be played at the same time, thus referring as 'radio-in playback' hereafter. It depends on the available bandwidth of the wireless, ad-hoc network to decide whether local playback or radio-in playback can be applied. In the listening mode, the system passively waits for new announcements. The above flow diagram applies equally to two party-linking as well as multi-party linking." Chang at 4:10-30. "When two or more devices (referred as the playback group) are participating in synchronized playback, a new apparatus (using by a new party) may join by responding to the announcement message from the advertising apparatus. The interactions between the new apparatus and the advertising apparatus follow the same procedure illustrated in FIG. 3. There is one more step after (310). In this step, the advertising apparatus, which is participating in the playback, sends out a channel reset message to the newly joined device. The channel reset message contains the channel number shared by the playback group. The newly joined device then switches and listens to the shared channel number in order to synchronize its playback with the playback group. At this point, the newly joined device is part of the playback group. A playback group may be formed by inviting new devices one at a time following the above procedure." Chang at 4:65-5:14. <u>US6778493 ("Ishii") (GOOG-SONOSITC-PA-00016346)</u> "A system for transmitting and synchronizing real-time multimedia content includes a multimedia server for generating a multimedia packet; a packet-based communication network connected to the multimedia server for receiving multimedia packets therefrom; the network

Exemplary Disclosures
having multiple routers therein to route the multimedia packets to plural destinations; a mechanism for inserting total delay information (TDI) into the multimedia packets, wherein the TDI includes total end-to-end delay (TED) and cumulative network delay (CND); and plural multimedia receivers for receiving the multimedia packets having TDI therein, wherein each multimedia receiver includes a buffer, a sequencing mechanism, and a playing mechanism for playing retrieved, sequenced multimedia packets at time TED after the multimedia packet has been transmitted by the multimedia server. A method of transmitting and synchronizing real-time multimedia content includes loading multimedia audio/visual into plural multimedia packets; inserting total delay information (TDI) into at least one of the multimedia packets, wherein TDI includes total end-to-end delay (TED) and cumulative network delay (CND); transmitting the multimedia packets to plural multimedia receivers over a packet-based network in a play sequence; and playing the multimedia packets at each receiver at time TED." Ishii at Abstract. "This invention relates to multimedia networks, and specifically to the synchronization of multicast distributed media content when played by multiple multimedia devices, e.g., monitors and audio systems." Ishii at 1:8-11. "In some situations, such as at conventions and in exhibition halls, it is required to play the same video contents synchronized at multiple video monitors. Generally, it is also required to synchronize audio and video between separately located monitors and speakers. Current real-time media transmission technology allows transferring an audio/video stream over non-guaranteed quality of service (QoS) packet networks with reasonable quality and at a lower cost than provided by higher quality networks. Thus, there will be a demand for playing multimedia contents, delivered to a plurality of receivers over packet network, in synchronized manner." Ishii at 1:14-25. "Synchronization and transmission of multicast multimedia, particularly over packet-based systems is an efficient and inexpensive techniques for distributing information. Prior art systems simply do not consider the problems associated with synchronizing and transmitting a multimedia data stream, from one or more sources, over a packet-based system, to multiple receivers. Although there exist a number of technologies that enable a plurality of correlated media streams, transmitted from different locations, to be played at single receiver in a synchronized manner, the known prior art does not allow media streams generated by a single source, or multiple sources, to be multicast over a packet-based network to be played synchronously at multiple locations. This invention provides a system and method to transmit and synchronously play the same audio/video stream at the different locations, and to eliminate transmission of a multimedia packet when it is apparent that the multimedia packet will not be played at its destination." Ishii at 5:15-33. "Referring now to FIG. 4, a content synchronized multimedia transmission system constructed according to the invention is depicted generally at 60. System 60 includes a multimedia server 62, which has the means to insert TED and CND information, which is defined and described later herein, into each multimedia packet 64 that passes therethrough. A packet network 66

Exemplary Disclosures
includes two routers, 68, 70, although many more routers are likely present in such a generalized network. Router 68 is connected to a local area network (LAN) 72, which includes a gateway 74 and routers 76, 78. Multimedia receivers 80, 82 and 84 are connecter to LAN 72." Ishii at 5:34-45. "In the embodiment shown in FIG. 4, server 62 and all the routers included in packet network 66 and LAN 72 for the multicast group supports TED and CND. As depicted in FIG. 4, all of the multimedia receivers in the multicast group are in a local area network (LAN), however, a multimedia receiver may also be connected to a router in packet network 66. A multimedia server does not have to include special hardware or software to insert TDI into the multimedia packets, as described above. Instead, a gateway, which connects the LAN to the (public) packet network, generates TDI from TED and CND for multimedia packets received from the server. The gateway must be capable of generating the value of TED, and must be supplied with the packet rate. The routers and the receivers in the LAN may perform the same function. Consequently, the invention may be implemented even if the entire packet network does not support the method presented here. Put another way, the means for inserting TDI may be provided by a multimedia server, a router, or a gateway." Ishii at 7:1-19. "4. The system of claim 1 which further includes a local area network (LAN) located between said packet-based network and at least some of said multimedia receivers, wherein said LAN includes a gateway." Ishii at claim 4. See also Ishii at claims 12 and 19. <u>US7162315 ("Gilbert") (GOOG-SONOSITC-PA-00015803)</u> "A method and apparatus for audio compensation is disclosed. If audio input components and audio output components are not driven by a common clock (e.g., input and output systems are separated by a network, different clock signals in a single computer system), input and output sampling rates may differ. Also, network routing of the digital audio data may not be consistent. Both clock synchronization and routing considerations can affect the digital audio output. To compensate for the timing irregularities caused by clock synchronization differences and/or routing changes, the present invention adjusts periods of silence in the digital audio data being output. The present invention thereby provides an improved digital audio output." Gilbert at Abtract. "The present invention relates to communication of digital audio data. More particularly, the present invention relates to modification of digital audio playback to compensate for timing differences." Gilbert at 1:9-12. "The present invention provides a method and apparatus for time compensation of digital audio data. If audio input components and audio output components are not driven by a common clock (e.g., input and output systems are separated by a network, different clock signals in a single computer system), input and output rates may differ. Also, network routing of the digital audio data may not be consistent. Both clock synchronization and routing considerations can affect the digital audio output. To compensate for the timing irregularities caused by clock

Exemplary Disclosures
synchronization differences and/or routing changes, the present invention adjusts periods of silence in the digital audio data being output. The present invention thereby provides an improved digital audio output." Gilbert at 2:32-45. "Network 200 provides an interconnection between multiple devices sending and/or receiving digital audio data. In one embodiment, network 200 is the Internet; however, network 200 can be any type of wide area network (WAN), local area network (LAN), or other interconnection of multiple devices. In one embodiment, network 200 is a packet switched network where data is communicated over network 200 in the form of packets. Other network protocols can also be used." Gilbert at 3:45-53. <u>US20050131558A1 ("Braithwaite") ("GOOG-SONOSITC-PA-00012990")</u> "An audio distribution network system (20) allowing an audio distribution system to be created that is integrated with the home automation system into a home network that permits vocal feedback, status and even control with the audio through network speakers (100)." Braithwaite at Abstract. "An audio distribution network system 20 (FIG. 1) includes a plurality of speaker node units 100 which are coupled to a Transport Control Protocol/Internet Protocol (TCP/IP) based network backbone 200. Also coupled to the network backbone 200 are networked audio source node devices 300, an Internet service interface 400, and a Legacy converter/controller 600. Legacy sources 500 provide analog or digital linear PCM_(Pulse Coded Modulation)_audio to be converted into a packet switched digital_coding for transport across the network. They will also provide analog video which will be used for control status feedback, as well as conversion to a packet switched_digital coding for transport across the network. In addition, the Legacy sources 500_will also receive IR or serial commands from the converter/controller 600 which also communicates with a Legacy home control network 700. Some legacy sources_500 may also provide serial communications to the converter/controller 600." Braithwaite at [0016]. "The system 20 is a collection of independent computers or other intelligent devices that communicate with one another over the shared TCP/IP network 200. For example, the system 20 can be part of the Internet linked networks that are worldwide in scope and facilitate data communication services such as remote login, file transfer, electronic mail, the World Wide Web and newsgroups, or for security reasons part of a home intranet network utilizing Internet-type tools, but available only within that home. The home intranet is usually connected to the Internet via an Internet interface 400. Intranets are often referred to as LANs (Local Area Networks)." Braithwaite at [0018]. "The home network backbone 200 communicates using the TCP/IP network protocol consisting of standards that allow network members to communicate. A protocol defines how computers and other intelligent devices will identify one another on a network, the form that the data should take in transit, and how this information is processed once it reaches its final destination. Protocols also define procedures for handling lost or damaged transmissions or "packets". The

Exemplary Disclosures
TCP/IP network protocol is made up of layers of protocols, each building on the protocol layers below it. The basic layer is the physical layer protocol that defines how the data is physically sent through the physical communication medium, such as Thickwire, thin coax, unshielded twisted pair, fiber optic, telephone cable, fiber optic cable, RF, IR, power line wires, etc. Those physical media requiring an actual physical connection of some type, such as Thickwire, thin coax, unshielded twisted pair, fiber optic, power line, telephone cable, or fiber optic cable, to the network device are called wired media Those physical media not requiring an actual physical wire connection of any type to the network device, such as RF and IR, are called wireless media. A TCP/IP home network can be totally wired, totally wireless, or a mix of wireless and wired. A TCP/IP home network is not limited to a single physical communication medium. Different physical communication media can be connected together by bridging components to create a unified communication network. Each network physical media has its physical layer protocol that defines the form that the data should take in transit on that particular physical media. The bridging component enables the transfer and conversion of communication on one physical medium and its physical layer protocol to a different physical media and its physical layer protocol. Bridging components also may provide a proxy from one network to the other, this will be common among UpnP_V1 to V2, and with Ipv6 to Ipv4 (Internet Protocol version 6, 4). Common physical layer LAN technology in use today include Ethernet, Token Ring, Fast Ethernet, Fiber Distributed Data Interface (FDDI), Asynchronous Transfer Mode (ATM) and LocalTalk. Physical layer protocols that are very similar over slightly different physical media are sometimes referred to be the same name but of different type. An example are the three common types of Fast Ethernet: 100 BASE-TX for use with level 5 UTP cable, 100BASE-FX for use with fiber-optic cable, and 100BASE-T4 which utilizes an extra two wires for use with level 3 UTP cable. The TCP/IP protocol layers are well known and will not be further described in greater detail." Braithwaite at [0019]. <u>US20030050058 ("Walsh") (GOOG-SONOSITC-PA-00022094)</u> "A method and system for establishing a dynamic content delivery system (DCDS) is disclosed. In one embodiment, a Bluetooth enabled mobile communications unit is used to communicate with a server in order to make a request for the delivery of specific content, such as a song, video, or the like, to a separate output device, such as a loudspeaker, a display screen, or the like. In another embodiment the content is delivered back to the requesting mobile communications device. In some embodiments, hybrid networks may be used for requesting and delivering content. A narrowband, bi-directional, unicast network may be used for requesting content and acknowledging the requests, while a broadband, unidirectional, multicast network may be used to deliver the requested content to the requesting client device. The order in which the content is delivered may be modified by user requests according to a predetermined algorithm." Walsh at Abstract. "The invention relates to wireless communications. More specifically, the invention relates to a method and system for requesting media content over one network, and delivering media content over another network." Walsh at [0001].

Exemplary Disclosures
"FIG. 1 illustrates one embodiment of the invention where Bluetooth (BT) radio technology is used in the DCDS to allow users to request audio content using each user's individual Bluetooth-enabled mobile communications device. However, the invention is not limited to Bluetooth devices. For instance, HomeRF, WLAN, cellular telephone networks, or HyperLAN2 may be used as well. In FIG. 1, there is a location 101 that provides the DCDS for use by users (listeners). The location 101 may be a commercial establishment, such as a restaurant or pub, a store, or the like, or it may be any other location in which music is played. For purposes of illustration only, location 101 is referred to herein as a restaurant." Walsh at [0042]. "In one embodiment of the invention, the DCDS is not limited to a single location 101, but rather is provided over hybrid networks to a wider audience than the single location embodiment described above. This embodiment uses a broadband, unidirectional access network and a narrowband, bi-directional access network to provide DCDS services. For instance, the DCDS may use a bi-directional, narrowband network such as a General Packet switched Radio System (GPRS) or GSM cellular network to receive and acknowledge requests for content from users, and use a unidirectional broadband network to deliver the requested content to one or more users. Examples of uni-directional broadband networks that may be used include Terrestrial Digital Video Broadcasting (DVB-T), DVB-S, DAB, ATSC, ISDB-T, WLAN, 3G (e.g., UMTS), Bluetooth, and HyperLAN2 networks. In addition, any network (bi-directional or unidirectional) supporting multicast (e.g., WLAN) may act as a logical unidirectional network. It should also be appreciated that the narrowband and broadband networks may be different logical networks within the same physical network, such as in WLAN or cable networks. In addition, the invention may be performed using conventional, hardwired networks as well as wireless networks. For instance, a traditional hardwired PSTN may be used as the narrowband, bi-directional network." Walsh at [0081]. <u>US20030002849 ("Lord") (GOOG-SONOSITC-PA-00016523)</u> "Once User 1 selects the name on the buddy list that is associated with User 2, a message appears on User 2's screen that User 1 wants to watch television in a synchronized manner. User 2 is given the option of accepting or declining the offer made by User 1. If and when User 2 accepts the offer made by User 1, all personal video recorder commands that either of them enters will affect the other's personal video recorder. Alternatively, the system may be configured to have one user be the master and the other one the slave. The first screen that both users are presented with may be a screen similar to that shown in FIG. 7, listing all of the shows that the two users have in common, including a live television option. To ensure that the two personal video recorders stay in synchronization, the personal video recorder that initiated the synchronized viewing may send out a status message after every command is sent and received, and at a predetermined rate, e.g., once every minute, if no commands have occurred. The status message will preferably include an indication of the program being watched, the time or frame into the program, and the current mode of watching (e.g., normal play, fast forward, pause, etc.)." Lord at [0031].

Exemplary Disclosures
US7076204 ("Richenstein") (GOOG-SONOSITC-PA-00020635) "A wireless transmission device for communicating a plurality of audio streams to remote devices may include a plurality of inputs for receiving a plurality of digital audio streams, a combiner connected to the inputs for combining control codes and the received audio streams in a predetermined format to form a signal wherein the control codes for controlling the operation of a remote device equipped for processing the signal to extract the audio streams therefrom in accordance with the predetermined format, and a transmitter connected to the combiner to transmit the signal for reception by the remote device. The transmitter may include an infra-red light emitter for transmitting the signal as an infra-red light signal. A wireless transmission system may include wireless transmitter for transmitting a signal, a combiner in the wireless transmitter for combining a plurality of audio streams with one or more control codes in the signal being transmitted; and a wireless receiver for producing audio for a user from the signal, the wireless receiver responsive to selection by the user of one or more of the plurality audio streams in the signal to produce audio for the user therefrom, the wireless receiver responsive to the one or more control codes in the signal for controlling other operations of the remote receiver." Richenstein at Abstract. "In a first aspect, a wireless transmission device is disclosed for communicating a plurality of audio streams to remote devices, including a plurality of inputs for receiving a plurality of digital audio streams, a combiner connected to the inputs for combining control codes and the received audio streams in a predetermined format to form a signal, the control codes for controlling the operation of a remote device equipped for processing the signal to extract the audio streams therefrom in accordance with the predetermined format, and a transmitter connected to the combiner to transmit the signal for reception by the remote device." Richenstein at 1:34-44. "Another function that may be provided by decoder 74 includes updating the operation of headset receiver unit 14. In particular, upon recognition of an appropriate update code by code detector 106, the data in data section 88 from one or more subsequent transmitted signals or packets 86 may be applied by code detector 106 to an appropriate memory in headset receiver unit 14, such as rewritable memory 116. The data stored in memory 116 may then be used to control subsequent operations of headset receiver unit 14 by, for example, decoder 74." Richenstein at 10:8-17. "The update function described above with respect to FIG. 4 may be used to revise or update headset receiver unit 14 for operating modes that vary the processing of data in multiple channel format, such as variations in the 5.1 or 7.1 audio format. Other uses of the update format may be in automatically selecting the language or age appropriate format used on various audio channels to control what is provided to a particular listener." Richenstein at 10:18-25. "With continued reference to FIG. 21, remote controller 936 includes IR receiver/transmitter 984 for two-way communication with audio device 34 via IR receiver/transmitter 806 and, optionally, a repeater included in IR receiver/transmitter 926. Remote controller 936 may provide any one or more of a plurality of controls, including but not limited to key pads,

Exemplary Disclosures
joysticks, push buttons, toggles switches, and voice command controls, and may further provide sensory feedback such as audio or tactile/vibrations. Remote controller 936 may be used for a variety of purposes, including accessing and controlling cellular telephone 805 as previously described. Remote controller 936 may also be used to access and control video game player 922 to play a video game displayed on video display(s) 838, with the game audio track played through headphones 80, 980. Remote controller 936 may further be used to control video display 838 and adjust display functions and controls, to control DVD player 803 to display a movie on video display 838 and control its functions (e.g. pause, stop, fast forward), to control trunk-mounted CD changer 950, to request telemetry data from vehicle CPU 924 to display on video display 838, or to control other vehicle 900 functions such as locking/unlocking doors and opening/closing windows. Two or more remote controllers 936 may be provided in vehicle 900 to allow two or more users 933, 935 to play a video game, displayed individually on multiple, respective video displays 838. Each remote controller 936 may access audio device 34 and video game player 922 through a separate communication channel and thus enable the game player to provide different, individual video and audio streams to each respective user 933, 935 through the respective video displays 838 and headphones 980, 80. Headphones 80, 980 may further be programmed to receive an IR signal from remote controller 936 to select another channel, or to automatically select the appropriate channel based upon the function selected by the user (e.g. play a video game, watch a DVD)." Richenstein at 31:4-39. "In this embodiment, audio device 34 is not required to be the central control unit of communication system 991, which instead can be a distributed system wherein the IR modules 992 enable any IR device inside vehicle 988 to interface with any other IR device or with any other device that is connected to data bus 990. By properly addressing and identifying the data transmitted over data bus 990 (e.g. via information placed in the header of each data block or data packet), each device connected to the data bus can identify the channel of data it is required to decode and use, and may optionally be assigned a unique address to which the data it is intended to receive can be uniquely addressed, in accordance with the principles set forth elsewhere herein (e.g. through the unique identifier ID described with reference to FIG. 10). This hybrid network is easily expandable as no additional wiring is needed to connect additional devices to the network; instead, each new device can be equipped with an IR transmitter/receiver that allows the device to connect to the network through one of the wireless interfaces." Richenstein at 33:7-12. <u>US7206367 ("Moore") (GOOG-SONOSITC-PA-00020689)</u> "Furthermore, it will be appreciated by those skilled in the art that the present invention works suitably well with a wide variety of computer networks over numerous topologies, so long as network 120 connects the distributed network speakers 150 0-n to controller 140. For example, other public or private communication networks that can be used for network 120 include Local Area Networks (LANs), Wide Area Networks (WANs), intranets, and Virtual Private Networks (VPNs). Generally and although not shown explicitly, these types of communication networks can in turn be communicatively coupled to other networks comprising storage devices, server

Exemplary Disclosures
computers, databases, and client computers that are communicatively coupled to other computers and storage devices." Moore at 7:47-60. "Computer 130, controller 140, and network speakers 150 0-n, of system 100 or an arrangement of controller 140 and network speakers 150 0-n may beneficially utilize the present invention, and may contain an embodiment of the process steps and modules of the present invention in the form of a computer program. Alternatively, the process steps and modules of the present invention could be embodied in firmware or hardware, and when embodied in software, could be downloaded to reside on and be operated from different platforms used by real-time network operating systems. In those implementations where computer 130 is not utilized, the present invention works suitably well with the audio controller and the network speakers performing the processes described herein." Moore at 8:9-22. "As shown in FIG. 2B, the GPS receiver 211 provides time data 209 to controller 216. The time data 209 is the out-of-band signal for this particular embodiment. According to one implementation, when a single satellite receiver is used, an inexpensive receiver may be utilized so as to minimize the costs of the playback destination device 200′ . While controller 216 receives time data 209 from receiver 211, controller 216 also receives decoded information in the nature of the time sequence number from the demodulator/NIC 206. In general, the information received by controller 216 from demodulator/NIC 206 is a standard data frame, and not an out-of-band signal." Moore at 9:13-24. "FIG. 3 illustrates a block diagram of an alternative embodiment of a destination device 300 in accordance with the present invention. The destination device 300 as shown is a network speaker connected to other network devices by network interface 202 (e.g., a wall receptacle, if the network wiring is through the power line). The line 204 transmits: the data received from network 120 to a demodulator and NIC 206; and time synchronization signals to a detector 308. In the alternative embodiment shown, the time synchronization signals received from network 120 are un-modulated, so detector 308 determines whether the time synchronization signal is received at the proper frequency. For example, detector 308 may simply perform a Fast Fourier Process (FFP) on the time synchronization signals. In this embodiment, the sequence number is extracted through the demodulator and NIC 206. The time synchronization signals are received at a detector 308 and then input to a local clock 210 and a controller 216. Alternatively, a global positioning satellite (GPS) receiver 211 can be substituted for the local clock 210 as a source of time data for the controller 216. The resulting arrangement using GPS receiver 211 would be similar to the embodiment previously described in FIG. 2B The controller 216 also receives the demodulated data from the demodulator and NIC 206. The controller 216 accesses a memory 212 with the controller instruction code, and a buffer for the data produced by the demodulator and NIC 206. The controller 216 outputs multimedia data (e.g., audio data, video data, and so forth) to a D/A converter 218, which produces an input for an amplifier 220 to send to a speaker 222." Moore at 9:58-10:20. "FIG. 4 illustrates a block diagram of one embodiment of a source device 140 in the nature of an audio transmitter controller 400. In the embodiment shown, a time synchronization modulator

Exemplary Disclosures
406 is connected by media 408 (e.g., network wiring, or a wall receptacle, if the network wiring is through the power lines) to network 120 by link 426. The time synchronization signals can be synchronized with the output of a local clock 404. The output of the modulator 406 and the local clock 404 are available to a microprocessor 414 over links 422 and 438, respectively. The microprocessor 414 accesses a memory 416 with the microprocessor instruction code through link 430. The instruction code is used to determine the content fetched from memory 410. If the data is to be transmitted from the controller 400 to network 120, microprocessor 414 transfers the data to be modulated in NIC 412 and on to media 408. Media 408 is communicatively coupled to modulator 406 via link 427. By doing so, modulated time synchronization signals are transmitted from modulator 406 through media 408 onto network 120. With this described embodiment, media 408 can be embodied as a power line." Moore at 10:21-41. "The present invention may be modified to work suitably well with wireless networks that transmit the synchronization pulses and data on different media than the home network. The synchronization pulses and data could be transmitted via infrared (IR). This would likely be more cost-effective than transmitting in a different band on the home network. However, the use of IR requires direct lines of sight between the networked speakers and the audio controller. Furthermore, IR remote controls could interfere with the IR synchronization signal, or the synchronization signal could interfere with systems controlled by the IR remote. Alternative preferred embodiments use radio-frequency (RF) transmissions to transmit the synchronization pulse. This solves the problems the IR embodiments have with line-of-sight restrictions. However, a radio-frequency embodiment is likely to be more expensive than an IR embodiment. Furthermore, the selection of a RF band with minimal interference would need to be selected, and the use of that RF band would also have to be allowed by the Federal Communications Commission (FCC), especially for use in consumer electronic devices." Moore at 10:56-11:9. "FIG. 6 illustrates an example for implementing a data packet 600 transmitted from a source device (e.g., controller 140) to a destination device (e.g., network speaker 150 0-n) in accordance with the present invention. The data packet 600 includes a pre-amble 602 generally representing specific information concerning the modulation technique. For example, this information may include the location of the bit boundaries for performing modulation. Data packet 600 also includes a sequence number 604 indicating a point of reference for when a networked speaker should play particular content transmitted from the controller. Also data packet 600 may optionally include a bit field 606 for error checking. For example, bit field 606 may represent a cyclic redundancy code (CRC) to detect bit errors from data corruption. Also, data packet 600 may include an optional bit field 608 with trailer or filler bits." Moore at 11:38-53. "Additional details about the synchronization signal transmitted by the audio controller (see FIG. 1) and received by the networked speakers 150 0-n are now discussed. In one example, the synchronization signal is a short, modulated pulse with modulated data containing a sequence number. Almost any modulation can be used (e.g., QAM, ODFM, CODFM, DFM, PSK, BPSK, QPSK, and so forth, discussed below in more detail). The modulation used can be selected for simplicity of implementation. Preferably, the modulation is the same modulation as the network data modulation, if that allows sharing of hardware and software. The synchronization pulses

Exemplary Disclosures
are transmitted at regular intervals by the audio controller 140, and each pulse has a sequence number that is incremented at transmission time. In the embodiment where devices 150 are network speakers, each network speaker adjusts its local clock using a phase-locked-loop (PLL) driven by the synchronization pulse." Moore at 12:39-55. *See also* Moore Fig. 1. <u>Yamaha, MusicCAST: Digital Audio Terminal MCX-A10, Owner's Manual (GOOG-SONOSITC-PA-00022337)</u> "The MusicCAST server stores all music data used in your MusicCAST system. The MusicCAST client does not store or record any music data. Your MusicCAST client uses a Local Area Network (LAN) to transmit and receive data from the MusicCAST server, which it then plays back as music. The MusicCAST system can use both wired and wireless network connections to transmit music data. Both types of connections transmit the same data. The wireless network in your MusicCAST system uses high frequency radio signals to transmit data. You do not need a physical connection between your MusicCAST server and clients to listen to music over a wireless network, but you need to place all clients in fairly close proximity to the server for them to work properly: 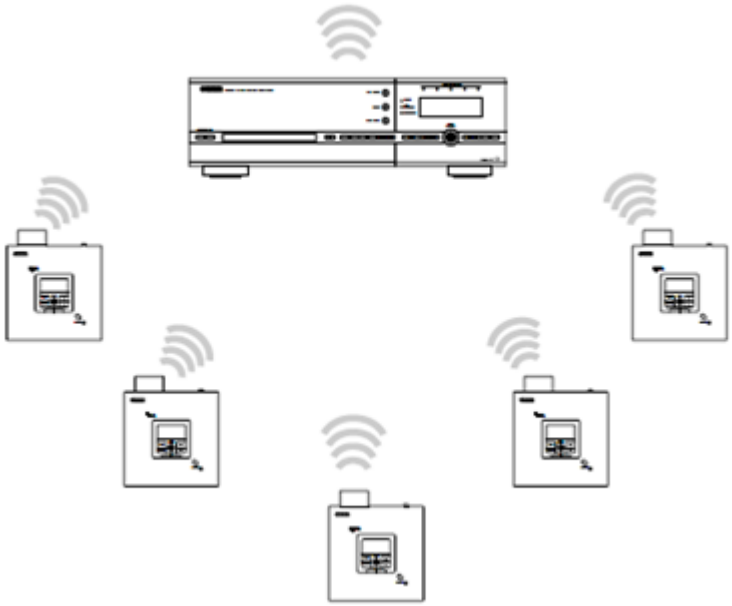   A wired network transmits data through a special type of cable, called a LAN cable. You must physically connect each MusicCAST client and server to a network router or hub with one of these cables. Connections using LAN cables functions without problems over much longer distances than connections using the wireless network used in the MusicCAST system."

Exemplary Disclosures
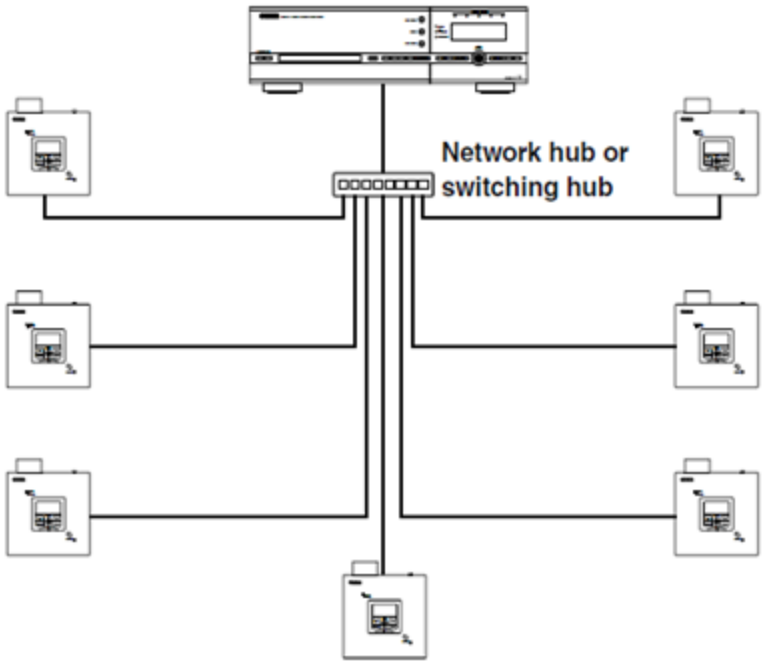 Yamaha MCX-A10, Owner's Manual at 21.   Yamaha, Digital Audio Server MCX-1000 Owner's Manual (GOOG-SONOSITC-PA-00022492)   **Configuring the MusicCAST network**   The MusicCAST server stores all data used in your MusicCAST system, and distributes it to MusicCAST clients for playback. MusicCAST clients do not store or record any music data. All components in the MusicCAST system use a Local Area Network (LAN) for transmission and reception data. The MusicCAST system can use both wired and wireless network connections to transmit music data. Both types of connections transmit the same data, but use different methods to do so. Refer to the MusicCAST system setup guide for diagrams of various possible network configurations.

Exemplary Disclosures

What is a wireless network connection, and when should I use one?

Wireless networks such as those used in the MusicCAST system use weak radio signals to transmit data. You do not need a physical connection between your MusicCAST components if you connect them using wireless network connections, but you need to place all MusicCAST clients in fairly close proximity to the MusicCAST server for them to work correctly, as the diagrams below illustrates.

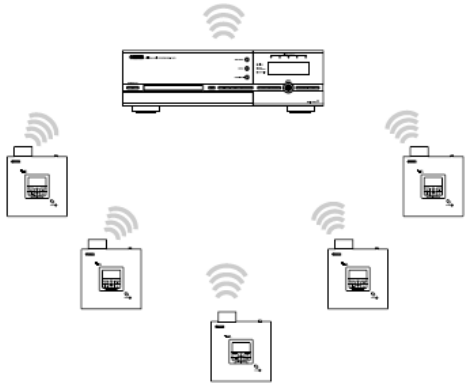

Yamaha, MCX-1000 Owner's Manual at 104.

What is a wired network connection, and when should I use one?

Wired networks use cables (called LAN cables or CAT-5 cables) connected between components to transfer data to a central network component (a network hub), which then transfers the data on to the appropriate destination. To use wired connections in the MusicCAST system you need to physically connect your MusicCAST clients and servers to a hub with LAN cables. Installing a MusicCAST system using wired network connections requires more time and effort than using wireless connections, but a wired networks can carry more data over greater distance than wireless networks. The MusicCAST server supports simultaneous playback for seven MusicCAST clients over a wired network.

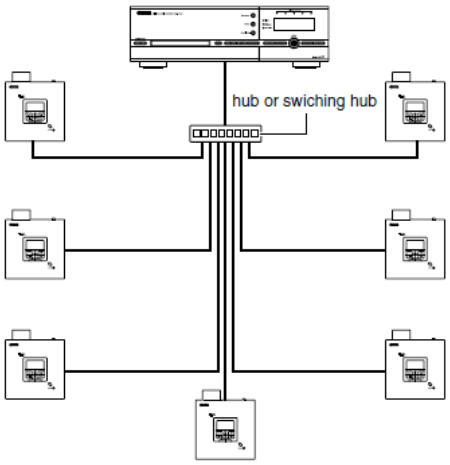

Yamaha, MCX-1000 Owner's Manual at 105.

Exemplary Disclosures
US7295548 ("Blank") (GOOG-SONOSITC-PA-00012690) "The present invention is directed to a method and system for disaggregating and connecting A/V components, and communicating A/V content stream information. An A/V stream from a source device is packaged for transmission over an IP network to one or more output devices. A brick device enables the integration of legacy A/V systems into the network supported A/V system. The brick device operates to provide analog signal and IP protocol conversion, along with the synchronization of received A/V stream data packets. The rendering and play of the A/V stream content on multiple output devices is synchronized to overcome distortions and other network idiosyncrasy and to facilitate a pleasant user experience." Blank at Abstract. "The invention provides for an A/V stream from a source device to be packaged for transmission over an IP network to one or more output devices. A brick device enables the integration of legacy A/V systems into the network supported A/V system. The brick device operates to provide analog signal and IP protocol conversion, along with the synchronization of received A/V stream data packets. The rendering and play of the A/V stream content on multiple output devices is synchronized to overcome distortions and other network idiosyncrasy and to facilitate a pleasant user experience." Blank at 3:7-17. "A/V transmission and play synchronization is achieved by establishing a time synchronization between source and receiving devices. Time synchronization is attained by electing a time master on a network. All bricks and compliant IP A/V devices synchronize their clocks to the time master. In operation, A/V data packets that originate from a source device include a time stamp (t). The time stamp (t) is obtained from the time master device 228. Also included in the transmission data packet is a delay indication (d). In combination, these time related components of the data packet instruct the receiving device on when to render information. Essentially each receiving device will wait to render an associated packet until a particular time period (t+d). As such, all receiving devices will play the received information packet at the same moment in time—t+d regardless of when the information was actually received at the device from a source. For example, suppose there are two receiving devices, recvA and recvB. Further suppose a data packet takes x seconds to reach device recvA and y seconds to reach device recvB. To the extent that x and y seconds are less than the specified packet delay indication d, both recvA and recvB will play/render the packet at time t+d, in synchronization, regardless of when the packets were received." Blank at 6:42-65. "The concept of tight-time provides a synchronization of the human perception of audio and video information in an IP network. Audio to video synchronization is commonly referred to as lip-synch. It is well known that the speed of sound is approximately one foot per millisecond and that the speed of light is approximately one foot per nanosecond. As such, visual information perceived by a human will reach the brain much quicker than any accompanying sound that is simultaneously generated. Through various experiments and studies within the art, it has been determined and generally accepted that a range of negative eight milliseconds (8 mSec) to positive twenty or thirty milliseconds (+20/30 mSec) is about the detection threshold for sound to visual delay. In other words, the delay between a visually perceived event and the

Exemplary Disclosures
accompanying sound must fall within the stated range in order to go unnoticed. More specifically, when dealing with A/V streams, if sound arrives eight milliseconds prior to the video or twenty milliseconds after the video it will not be noticeably disjointed to the human listener." Blank at 6:66-7:18. "When audio information is directed to two or more speakers, a tighter phasing of the signals is required in order to ensure that there is no noticeable distortion to listeners. The simplest distortion is an echo but more subtle distortions occur due to signal cancellations. Tight timing for maintaining a quality stereo image (or for a larger number of channels) has not been clearly delineated in the academic literature but time accuracies in the tens of microseconds are clearly discernable. Some movie studios use a rule of thumb that the accuracy must be ¼ wavelength of the highest frequency of interest. Therefore, a 20 KHz signal, would require 12.5 microseconds timing accuracy. The present invention incorporates techniques to address and minimize the potential of such distortion, when signals are sent across a network to receiving devices. The technique is based on the concept of synchronized signal play by all receiving devices." Blank at 7:19-35. "As stated above, the general rule of thumb is that synchronization to twelve microseconds (12 usec) should provide a studio quality listener experience. The synchronization is much less if only audio to video synchronization is required. All source and receiving devices of the present invention synchronize their clocks to provide a single reference point. Synchronization is achieved by referencing a single master time device 228. It should be noted however, that the synchronization accuracy of these device clocks is dependent on how each device is connected to the master time device for example, a wired versus a wireless connection. The propagation delay variance of the medium by which the receiving device is connected to the network, affects the accuracy of the synchronization time received from the master time device 228. However, to the extent that all receiving devices are in synch, it does not matter how far out of synch the collective receiving devices are with the source device. In other words a tight time synchronization between the receiving devices enables synchronized play and rendering and thus enhanced listening pleasure for a user. Thus a feature of the present invention is the provision of tight time synchronization." Blank at 7:36-57. "Having introduced the 'tight-time' concept of the present invention, the implementation of tight time for the synchronization of A/V streams will be discussed with reference to FIGS. 4 and 5. In FIG. 4, a traditional Phase Lock Loop (PLL) for handling Sony Philips Digital Interchange Format (SPDIF) information is illustrated. As shown, a source DVD 402 provides signals in SPDIF, which are sampled by a PLL 406 and received by a DAC 404 before being played through speaker cone 408. This arrangement is typically utilized to address the inconsistencies between the internal clocks of source devices such as the DVD 402 and a typical intermediate device such as DAC 404. For instance, although DVD 402 may be operating at a frequency of 44.1 kHz, and DAC 404 may also be operating at 44.1 kHz, the fact remains that due to the nature of electronic components, the two frequencies will not be exactly identical. The two frequencies may be off by fractions of a decimal. In other words, DVD 402 may actually be at 44.0877 kHz and DAC 404 at 44.0994 KHz. As such, over a prolonged period of time and every

Exemplary Disclosures
once in a while, there will exist a condition of buffer underflow or overflow in the DAC 404. In other words depending on which of the two components is faster, the DAC 404 may end up with an empty buffer, with nothing to pass on to the speaker. Alternatively, the DVD 402 may have no room in the DAC's buffer to place new information. PLL 406 enables a correction of this discrepancy. The correction results in identical phases between the devices and thus synchronization. PLL 406 listens to the incoming signal from the DVD 402 and adjusts DAC 404 accordingly, by speeding up or slowing down the flow of information out of the DAC 404 buffer." Blank at 7:58-8:21.
7[e] while performing the master device role, evaluating one or more operational performance metrics of the one or more processors or the at least one network interface indicating potential degradation in performance of synchronous playback of information content by both the first and second zone player, and based on the evaluation, determining that the second zone player should perform the master device role for the synchrony group;
The disclosures listed under claim element 7[e] in Exhibits 715-01 through 715-09 demonstrate that the limitation was known and a POSITA would have been motivated to incorporate it into an existing audio system. Defendant incorporates by reference each of those disclosures here. The references discussed below further demonstrate that this limitation was an obvious modification and provide rationales for making the modification. <u>US20010012757 ("Boyle")</u> "This problem is solved in a system made in accordance with the present invention by ranking each station 100 in terms of its antenna performance. A station 100 having the best antenna ranking then preferentially becomes the master. The antenna ranking can be determined under static conditions, or it may be adjusted dynamically depending on the local environment of a station 100, for example based on measured VSWR or some other signal quality measure. A station 100 capable of antenna diversity would be given a high ranking because of the advantages this confers. The stations 100 may determine their antenna rankings relative to one another, enabling an optimum master station to be chosen." Boyle at [0023]. "The selection of master station requires the stations 100 to compare their rankings. One way in which this can be accomplished is for the master station to request each of the other stations 100 to provide their rankings, using standard Bluetooth communication protocols. If the master station determines that its ranking is lower than one of its slave stations then it hands over the master role to that station, using the normal methods defined in the Bluetooth specification." Boyle at [0024]. Boyle at Fig. 3:

Exemplary Disclosures
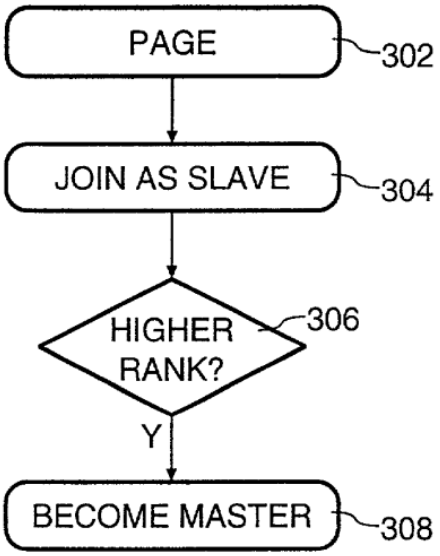 FIG. 3 US7421478B1 ("Muchow") "Each node occasionally sends out a "Heartbeat" message, which indicates the status of each master and/or slave that the node is operating or maintaining. In one embodiment, each Heartbeat message can include the status information for multiple masters and/or slaves. In addition, each node determines whether each application instance's configuration information is current, and requests new configuration information for an application instance when it is not current. When a node determines that it should no longer operate as a master for an application instance, the node can initiate a resignation process, during which another node will attempt to become the master for the application instance. In one embodiment, the node resigns to the last slave from which the node received a heartbeat." Muchow at 3:47-60. "The node also may transition out of the Master State 218 if the application instance, application, or node is or soon will be operating improperly. In one embodiment, a monitor task, described later, periodically checks to see how the various application instances in the master state are running. The application instance health is indicated by criteria that the application instance provided upon registering itself. If the application instance is not running properly according to the criteria, or some other resignation event occurs, the monitor task sends a message to the main master-slave task. The main task then causes the node to send out a Resignation message, and a state transition to the Resignation State 220 occurs, as will be described in more detail below." Muchow at 11:33-45. Muchow at Fig. 5:

Exemplary Disclosures
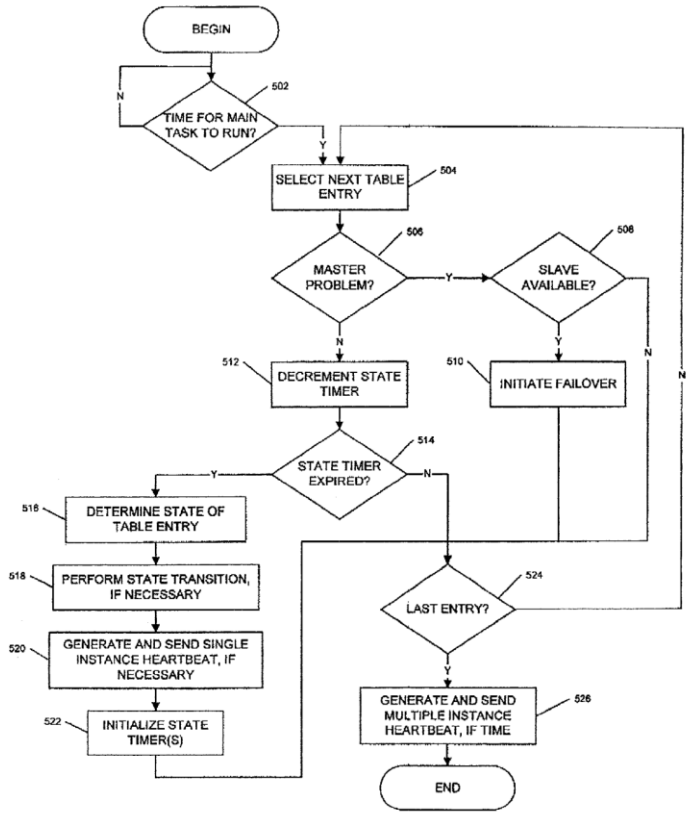 FIG. 5 <u>US20040114607 ("Shay")</u> "In accordance with the invention, one terminal or node is designated to be the master clock source and implements a master clock 150 to which all the other nodes 20 are locked. (If the master clock is unplugged or fails, another node automatically takes its place in a seamless fashion.) A clock packet that contains a time value 152 is periodically sent by the source node but unlike the prior art patents referenced above this packet is not used to create time slots or to order the outputs of the transmitting terminals. Such control is not needed , because the invention uses switched Ethernet rather than a shared medium and has no need for timed access. The clock packet is not transmitted at the beginning of a sequence of audio packets. Rather, it is transmitted at a much lower rate and a PLL (Phase Locked Loop) circuit at each of the nodes increases the rate to provide a synchronized audio sample clock in receiving terminals or nodes." *Id.* at [0073]. "Referring to FIG. 4, in order to synchronize multiple clock devices, one device is chosen to be the master and implements a master clock 150, while all other devices become slaves which must follow and synchronize to the one master by implementing a slave clock 154. Choosing which device will be the master may be a manual operation, or an automatic one determined by a predetermined protocol exchanged via the communication network 10 in the event of a failure of the master. In one exemplary process after a timeout delay of receiving no clocks, the master

Exemplary Disclosures
clock 150 is assumed not functioning any longer, and every possible new master transmits a preliminary clock message. If there are more than one new clock master candidate, the candidates vote themselves off in favor of the master detected with highest merit. In this embodiment the master with highest merit is determined from an assignment of unique values to each device, for example, such as the lowest ethernet network address value." *Id.* at [0079]. <u>EP1202490A1 ("Fujimori")</u> "It is therefore an object of the present invention to provide a communication control apparatus and method which can facilitate identification of actual connecting states between a plurality of networked nodes." Fujimori at [0006]. "The names of all the node groups currently present on the communication network may be obtained in any desired manner. Because each of the nodes stores, in its storage section, the group identification information (or node group name) of the node group which it belongs to, the group identification information (or node group names) of all the node groups may be acquired by making inquiries to the individual nodes. In an alternative, if the nodes include any particular node capable of performing a managerial function, such as a personal computer, the particular node may store current group setting states within the communication network so that the group identification information (or node group names) of all the node groups may be acquired by inquiring of the particular node about the current group setting states. Alternatively, if the node of the user can store the node group setting states in the communication network, the group identification information (or node group names) of all the node groups can be acquired without inquiring of the communication network about the node group setting states." Fujimori at [0037]. "Also, at step S25, the fact that the user' s node has become the clock master node in the node group is registered by storing, into the predetermined storage section, the information specific to the user' s node as the clock master node. At the same time, another node which has so far been the clock master node (previous or last clock master node) in the node group is given, via the communication network, a message to the effect that the role of the other node as the clock master node is to be now canceled (revoked). In response to such a message, the other node which has so far possessed the name of ""MasterClock 44.1 kHz"" leaves the node group by deleting the group identification information of the node group and the specific information as the clock master node from the other node' s storage section. In this way, the role of the clock master node in the node group is transferred to the node which has executed the clock-master-node setting process of Fig. 8. At step S25, the name (nickname) of the clock master node can be changed as necessary. However, even in such a case, the specific information (specific ID) representing the role as the clock master node never changes. Thus, each of the remaining nodes (slave nodes) belonging to the node group can carry out data transmission/reception processing without caring about or noticing the fact that there has taken place a changeover in the clock master node." Fujimori at [0051].

Exemplary Disclosures
"By thus performing control such that only one node of a particular function, i.e. only one clock master node, is allowed to exist in one node group, an operation for changing a setting change, such as one for changing the node of the particular function, i.e. the clock master node, from one node over to another can be carried out with ease. The node, having newly become the clock master node, communicates with any of the remaining nodes (slave nodes) on the communication network, using the predetermined name or specific ID indicating that the node is now the clock master node; for example, the node adds, to the header of a synchronization signal packet to be transmitted to the communication network, the specific ID indicating that the node is now the clock master node." Fujimori at [0052]. "The nodes represented by reference characters MN1 - MN3 are each a word clock master node that has a function of generating a reference time stamp in accordance with a predetermined clock frequency such as 44.1 kHz or 48 kHz. The nodes represented by reference characters N1 - N9 are slave nodes subordinate to the master nodes MN1 - MN3. Any one of the slave nodes N1 - N9 can be converted to a master node in response to selecting operation by a human operator, as long as it has a master clock generating function. Further, any one of the master nodes MN1 - MN3 can have other necessary functions than the master clock generating function, such as a tone generating function and performance data generating function." Fujimori at [0027]. <u>WO9912319A1 ("Stirling")</u> "For example, in a synchronous network one of the stations will generally be assigned as the master station for timing, with the other stations in the system assigned to synchronise as slaves to this master station. The designation of the master and slave stations for the address initialisation can be made the same as the timing master, but need not be so. For example, the timing master in a D2B Optical system may be a digital audio tuner, while the master station for the purposes of initialisation and functional control is the head unit. Further, it is also possible to provide the system with one or more stations which are capable of becoming the system master in the event of a fault, or for certain operations." Stirling at 20:12-20. <u>US20020018458A1 ("Aiello")</u> "The master transceiver 12 carries out the operation of managing network data communication via the exchange of "protocol messages" in the command slot 62 of frame 58. The master transceiver 12 carries out the operation of authenticating slave transceivers 14 a through 14 n, assigning and withdrawing data time slots 64 a through 64 n for the slave transceivers 14 a through 14 n, and controlling power of the slave transceivers 14 a through 14 n." Aiello at [0076]. "Master transceiver 12 authenticates or registers each slave transceiver by ascertaining the "state" of each of the slave transceivers of the network 10. Each transceiver operates as a finite-state machine having at least three states: offline, online, and engaged. When a transceiver is in the offline state, the transceiver is considered "unregistered" and is not available for

Exemplary Disclosures
communication with the other devices on the network 10. Each slave transceiver must first be "registered" with master transceiver 12 before the slave transceiver is assigned or allocated a data slot within the TDMA frame 58. Once a transceiver is registered with the master transceiver 12, the device is considered "online"." Aiello at [0077]. <u>US7710941 ("Rietschel") (GOOG-SONOSITC-PA-00018781)</u> "A further improvement in the coordination and particularly in the control between master and reproduction units or slaves can be achieved by using the data streams or data packets to send at least one command to the reproduction units together with an associated execution time. By way of example, it is possible to transfer commands such as Pause, Play, Stop etc. in this context. Preferably, the execution time should be chosen such that at least the longest network delay time established in the network between the master and the reproduction unit can elapse between the transfer of the command to the network and the execution time. It is thus possible to ensure that when the command arrives at the respective reproduction unit the execution time is not yet in the past." Rietschel at 6:17-29. "In the present case, the procedure is as follows: The approach used is to request the time from the server taking into account the average propagation time for the data. The unit itself takes its current time and measures the time taken for the response from the server. This response contains the current server time at the time at which the request arrives. If this operation is carried out a number of times, slight fluctuations in the data propagation times can be compensated for: a) Slave sends UDP datagram to the station to which it wishes to be synchronized, and requests the current time thereon. The telegram indicates its 'own' time (transmission time). b) The telegram is provided with the local (master) time by the receiver, the 'slave' transmission time being maintained, and is returned to the slave. c) The slave receives the telegram returned by the master and enters it into a table, with the reception time being noted. d) Steps a-c take place a plurality of times (e.g. at least 8× in the case of first synchronization, 3× in the case of resynchronization), with the aim of obtaining as accurate a result as possible through averaging by omitting extreme values. e) If the table contains sufficiently meaningful data, evaluation takes place. To this end, the difference (current slave time minus slave transmission time) is formed for each telegram and a check is performed to determine whether the telegram was in transit for a long time (large difference). Only the telegrams with the smallest difference are taken, and it can normally be assumed that if the units are the same then the transmission time is divided up approximately symmetrically over the two transmission paths. This means that a "master time" which is

Exemplary Disclosures
independent of the normal slave time can be synchronized to the master very accurately in the slave." Rietschel at 9:35-67. "In a process which is independent of receipt of the tcp stream, the master sends the data from the ring buffer in blocks, immediately after they arrive, by UDP broadcast to the network, supplemented by a protocol header, which inter alia contains the 'address' of the first byte sent, the exact master time, the address of the next byte which is to be sent to the codec by the master etc. This is shown in FIG. 2 b). The ring buffer 5 is constantly filled with data. The output pointer 6 is at a particular location and sends the data read there to the local codec/converter for reproduction. The output pointer 6 moves forward (cf. direction of arrow) in line with the internal clock of the master. The data input pointer 8 indicates that position at which the data received from a server are currently being read into the ring buffer 5. Essentially directly 'behind it' in the reading direction is the data forwarding pointer 10, which indicates the position at which the data which the ring buffer 5 contains are forwarded from the master to the slaves via a multicast/broadcast. In this case, the reference symbol 12 indicates a typical data packet. The ring memory 5 accordingly contains a 'stock of data' 9, the fundamental part of which is available for any 'retry protocols' which may be required (cf. below). Typically, this stock of data comprises between approximately 1 and 4 seconds of data. The safety area directly before the output pointer 6 is no longer available for correction protocols, since the output pointer can no longer be transferred in appropriate fashion." Rietschel at 10:56-11:13. "The slave receives these datagrams and itself enters the received data into a ring buffer 5. The protocol header is evaluated directly, specifically by virtue of the master time being checked for accuracy and the information 'master time/current byte' (which is the current moment of playback) being temporarily buffered or used to move the output pointer 6 to a correct location or to adjust the latter's operating characteristics. The ring buffer 5 of the slave is shown in FIG. 2 a). The data input pointer 7 is at the position of the master's data forwarding pointer 10 (naturally taking into account the propagation time over the network), and ideally the data output pointer 6 is at the same location as the master." Rietschel at 11:14-25. "Particularly within the context of the output of audio files, it is found to be advantageous to design the synchronization of the individual reproduction units to be in the range below 100 ms. Preferably, the propagation-time differences should be less than 10 ms or less than 2 ms, particularly preferably less than 1 ms. From psychoacoustics, it is known that normal hearing is capable of perceiving relatively large propagation-time differences of greater than 30 ms as echo, which is precisely what needs to be prevented within the context of this invention. It is found that in the aforementioned "multichannel" mode, too, an accuracy in the range of 1 ms is sufficient. The synchronization of data streams to this accuracy can no longer be assured in a typical network without active synchronization of the individual reproduction units, and in particular it is not possible simply to switch in further stations without active synchronization. Typically, the network is a conventional, wired network, but it may preferably also be a wireless network, particularly a radio network (e.g. Wifi, wireless fidelity, also called IEEE802.11b, or follow-up standards at a higher data rate, such as IEEE802.11a)." Rietschel at 4:10-28.

Exemplary Disclosures
"A further improvement in the coordination and particularly in the control between master and reproduction units or slaves can be achieved by using the data streams or data packets to send at least one command to the reproduction units together with an associated execution time. By way of example, it is possible to transfer commands such as Pause, Play, Stop etc. in this context. Preferably, the execution time should be chosen such that at least the longest network delay time established in the network between the master and the reproduction unit can elapse between the transfer of the command to the network and the execution time. It is thus possible to ensure that when the command arrives at the respective reproduction unit the execution time is not yet in the past." Rietschel at 6:17-29. "The proposed method also allows tree structures to be operated. Such cascaded synchronization can be achieved by virtue of at least one of the reproduction units being used, for its part, as master for a subnetwork (e.g. LAN). Preferably, corresponding repetitions are then forwarded to the topmost master (root master). It is thus possible to synchronize as many reproduction units as desired, and each of the reproduction units can for its part be used as a repeater (reproduction unit which is active both as a slave and as a master). In principle, it is thus also possible to have a slave which is acting as a master in this fashion sent to another network. For the root master, the result is then altered maximum network delay times, of course, which then need to be taken into account accordingly. This allows the data stream to be replicated very efficiently and possibly extensively." Rietschel at 7:13-25. "As an exemplary embodiment of the present invention, a system will be described in which a "transmission unit" distributes a continuous data stream delivered by a (digital or analog) audio data source wirelessly over a plurality of distributed reproduction units (typically active loudspeakers), with the latter decoding and outputting various channels of the same data stream. To this end, the transmitter unit has a CPU, i.e. a processor, buffer store, and at least one bidirectional communication interface, in the example described an 802.11b radio network interface, and an audio input for analog or digital audio data and also its own audio output (that is to say that it is also a reproduction unit). The other reproduction units use the same architecture, but instead of an audio input have a digital and/or analog audio output and possibly power amplifiers and sound transducers/loudspeakers 13." Rietschel at 7:66-8:13. "Each reproduction unit contains a 'discovery server' which, upon the arrival of a particular network block (UDP datagram for a specific port number; UDP is a standard, low-overhead, connectionless, host-to-host protocol which allows data packets to be interchanged over switched computer networks. It allows a program on a computer to send a datagram to a program on another computer), reacts with a response block. Alternatively, it is possible to use other discovery protocols, for example SSDP (Simple Service Discovery Protocol, a subprotocol of UPNP; Universal Plug and Play is a standard which is used to permit direct and automatic linking of peripheral devices in a local network without configuration)." Rietschel at 8:45-56. "When such a system of reproduction units is started up, it is important to define a master in good time so that the individual reproduction units do not all reciprocally attempt to align themselves relative to one another. In line with one preferred embodiment of the invention, this

Exemplary Disclosures
is advantageously done such that the first reproduction unit which has the task of reproduction is automatically defined as master. The procedure in this case is typically such that a unit, having been requested to effect reproduction, initially understands itself simply to be a potential master but does not start any actions which are typical of a master. At the instant at which it receives a request from another reproduction unit to make the data stream being played back available, the unit becomes the master. The requesting unit automatically becomes the slave. It goes without saying that it is also possible to define a unit as a master, but this solution has the drawback that if this master is ever not intended to be operated for whatever reasons or fails then the system is in an undefined state. Correspondingly, it should also be stated in the protocol that if the present master fails or is turned off, the first unit implementing this automatically defines itself as the new master in the network and immediately undertakes the task as the master." Rietschel at 3:24-44. <u>US7392102 ("Sullivan") (GOOG-SONOSITC-PA-00020044)</u> "The present invention provides a method and apparatus for synchronizing the audio playback of several devices by using an audio waveform sample. One device can determine whether a specific section of the digital audio stream is being played either behind or ahead of the same section being played on another device, the reference device. It requires that the reference device transfer to the second device a brief portion of a digital waveform it is playing (a series of digital audio samples), along with the exact time at which this waveform is expected to play. The second device locates the same waveform sample in its stream, and can then use it as a reference to adjust its own playback of the audio stream to be in sync with the reference. The waveform is only a small part of the audio stream—it might be a small set of sequential audio samples, or a set of every nth audio sample, to be determined by empirical test." Sullivan at 3:30-45. "PCA transmits to PCB 1) the waveform segment, 2) the exact (delayed) time it is to be played, and 3) PCB's actual latency value. PCB examines its own audio stream, beginning at the current location playing minus the latency value, in other words, it is looking for the spot in the audio that was playing when PCA captured and transmitted the audio segment. PCB searches forward and backward from that spot until it locates the audio segment. PCB synchronizes its audio playback with PCA by delaying the playback until the audio segment is exactly aligned with the exact playback time received from PCA." Sullivan at 7:11-21. "FIG. 1 illustrates a system of several devices. Transmitting device PCA sends the audio stream, sync information, and time and other data to receiving devices PCn, such as PCB and PCC. Transmitting device PCA controls audio playback for the system. The audio signal is actually transmitted by audio source 5 to PCA and other devices PCn, such as PCB. The devices may be interconnected by a bus cabling or may communicate with one another through wireless communication such as radio frequency or infrared." Sullivan at 4:5-13. <u>US20020124097 ("Isely") (GOOG-SONOSITC-PA-00016308)</u>

Exemplary Disclosures
Isely teaches that, upon being powered, each networked audio device engages in a salutation protocol, in which it announces its presence (i.e., "indication of a status of the synchrony group") to the controller over the local network. "In further embodiments of the present invention, the site is a residence and various of the groups of audio equipment are associated with respective rooms of the residence. The address based protocol may be a User Datagram Protocol (UDP) and may further be a Real-time Transport Protocol (RTP) and the network interface may be an RTP interface. The RTP interface may output the digital audio streams using time-stamped packets using UDP. The plurality of network attached audio devices may be configured to provide a salutation protocol to announce their presence to the controller over the local network. Furthermore, the controller may be configured to assign the associated address to be received by respective ones of the plurality of network attached audio devices to the network attached audio devices over the local network using the salutation protocol so as to group ones of the plurality of network attached audio devices." Isely at [0018]. The controller uses this information to collect a list of all audio devices and provides an interface for aggregating virtual zones. The salutation protocol is also used to distribute the interface for aggregating audio devices, thus allowing remote configuration of audio device groups. "When the audio devices 105 are powered they may use a salutation protocol (such as Universal Plug and Play (UPnP), Jini from Sun Microsystems or Salutation) to announce their presence on the network 120. The controller 125 with audio configuration capability collects a list of all the audio devices 105 and provides, in cooperation with the network interface 100, an interface for aggregating and segregating virtual zones and may use the same salutation protocol to distribute the interface. The audio devices 105 may then be remotely configured using the same salutation protocol to add them to network groups." Isely at [0041]. <u>US5808662 ("Kinney") (GOOG-SONOSITC-PA-00016393)</u> Kinney teaches a GUI-based controller that allows participants to control the playback of a movie over the network. See claim 17[E], supra. Kinney further teaches that a playback device transmits status information, such as the current position in the playback, current play rate, and whether the movie is currently playing, to the controller. "Each workstation may be equipped with a Cosmo Compress™ option board. Cosmo Compress allows the media playback engine 110 to compress and decompress the movies in a fast, efficient manner. If Cosmo Compress is not installed, compression and decompression is performed in software. The Indy workstation is connected to monitor 140. A graphical user interface (GUI) 125 can be displayed within monitor 140. GUI 125 provides icons and buttons that allow participants to control the viewing of a movie." Kinney at 3:65-4:6. "FIG. 4 illustrates a larger view of the graphical user interface used in a preferred embodiment of the present invention to control playback of the movie displayed within window 320. Control

Exemplary Disclosures
panel 330 includes a plurality of playback buttons. A frame control button 440 is used to quickly advance to a particular frame within the movie. Frame control button 440 takes the form of a sliding button. A participant activates frame control button 440, as well as the other buttons, with the use of a keyboard, mouse or similar pointing device. This type of point and click technology is well known in the art. An alternate embodiment contemplates using an external jog-shuttle (shown in FIG. 1 as reference number 170) to control the speed and direction of the playback. Speed and direction could also be controlled graphically using sliding buttons or the like. Note that these embodiments are only illustrative, and other embodiments for controlling speed and direction are contemplated by the present invention." Kinney at 5:4-20

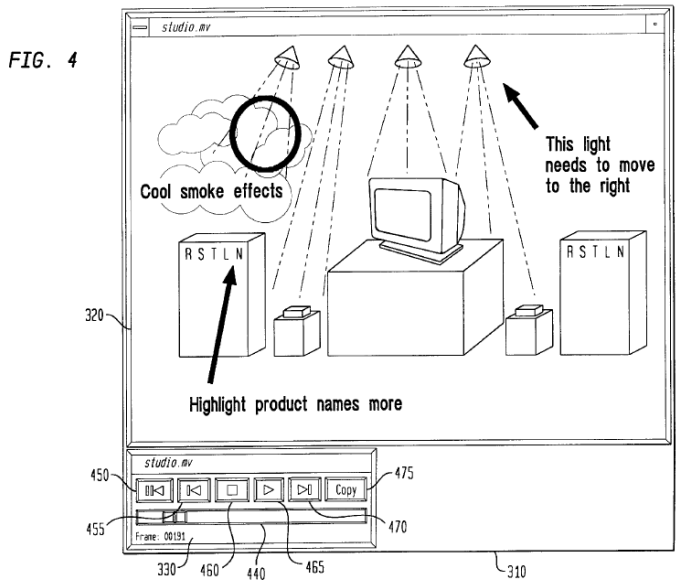

"If block 266 determines that the event was not a hello event, an error is indicated, as shown in block 238. However, if the event was a hello event, flow continues to block 268. Block 268 determines whether the current process should respond to the hello event. In a preferred embodiment, the first participant is considered the "master" and therefore only the first participant responds to hello events. Otherwise, flow continues to block 270. Block 270 forwards a seek event to the participant that is joining the viewing session in order to synchronize the new participant with the other participants. Next, block 272 determines whether the movie is currently playing. If the movie is not playing, flow continues back to block 214. Otherwise, a play event is forwarded, along with the current play rate, to the new participant. Flow then continues back to block 214." Kinney at 8:8-22.

Kinney Fig. 2C:

Exemplary Disclosures
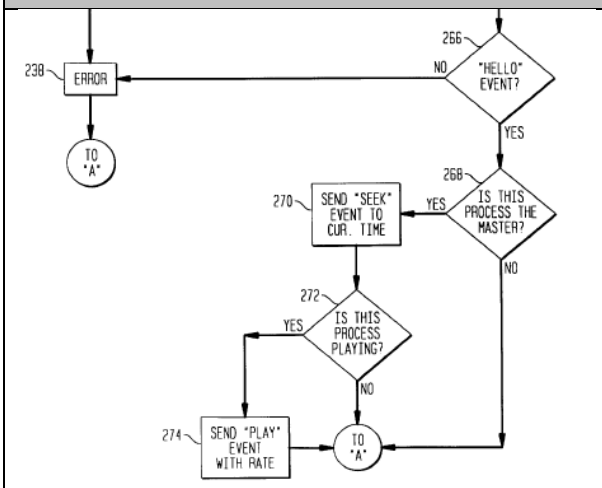 Yamaha, Digital Audio Server MCX-1000 Owner's Manual (GOOG-SONOSITC-PA-00022492) **Wireless LAN screen** This screen shows the following information about the status of the wireless network connections in the MusicCAST system network: • **Communication Quality** The quality of the signal the MusicCAST client is receiving. • **Signal Level** The strength of the signal the MusicCAST client is receiving. • **Bit Rate** The speed off the signal the MusicCAST client is receiving, measured in megabits per second.

Exemplary Disclosures
Carry out the following procedure to access this screen: **1 Carry out the procedure above to access the Network screen.** **2 Use ∧/∨ to move the cursor to "Wireless LAN" and press SELECT.** The Wireless LAN screen appears on the on-screen display. 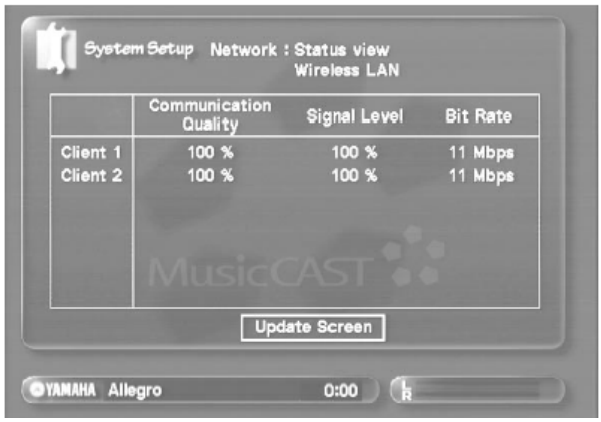   Yamaha, MCX-1000 Owner's Manual at 112.
7[f] in response to determining that the second zone player should perform the master device role for the synchrony group, initiating migration of the master device role from the first zone player to the second zone player; and
The disclosures listed under claim element 7[f] in Exhibits 715-01 through 715-09 demonstrate that the limitation was known and a POSITA would have been motivated to incorporate it into an existing audio system. Defendant incorporates by reference each of those disclosures here. The references discussed below further demonstrate that this limitation was an obvious modification and provide rationales for making the modification. *See* claim 7[e], *supra*. *See also*: <u>US20010012757 ("Boyle")</u> "This problem is solved in a system made in accordance with the present invention by ranking each station 100 in terms of its antenna performance. A station 100 having the best antenna ranking then preferentially becomes the master. The antenna ranking can be determined under

Exemplary Disclosures
static conditions, or it may be adjusted dynamically depending on the local environment of a station 100, for example based on measured VSWR or some other signal quality measure. A station 100 capable of antenna diversity would be given a high ranking because of the advantages this confers. The stations 100 may determine their antenna rankings relative to one another, enabling an optimum master station to be chosen." Boyle at [0023]. "The selection of master station requires the stations 100 to compare their rankings. One way in which this can be accomplished is for the master station to request each of the other stations 100 to provide their rankings, using standard Bluetooth communication protocols. If the master station determines that its ranking is lower than one of its slave stations then it hands over the master role to that station, using the normal methods defined in the Bluetooth specification." Boyle at [0024]. Boyle at Fig. 3:   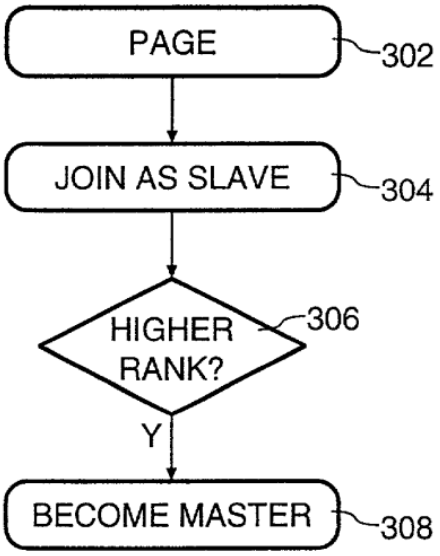   FIG. 3 <u>US7421478B1 ("Muchow")</u> "Each node occasionally sends out a "Heartbeat" message, which indicates the status of each master and/or slave that the node is operating or maintaining. In one embodiment, each Heartbeat message can include the status information for multiple masters and/or slaves. In addition, each node determines whether each application instance's configuration information is current, and requests new configuration information for an application instance when it is not current. When a node determines that it should no longer operate as a master for an application instance, the node can initiate a resignation process, during which another node will attempt to

Exemplary Disclosures
become the master for the application instance. In one embodiment, the node resigns to the last slave from which the node received a heartbeat." Muchow at 3:47-60. "The node also may transition out of the Master State 218 if the application instance, application, or node is or soon will be operating improperly. In one embodiment, a monitor task, described later, periodically checks to see how the various application instances in the master state are running. The application instance health is indicated by criteria that the application instance provided upon registering itself. If the application instance is not running properly according to the criteria, or some other resignation event occurs, the monitor task sends a message to the main master-slave task. The main task then causes the node to send out a Resignation message, and a state transition to the Resignation State 220 occurs, as will be described in more detail below." Muchow at 11:33-45. Muchow at Fig. 5:   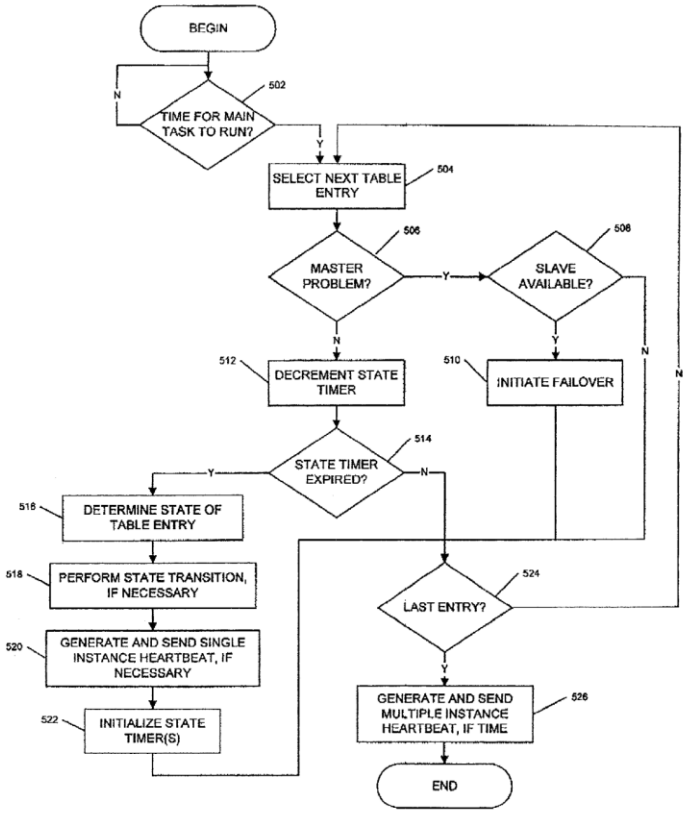   FIG. 5 <u>EP1202490A1 ("Fujimori")</u> "Also, at step S25, the fact that the user' s node has become the clock master node in the node group is registered by storing, into the predetermined storage section, the information specific

Exemplary Disclosures
to the user' s node as the clock master node. At the same time, another node which has so far been the clock master node (previous or last clock master node) in the node group is given, via the communication network, a message to the effect that the role of the other node as the clock master node is to be now canceled (revoked). In response to such a message, the other node which has so far possessed the name of ""MasterClock 44.1 kHz"" leaves the node group by deleting the group identification information of the node group and the specific information as the clock master node from the other node' s storage section. In this way, the role of the clock master node in the node group is transferred to the node which has executed the clock-master-node setting process of Fig. 8. At step S25, the name (nickname) of the clock master node can be changed as necessary. However, even in such a case, the specific information (specific ID) representing the role as the clock master node never changes. Thus, each of the remaining nodes (slave nodes) belonging to the node group can carry out data transmission/reception processing without caring about or noticing the fact that there has taken place a changeover in the clock master node." Fujimori at [0051]. "Any one of the slave nodes N1 - N9 can be converted to a master node in response to selecting operation by a human operator, as long as it has a master clock generating function." Fujimori at [0027]. <u>US6751228 ("Okamura")</u> "In FIG. 5, reference numerals 41 through 43 denote packet handlers each being the same as that shown in FIG. 1. FIG. 5 shows a master slave setting terminal SLV, a control input terminal SEQI and a control output terminal SEQO for simultaneous operations of these packet handlers. When the SLV terminal of the packet handler 41 is set to LOW, this packet handler is set to the master. When the SLV terminal of the packet handler 42 or 43 is set to HIGH, the packet handler becomes a slave. A switching block 37 of each packet handler is switched depending on whether the packet handler is master or slave." Okamura at 21:15-27. <u>US20040114607 ("Shay")</u> "Referring to FIG. 4, in order to synchronize multiple clock devices, one device is chosen to be the master and implements a master clock 150, while all other devices become slaves which must follow and synchronize to the one master by implementing a slave clock 154. Choosing which device will be the master may be a manual operation, or an automatic one determined by a predetermined protocol exchanged via the communication network 10 in the event of a failure of the master." Shay at [0079]. <u>US20020018458A1 ("Aiello")</u> "The master devices described herein, in addition to carrying out its functions as a master device, may also carry out functions as a slave device as described above. For example, the master device may also engage in data transfer of non-protocol related data with a slave device." Aiello at [0034].

Exemplary Disclosures
US7710941 ("Rietschel") (GOOG-SONOSITC-PA-00018781) "Ending the Master Mode: The master can check the need to transmit data—that is to say the master role—by virtue of there being activity from slaves, at least for time synchronization. If there is no further client activity recorded over a relatively long period of time (at least 3× requesting interval for time synchronization) then the master can change back to normal station mode and can end transmission of the broadcasts." Rietschel at 12:62-13:2. US7392102 ("Sullivan") (GOOG-SONOSITC-PA-00020044) "The transmitting device might or might not be playing audio, and could be remote from the receiving devices. If the transmitting device is local and playing audio, it would participate in the same synchronized audio playback method as described below. This method requires nothing of the audio transmitting device, neither time synchronization, nor modification of the digital audio stream. A single time reference device PCA (one of the receivers) first sets its own clock, then sets the clocks on all the other receiving devices, as described above. PCA also keeps a record of the latency value for each receiver. Each receiver periodically adjusts itself for time drift. PCA determines an arbitrary reference interval/audio delay value (i.e., 2 seconds). PCA must keep its own playback of the audio stream delayed by this value. At exactly each reference interval (i.e., every 2 seconds) in the incoming stream, PCA captures a brief signature digital "waveform" of the audio (a series of audio sample values, enough to identify a unique segment of audio)." Sullivan at 3:45-62. "The transmitting device might or might not be playing audio and does not have to be in sync with the receivers. If the transmitting device is local and playing audio, it would participate in the same synchronized audio playback method." Sullivan at 4:1-4. "The above process describes three separate roles for devices. However, a single device could take on any of the three roles described, i.e., it could be a receiver and the time reference, or the time reference and the audio transmitter, and the like. The process is a single time reference device (probably one of the receivers) first sets its own clock, then sets the clocks on all other receiving devices. Each receiver periodically adjusts itself for time drift. Keeping time synchronized on all receivers is its only responsibility. Each receiving device keeps the playback of the audio in sync with other devices by obtaining the exact time of the received pulse relative to its own (synchronized) clock, and then delaying the audio until the pulse exactly aligns with the next multiple of the pulse interval. For instance, if the pulse interval is once every 5 seconds, but the pulse appears 570 milliseconds prior to 2:15, the audio playback is delayed for 570 milliseconds. Note that the effect of this is that the playback on all devices is in sync, but always behind the transmission by approximately the pulse interval." Sullivan at 6:59-7:10. US20040203936 ("Ogino") (GOOG-SONOSITC-PA-00017334)

Exemplary Disclosures
"When terminal 2 operating in slave station operating mode needs to operate as the master station, terminal 2 informs terminal 5, which is the master station, of a transition request REQ 1, for making the transition to the master station. Terminal 5 sends a transition permission signal ANS 1, to terminal 2, and then terminal 2 makes the transition from the slave station to the master station." Ogino at Abstract. "The communication terminal of the present invention has a transition request means for informing the master station of a transition request for its transition from the slave station to the master station, when it becomes necessary to perform as the master station while it is operating in the slave station operating mode, and it also has a mode switching means for making the transition from slave station operating mode to master station operating mode, when receiving a transition permission signal from the master station." Ogino at [0007]. "FIG. 4 illustrates the transition sequence in which terminal 2 makes the transition from the slave station to the master station. In this drawing, terminal 5, in its role as the master station, sends the control message M1 to other terminals and receives the response message S1 from each of the other terminals. When terminal 2 needs to operate as the master station because of the occurrence of a certain event, terminal 2 sends a transition request REQ1 to terminal 5 which is the master station at that time. Receiving the REQ1, terminal 5 sends a permission signal ANS1 to all other terminals. All other terminals receiving the permission signal ANS1 can become aware in advance that the master station will be changed. Upon receiving the permission signal ANS1 from terminal 5, terminal 2 makes the transition to the master station." Ogino at [0036]. "Furthermore, in the embodiment of the present invention, the communication system formed by plural wireless terminals such as digital transceivers, has been described as an example. However, without being limited to this example, the present invention is applicable to other communication systems, for example, a wireless network such as wireless LAN, and a communication system using, as terminals, household electrical appliances with data communication functions such as video cassette recorders, audio systems, TV monitors, and personal computers." Ogino at [0046].
7[g] after migration of the master device role from the first zone player to the second zone player, ceasing to perform the master device role for the synchrony group, and playing back information content in synchrony with the second zone player while the second zone player is performing the master device role for the synchrony group.
The disclosures listed under claim element 7[g] in Exhibits 715-01 through 715-09 demonstrate that the limitation was known and a POSITA would have been motivated to incorporate it into an existing audio system. Defendant incorporates by reference each of those disclosures here. The references discussed below further demonstrate that this limitation was an obvious modification and provide rationales for making the modification.

Exemplary Disclosures
See claim 7[d]-7[f], *supra*. *See also*: US20010012757 ("Boyle") "This problem is solved in a system made in accordance with the present invention by ranking each station 100 in terms of its antenna performance. A station 100 having the best antenna ranking then preferentially becomes the master. The antenna ranking can be determined under static conditions, or it may be adjusted dynamically depending on the local environment of a station 100, for example based on measured VSWR or some other signal quality measure. A station 100 capable of antenna diversity would be given a high ranking because of the advantages this confers. The stations 100 may determine their antenna rankings relative to one another, enabling an optimum master station to be chosen." Boyle at [0023]. "The selection of master station requires the stations 100 to compare their rankings. One way in which this can be accomplished is for the master station to request each of the other stations 100 to provide their rankings, using standard Bluetooth communication protocols. If the master station determines that its ranking is lower than one of its slave stations then it hands over the master role to that station, using the normal methods defined in the Bluetooth specification." Boyle at [0024]. "According to a second aspect of the present invention there is provided a station for use in an ad-hoc radio communication system comprising a plurality of stations formed into at least one network, wherein transceiver means coupled to antenna means are provided for communication with other stations, control means are provided to enable the station to perform the role of master or slave as required in a network, ranking means are provided for determining a rank representative of the station's suitability for acting as master in the network, inquiry means are provided for determining the rank of other stations in the network, and master transfer means are provided capable of performing at least one of the actions of taking over the role of master, if the station is a slave and has the highest rank in the network, and transferring the role of master to a second station, if the station is the master and does not have the highest rank in the network." Boyle at [0006]. "In an ad-hoc radio communication system comprising a plurality of stations (100) formed into at least one network (102 a, 102 b), each station (100) is assigned a rank representative of its suitability for performing the role of master station in a network (102 a). The rank may for example be assessed depending on the performance of the station's antenna (204) or its access to mains power. It is arranged that the station (100) having the highest rank in a network (102 a, 102 b) performs the role of master for that network, thereby improving the efficiency of communication in the network." Boyle at Abstract. Boyle at Fig. 3:

Exemplary Disclosures

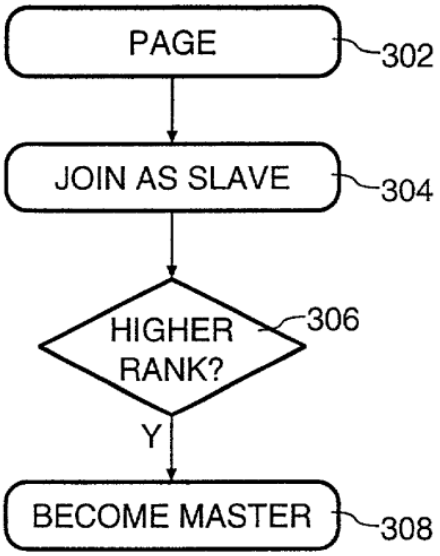

FIG. 3

US7421478B1 ("Muchow")

"Each node occasionally sends out a "Heartbeat" message, which indicates the status of each master and/or slave that the node is operating or maintaining. In one embodiment, each Heartbeat message can include the status information for multiple masters and/or slaves. In addition, each node determines whether each application instance's configuration information is current, and requests new configuration information for an application instance when it is not current. When a node determines that it should no longer operate as a master for an application instance, the node can initiate a resignation process, during which another node will attempt to become the master for the application instance. In one embodiment, the node resigns to the last slave from which the node received a heartbeat." Muchow at 3:47-60.

"The node also may transition out of the Master State 218 if the application instance, application, or node is or soon will be operating improperly. In one embodiment, a monitor task, described later, periodically checks to see how the various application instances in the master state are running. The application instance health is indicated by criteria that the application instance provided upon registering itself. If the application instance is not running properly according to the criteria, or some other resignation event occurs, the monitor task sends a message to the main master-slave task. The main task then causes the node to send out a Resignation message, and a state transition to the Resignation State 220 occurs, as will be described in more detail below." Muchow at 11:33-45.

"The Resignation State 220 is entered from the Master State 218 when a resignation event occurs, and the node will no longer function as the master for an application instance. In one

Exemplary Disclosures
embodiment, resignation events are detected by the monitor task and reported to the main task." Muchow at 11:60-64. Muchow at Fig. 5:   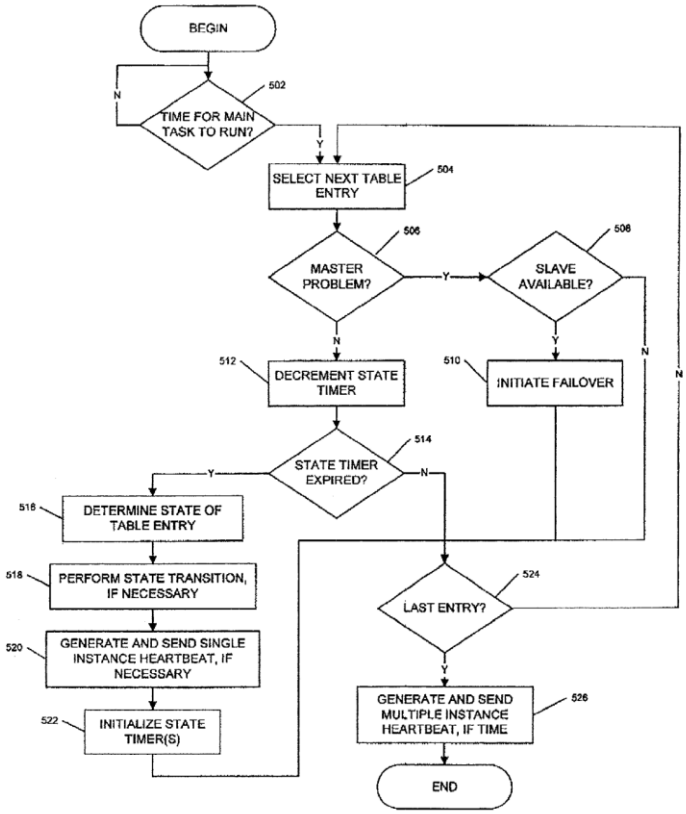   FIG. 5 <u>US20040114607 ("Shay")</u> "Referring to FIG. 4, in order to synchronize multiple clock devices, one device is chosen to be the master and implements a master clock 150, while all other devices become slaves which must follow and synchronize to the one master by implementing a slave clock 154. Choosing which device will be the master may be a manual operation, or an automatic one determined by a predetermined protocol exchanged via the communication network 10 in the event of a failure of the master. In one exemplary process after a timeout delay of receiving no clocks, the master clock 150 is assumed not functioning any longer, and every possible new master transmits a preliminary clock message. If there are more than one new clock master candidate, the candidates vote themselves off in favor of the master detected with highest merit. In this embodiment the master with highest merit is determined from an assignment of unique values to each device, for example, such a the lowest ethernet network address value." *Id.* at [0079].

Exemplary Disclosures
"Audio Packets" *Id.* at [0122]. "If the packet destination address matches one of the audio channel addresses on the list, then that packet is routed and stored into a corresponding audio channel buffer 220. That is, if the audio packet address matches the first audio channel address on the list, then the audio data is put into the first audio channel buffer, matching the second address on the list goes into the second audio channel buffer, and so forth The audio channel buffers 220 are maintained in FIFO order, and read out at a periodic rate determined by the local sample clock, serialized, and sent to the Digital to Analog (D/A) converter 222 to be converted into an analog audio signal output 144 (or sent to an AES/EBU transmitter to become a standard digital audio signal)."   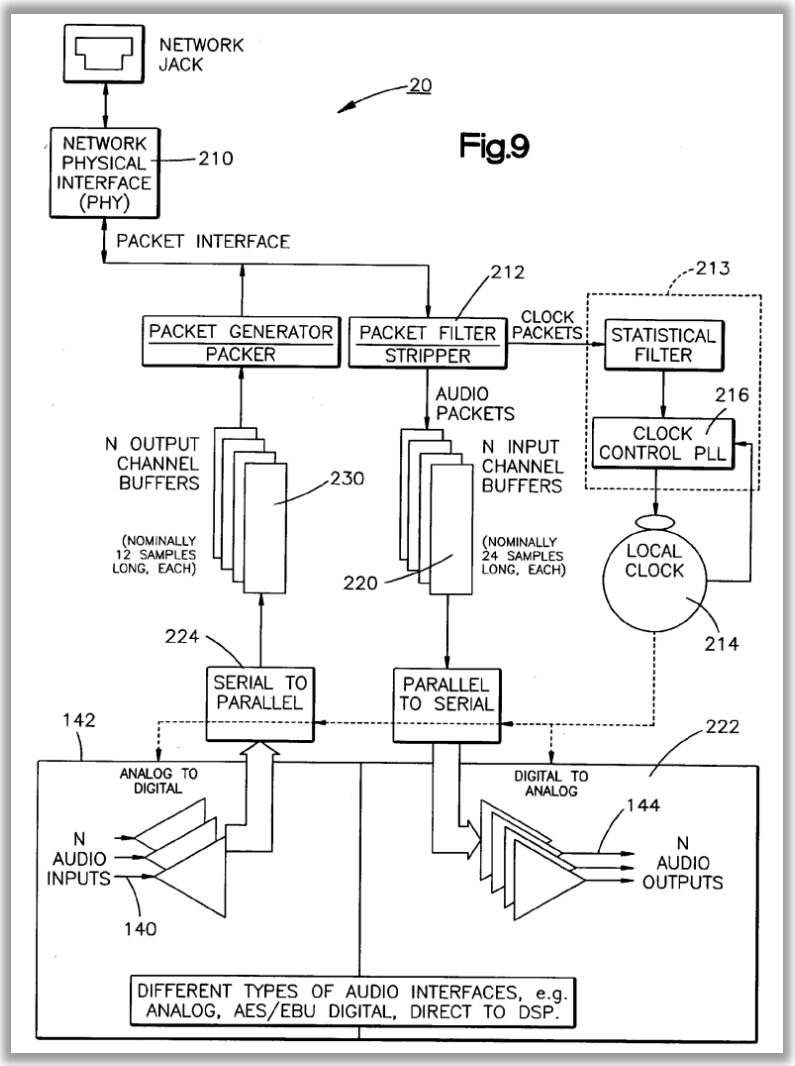   *Id.* at Fig. 9.

Exemplary Disclosures
9. The first zone player of claim 7, wherein the one or more operational performance metrics comprise a network latency metric, and wherein while performing the master device role, evaluating one or more operational performance metrics of the one or more processors or the at least one network interface indicating potential degradation in performance of synchronous playback of information content by both the first and second zone player comprises the first zone player determining that migrating the master device role from the first zone player to the second zone player would improve latency of message transmission within the synchrony group.
The disclosures listed under claim element 9 in Exhibits 715-01 through 715-09 demonstrate that the limitation was known and a POSITA would have been motivated to incorporate it into an existing audio system. Defendant incorporates by reference each of those disclosures here. The references discussed below further demonstrate that this limitation was an obvious modification and provide rationales for making the modification. *See* claim 7[e]-7[f], *supra*. *See also*: <u>US20040114607 ("Shay")</u> "In accordance with the invention, one terminal or node is designated to be the master clock source and implements a master clock 150 to which all the other nodes 20 are locked. (If the master clock is unplugged or fails, another node automatically takes its place in a seamless fashion.) A clock packet that contains a time value 152 is periodically sent by the source node but unlike the prior art patents referenced above this packet is not used to create time slots or to order the outputs of the transmitting terminals. Such control is not needed , because the invention uses switched Ethernet rather than a shared medium and has no need for timed access. The clock packet is not transmitted at the beginning of a sequence of audio packets. Rather, it is transmitted at a much lower rate and a PLL (Phase Locked Loop) circuit at each of the nodes increases the rate to provide a synchronized audio sample clock in receiving terminals or nodes." *Id.* at [0073]. "Referring to FIG. 4, in order to synchronize multiple clock devices, one device is chosen to be the master and implements a master clock 150, while all other devices become slaves which must follow and synchronize to the one master by implementing a slave clock 154. Choosing which device will be the master may be a manual operation, or an automatic one determined by a predetermined protocol exchanged via the communication network 10 in the event of a failure of the master. In one exemplary process after a timeout delay of receiving no clocks, the master clock 150 is assumed not functioning any longer, and every possible new master transmits a preliminary clock message. If there are more than one new clock master candidate, the candidates vote themselves off in favor of the master detected with highest merit. In this

Exemplary Disclosures
embodiment the master with highest merit is determined from an assignment of unique values to each device, for example, such a the lowest ethernet network address value." *Id.* at [0079]. "In accordance with an exemplary embodiment of the invention low latency audio delivery is achieved by use of only just enough buffering chosen with a view to the particular characteristics of the packet switched network 10. This solution can be regarded as the minimum possible buffering for a given set of packet switched network characteristics." *Id.* at [0053]. "Any devices communicating digitized audio information must operate off of an identical time base, or the digital audio information exchanged will not be able to be output, mixed, or otherwise combined with other audio channels. (A straightforward solution of using sample rate conversion for each audio data stream has the undesirable penalty of creating audio delay due to the buffering required by the mathematical conversion filtering process.) Therefore, a desirable solution is to have a clock circuit in each device or receiver station which are all synchronized together to a common time reference. However, in order to synchronize clock devices, information must be communicated between them, allowing them to be adjusted to be synchronized. This synchronization information is itself sensitive to timing errors, that is to say time delays in the communication of synchronization information will prevent proper time synchronization." *Id.* at [0076]. <u>EP1202490A1 ("Fujimori")</u> "The nodes represented by reference characters MN1 - MN3 are each a word clock master node that has a function of generating a reference time stamp in accordance with a predetermined clock frequency such as 44.1 kHz or 48 kHz. The nodes represented by reference characters N1 - N9 are slave nodes subordinate to the master nodes MN1 - MN3. Any one of the slave nodes N1 - N9 can be converted to a master node in response to selecting operation by a human operator, as long as it has a master clock generating function. Further, any one of the master nodes MN1 - MN3 can have other necessary functions than the master clock generating function, such as a tone generating function and performance data generating function." Fujimori at [0027]. <u>US7710941 ("Rietschel") (GOOG-SONOSITC-PA-00018781)</u> "This maximum network delay time can be ascertained from time to time by the master, for example, and can then be stored. Typically, for the sake of security, this maximum network delay time can have an additional contribution added to it, for example in the region from 1-20 ms. This additional contribution serves to cover the network transmission tolerance (safety margin) and the processing time in the transmitter and receiver. This maximum network delay time should be adapted dynamically, since this maximum network delay time can change greatly on account of alterations in the network. This characteristic time thus changes, for example when the load on the network rises (typically an increase in the maximum network delay time), or

Exemplary Disclosures
when further reproduction units or other units are switched in or disconnected." Rietschel at 6:30-42.
11. The first zone player of claim 7, wherein the first zone player performing the master device role for the synchrony group further comprises the first zone player transmitting to at least the second zone player: (i) a network address that the first zone player uses to transmit audio information, (ii) audio information, and (iii) playback timing information for audio information.
The disclosures listed under claim element 11 in Exhibits 715-01 through 715-09 demonstrate that the limitation was known and a POSITA would have been motivated to incorporate it into an existing audio system. Defendant incorporates by reference each of those disclosures here. The references discussed below further demonstrate that this limitation was an obvious modification and provide rationales for making the modification. US20040114607 ("Shay")

Exemplary Disclosures

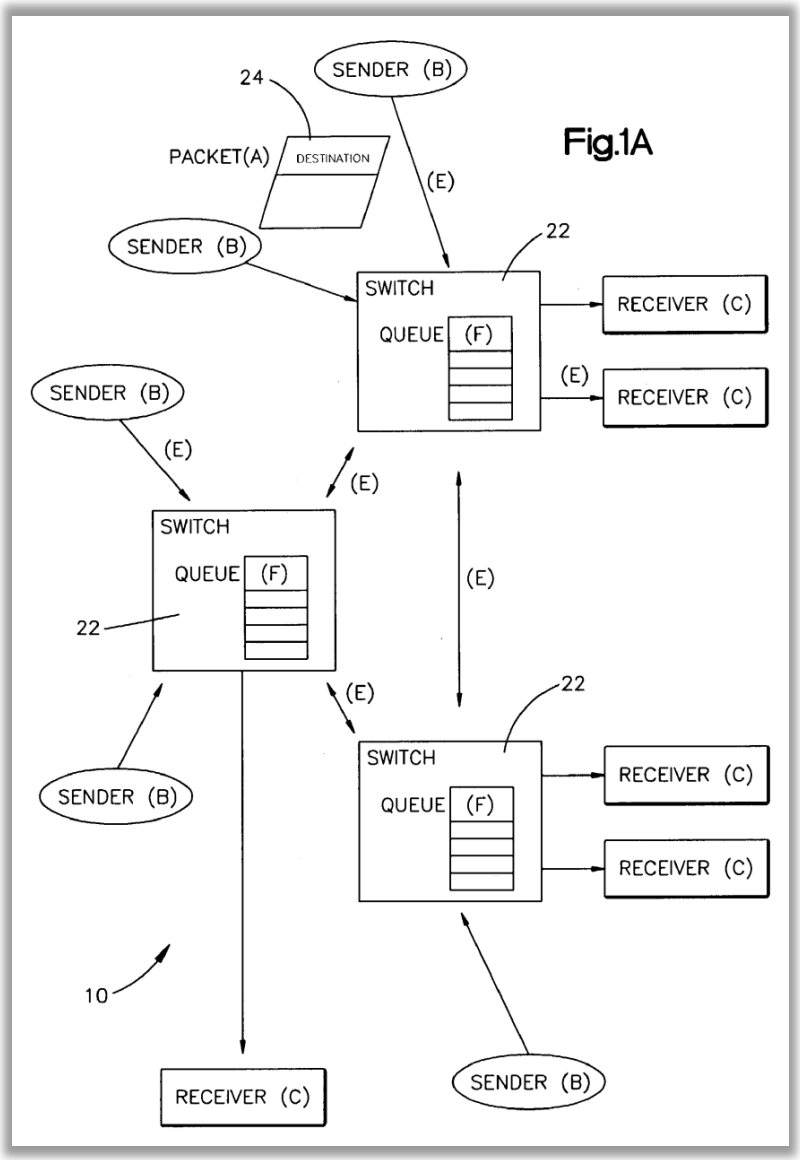

Id. at Fig. 1A.

"A packet filter 212 tests the data in each received packet of data to see if it belongs to one of the audio streams, or contains clock sync information, or not. If neither audio nor a clock packet, the packet either represents non-audio data for that node or is addressed to another node. If the packet contains non-audio data a node processor interprets that data in a conventional manner. The packet filter does this by comparing the destination address contained inside the data packet, with a list of destination addresses that the receiving terminal is programmed to accept. The list of accepted destination address numbers is programmed by a node processor 213 into the packet filter ahead of time depending on which audio channels from the network the user desires to come out of the outputs of this audio receive terminal. If the packet address does not match any

Exemplary Disclosures
of the accepted destination addresses on the list, no further action is taken on that packet and it is simply ignored. If the packet address does match an accepted address on the list, which address it matches determines the next step of processing the incoming packet." *Id.* at [0119].

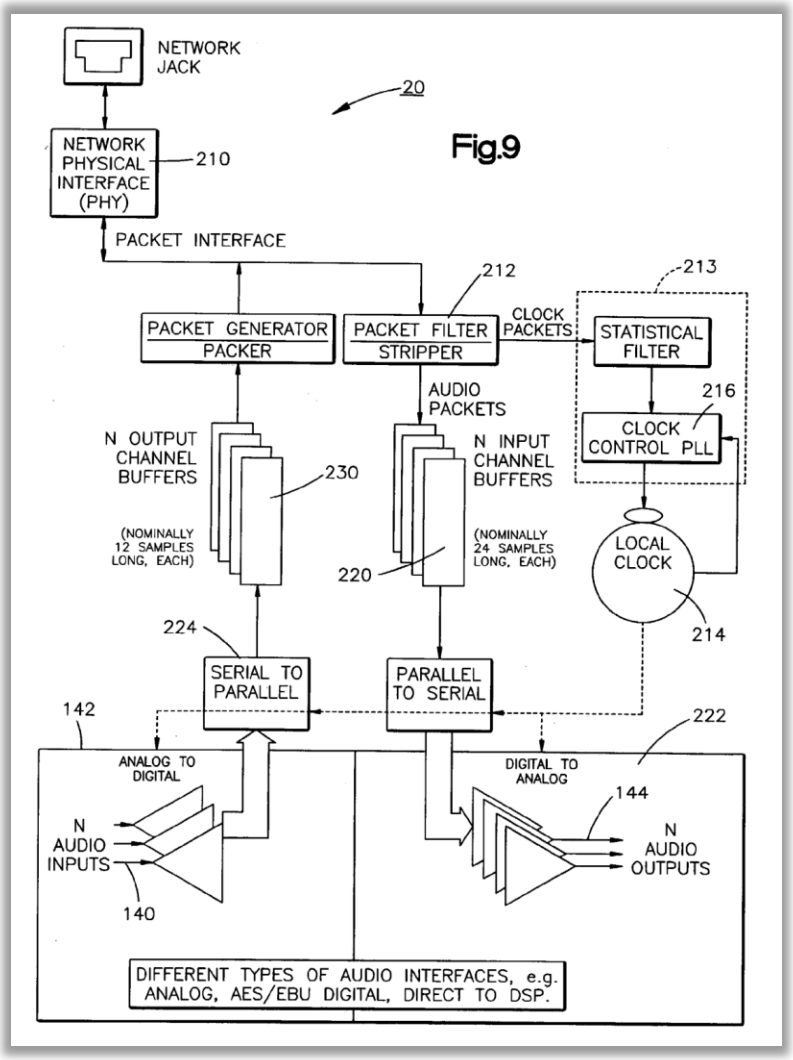

Id. at Fig. 9.

"The exemplary embodiment of the invention uses a novel design for transmitting timestamped clock references on packet switched networks allowing optimal clock synchronization recovery that is particularly advantageous for use with audio data transmission. The disclosed exemplary embodiment of the invention uses a process for sending timestamped clock references, which optimizes clock recovery when using a statistical filtering synchronization scheme in each receiver." *Id.* at [0096].

Exemplary Disclosures
"If the packet destination address matches one of the audio channel addresses on the list, then that packet is routed and stored into a corresponding audio channel buffer 220. That is, if the audio packet address matches the first audio channel address on the list, then the audio data is put into the first audio channel buffer, matching the second address on the list goes into the second audio channel buffer, and so forth The audio channel buffers 220 are maintained in FIFO order, and read out at a periodic rate determined by the local sample clock, serialized, and sent to the Digital to Analog (D/A) converter 222 to be converted into an analog audio signal output 144 (or sent to an AES/EBU transmitter to become a standard digital audio signal)." *Id.* at [0123].

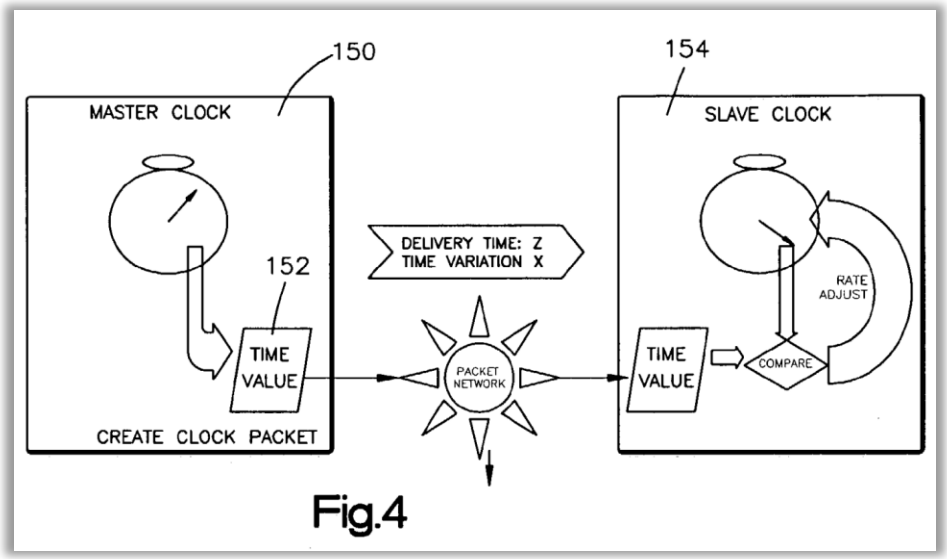

Id. at Fig. 4.

"In accordance with the invention, one terminal or node is designated to be the master clock source and implements a master clock 150 to which all the other nodes 20 are locked. (If the master clock is unplugged or fails, another node automatically takes its place in a seamless fashion.) A clock packet that contains a time value 152 is periodically sent by the source node but unlike the prior art patents referenced above this packet is not used to create time slots or to order the outputs of the transmitting terminals. Such control is not needed , because the invention uses switched Ethernet rather than a shared medium and has no need for timed access. The clock packet is not transmitted at the beginning of a sequence of audio packets. Rather, it is transmitted at a much lower rate and a PLL (Phase Locked Loop) circuit at each of the nodes increases the rate to provide a synchronized audio sample clock in receiving terminals or nodes." *Id.* at [0073].

"The ability to recover digital audio synchronization at multiple stations or nodes on the network relies on specialized statistical filtering of received timestamped clock information packets. Because packet switched networks can introduce a variable routing delay, a variable time delay is introduced into the communication of timing information, which would cause a variable

Exemplary Disclosures
timing synchronization error in all receivers. However, because the packet switched network can only add delay, it can never deliver a packet 'early'. This error is biased, and therefore can be mathematically filtered out." *Id.* at [0075]. "The master marks and communicates time reference moments to all slaves, by a broadcast or multicast method of addressing all slaves with one packet. This packet contains a time reference count, called a timestamp value 152. This timestamp value 152 is a measure of time made by the master clock device in arbitrary time units. It is important that the value 152 is to be of high enough resolution to allow very small time differences or errors to be calculated by the slaves. In the exemplary implementation, the timestamp is in units of {fraction (1/12,288,000)} Hz (approximately 80 ns)." *Id.* at [0080]. "Once the measure of the local clock time is made by the master clock 150, the resulting data packet (called a clock packet) is sent to the packet network 10 for communication to all the slaves. Each slave, when it receives a clock packet, measures it own local clock device 154, for comparison to the master clock reference value 152 communicated inside the packet. In order to synchronize the slave clock 154 to the master clock, successive comparisons between the master and slave clock values are made at the slave node. If the comparison value is getting larger over time, then the slave clock 154 is running too fast, and a rate control adjustment is made to slow the slave clock down, and vice versa if the slave clock is found to be running too slow, a rate adjustment is made to speed it up. The specific formulas used to calculate the amount of rate adjustment given the amount of observed comparison differences over time, may be many different standard control algorithms, including standard second order PLL (Phase Lock Loop), or PID (Proportional Integral Differential) control algorithms that are implemented in software." *Id.* at [0081]. "The exemplary embodiment of the invention uses a novel design for transmitting timestamped clock references on packet switched networks allowing optimal clock synchronization recovery that is particularly advantageous for use with audio data transmission. The disclosed exemplary embodiment of the invention uses a process for sending timestamped clock references, which optimizes clock recovery when using a statistical filtering synchronization scheme in each receiver." *Id.* at [0096]. "If the destination address matches the address for clock packets, then a time measurement of the local clock 214 is triggered, and the local time clock value along with the received clock packet contents is stored. This storage event notifies the software running on the node processor that a new clock packet has arrived. Software on the node processor reads the clock packet information and compares the local clock to the remote master clock by performing a histogram statistical clock filtering algorithm. The clock filtering algorithm may result in a decision to adjust the local clock to make this local clock 214 either faster or slower using a software implemented phase lock loop 216." *Id.* at [0121]. "The master marks and communicates time reference moments to all slaves, by a broadcast or multicast method of addressing all slaves with one packet. This packet contains a time reference

Exemplary Disclosures
count, called a timestamp value 152. This timestamp value 152 is a measure of time made by the master clock device in arbitrary time units." Shay at [0080]. "The exemplary embodiment of the invention uses a novel design for transmitting timestamped clock references on packet switched networks allowing optimal clock synchronization recovery that is particularly advantageous for use with audio data transmission." Shay at [0096]. "Because packet switched networks can introduce a variable routing delay, a variable time delay is introduced into the communication of timing information, which would cause a variable timing synchronization error in all receivers. However, because the packet switched network can only add delay, it can never deliver a packet 'early'. This error is biased, and therefore can be mathematically filtered out." Shay at [0075]. "Once the measure of the local clock time is made by the master clock 150, the resulting data packet (called a clock packet) is sent to the packet network 10 for communication to all the slaves. Each slave, when it receives a clock packet, measures it own local clock device 154, for comparison to the master clock reference value 152 communicated inside the packet. In order to synchronize the slave clock 154 to the master clock, successive comparisons between the master and slave clock values are made at the slave node. If the comparison value is getting larger over time, then the slave clock 154 is running too fast, and a rate control adjustment is made to slow the slave clock down, and vice versa if the slave clock is found to be running too slow, a rate adjustment is made to speed it up." Shay at [0081]. <u>US7274761B2 ("Muller")</u> "The transmitter is able to provide information to the receiver, via channel 8 that allows the receiver 6 at some future time to have a RT value which is synchronous with the value of the RT Clock 4. The receiver may update RT clock 10, accordingly." Muller at 3:10-14. "The messages 22 and 24 may be transmitted as a new form of Link Manager messages. Conventional Link Manager Messages are described in the Bluetooth specification and they are a particular form of transceiver control messages described above in relation to FIG. 7. According to the first embodiment described above, the payload of the Link Manager Message would contain {i, RT(i)}, that is an indication of a past Real Time value and an indication of the past instance at which it was valid. According to the second embodiment described above, the payload of the Link Manager Message would contain {j′ , RT(j′)}, that is an indication of a future Real Time value and an indication of the future instance at which it will be valid." Muller at 8:55-67. <u>JP2003163691A ("Yamane")</u> "If the server list from the data receiving terminal specifies that it is the master server, the master media data for the data receiving terminal in accordance with the processing as the master server, that is, the transfer rate based on its own system clock In addition to executing the distribution,

Exemplary Disclosures
a packet (synchronization packet) with a time stamp added is periodically transmitted to the slave servers listed in the server list." Yamane at [0055]. "On the other hand, if the server list from the data receiving terminal specifies that it is a slave server, the data transfer to the data receiving terminal is performed based on the process as the slave server, that is, the synchronization packet received from the master server. A process of changing the rate so as to be synchronized with the system clock of the master server is executed, and data distribution of the slave media to the data receiving terminal is executed." Yamane at [0056]. "In the data communication system of FIG. 1, a master server 120 that performs transmission of master media and a slave server 130 that performs transmission of slave media are servers that transmit different data such as different media such as image media and audio media, respectively. The media data is transmitted to the data receiving terminals 140 and 150 via the packet communication network 110. The data receiving terminals 140 and 150 receive media (data) received from the master server 120 and the slave server 130 and realize synchronized playback." Yamane at [0048]. <u>US6751228 ("Okamura")</u> "Each of the transmitting nodes 101, 102, and 103 generates a timestamp (abbreviated as "syt"), one in every 8 sampling clocks (or 8 data blocks), on the basis of the time provided by the cycle timer, for)the audio data reproduced at a predetermined sampling clock by a peripheral device connected to that transmitting node. Each transmitting node also arranges audio data of one or more channels into a data field and arranges the associated timestamp into a syt field so as to form a packet composed of the data field and the syt field, and sends the packet. The timestamp specifies the reproduction time at the receiving side of an event sequence (or an audio channel). DBC (Data Block Count) indicates the total number of data blocks sent so far. Each of the data blocks is generally made up of data of two or more event sequences generated at the same sampling time." Okamura at 1:41-56. "The apparatus comprises a timestamp output section that retrieves a timestamp contained in a packet received from a transmitting node, a data output section that reproduces event sequence data contained in the same packet received from the transmitting node, an offset setting section that sets an offset time for the receiving node relative to the transmitting node and adds the offset time to a time indicated by the timestamp retrieved by the timestamp output section, and a reproduction time control section that operates when the time of the timestamp added with the offset time coincides with a current time indicated by an internal cycle timer for controlling the data output section to effect synchronous reproduction of the event sequence data contained in the same packet as the timestamp." Okamura at 5:53-67. "On the transmitting side, the time of timestamp is set as the value of a reproduction time on the receiving side by estimating propagation delay. By adjusting the offset value on the receiving

Exemplary Disclosures
side, the time of reproducing the audio data supplied from each transmitting node can be shifted from the time of timestamp." Okamura at 24:7-13. <u>US20020018458A1 ("Aiello")</u> "The means for synchronizing the network is preferably provided by a clock master function in the master device and a clock recovery function in the slave devices. Each node device in the network system maintains a clock running at a multiple of the bit rate of transmission. The clock master function in the master device maintains a "master clock" for the network. At least once per frame, the clock master function issues a "master sync code" that is typically a unique bit pattern which identifies the sender as the clock master. The clock recovery function in the slave devices on the network carries out the operation of recovering clock information from the incoming data stream and synchronizing the slave device to the master device using one or more correlators which identifies the master sync code and a phase or delayed locked loop mechanism. In operation, the clock master issues a "master sync code" once per frame in the "master slot". A slave device trying to synchronize with the master clock will scan the incoming data stream for a master sync code using one or more correlators. As each master sync code is received, the phase or delayed locked loop mechanism is used to adjust the phase of the slave clock to that of the incoming data stream. By providing a common network clock on the master device, with slave devices synchronizing their local clocks to that of the master clock, support for synchronous and isochronous communication in additional to asynchronous communication is provided. Time reference between all device nodes is highly accurate eliminating most latency and timing difficulties in isochronous communication links." Aiello at [0026]. "This guarantees that media can be broadcast to many nodes at the same time. This method allows, for example, synchronized audio data to be sent to several speakers at the same time, and allows left and right data to be sent in the same frame." Aiello at [0024]. "The Data Recovery Unit 56 in a receiving device carries out the operation of converting the incoming pulse stream data into bit data during time slots that a transmitting device is sending data to the receiving device. In the case of on-off keying modulation, the data recovery unit 56 carries out the operation of examining the pulse stream during the designated time slot or "window" for the presence or absence of a pulse. In pulse amplitude modulation, the data recovery unit 56 carries out the operation of examining the pulse stream during the designated time slot or "window" to ascertain the amplitude of the pulse signal. The "window" or time slot in which the receiving device examines pulse stream data determined by the expected location of the bit due to the encoding mechanism and the offset determined by the phase offset detector 54. The information converted by the data de-modulation unit 34 is then communicated to the interface to data link layer 30 for further processing." Aiello at [0070]. <u>US7710941 ("Rietschel") (GOOG-SONOSITC-PA-00018781)</u> "In line with a further preferred embodiment of the present invention, at least some of the data streams or data packets are temporarily buffered in the reproduction units before reproduction,

Exemplary Disclosures
with audio files typically involving buffering in the range of approximately 1 to 5 sec. Preferably and with great advantage, e.g. in the case of realtime voice applications, the buffering is performed dynamically and so as to be matched to the circumstances of the network. The smaller the buffers, the shorter the latency for which it is necessary to wait before a stream can be played. Accordingly, it is advantageous to use the smallest possible buffers. The higher the quality of the network used, the smaller the buffers can be made, since in this case fewer failures occur and accordingly also fewer repetitions are necessary. Dynamic allocation of the buffer takes optimum account of this circumstance and can accordingly be used to optimize the latency. This buffering, which preferably takes place in a 'ring buffer', firstly permits accurate synchronization, because the output pointer on the master and on the slave is simply set to be the same, and secondly this also makes correction mechanisms ('retry protocols') much more easily possible, which is of great significance within the context of the data integrity that is the aim here." Rietschel at 3:56-4:9. "A further preferred embodiment is characterized in that the data packets or data streams are read from a data source into a ring buffer in the master, with each byte read in being provided with a unique address (simply a 32-bit counter, starting at 0), and in that, in a process which is independent of the data stream's being read into the ring buffer, the master sends the data to the network from the ring buffer in blocks, particularly straight after reading in, by broadcast, particularly by UDP broadcast, and also particularly by multicast, with the addition of a protocol header which contains, inter alia, the address of the first byte sent, the precise master time and the address of the next byte which is to be sent by the master to the codec of the master. In principle, the data can be forwarded from the master to the slaves in different ways. The simplest approach is a 'unicast', i.e. the master sends the data separately to each further slave. When a plurality are present, however, this even results in unnecessary loading of the network. Accordingly, the distribution should preferably be performed in optimized fashion such that the master forwards the data to all further reproduction units using a multicast. The required bandwidth thus remains largely constant regardless of the number of slaves (only any further synchronization packets are added for the time alignment, which take up virtually no bandwidth)." Rietschel at 4:49-5:4. "The content of these audio data may possibly be obtained from the master or from another data source (a tuner for receiving radio input is also conceivable)." Rietschel at 7:33-35. "In a process which is independent of receipt of the tcp stream, the master sends the data from the ring buffer in blocks, immediately after they arrive, by UDP broadcast to the network, supplemented by a protocol header, which inter alia contains the 'address' of the first byte sent, the exact master time, the address of the next byte which is to be sent to the codec by the master etc. This is shown in FIG. 2 b). The ring buffer 5 is constantly filled with data. The output pointer 6 is at a particular location and sends the data read there to the local codec/converter for reproduction. The output pointer 6 moves forward (cf. direction of arrow) in line with the internal clock of the master. The data input pointer 8 indicates that position at which the data received from a server are currently being read into the ring buffer 5. Essentially directly 'behind it' in the reading direction is the data forwarding pointer 10, which indicates the position at

Exemplary Disclosures
which the data which the ring buffer 5 contains are forwarded from the master to the slaves via a multicast/broadcast. In this case, the reference symbol 12 indicates a typical data packet. The ring memory 5 accordingly contains a 'stock of data' 9, the fundamental part of which is available for any 'retry protocols' which may be required (cf. below). Typically, this stock of data comprises between approximately 1 and 4 seconds of data. The safety area directly before the output pointer 6 is no longer available for correction protocols, since the output pointer can no longer be transferred in appropriate fashion." Rietschel at 10:56-11:13. "The slave receives these datagrams and itself enters the received data into a ring buffer 5. The protocol header is evaluated directly, specifically by virtue of the master time being checked for accuracy and the information 'master time/current byte' (which is the current moment of playback) being temporarily buffered or used to move the output pointer 6 to a correct location or to adjust the latter's operating characteristics. The ring buffer 5 of the slave is shown in FIG. 2 a). The data input pointer 7 is at the position of the master's data forwarding pointer 10 (naturally taking into account the propagation time over the network), and ideally the data output pointer 6 is at the same location as the master." Rietschel at 11:14-25. "A further improvement in the coordination and particularly in the control between master and reproduction units or slaves can be achieved by using the data streams or data packets to send at least one command to the reproduction units together with an associated execution time. By way of example, it is possible to transfer commands such as Pause, Play, Stop etc. in this context. Preferably, the execution time should be chosen such that at least the longest network delay time established in the network between the master and the reproduction unit can elapse between the transfer of the command to the network and the execution time. It is thus possible to ensure that when the command arrives at the respective reproduction unit the execution time is not yet in the past." Rietschel at 6:17-29. "In a process which is independent of receipt of the tcp stream, the master sends the data from the ring buffer in blocks, immediately after they arrive, by UDP broadcast to the network, supplemented by a protocol header, which inter alia contains the 'address' of the first byte sent, the exact master time, the address of the next byte which is to be sent to the codec by the master etc. This is shown in FIG. 2 b). The ring buffer 5 is constantly filled with data. The output pointer 6 is at a particular location and sends the data read there to the local codec/converter for reproduction. The output pointer 6 moves forward (cf. direction of arrow) in line with the internal clock of the master. The data input pointer 8 indicates that position at which the data received from a server are currently being read into the ring buffer 5. Essentially directly 'behind it' in the reading direction is the data forwarding pointer 10, which indicates the position at which the data which the ring buffer 5 contains are forwarded from the master to the slaves via a multicast/broadcast. In this case, the reference symbol 12 indicates a typical data packet. The ring memory 5 accordingly contains a 'stock of data' 9, the fundamental part of which is available for any 'retry protocols' which may be required (cf. below). Typically, this stock of data comprises between approximately 1 and 4 seconds of data. The safety area directly before

Exemplary Disclosures
the output pointer 6 is no longer available for correction protocols, since the output pointer can no longer be transferred in appropriate fashion." Rietschel at 10:56-11:13. "The slave receives these datagrams and itself enters the received data into a ring buffer 5. The protocol header is evaluated directly, specifically by virtue of the master time being checked for accuracy and the information 'master time/current byte' (which is the current moment of playback) being temporarily buffered or used to move the output pointer 6 to a correct location or to adjust the latter's operating characteristics. The ring buffer 5 of the slave is shown in FIG. 2 a). The data input pointer 7 is at the position of the master's data forwarding pointer 10 (naturally taking into account the propagation time over the network), and ideally the data output pointer 6 is at the same location as the master." Rietschel at 11:14-25. "e) If the table contains sufficiently meaningful data, evaluation takes place. To this end, the difference (current slave time minus slave transmission time) is formed for each telegram and a check is performed to determine whether the telegram was in transit for a long time (large difference). Only the telegrams with the smallest difference are taken, and it can normally be assumed that if the units are the same then the transmission time is divided up approximately symmetrically over the two transmission paths. This means that a "master time" which is independent of the normal slave time can be synchronized to the master very accurately in the slave." Rietschel at 9:56-67. "In the present case, the procedure is as follows: The approach used is to request the time from the server taking into account the average propagation time for the data. The unit itself takes its current time and measures the time taken for the response from the server. This response contains the current server time at the time at which the request arrives. If this operation is carried out a number of times, slight fluctuations in the data propagation times can be compensated for: a) Slave sends UDP datagram to the station to which it wishes to be synchronized, and requests the current time thereon. The telegram indicates its 'own' time (transmission time). b) The telegram is provided with the local (master) time by the receiver, the 'slave' transmission time being maintained, and is returned to the slave. c) The slave receives the telegram returned by the master and enters it into a table, with the reception time being noted. d) Steps a-c take place a plurality of times (e.g. at least 8× in the case of first synchronization, 3× in the case of resynchronization), with the aim of obtaining as accurate a result as possible through averaging by omitting extreme values. e) If the table contains sufficiently meaningful data, evaluation takes place. To this end, the difference (current slave time minus slave transmission time) is formed for each telegram and a check is performed to determine whether the telegram was in transit for a long time (large

Exemplary Disclosures
difference). Only the telegrams with the smallest difference are taken, and it can normally be assumed that if the units are the same then the transmission time is divided up approximately symmetrically over the two transmission paths. This means that a "master time" which is independent of the normal slave time can be synchronized to the master very accurately in the slave." Rietschel at 9:35-67. "In a process which is independent of receipt of the tcp stream, the master sends the data from the ring buffer in blocks, immediately after they arrive, by UDP broadcast to the network, supplemented by a protocol header, which inter alia contains the 'address' of the first byte sent, the exact master time, the address of the next byte which is to be sent to the codec by the master etc. This is shown in FIG. 2 b). The ring buffer 5 is constantly filled with data. The output pointer 6 is at a particular location and sends the data read there to the local codec/converter for reproduction. The output pointer 6 moves forward (cf. direction of arrow) in line with the internal clock of the master. The data input pointer 8 indicates that position at which the data received from a server are currently being read into the ring buffer 5. Essentially directly 'behind it' in the reading direction is the data forwarding pointer 10, which indicates the position at which the data which the ring buffer 5 contains are forwarded from the master to the slaves via a multicast/broadcast. In this case, the reference symbol 12 indicates a typical data packet. The ring memory 5 accordingly contains a 'stock of data' 9, the fundamental part of which is available for any 'retry protocols' which may be required (cf. below). Typically, this stock of data comprises between approximately 1 and 4 seconds of data. The safety area directly before the output pointer 6 is no longer available for correction protocols, since the output pointer can no longer be transferred in appropriate fashion." Rietschel at 10:56-11:13. "To achieve this object, the reproduction using the at least two reproduction units is synchronized either by virtue of one of the reproduction units, as master, prescribing its internal clock as reference and the other reproduction units, as slaves, aligning their internal clock with that of the master via the network and reproducing data streams or data packets on the basis of this aligned clock, or by virtue of the internal clock of an external unit which is likewise available on the network being used as master and all reproduction units, as slaves, aligning their internal clock with that of the master via the network and reproducing data streams or data packets on the basis of this aligned clock." Rietschel at 1:48-58. "The essence of the invention thus involves ensuring that the individual reproduction units are synchronized by defining a reference clock. In this context, the term clock is not intended to be understood in the exact sense, but rather simply in the sense of a timing reference system within which all stations in the system, i.e. master and slave, are in sync. In other words, it may be that the clock mentioned in this instance absolutely does not correspond to the actual time while its speed of operation differs from the speed of operation of a clock, too. The only matter of importance is that the individual stations operate together in an identical, synchronized time system. In other words, the slaves may simply have a clock which is in sync with the master or may have a synchronously operating reference system for reproducing the data, which clock or which reference system does not need to be identical to the actual clock which is available on the slave. To a certain extent, the slaves then carry a separate copy of the master clock. The

Exemplary Disclosures
synchronization which is fundamental within the context of this invention thus does not primarily aim to be able to ensure 'realtime' conditions but rather aims to ensure the highest possible level of data integrity, with the moment of playback not being of greatest significance, but rather just the relative synchronization. A fundamental factor in the proposed synchronization system is that it is not the master which has the task of keeping the individual slaves in time, but rather the individual slaves which independently have responsibility for aligning themselves with the master and effect this independently. This results in the advantage that the master does not necessarily need to be informed about what kind of other stations are currently operating together in sync in the network. This significantly simplifies the management of a system. The master merely makes its clock available and the master itself does not modify this reference system, however much it may differ from an actual time." Rietschel at 1:59-2:24. <u>US7392102 ("Sullivan") (GOOG-SONOSITC-PA-00020044)</u> "The present invention provides a method and apparatus for synchronizing the audio playback of several devices by using an audio waveform sample. One device can determine whether a specific section of the digital audio stream is being played either behind or ahead of the same section being played on another device, the reference device. It requires that the reference device transfer to the second device a brief portion of a digital waveform it is playing (a series of digital audio samples), along with the exact time at which this waveform is expected to play. The second device locates the same waveform sample in its stream, and can then use it as a reference to adjust its own playback of the audio stream to be in sync with the reference. The waveform is only a small part of the audio stream—it might be a small set of sequential audio samples, or a set of every nth audio sample, to be determined by empirical test." Sullivan at 3:30-45. "In addition to this synchronization, a regularly scheduled audio waveform sample is also broadcast. The audio waveform sample may be used as a triggering metric for audio output according to the attached tag thus assuring the simultaneous output of audio from multiple devices. The audio waveform sample may also be used to determine the time the device takes to process the signal from the buffer to the actualized audio output. This delay is added to the communication delay to better synchronize the audio output between multiple output devices. The effect of the process is that all devices receiving the data are able to output them simultaneously, taking both communication and processing latency into consideration." Sullivan at 3:2-14. "PCA transmits to PCB 1) the waveform segment, 2) the exact (delayed) time it is to be played, and 3) PCB's actual latency value. PCB examines its own audio stream, beginning at the current location playing minus the latency value, in other words, it is looking for the spot in the audio that was playing when PCA captured and transmitted the audio segment. PCB searches forward and backward from that spot until it locates the audio segment. PCB synchronizes its audio playback with PCA by delaying the playback until the audio segment is exactly aligned with the exact playback time received from PCA." Sullivan at 7:11-21.

Exemplary Disclosures
"The transmitting device might or might not be playing audio and does not have to be in sync with the receivers. If the transmitting device is local and playing audio, it would participate in the same synchronized audio playback method." Sullivan at 4:1-4. "FIG. 1 illustrates a system of several devices. Transmitting device PCA sends the audio stream, sync information, and time and other data to receiving devices PCn, such as PCB and PCC. Transmitting device PCA controls audio playback for the system. The audio signal is actually transmitted by audio source 5 to PCA and other devices PCn, such as PCB. The devices may be interconnected by a bus cabling or may communicate with one another through wireless communication such as radio frequency or infrared." Sullivan at 4:5-13. "The present invention provides a method and apparatus for synchronizing the audio playback of several devices by using an audio waveform sample. One device can determine whether a specific section of the digital audio stream is being played either behind or ahead of the same section being played on another device, the reference device. It requires that the reference device transfer to the second device a brief portion of a digital waveform it is playing (a series of digital audio samples), along with the exact time at which this waveform is expected to play. The second device locates the same waveform sample in its stream, and can then use it as a reference to adjust its own playback of the audio stream to be in sync with the reference. The waveform is only a small part of the audio stream—it might be a small set of sequential audio samples, or a set of every nth audio sample, to be determined by empirical test." Sullivan at 3:30-45. "PCA transmits to PCB 1) the waveform segment, 2) the exact (delayed) time it is to be played, and 3) PCB's actual latency value. PCB examines its own audio stream, beginning at the current location playing minus the latency value, in other words, it is looking for the spot in the audio that was playing when PCA captured and transmitted the audio segment. PCB searches forward and backward from that spot until it locates the audio segment. PCB synchronizes its audio playback with PCA by delaying the playback until the audio segment is exactly aligned with the exact playback time received from PCA." Sullivan at 7:11-21. "FIG. 1 illustrates a system of several devices. Transmitting device PCA sends the audio stream, sync information, and time and other data to receiving devices PCn, such as PCB and PCC. Transmitting device PCA controls audio playback for the system. The audio signal is actually transmitted by audio source 5 to PCA and other devices PCn, such as PCB. The devices may be interconnected by a bus cabling or may communicate with one another through wireless communication such as radio frequency or infrared." Sullivan at 4:5-13. "In an exemplary embodiment, as shown in FIG. 6, the method includes the following steps. First, the clock synchronizer utilizes the latency detector (above) to determine the average amount of time it takes for a signal to travel from the reference computer or device (PCA) to another device (PCB). Second, PCA fetches its own time, adds the latency value to it and sends it to PCB. Third, PCB takes this time value and adds a known value representing the time it

Exemplary Disclosures
takes for the operating system (OS) to respond to a 'time set' command, and sets its own time accordingly." Sullivan at 5:66-6:8. "An exemplary hardware implementation of the circuitry is shown in FIGS. 7 and 9. FIG. 7 refers to circuitry on PCA; FIG. 9 refers to circuitry on PCn. The circuitry of FIGS. 7 and 9 may be combined on either PCA or PCn. ALU 590 adds the latency to PCA time to derive the time to be sent to PCn. The base clock which serves for internal timing of PCA clocks latch 600. This latch stores the PCA with added latency time. FIG. 9 shows a like circuit on receiving device PCn. The ALU 610 causes the addition to or subtraction from the time drift with respect to the PCA with added latency time. The latch 620 stores the value for the PCn time." Sullivan at 6:9-19. "A time drift detector is a simple process by which a device that is periodically receiving a time standard from the clock synchronizer checks for the amount that its own clock is drifting from the time standard, and compensates for it by periodically adding or subtracting from its own clock. It assumes that a device's system clock might drift, fast or slow, relative to the master device's clock, and that the rate of drift is constant. The time drift detector may be implemented in hardware, software, or a combination of hardware and software." Sullivan at 6:20-29.
13[pre] A tangible, non-transitory computer-readable media having instructions stored thereon that, when executed by a first zone player, cause the first zone player comprising one or more processors and at least one network interface to perform a method comprising:
The disclosures listed under claim element 13[pre] in Exhibits 715-01 through 715-09 demonstrate that the limitation was known and a POSITA would have been motivated to incorporate it into an existing audio system. Defendant incorporates by reference each of those disclosures here. *See* claims 7[pre] and 7[a]-7[c], *supra*.
13[a] performing a master device role for a synchrony group comprising the first zone player and a second zone player, wherein in the master device role, the first zone player is configured to control synchronous playback of audio information by both the first zone player and the second zone player in response to playback commands received from a controller device via a network interface of the first zone player;
The disclosures listed under claim element 13[a] in Exhibits 715-01 through 715-09 demonstrate that the limitation was known and a POSITA would have been motivated to incorporate it into an existing audio system. Defendant incorporates by reference each of those disclosures here. *See* claim 7[d], *supra*.

Exemplary Disclosures
13[b] while performing the master device role, evaluating one or more operational performance metrics of the one or more processors or the at least one network interface indicating potential degradation in performance of synchronous playback of information content by both the first and second zone player, and based on the evaluation, determining that the second zone player should perform the master device role for the synchrony group;
The disclosures listed under claim element 13[b] in Exhibits 715-01 through 715-09 demonstrate that the limitation was known and a POSITA would have been motivated to incorporate it into an existing audio system. Defendant incorporates by reference each of those disclosures here. *See* claim 7[e], *supra*.
13[c] in response to determining that the second zone player should perform the master device role for the synchrony group, initiating migration of the master device role from the first zone player to the second zone player; and
The disclosures listed under claim element 13[c] in Exhibits 715-01 through 715-09 demonstrate that the limitation was known and a POSITA would have been motivated to incorporate it into an existing audio system. Defendant incorporates by reference each of those disclosures here. *See* claim 7[f], *supra*.
13[d] after migration of the master device role from the first zone player to the second zone player, ceasing to perform the master device role for the synchrony group, and playing back information content in synchrony with the second zone player while the second zone player is performing the master device role for the synchrony group.
The disclosures listed under claim element 13[d] in Exhibits 715-01 through 715-09 demonstrate that the limitation was known and a POSITA would have been motivated to incorporate it into an existing audio system. Defendant incorporates by reference each of those disclosures here. *See* claim 7[g], *supra*.
15. The tangible, non-transitory computer-readable media of claim 13, wherein while performing the master device role, evaluating one or more operational performance metrics of the one or more processors or the at least one network interface indicating potential degradation in performance of synchronous playback of information content by both the first and second zone player comprises the first zone player determining that migrating the master device role from the first zone player to the second zone player would improve latency of message transmission within the synchrony group.

Exemplary Disclosures
The disclosures listed under claim element 15 in Exhibits 715-01 through 715-09 demonstrate that the limitation was known and a POSITA would have been motivated to incorporate it into an existing audio system. Defendant incorporates by reference each of those disclosures here. *See* claim 9, *supra*.
17. The tangible, non-transitory computer-readable media of claim 13, wherein the first zone player performing the master device role for the synchrony group comprises the first zone player transmitting to at least the second zone player: (i) a network address that the first zone player uses to transmit audio information, (ii) audio information, and (iii) playback timing information for audio information.
The disclosures listed under claim element 17 in Exhibits 715-01 through 715-09 demonstrate that the limitation was known and a POSITA would have been motivated to incorporate it into an existing audio system. Defendant incorporates by reference each of those disclosures here. *See* claim 11, *supra*.