US 20080249569A1

(19) United States

(12) Patent Application Publication

Waugh et al.

(10) Pub. No.: US 2008/0249569 A1

(43) Pub. Date: Oct. 9, 2008

(54) IMPLANT FACE PLATES

(75) Inventors: **Lindsey G. Waugh**, Memphis, TN (US); **Jason A. Edie**, Memphis, TN (US); **Matthew D. Schultz**, Memphis, TN (US)

Correspondence Address:
**HAYNES AND BOONE, LLP**
**901 Main Street, Suite 3100**
**Dallas, TX 75202 (US)**

(73) Assignee: **WARSAW ORTHOPEDIC, INC.**, Warsaw, IN (US)

(21) Appl. No.: **11/695,883**

(22) Filed: **Apr. 3, 2007**

**Publication Classification**

(51) **Int. Cl.**
*A61B 17/70* (2006.01)
*A61F 2/44* (2006.01)

(52) **U.S. Cl.** ..... **606/249**; 623/17.16

(57) **ABSTRACT**

A faceplate for at least partially covering a plurality of anchor member apertures in an implantable member includes a main body sized to at least partially overlap the plurality of anchor member apertures of the implantable member and configured to inhibit anchor member back-out from the plurality of anchor member apertures. A locking tab may be associated with the main body, the locking tab being formed to at least partially elastically deform to engage the implantable member and secure the main body in place.

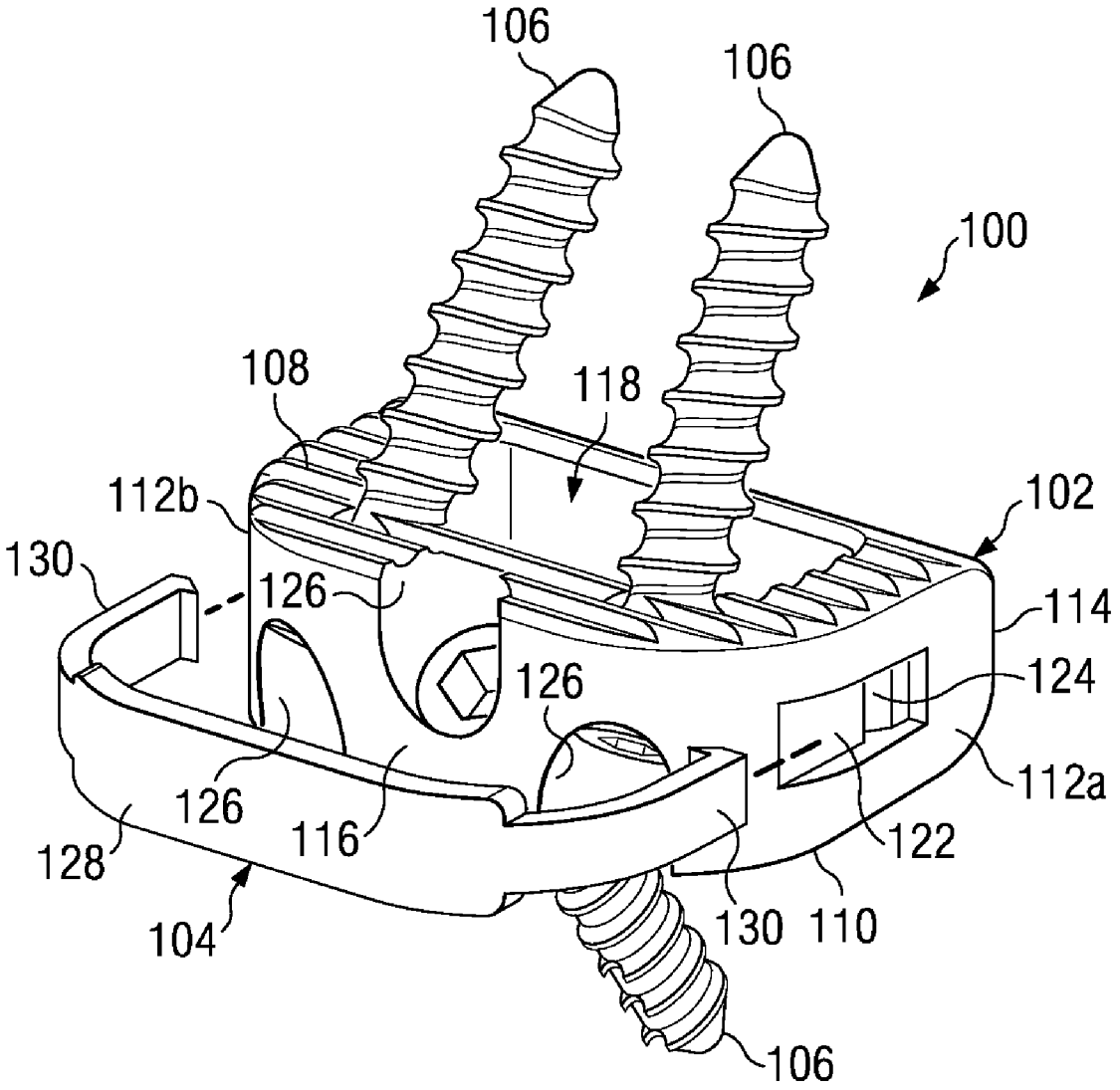




MEDTRONIC EXHIBIT 1006

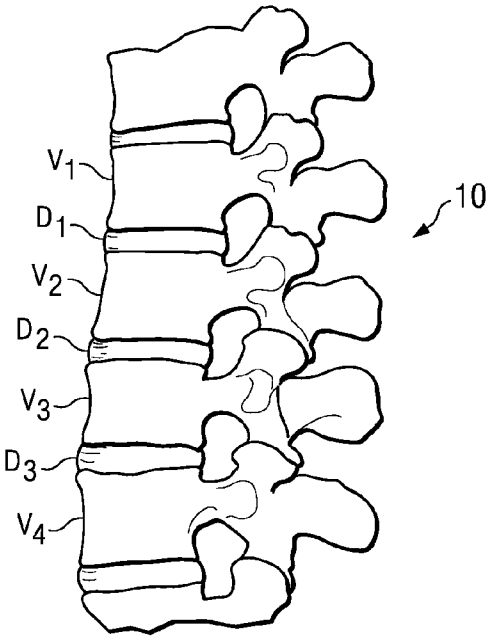


Fig. 1

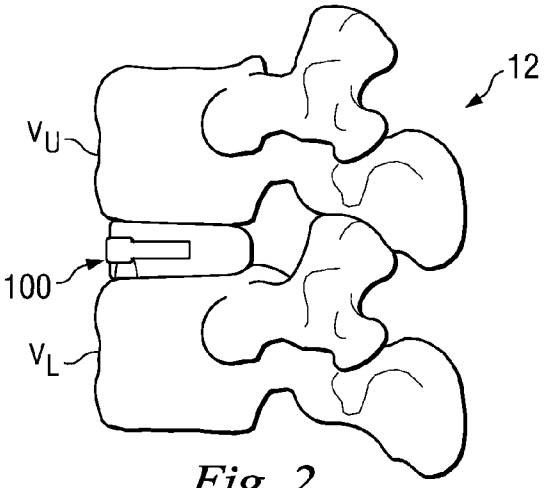


Fig. 2

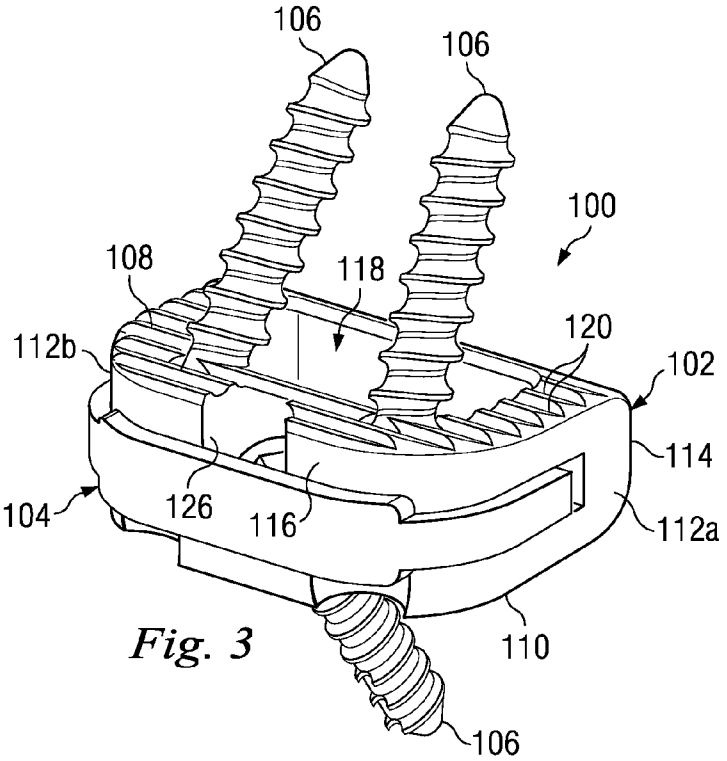


Fig. 3

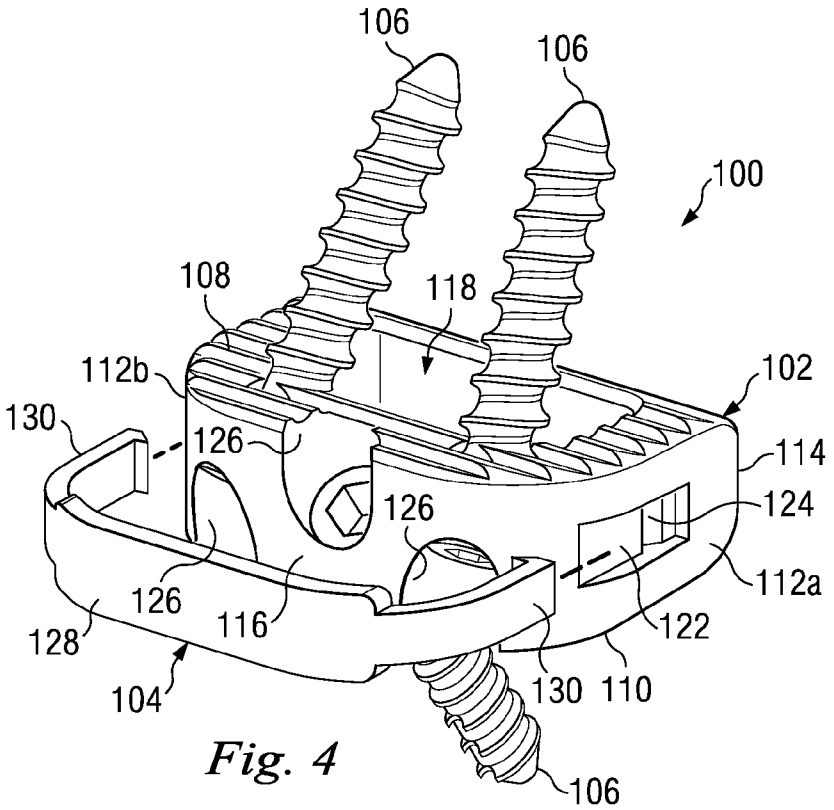
106
106
100
108
118
112b
102
130
126
114
126
124
112a
126
116
122
128
104
130
110
106

*Fig. 4*

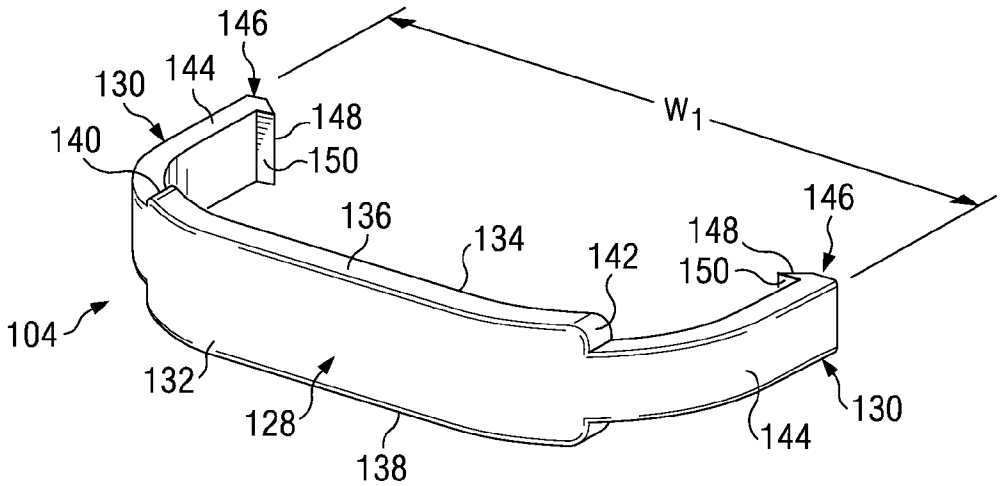
146
130
144
148
140
150
$W_1$
146
136
134
148
142
150
104
132
128
130
144
138

*Fig. 5*

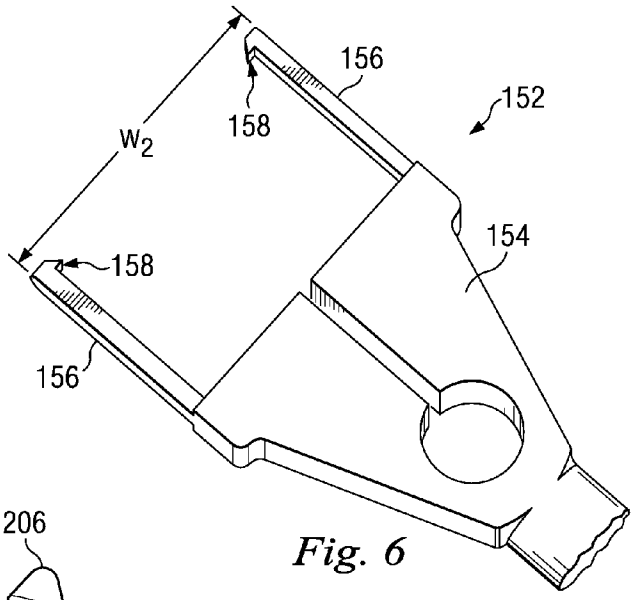


Fig. 6

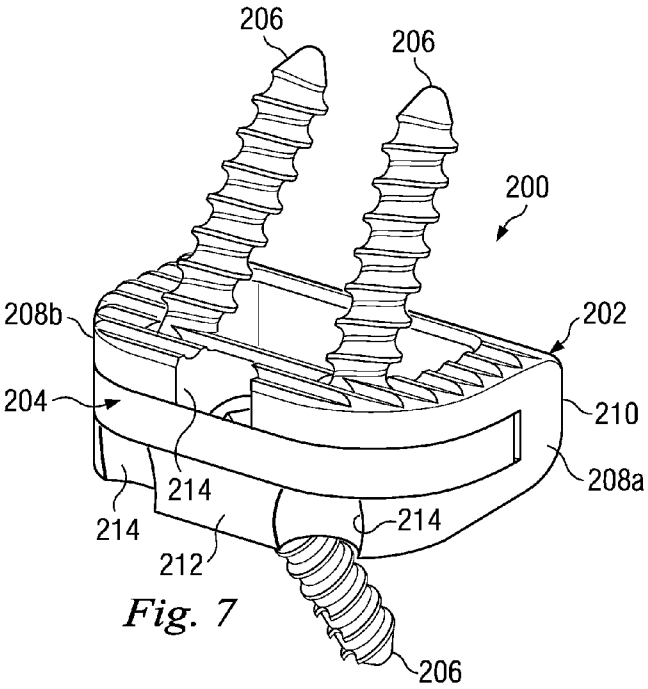


Fig. 7

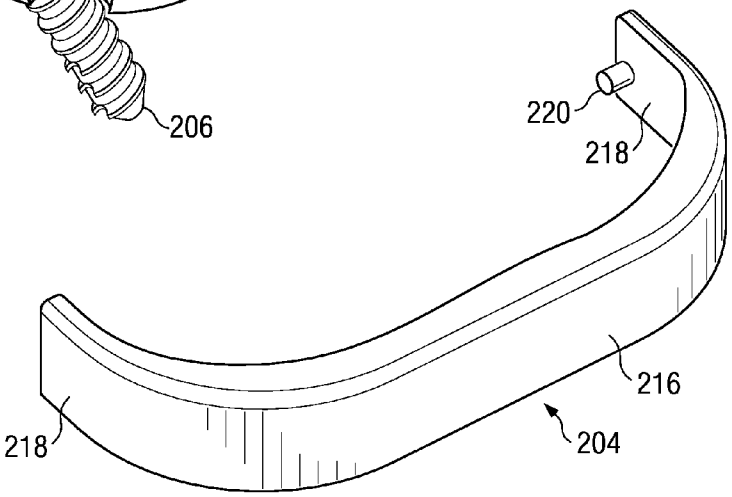


Fig. 8

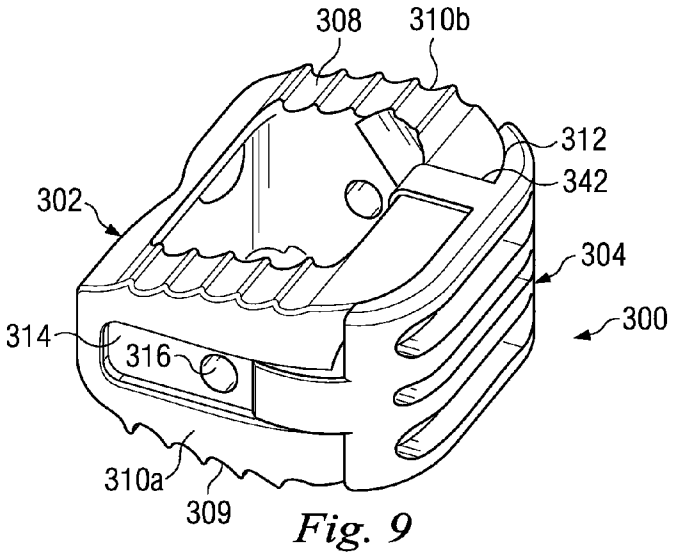


*Fig. 9*

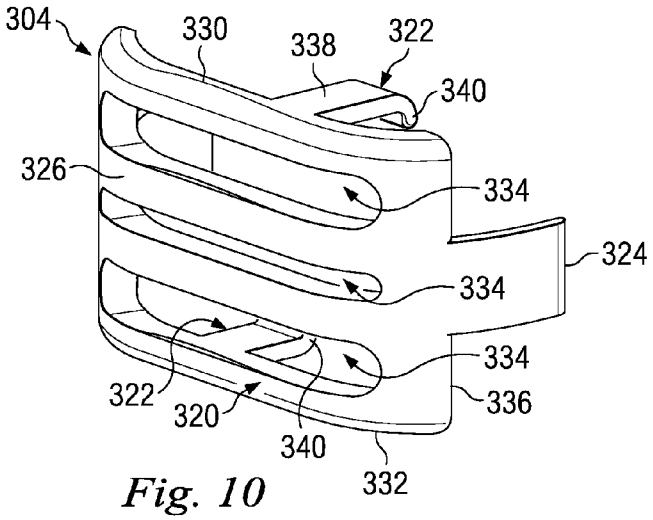


*Fig. 10*

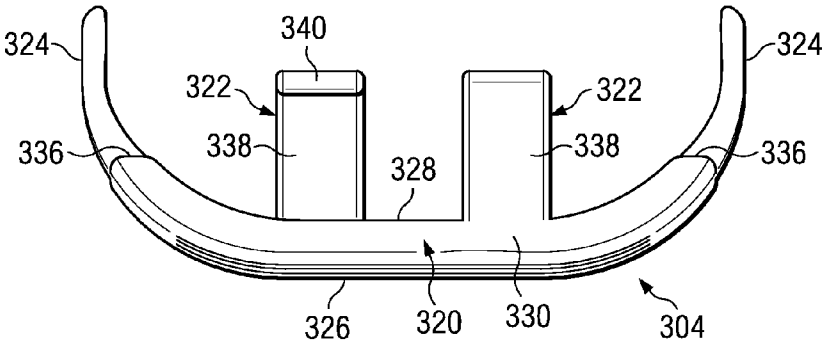


*Fig. 11*

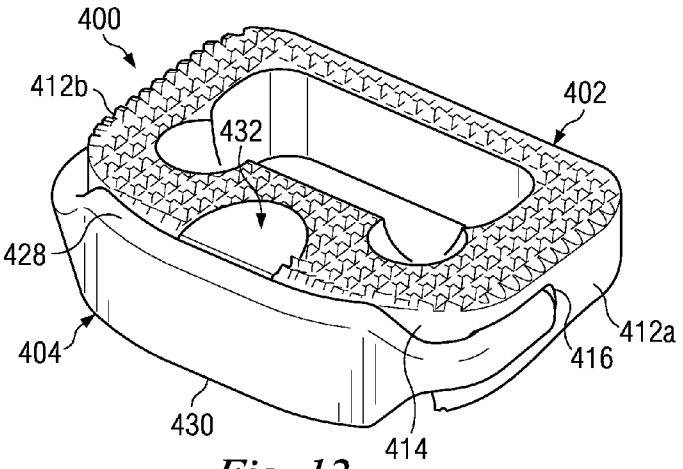


*Fig. 12*

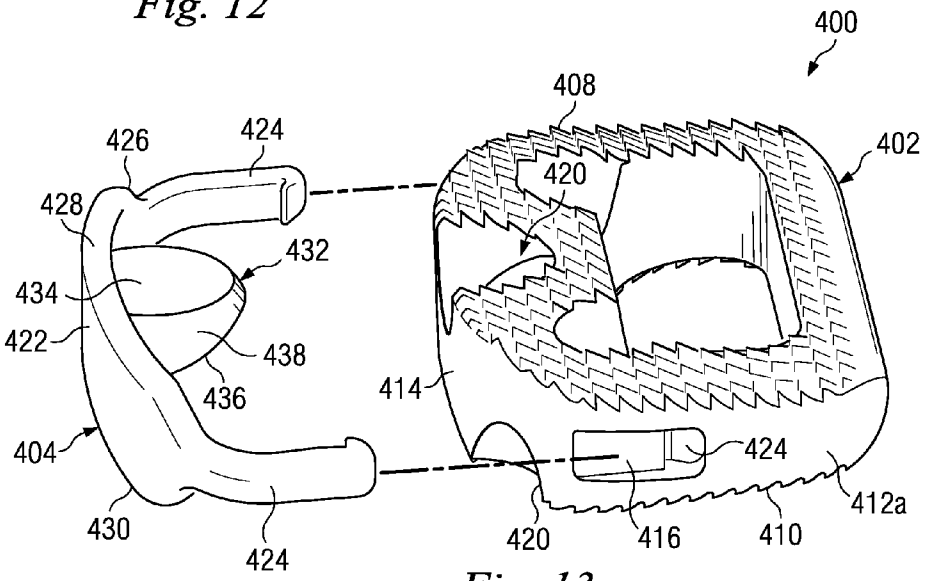


*Fig. 13*

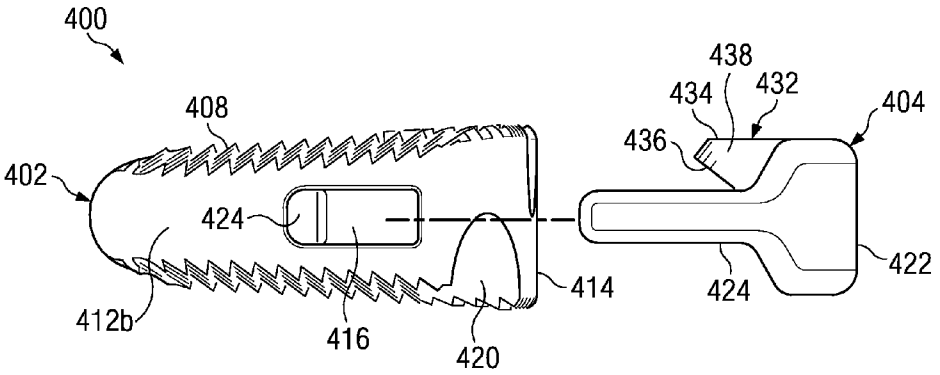


*Fig. 14*

# IMPLANT FACE PLATES

## FIELD OF THE INVENTION

**[0001]** The present invention relates generally to the field of replacing portions of the human structural anatomy with medical implants.

## BACKGROUND

**[0002]** Spinal discs between the endplates of adjacent vertebrae in a spinal column of the human body provide critical support. However, due to injury, degradation, disease or the like, these discs can rupture, degenerate and/or protrude to such a degree that the intervertebral space between adjacent vertebrae collapses as the disc loses at least a part of its support function. This can cause impingement of the nerve roots and severe pain. In some cases, surgical correction may be required.

**[0003]** Some surgical corrections include the removal of the natural spinal disc from between the adjacent vertebrae. In order to preserve the intervertebral disc space for proper spinal-column function, an implant member can be inserted between the adjacent vertebrae.

**[0004]** Some implant members employ anchor members that fix the implant member in place between the adjacent vertebrae. Over time, due to micro motion of the vertebrae relative to the implant member, the anchor members may loosen and start to back out of vertebrae.

**[0005]** What is needed is an implant that reduces or eliminates anchor member back-out. The implants disclosed herein address one or more deficiencies in the art.

## SUMMARY

**[0006]** In one exemplary aspect, the present disclosure is directed to an implantable medical device attachable to bone structure using an anchor member. The device may include an implant member including an anchor member aperture sized to receive the anchor member, and also may include a faceplate sized to overlap at least a portion of the anchor member aperture and inhibit back-out of the anchor member from the anchor member aperture. The faceplate may be configured to snap onto the implantable member.

**[0007]** In another exemplary aspect, the present disclosure is directed to a faceplate for at least partially covering a plurality of anchor member apertures in an implantable member. The faceplate may include a main body sized to at least partially overlap the plurality of anchor member apertures of the implantable member and configured to inhibit anchor member back-out from the plurality of anchor member apertures. A locking tab may be associated with the main body, the locking tab being formed to at least partially elastically deform to engage the implantable member and secure the main body in place.

**[0008]** In yet another exemplary aspect, the present disclosure is directed to a method including introducing an implant member to a vertebral segment comprising an upper and a lower vertebra. Anchor members may be inserted through anchor member apertures in the implant member, the anchor members penetrating the upper and the lower vertebrae. The faceplate may be oriented to at least partially overlap the anchor member apertures, and the faceplate may be advanced until it snaps onto the implant member to inhibit anchor member back-out.

**[0009]** Further aspects, forms, embodiments, objects, features, benefits, and advantages of the present invention shall become apparent from the detailed drawings and descriptions provided herein.

## BRIEF DESCRIPTION OF THE DRAWINGS

**[0010]** FIG. **1** is an illustration of a lateral view of a segment of a lumbar spine.

**[0011]** FIG. **2** is an illustration of a lateral view of a spinal segment formed by two vertebrae with an exemplary implantable device disposed therebetween.

**[0012]** FIG. **3** is an illustration of a perspective view of the exemplary implant shown in FIG. **2**.

**[0013]** FIG. **4** is an illustration of a partially exploded perspective view of the exemplary implant shown in FIG. **2**.

**[0014]** FIG. **5** is an illustration of a perspective view of an exemplary face plate portion of the exemplary implant shown in FIG. **2**.

**[0015]** FIG. **6** is an illustration of an exemplary insertion tool usable with the exemplary implantable device illustrated in FIG. **2**.

**[0016]** FIG. **7** is an illustration of a perspective view of another exemplary implantable device.

**[0017]** FIG. **8** is an illustration of a perspective view of an exemplary face plate portion of the exemplary implant shown in FIG. **7**

**[0018]** FIG. **9** is an illustration of a perspective view of another exemplary implantable device without the anchor members.

**[0019]** FIG. **10** is an illustration of a perspective view of an exemplary face plate portion of the exemplary implantable device in FIG. **9**.

**[0020]** FIG. **11** is an illustration of a top view of the exemplary face plate portion shown in FIG. **10**.

**[0021]** FIG. **12** is an illustration of a perspective view of another exemplary implantable device without the anchor members.

**[0022]** FIG. **13** is an illustration of an exploded perspective view of the exemplary implant shown in FIG. **12**.

**[0023]** FIG. **14** is an illustration of a lateral view of the exploded exemplary implant shown in FIG. **9**.

## DETAILED DESCRIPTION

**[0024]** For the purposes of promoting an understanding of the principles of the invention, reference will now be made to the embodiments, or examples, illustrated in the drawings and specific language will be used to describe the same. It will nevertheless be understood that no limitation of the scope of the invention is thereby intended. Any alterations and further modifications in the described embodiments, and any further applications of the principles of the invention as described herein are contemplated as would normally occur to one skilled in the art to which the invention relates.

**[0025]** FIG. **1** shows a lateral view of a portion of a spinal column **10**, illustrating a group of adjacent upper and lower vertebrae V**1**, V**2**, V**3**, V**4** separated by natural intervertebral discs D**1**, D**2**, D**3**. The illustration of four vertebrae is only intended as an example. Another example would be a sacrum and one vertebra.

**[0026]** For the sake of further example, two of the vertebrae will be discussed with reference to a spinal segment **12** shown in FIG. **2**. An upper vertebra **14** and a lower vertebra **16**, which may be any of the vertebrae V**1**, V**2**, V**3**, V**4**, define the spinal

segment **12**. Although the illustrations of FIGS. **1** and **2** generally depict a lumbar vertebrae and a lumbar vertebral segment, it is understood that the devices, systems, and methods of this disclosure may also be applied to all regions of the vertebral column, including the cervical and thoracic regions.

**[0027]** Some types of disc arthroplasty require that some or the entire natural disc that would have been positioned between the two vertebrae **14**, **16** be removed via a discectomy or a similar surgical procedure. Removal of the diseased or degenerated disc results in the formation of an intervertebral space between the upper and lower vertebrae **14**, **16**. Once the diseased or degenerated disc is removed, an implantable prosthetic device may be used to maintain the vertebral spacing and provide vertebral support. As shown in FIG. **2**, an implantable device, referenced herein by the reference numeral **100**, resides within the vertebral space. Sized to fit the disc space height in a manner similar to a natural intervertebral disc, such as any of discs D**1**-D**4**, the implantable device **100** provides support and stabilization to the vertebrae.

**[0028]** FIGS. **3** and **4** show the implantable device **100** in greater detail. FIG. **3** shows a perspective view of the implantable device **100**, while FIG. **4** shows a partially exploded view of the implantable device **100**. Referring now to both FIGS. **3** and **4**, the implantable device includes an implant member **102**, a face plate **104**, and anchor members **106**. The implant member **102** may include an upper surface **108**, a lower surface **110**, side surfaces, **112***a-b,* a rear surface **114** and a front surface **116**. The upper and lower surfaces **108**, **110** may be configured to interface with the load bearing endplates of the upper and lower vertebrae **14**, **16**, while the side, rear, and front surfaces **112***a-b,* **114**, **116** extend between the upper and lower surfaces **108**, **110**. A hollow center **118** may allow placement of bone growth materials, such as allograft to promote bonding and fusion of the implantable device **100** to the adjacent vertebrae.

**[0029]** In the embodiment shown, the upper and lower surfaces **108**, **110** include bone engaging features **120** configured to reduce slipping or movement of the implant member **102** relative to the vertebrae **14**, **16**. In the exemplary embodiment shown, the bone engaging features **120** are angled teeth that permit introduction into the disc space, but also restrict removal. These may be any other known bone engaging features, including protrusions and keels, among others. Alternatively, the upper and lower surfaces **108**, **110** may be relatively smooth. The side surfaces **112***a-b* each include a recessed slot **122** (best seen in FIG. **4**) configured to cooperate with an insertion tool (described below) that selectively connects to the implant member **102**. Within the slot **122**, attachment features, such as connecting impressions **124** (FIG. **4**), are configured to provide a secure connection with the faceplate **104**.

**[0030]** The front surface **116** and/or the upper and lower surfaces **108**, **110** include anchor member apertures **126** that receive the anchor members **106** for attachment of the implant member **102** to the vertebral bodies **14**, **16**. In this exemplary embodiment, the anchor members **106** are bone anchor members. However, other anchor members are contemplated. The anchor members **106** extend through the anchor member apertures **126** in the front surface **116** and upper and lower surfaces **108**, **110** and out the hollow center **118** and into the bearing endplates of the vertebrae **14**, **16**, thereby securely locating the implant member **102** entirely within the disc space. In this exemplary embodiment, the implant member **102** includes three apertures **126**—two angled to allow anchor members **106** to attach to an upper vertebral endplate and one angled to allow an anchor member **106** to attach to a lower vertebral endplate. However, in other embodiments, other numbers and configurations of anchor members **106** may be used.

**[0031]** To reduce the chance of the anchor members **106** backing out of the vertebral bodies over time and causing the implant member **102** to become loose, the face plate **104** is configured to extend across at least a portion of the anchor member apertures **126** and physically block anchor member back-out. FIG. **5**, in addition to FIGS. **3** and **4**, shows the face plate **104** in detail. The exemplary face plate **104** shown in these figures includes a main body **128** and locking features that cooperate with the implant member **102** to secure the main body **128** in place over the anchor member apertures **126**. In the embodiment shown, the locking features are compliant locking tabs **130** that protrude from the main body **128** and engage the implant member **102**.

**[0032]** The main body **128** includes a front surface **132**, an interfacing surface **134**, respective top and bottom surfaces **136**, **138**, and first and second ends **140**, **142**. The interfacing surface **134** lies against the front surface **116** of the implant member **102** and inhibits the anchor members **106** from backing out by being physically located within the back-out path. In this exemplary embodiment, the main body **128** extends substantially the entire length of the front surface **116** in an arcing shape, from one side surface **112***a* to the other side surface **112***b*. Its height is less than the height of the front surface **116**, and it overlaps only a portion of each of the anchor member apertures **126**, as shown in FIG. **3**.

**[0033]** The locking tabs **130**, in this exemplary embodiment, extend as cantilevers from the first and second ends **140**, **142** of the main body **128**, generally in the same direction forming a U-shape. In other embodiments, the locking tabs **130** extend from the top and bottom surfaces **136**, **138** of the face plate **104**. Each locking tab **130** includes a body portion **144** and a locking protrusion **146** extending from the body portion **144**. The body portion **144** of each locking tab **130** is configured to fit within the corresponding recessed slots **122** formed in the side surfaces **112***a-b* of the implant member **102**, and the locking protrusions **146** are sized and configured to interface with the corresponding connecting impressions **124** in the recessed slots **122**. In the embodiment shown, the locking protrusions **146** are angled protrusions having a leading tapered surface **148** and a trailing locking surface **150**.

**[0034]** In the embodiment shown, the faceplate **104** is configured to attach to the exterior sides **112***a-b* of the implant member **102**. Thus, the faceplate **104** may be sized to span the width of the implant member **102**, and may have an outer width Wt. In other embodiments, the faceplate may be configured to attach to locations on the implant member **102** other than the exterior surfaces.

**[0035]** The faceplate **104** may be configured to snap onto the implant member **102**, allowing simple installation once the anchor members **106** are placed during a surgical procedure. As used herein, the terms "snap onto," and "snaps onto" are intended to mean attachment using features of the different components without the use of separate fasteners, such as screws or staples. To do this, in the embodiment shown, the locking tabs **130** may be configured to elastically deform when placing the faceplate **104** on the implant member **102**, and then snap into place, thereby securing the faceplate **104**

onto the implant member **102** and physically limiting back-out of the anchor members **106** from the implant member **102**. An example of this is provided further below.

**[0036]** When the implantable device **100** is a spacer as shown in FIG. **2**, it is capable of being entirely contained within the disc space. Accordingly, anchor member locking features that reduce the chance of anchor member back-out, such as the locking tabs **130**, also may be disposed entirely within the disc space. This reduces a chance of creating additional patient trauma that can occur if organs and tissue are able to easily contact the implantable device outside the disc space.

**[0037]** In the embodiment shown, the face plate **104** may be constructed in whole or in part of biocompatible materials of various types. Examples of face plate materials include, but are not limited to, non-reinforced polymers, carbon-reinforced polymer composites, PEEK and PEEK composites, shape-memory alloys, titanium, titanium alloys, cobalt chrome alloys, stainless steel, ceramics and combinations thereof. If the face plate **104** is made from radiolucent material, radiographic markers can be located on the face plate **104** to provide the ability to monitor and determine radiographically or fluoroscopically the location of the face plate in the spinal disc space. Resorbable materials also may be used. Examples of resorbable materials that may be used include, but are not limited to, polylactide, polyglycolide, tyrosine-derived polycarbonate, polyanhydride, polyorthoester, polyphosphazene, calcium phosphate, hydroxyapatite, bioactive glass, and combinations thereof.

**[0038]** FIG. **6** shows an end of an insertion tool **152** for implanting the implant member **102**. The insertion tool **152** includes a body portion **154** and two arms **156** configured to interface with the recessed slots **122** on the implant member side surfaces **112***a-b*. A locking protrusion **158** on each arm **156** is shaped and sized to cooperate with the connecting impressions **124** in the recessed slots **122**. Accordingly, the insertion tool **152** and the faceplate **104** may be designed to cooperate with the same features on the implant member **102**. The overall width W**2** of the insertion tool **152** may be equal to or greater than the overall width WI of the face plate **104**. This may ensure that the faceplate **104** will fit properly within the disc space after the implant member **102** is introduced and placed in a patient with the insertion tool **152**.

**[0039]** In alternative embodiments, instead of the locking protrusions **146**, **158** being formed on the insertion tool **152** and/or on the faceplate **104**, the locking protrusions are formed on the implant member **102** and the insertion tool **152** and/or faceplate **104** has connecting features, such as connecting impressions. Additionally, in some exemplary embodiments, the connecting impressions **124** are apertures, hooks or other protruding or recessed features. Further, in some exemplary embodiments, the insertion tool **152** and/or faceplate **104** connects to locations on the implant member **102** other than at the side surfaces **112***a-b*. For example, in some exemplary embodiments, the locking tabs **130** extend into bores formed in the surface of the implant member **102** adjacent the anchor member apertures **126**. Other types and locations of attachments are contemplated.

**[0040]** In addition, although disclosed as being on the front surface **116** where the front surface is an anterior surface, it should be understood that the faceplate **104** may be disposed to cover any surface having an anchor member aperture **126** in the implantable device **102** to inhibit anchor member back-out. For example, some implant members **102** may be implanted posteriorly and may include anchor member apertures **126** on the rear side **114** or alternatively, on the lateral sides **112***a-b*. In these embodiments the face plate **104** may be disposed to cooperate with the apertures on those sides and inhibit anchor member back-out from those apertures.

**[0041]** FIG. **7** shows another exemplary embodiment of an implantable device, referenced herein by the numeral **200**. The implantable device **200** may include an implant member **202**, a faceplate **204**, and anchor members **206**. The implant member **202**, the faceplate **204**, and the anchor members **206** may include any or all of the features of the other embodiments described herein, and to reduce repetition, many of these features will not re-discussed with respect to the implantable device **200**.

**[0042]** Like the implantable member **102**, the implantable member **202** includes side surfaces **208**a-b, a rear surface **210**, and a front surface **212**. Anchor member apertures **214** are shown formed in the front surface **212** and allow attachment to the bearing endplates of the vertebrae **14**, **16** in FIG. **2**. In this embodiment however, the side surfaces **208***a-b* and the front surface **212** include a recess formed therein (shown with faceplate **204** located therein) sized to receive the faceplate **204** so that the faceplate **204** sits flush with one of or all of the side surfaces **208***a-b* and the front surface **212**. As with the other embodiments, the faceplate **204** overlaps the anchor member apertures **214** and inhibits anchor member back-out.

**[0043]** One exemplary embodiment of the faceplate **204** is shown in FIG. **8**. In this exemplary embodiment, the faceplate **204** includes a main body **216** and locking tabs **218** that extend from the main body **216**. In this embodiment, the main body height is substantially the same as the locking tab height. Locking protrusions **220** (only one is shown) extend inwardly from the locking tabs **218**, generally facing each other. In this exemplary embodiment, the locking protrusions **220** are cylindrical projections configured to fit into cylindrical connecting impressions on the implant member **202**. Again, as described above, the faceplate **204** is configured to snap onto the implant member **202** and inhibit anchor member back-out.

**[0044]** FIG. **9** shows another exemplary embodiment of an implantable device, referenced herein by the numeral **300**. The implantable device **300** may include an implant member **302**, a faceplate **304**, and anchor members (not shown). The implant member **302**, the faceplate **304**, and the anchor members may include any or all of the features of the other embodiments described herein, and to reduce repetition, many of these features will not re-discussed with respect to the implantable device **300**.

**[0045]** As can be seen in FIG. **9**, the implant member **302** includes an upper surface **308**, a lower surface **309**, side surfaces, **310***a-b*, and a front surface **312**. The side surfaces **310***a-b* each include a recessed slot **314** configured to cooperate with the above-described insertion tool **152** that selectively connects to the implant member **302**. Within the slot **314**, connecting impressions **316** are configured to provide a secure connection with the insertion tool. The front surface **312** includes anchor member apertures (not shown) that receive the anchor members for attachment of the implant member **302** to the vertebral bodies **14**, **16**.

**[0046]** The face plate **304** is shown in FIGS. **10** and **11** and includes a main body **320**, locking tabs **322**, and securing tabs **324**. The main body **320** includes a front surface **326**, an interfacing surface **328**, and respective top and bottom surfaces **330**, **332**. In the exemplary embodiment shown, the

main body **320** includes viewing ports **334** that here are formed of slots extending across the main body **320**. These viewing ports **334** allow an operating physician to view the previously inserted anchor members through the faceplate **304**. The interfacing surface **328** lies against the front surface **312** of the implant member **302** and deters the anchor members from backing out by physically blocking them. The face plate **304** connects to the implant member **302** using, in this exemplary embodiment, the securing tabs **324** and locking tabs **322**.

**[0047]** The securing tabs **324**, in this exemplary embodiment, extend from sides **336** of the main body **320** and are configured to interface with and extend into the recessed slots **314** on the implant member **302**. These securing tabs **324** act as guides to help orient and place the face plate **304** during assembly.

**[0048]** The locking tabs **322**, in this exemplary embodiment, extend from the top and bottom surfaces **330**, **332** of the main body **320** and are formed off-centerline, as best seen in FIG. **11**. Each locking tab **322** includes a body portion **338** and a locking protrusion **340** extending from the body portion **338**. The body portion **338** of each locking tab **322** is configured to fit within corresponding mating grooves **342** (best seen in FIG. **9**) formed in the upper and lower surfaces **308**, **309** of the implant member **302** and the locking protrusions **340** are sized and configured to interface with corresponding connecting impressions (not shown) in the mating grooves **342**. The locking tabs **322**, like those described with respect to other embodiments herein, may be configured to elastically deform when placing the face plate **304** on the implant member **302**, and then snap into place, thereby securing the face plate **304** onto the implant member **302** and physically limiting back-out of the anchor members from the implant member **302**.

**[0049]** Yet another exemplary embodiment of an implantable device is shown in FIGS. **12-14**, referenced by the numeral **400**. The implantable device **400** may include an implant member **402**, a faceplate **404**, and anchor members (not shown), each of which may include any or all of the features of the other embodiments described herein. To reduce repetition, many of these features will not be re-discussed with respect to the implantable device **400**.

**[0050]** As can be seen in FIGS. **12-14**, the implant member includes an upper surface **408**, a lower surface **410**, side surfaces **412***a-b,* and a front surface **414**. The side surfaces **412***a-b* each include a recessed slot **416** configured to cooperate with the above-described insertion tool **152** that selectively connects to the implant member **402**. Within the slot **416**, connecting impressions **424** are configured to provide a secure connection with the insertion tool and the faceplate **404**. The front surface **414** and the upper and lower surfaces **408**, **410** include anchor member apertures **420** that receive the anchor members for attachment of the implant member **402** to the vertebral bodies **14**, **16**.

**[0051]** The face plate **404** includes a main body **422** locking tabs **424**. The main body **422** includes an interfacing surface **426** and respective top and bottom surfaces **428**, **430**. In the exemplary embodiment shown in FIGS. **12-14**, projecting protuberances **432** extend from the interfacing surface **426** of the main body **422** in the same general direction as the locking tabs **424**. The projecting protuberances **432** are sized and shaped to at least partially penetrate into the anchor member apertures **420** and fit adjacent the anchor members. In some exemplary embodiments, the projecting protuberances **432** lie flat against or flush with the anchor members to substantially eliminate anchor member back-out. In these exemplary embodiments, the anchor members are held more tightly in place, and their movement is more limited than in the prior embodiments. In other exemplary embodiments, the projecting protuberances **432** do not lie flat against the anchor members, but still provide less room for back-out than the main body alone.

**[0052]** Referring now to FIG. **14**, the projecting protuberances **432** include an outer surface **434** oriented to face away from the implant member **402**, an inner surface **436** configured to face the anchor member, and a profile edge **438**. Because the anchor member apertures **420** in the implant member **402** are angled, the inner surface **436** also is angled to lie flush with and adjacent to the end of the anchor member. The angle of the inner surface **436** is dependent on the implant member design and angle of the anchor members and anchor member apertures **420**. In this exemplary embodiment, the anchor member apertures **420** extend through both the front surface **414** and the corresponding upper or lower surfaces **408**, **410**. Therefore, in the embodiment shown, the outer surface **434** is oriented outside the anchor member aperture **420** and lies flush with the corresponding upper or lower surface **408**, **410**. In other embodiments, where the anchor member aperture **420** is disposed only through the side surface **412**, the front surface **414**, or the rear surface **415**, the projecting protuberances **432** extend into and may be fully encompassed by the anchor member aperture **420**.

**[0053]** For ease of explanation, the faceplate **404** is shown with only a single projecting protuberance **432**. However, in other embodiments, the main body **422** includes a projecting protuberance **432** that corresponds with each anchor member aperture **420** in the implant member **402**. Accordingly, the main body **422** with the projecting protuberances **432** deters the anchor members from backing out by physically blocking them. As in other embodiments shown herein, the face plate **404** connects to the implant member **402** using, in this exemplary embodiment, the locking tabs **424**.

**[0054]** The locking tabs **424**, like those described with respect to other embodiments herein, may be configured to elastically deform when placing the face plate **404** on the implant member **402**, and then snap into place, thereby securing the face plate **404** onto the implant member **402** and physically limiting back-out of the anchor members from the implant member **402**.

**[0055]** A method of implantation is described below with reference to the first embodiment of the implantable device **100** disclosed herein. However, the method of implantation is intended to be equally applicable to all the disclosed embodiments.

**[0056]** The spacers may be implanted between the vertebrae **14**, **16** using any common approach, including an anterior approach, a posterior approach, a posterior transforaminal approach, a far lateral approach, a direct lateral approach, among others. According to at least one of these approaches, an incision, such as a midline incision, may be made in the patient's back and some or all of the affected disc and surrounding tissue may be removed via the foramina. The endplate surface of the vertebra **14** may be milled, rasped, or otherwise resected to match the profile of the upper surface **108** of the implant member **102**, to normalize stress distributions on the endplate surface of the vertebra **14**, and/or to provide initial fixation prior to bone ingrowth. The preparation of the endplate of vertebra **14** may result in a flattened

surface or in surface contours such as pockets, grooves, or other contours that may match the bone engaging features **120** on the upper surface **108**. The endplate of the vertebra **16** may be similarly prepared to engage the lower surface **110** of the implant member **102** to the extent allowed by the exiting nerve root and the dorsal root ganglia. In some procedures, the natural facet joints of vertebrae **14**, **16** may be trimmed or removed to provide access to the disc space.

**[0057]** The implant member **102** then may be attached to the insertion tool **152** and introduced into the intervertebral disc space between the upper and lower vertebrae **14**, **16**. Once properly positioned, the insertion tool **152** may be removed from the implant member **102** and anchor members **106** may be driven through the anchor member apertures **126** into the vertebral endplates. Alternatively, the anchor members **106** may be driven into the anchor member apertures **126** before the insertion tool **152** is removed. Once the anchor members **106** are driven into the bone, the anchor member apertures **126** may be covered with the faceplate **104** to prevent anchor member back-out.

**[0058]** The faceplate **104** may be introduced to the implant member **102** so that the locking tabs **130** align with the recessed slots **122**. While advancing the faceplate **104**, the tapered surfaces **148** of the locking protrusions **146** contact the implant member **102** and are elastically forced apart. Further advancement slides the locking protrusions **146** along the recessed slot **122** until the locking protrusions **146** reach the connecting impressions **124**. Once there, the faceplate **104** snaps onto the implant member **102** because the locking tabs **130** deform toward their original positions as the locking protrusions **146** at least partially snap into the connecting impressions **124**. The locking surface **150** on the locking protrusion **146** engages against the connecting impressions **124** and resists detaching the faceplate **104** from the implant member **102**. The main body **128** of the faceplate **102** is now oriented to overlap at least a part of the anchor member apertures **126**, and the surgical process may be completed in a manner known in the art.

**[0059]** Over time, due to micromotion of the vertebrae and the implant member **102**, the anchor members **106** may loosen slightly. However, the anchor members **106** may be unable to back-out because they come into contact with the main body **128** of the faceplate **104**. Thus, anchor member back-out is inhibited by the faceplate **104**.

**[0060]** In some embodiments, after the faceplate **104** snaps onto the implant member **102**, additional locking features, such as a screw fastener, may be used to further attach the faceplate **104** to the implant member **102**.

**[0061]** In some embodiments, the implant member or individual components of the implantable member are constructed of solid sections of bone, other tissues, or resorbable materials. Tissue materials include, but are not limited to, synthetic or natural autograft, allograft or xenograft, and may be resorbable or non-resorbable in nature. Examples of other tissue materials include, but are not limited to, hard tissues, connective tissues, demineralized bone matrix and combinations thereof. Examples of resorbable materials that may be used include, but are not limited to, polylactide, polyglycolide, tyrosine-derived polycarbonate, polyanhydride, polyorthoester, polyphosphazene, calcium phosphate, hydroxyapatite, bioactive glass, and combinations thereof. The implantable device may be solid, porous, spongy, perforated, drilled, and/or open.

**[0062]** In some circumstances, it is advantageous to pack all or a portion of the hollow center of the implant member with a suitable osteogenetic material or therapeutic composition. Osteogenic materials include, without limitation, autograft, allograft, xenograft, demineralized bone, synthetic and natural bone graft substitutes, such as bioceramics and polymers, and osteoinductive factors. A separate carrier to hold materials within the device can also be used. These carriers can include collagen-based carriers, bioceramic materials, such as BIOGLASS®, hydroxyapatite and calcium phosphate compositions. The carrier material may be provided in the form of a sponge, a block, folded sheet, putty, paste, graft material or other suitable form. The osteogenetic compositions may include an effective amount of a bone morphogenetic protein, transforming growth factor β1, insulin-like growth factor 1, platelet-derived growth factor, fibroblast growth factor, LIM mineralization protein (LMP), and combinations thereof or other therapeutic or infection resistant agents, separately or held within a suitable carrier material.

**[0063]** It is understood that all spatial references, such as "top," "inner," "outer," "bottom," "left," "right," "anterior," "posterior," "superior," "inferior," "medial," "lateral," "upper," "lower," "front," and "rear" are for illustrative purposes only and can be varied within the scope of the disclosure.

**[0064]** While embodiments of the invention have been illustrated and described in detail in the disclosure, the disclosure is to be considered as illustrative and not restrictive in character. All changes and modifications that come within the spirit of the invention are to be considered within the scope of the disclosure.

We claim:

**1**. An implantable medical device attachable to bone structure using an anchor member, comprising

an implant member including an anchor member aperture sized to receive the anchor member; and

a faceplate sized to overlap at least a portion of the anchor member aperture and inhibit back-out of the anchor member from the anchor member aperture, the faceplate being configured to snap onto the implantable member.

**2**. The device of claim **1**, wherein the implant member comprises a faceplate attachment feature and the faceplate includes a compliant locking tab that snaps onto the faceplate attachment feature.

**3**. The device of claim **2**, wherein the faceplate attachment feature is a connecting impression in the implant member.

**4**. The device of claim **3**, wherein the implant member includes recesses formed therein and the connecting impressions are formed in the recesses.

**5**. The device of claim **3**, wherein the faceplate attachment features are configured to cooperate with an insertion tool for implantation of the implant member.

**6**. The device of claim **1**, wherein the faceplate includes a main body that overlaps the anchor member aperture and includes a compliant locking tab extending from the main body.

**7**. The device of claim **6**, wherein the compliant locking tab is a first and a second locking tab, wherein the main body and the first and second locking tabs form a U-shape, and wherein the locking tabs are configured to extend along opposing sides of the implantable member.

**8**. The device of claim **1**, wherein the implant member includes a recessed portion; and wherein the faceplate

includes a main body that overlaps the anchor member apertures, and wherein the main body fits within the recessed portion.

**9**. The device of claim **1**, wherein the faceplate comprises:

a main body; and

projecting protuberances extending from the main body toward the implant member, the projecting protuberances extending at least partially into the anchor member apertures.

**10**. The device of claim **9**, wherein the projecting protuberances have an inner surface configured to lie adjacent the anchor member.

**11**. The device of claim **10**, wherein the inner surface is angled relative to the main body.

**12**. The device of claim **1**, wherein the faceplate comprises:

a main body;

locking tabs extending from the main body, the locking tabs being configured to secure the faceplate onto the implant member; and

securing tabs extending from the main body, the securing tabs being configured to guide and orient the faceplate onto the implant member.

**13**. The device of claim **12**, wherein the main body comprises viewing ports extending through the main body and located to allow visual viewing of the anchor member aperture.

**14**. A faceplate for at least partially covering a plurality of anchor member apertures in an implantable member, comprising:

a main body sized to at least partially overlap the plurality of anchor member apertures of the implantable member and configured to inhibit anchor member back-out from the plurality of anchor member apertures;

a locking tab associated with the main body, the locking tab being formed to at least partially elastically deform to engage the implantable member and secure the main body in place.

**15**. The faceplate of claim **14**, including a projecting protuberance extending from the main body configured to at least partially enter one of the plurality of anchor member bores.

**16**. The faceplate of claim **14**, including a guide tab extending from the main body for engaging the implantable member.

**17**. The faceplate of claim **14**, including a viewing port situated so that the anchor member bores are visible through the viewing port.

**18**. The faceplate of claim **14**, wherein the locking tabs comprise body portions and locking protrusions, the locking protrusions extending from the body portions.

**19**. The faceplate of claim **18**, wherein the locking protrusions have one of:

a cylindrical shape; and

a leading tapering surface and a trailing locking surface.

**20**. The faceplate of claim **14**, wherein the locking tab is a first locking tab, the faceplate including a second locking tab, the first and second locking tabs extending generally the same direction, the first and second locking tabs having respectively a first and a second locking protrusion that extend generally toward each other.

**21**. The faceplate of claim **14**, wherein the main body arcs from a first end to a second end, and the locking tab extends respectively from the first and second ends.

**22**. The faceplate of claim **14**, wherein the locking tabs are formed of one of a polymer material and a resorbable material.

**23**. A method comprising:

introducing an implant member to a vertebral segment comprising an upper and a lower vertebra;

inserting anchor members through anchor member apertures in the implant member, the anchor members penetrating the upper and the lower vertebrae;

orienting the faceplate to at least partially overlap the anchor member apertures; and

advancing the faceplate until it snaps onto the implant member to inhibit anchor member back-out.

**24**. The method of claim **23**, wherein introducing includes placing the implant member between the upper and lower vertebrae with an insertion tool.

**25**. The method of claim **23**, wherein orienting the faceplate includes fitting projecting protuberances at least partially within the anchor member apertures.

**26**. The method of claim **23**, wherein orienting the faceplate includes fitting a main body of the faceplate into a recesses portion on the implant member.

**27**. The method of claim **23**, wherein orienting the faceplate includes fitting a guide tab on the faceplate into a recess formed along a side of the implant member.

* * * * *