US009020637B2

(12) **United States Patent**
Schnittman

(10) **Patent No.: US 9,020,637 B2**
(45) **Date of Patent: Apr. 28, 2015**

(54) **SIMULTANEOUS LOCALIZATION AND MAPPING FOR A MOBILE ROBOT**

(71) Applicant: **iRobot Corporation**, Bedford, MA (US)

(72) Inventor: **Mark Schnittman**, Somerville, MA (US)

(73) Assignee: **iRobot Corporation**, Bedford, MA (US)

(*) Notice: Subject to any disclaimer, the term of this patent is extended or adjusted under 35 U.S.C. 154(b) by 122 days.

(21) Appl. No.: **13/790,643**

(22) Filed: **Mar. 8, 2013**

(65) **Prior Publication Data**

US 2014/0129027 A1 May 8, 2014

Related U.S. Application Data

(60) Provisional application No. 61/721,886, filed on Nov. 2, 2012.

(51) **Int. Cl.**
G05D 1/00 (2006.01)
G05D 1/02 (2006.01)

(52) **U.S. Cl.**
CPC ***G05D 1/0219*** (2013.01); ***G05D 1/0242*** (2013.01); ***G05D 1/0274*** (2013.01); *G05D 1/0227* (2013.01); *G05D 1/0272* (2013.01); *G05D 2201/0203* (2013.01)

(58) **Field of Classification Search**
CPC .. G05D 1/0274; G05D 1/0227; G05D 1/0219
USPC 700/253; 701/23, 25–26, 28, 448; 382/106, 113, 154, 181, 285
See application file for complete search history.

(56) **References Cited**

U.S. PATENT DOCUMENTS

4,628,453	A	12/1986	Kamejima et al.
4,942,539	A	7/1990	McGee et al.
4,954,962	A	9/1990	Evans et al.
5,040,116	A	8/1991	Evans et al.
5,109,425	A	4/1992	Lawton
5,111,401	A	5/1992	Everett, Jr. et al.
5,144,685	A	9/1992	Nasar et al.

(Continued)

OTHER PUBLICATIONS

Stella E. Circirelli et al., "Position Estimation for a Mobile Robot Using Data Fusion Intelligent Control," IEEE, May 1995, pp. 565-570.

(Continued)

Primary Examiner — Dalena Tran
(74) *Attorney, Agent, or Firm* — Honigman Miller Schwartz and Cohn LLP

(57) **ABSTRACT**

A method of simultaneous localization and mapping includes initializing a robot pose and a particle model of a particle filter. The particle model includes particles, each having an associated map, robot pose, and weight. The method includes receiving sparse sensor data from a sensor system of the robot, synchronizing the received sensor data with a change in robot pose, accumulating the synchronized sensor data over time, and determining a robot localization quality. When the accumulated sensor data exceeds a threshold accumulation and the robot localization quality is greater than a threshold localization quality, the method includes updating particles with accumulated synchronized sensor data. The method includes determining a weight for each updated particle of the particle model and setting a robot pose belief to the robot pose of the particle having the highest weight when a mean weight of the particles is greater than a threshold particle weight.

47 Claims, 16 Drawing Sheets

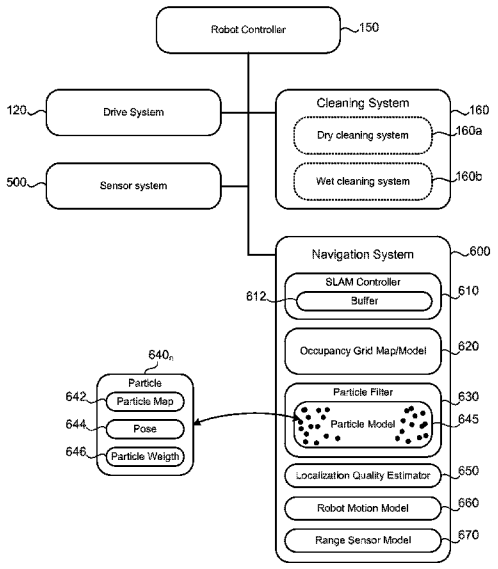

(56) **References Cited**

U.S. PATENT DOCUMENTS

5,155,775	A	10/1992	Brown	
5,170,352	A	12/1992	McTamaney et al.	
5,321,614	A	6/1994	Ashworth	
5,517,419	A	5/1996	Lanckton et al.	
5,525,882	A	6/1996	Asaka et al.	
5,525,883	A	6/1996	Avitzour	
5,581,629	A	12/1996	Hanna et al.	
5,677,836	A	10/1997	Bauer	
5,793,934	A	8/1998	Bauer	
5,957,984	A	9/1999	Rencken	
6,005,610	A	12/1999	Pingali	
6,009,359	A	12/1999	El-Hakim et al.	
6,243,657	B1	6/2001	Tuck et al.	
6,266,068	B1	7/2001	Kang et al.	
6,269,763	B1	8/2001	Woodland	
6,285,393	B1	9/2001	Shimoura et al.	
6,288,704	B1	9/2001	Flack et al.	
6,301,370	B1	10/2001	Steffens et al.	
6,389,329	B1	5/2002	Colens	
6,427,118	B1	7/2002	Suzuki	
6,459,955	B1	10/2002	Bartsch et al.	
6,496,754	B2	12/2002	Song et al.	
6,532,404	B2	3/2003	Colens	
6,552,729	B1	4/2003	Di Bernardo et al.	
6,594,844	B2	7/2003	Jones	
6,690,134	B1	2/2004	Jones et al.	
6,711,293	B1	3/2004	Lowe	
6,728,635	B2	4/2004	Hamada et al.	
6,771,932	B2	8/2004	Caminiti	
6,781,338	B2	8/2004	Jones et al.	
6,809,490	B2	10/2004	Jones et al.	
6,836,701	B2	12/2004	McKee	
6,898,518	B2	5/2005	Padmanabhan	
6,915,008	B2	7/2005	Barman et al.	
6,917,855	B2	7/2005	Gonzalez-Banos	
6,965,209	B2	11/2005	Jones et al.	
7,015,831	B2	3/2006	Karlsson et al.	
7,031,496	B2	4/2006	Shimano et al.	
7,082,350	B2	7/2006	Skoog	
7,135,992	B2	11/2006	Karlsson et al.	
7,145,478	B2 *	12/2006	Goncalves et al.	340/995.1
7,155,308	B2	12/2006	Jones	
7,162,338	B2	1/2007	Goncalves et al.	
7,173,391	B2	2/2007	Jones et al.	
7,177,737	B2	2/2007	Karlsson et al.	
7,196,487	B2	3/2007	Jones et al.	
7,272,467	B2	9/2007	Goncalves et al.	
7,388,343	B2	6/2008	Jones et al.	
7,389,156	B2	6/2008	Ziegler et al.	
7,448,113	B2	11/2008	Jones et al.	
7,571,511	B2	8/2009	Jones et al.	
7,636,982	B2	12/2009	Jones et al.	
7,689,321	B2	3/2010	Karlsson et al.	
7,761,954	B2	7/2010	Ziegler et al.	
7,774,158	B2 *	8/2010	Goncalves et al.	702/152
8,543,241	B2 *	9/2013	Hong et al.	700/259
2002/0016649	A1	2/2002	Jones	
2002/0120364	A1	8/2002	Colens	
2003/0007682	A1	1/2003	Koshizen et al.	
2003/0025472	A1	2/2003	Jones et al.	
2003/0030398	A1	2/2003	Jacobs et al.	
2003/0044048	A1	3/2003	Zhang et al.	
2004/0020000	A1	2/2004	Jones	
2004/0049877	A1	3/2004	Jones et al.	
2004/0167670	A1	8/2004	Goncalves et al.	
2004/0167688	A1	8/2004	Karlsson et al.	
2004/0167716	A1	8/2004	Goncalves et al.	
2004/0187457	A1	9/2004	Colens	
2004/0207355	A1	10/2004	Jones et al.	
2005/0067994	A1	3/2005	Jones et al.	
2005/0204717	A1	9/2005	Colens	
2005/0234679	A1	10/2005	Karlsson et al.	
2007/0090973	A1	4/2007	Karlsson et al.	
2007/0266508	A1	11/2007	Jones et al.	
2008/0140255	A1	6/2008	Ziegler et al.	
2008/0155768	A1	7/2008	Ziegler et al.	
2008/0307590	A1	12/2008	Jones et al.	
2010/0049365	A1	2/2010	Jones et al.	
2010/0257690	A1	10/2010	Jones et al.	
2010/0257691	A1	10/2010	Jones et al.	
2010/0263158	A1	10/2010	Jones et al.	
2014/0005933	A1 *	1/2014	Fong et al.	701/447
2014/0058610	A1 *	2/2014	Sofman et al.	701/23

OTHER PUBLICATIONS

G. Dissanayake et al., "A Computationally Efficient Solution to the Simultaneous Localization and Map Building (SLAM) Problem," Proceedings of the 2000 IEEE International Conference on Robotics & Automation (ICRA), Apr. 2000, pp. 1009-1014.

S.I. Roumeliotis et al., "Bayesian Estimation and Kalman Filtering: A Unified Framework for Mobile Robot Localization," Proceedings of the IEEE International Conference on Robotics and Automation (ICRA), San Francisco, CA, 2000, pp. 2985-2992.

Wolf J. Burgard et al., "Robust Vision-Based Localization for Mobile Robots Using an Image Retrieval System Based on Invariant Features," Proceeding of the 2002 IEEE International Conference on Robotics and Automation, Washington, D.C., May 2002, pp. 359-363.

S. Thrun, "Probabilistic Algorithms in Robotics," Technical Report, CMU-CS-00-126, Carnegie Mellon University, Pittsburgh, PA, Apr. 2000, pp. 1-18.

S. Thrun, "Robotic Mapping: A Survey," Technical Report, CMU-CS-02-111, Carnegie Mellon University, Pittsburgh, PA, Feb. 2000, pp. 1-29.

D. Fox et al., "Particle Filters for Mobile Robot Localization," New York, 2001, pp. 401-428.

D. Fox et al., "Markov Localization for Mobile Robots in Dynamic Environments," Journal of Artificial Intelligence Research, vol. 11, 1999, pp. 391-427.

David Lowe, "Object Recognition from Local Scale-Invariant Features," Proceedings of the International Conference on Computer Vision, Greece, Sep. 1999, pp. 1150-1157.

Olivier Faugeras et al., "Three Views: The Trifocal Geometry," The Geometry of Multiple Images, Cambridge, MA, The MIT Press, 2001, pp. 409-500.

R.E. Kalman, "A New Approach to Linear Filtering and Prediction Problems," Transaction of the ASME—Journal of Basic Engineering, vol. 82D, 1960, pp. 35-45.

D.G. Lowe, "Local Feature View Clustering for 3D Object Recognition," Proceedings of the IEEE Conference on Computer Vision and Pattern Recognition, Dec. 2001, pp. 682-688.

M. Montemerlo et al., "FastSLAM: A Factored Solution to the Simultaneous Localization and Mapping Problem," Proceedings of the American Association for Artificial Intelligence National Conference on Artificial Intelligence, Edmonton, Canada, 2002.

S. Se et al., "Local and Global Localization for Mobile Robots Using Visual Landmarks," Proceedings of the 2001 IEEE International Conference on Intelligent Robots and Systems, Hawaii, 2001, pp. 414-420.

S. Se et al., "Mobile Robot Localization and Mapping with Uncertainty Using Scale-Invariant Features," The International Journal of Robotics Research, vol. 21, No. 8, Aug. 2002, pp. 735-758.

S. Se et al., "Vision-Based Mobile Robot Localization and Mapping Using Scale-Invariant Features," Proceedings of IEEE International Conference on Robotics and Automation, Seoul, Korea, May 2001, pp. 2051-2058.

S. Thrun et al., "A Probabilistic Approach to Concurrent Mapping and Localization for Mobile Robots," Machine Learning, vol. 31, No. 1-3, pp. 29-53.

Gasper et al., "Vision-Based Navigation and Environmental Representation with an Omnidirectional Camera," 2000, IEEE, pp. 890-898.

Castellanos et al., "Multisensor Fusion for Simultaneous Localization and Map Building," 2001, IEEE, pp. 908-914.

Adam et al., "Fusion of Fixation and Odemetry for Vehicle Navigation," 1999, IEEE, pp. 593-603.

* cited by examiner

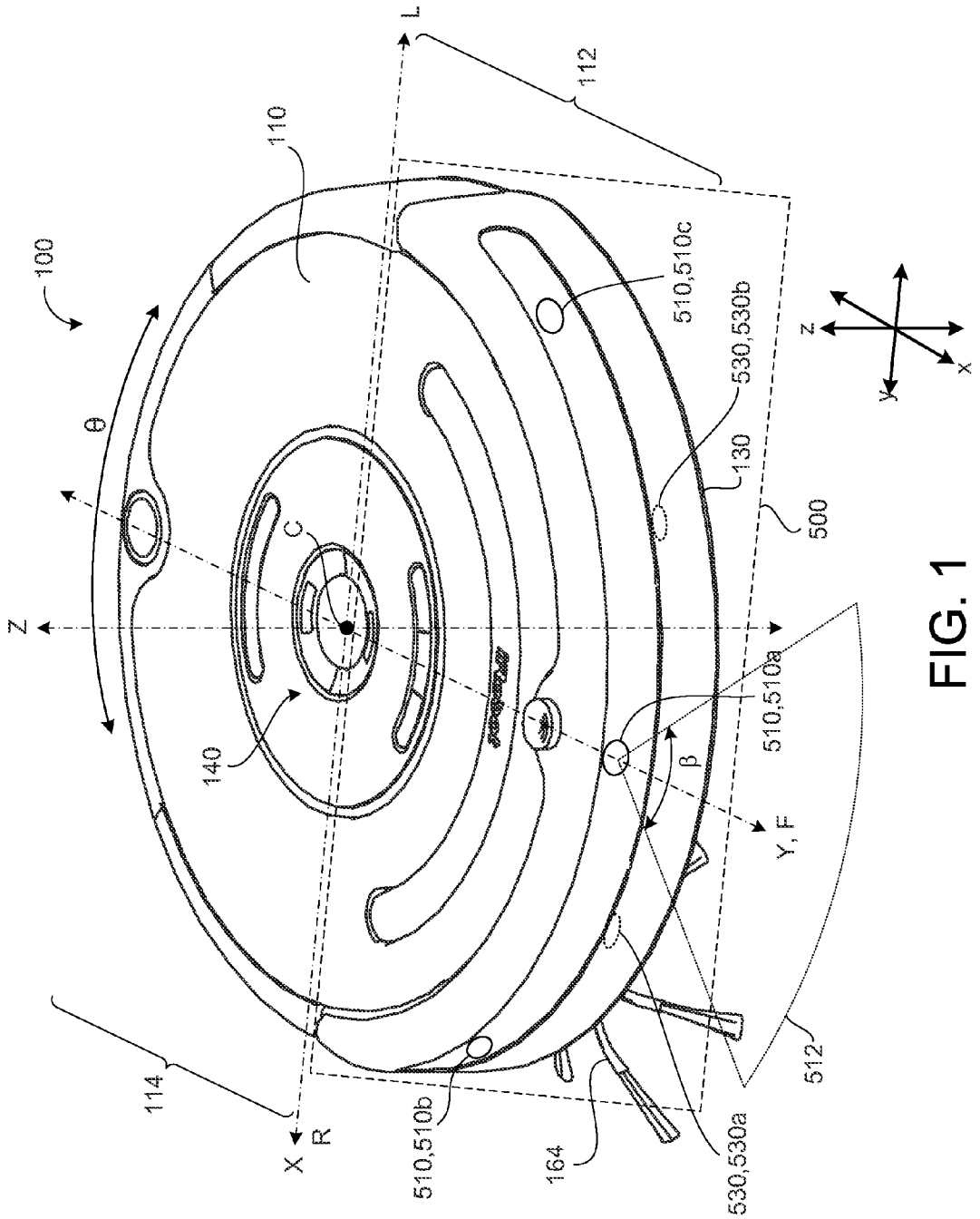
100
110
112
L
θ
Z
C
140
510,510c
530,530b
130
500
510,510a
β
Y, F
512
114
X
R
510,510b
164
530,530a
z
x
y

FIG. 1

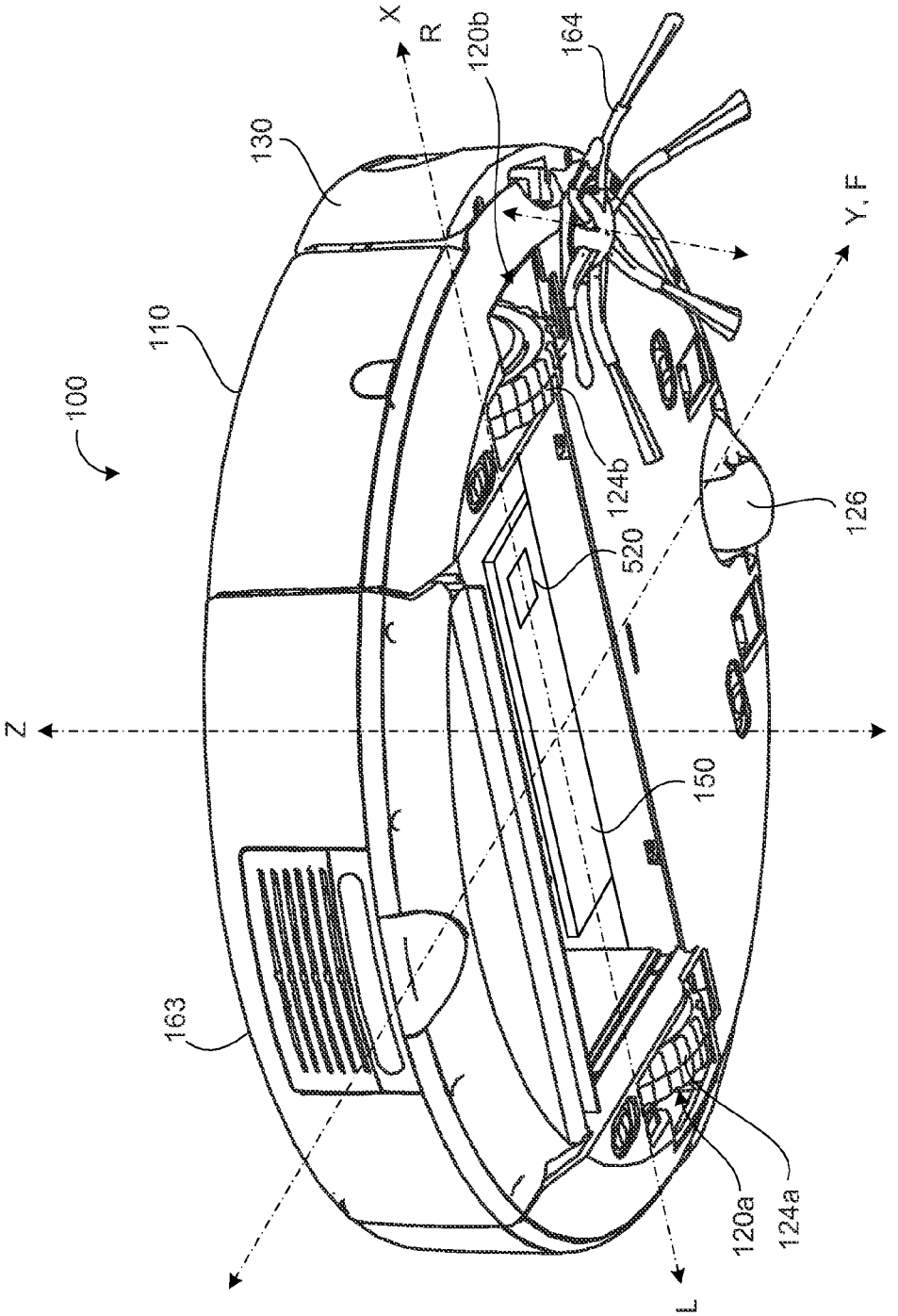

FIG. 2

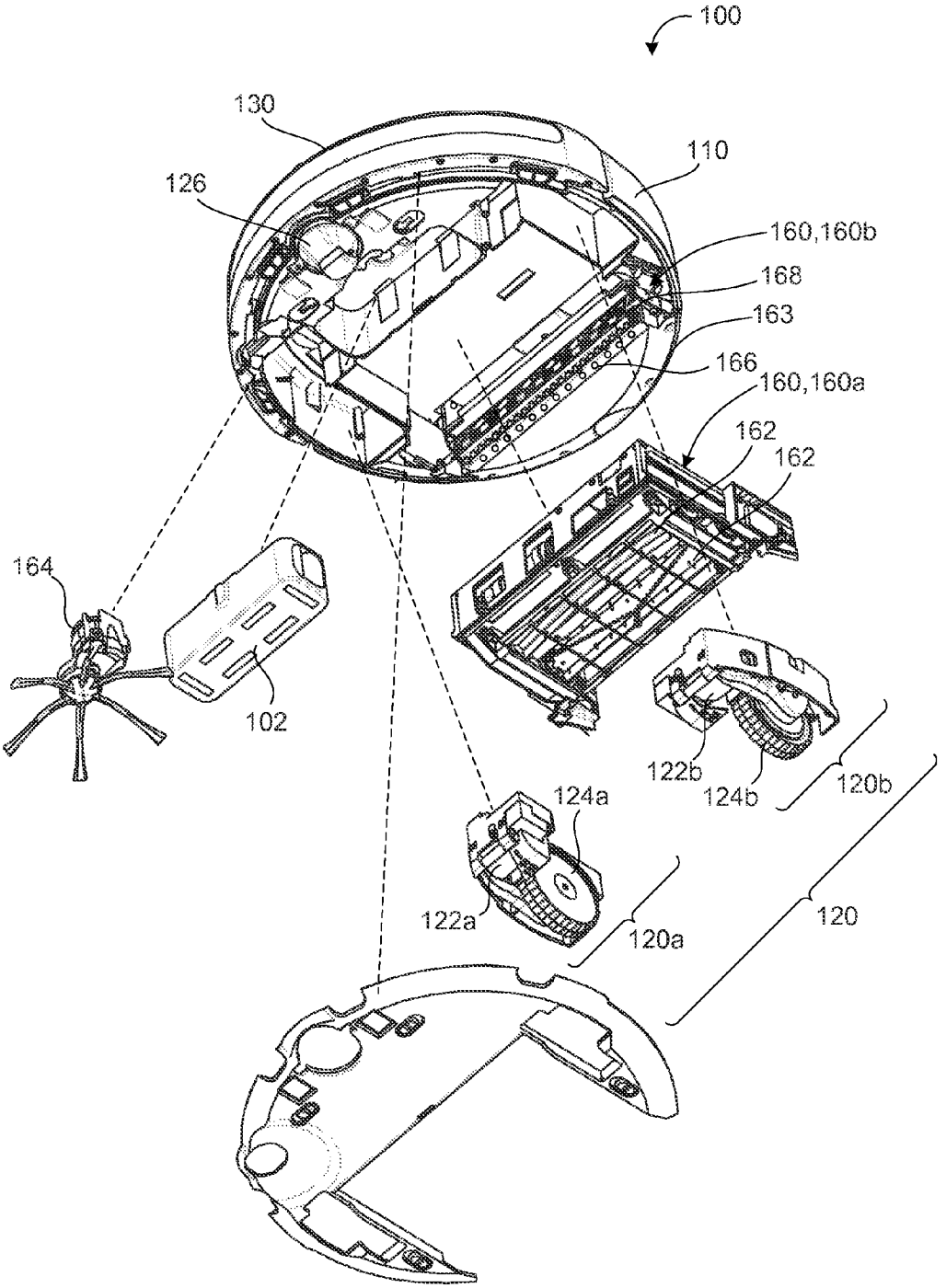
100
130
110
126
160,160b
168
163
166
160,160a
162
162
164
102
122b
124b
120b
124a
122a
120a
120

FIG. 3

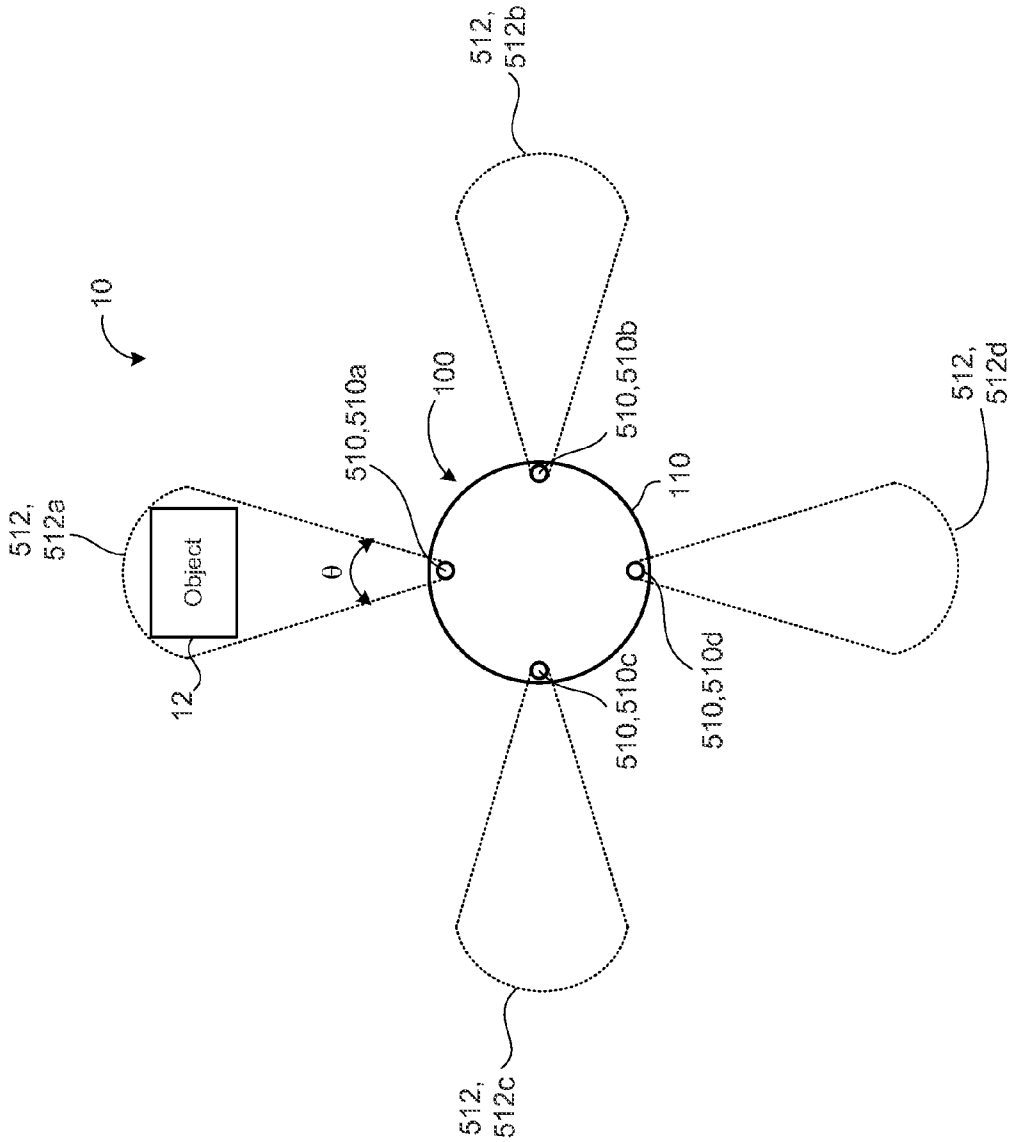
10
512,
512a
Object
12
θ
510,510a
100
512,
512b
510,510b
110
512,
512c
510,510c
510,510d
512,
512d

FIG. 4A

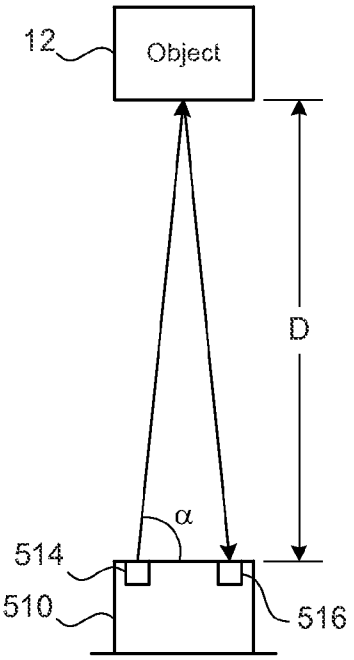

FIG. 4B

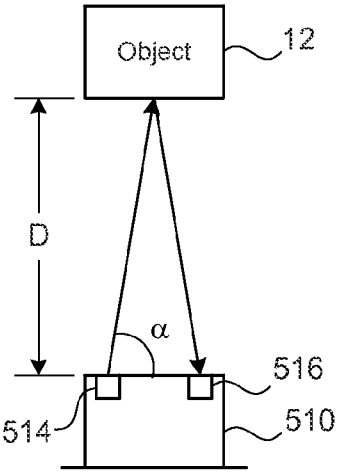

FIG. 4C

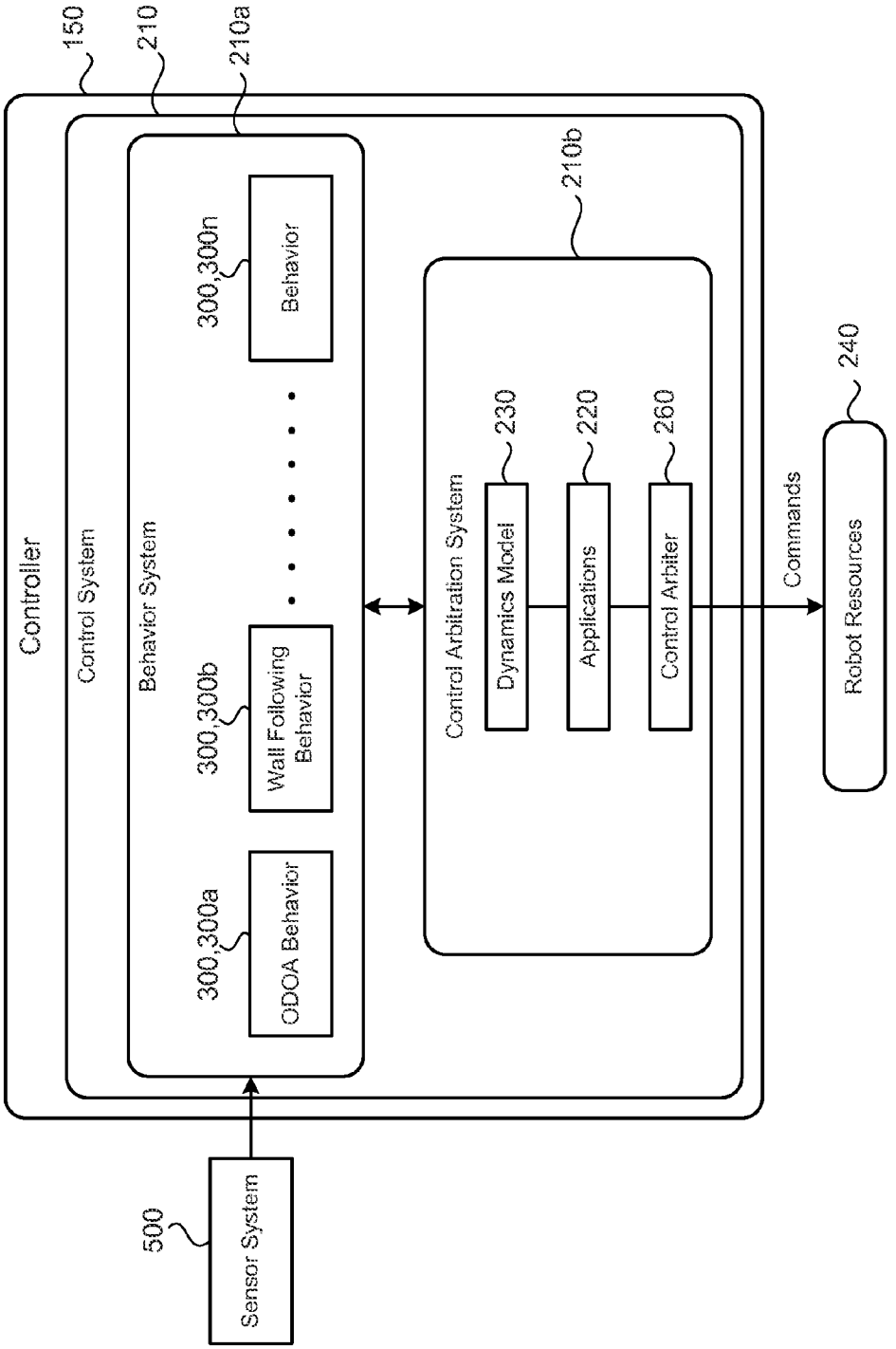
150
Controller
210
Control System
210a
Behavior System
300,300a
ODOA Behavior
300,300b
Wall Following Behavior
300,300n
Behavior
500
Sensor System
210b
Control Arbitration System
230
Dynamics Model
220
Applications
260
Control Arbiter
Commands
240
Robot Resources

FIG. 5

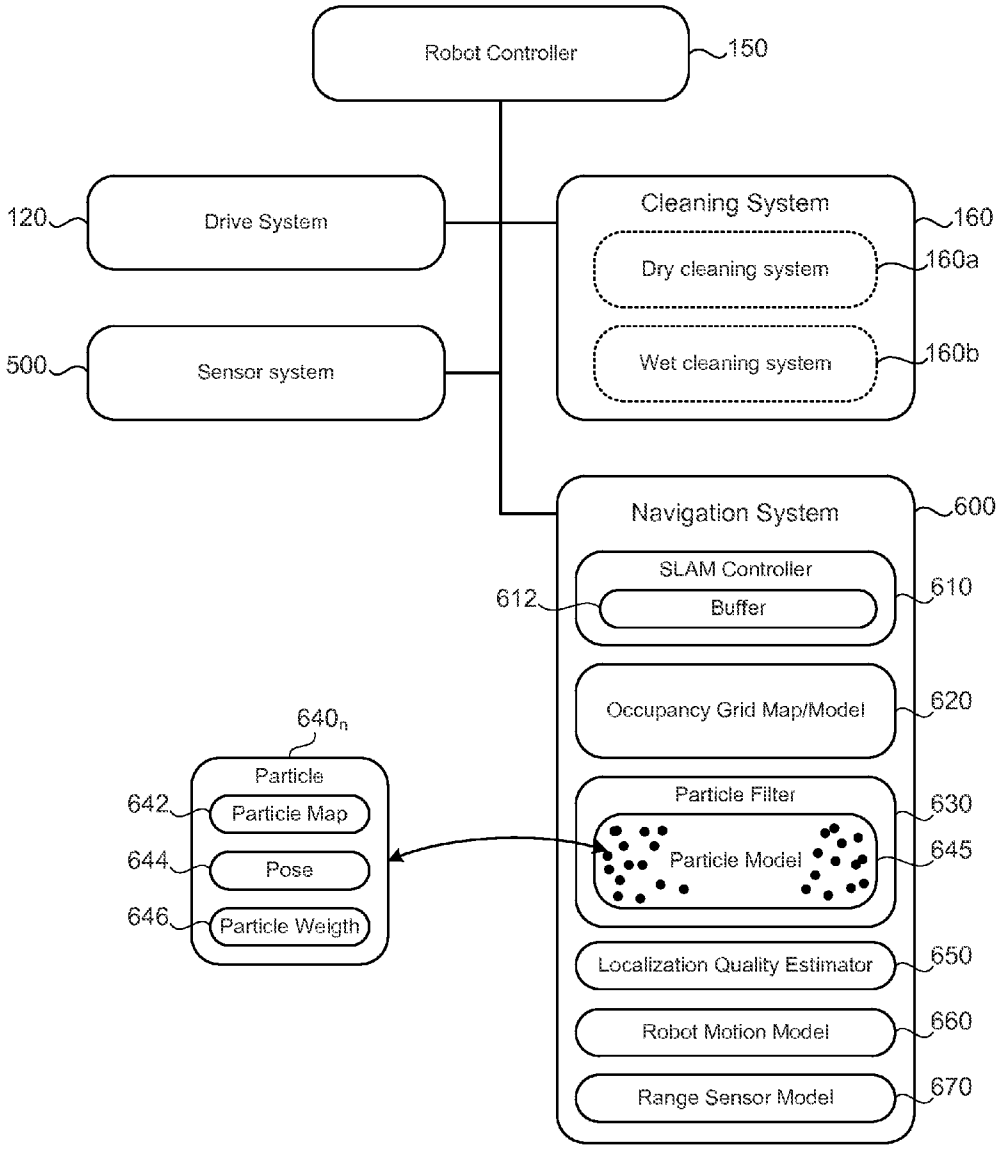
Robot Controller
150
120
Drive System
Cleaning System
160
Dry cleaning system
160a
500
Sensor system
Wet cleaning system
160b
Navigation System
600
SLAM Controller
612
Buffer
610
Occupancy Grid Map/Model
620
640n
Particle
642
Particle Map
644
Pose
646
Particle Weigth
Particle Filter
630
Particle Model
645
Localization Quality Estimator
650
Robot Motion Model
660
Range Sensor Model
670

FIG. 6

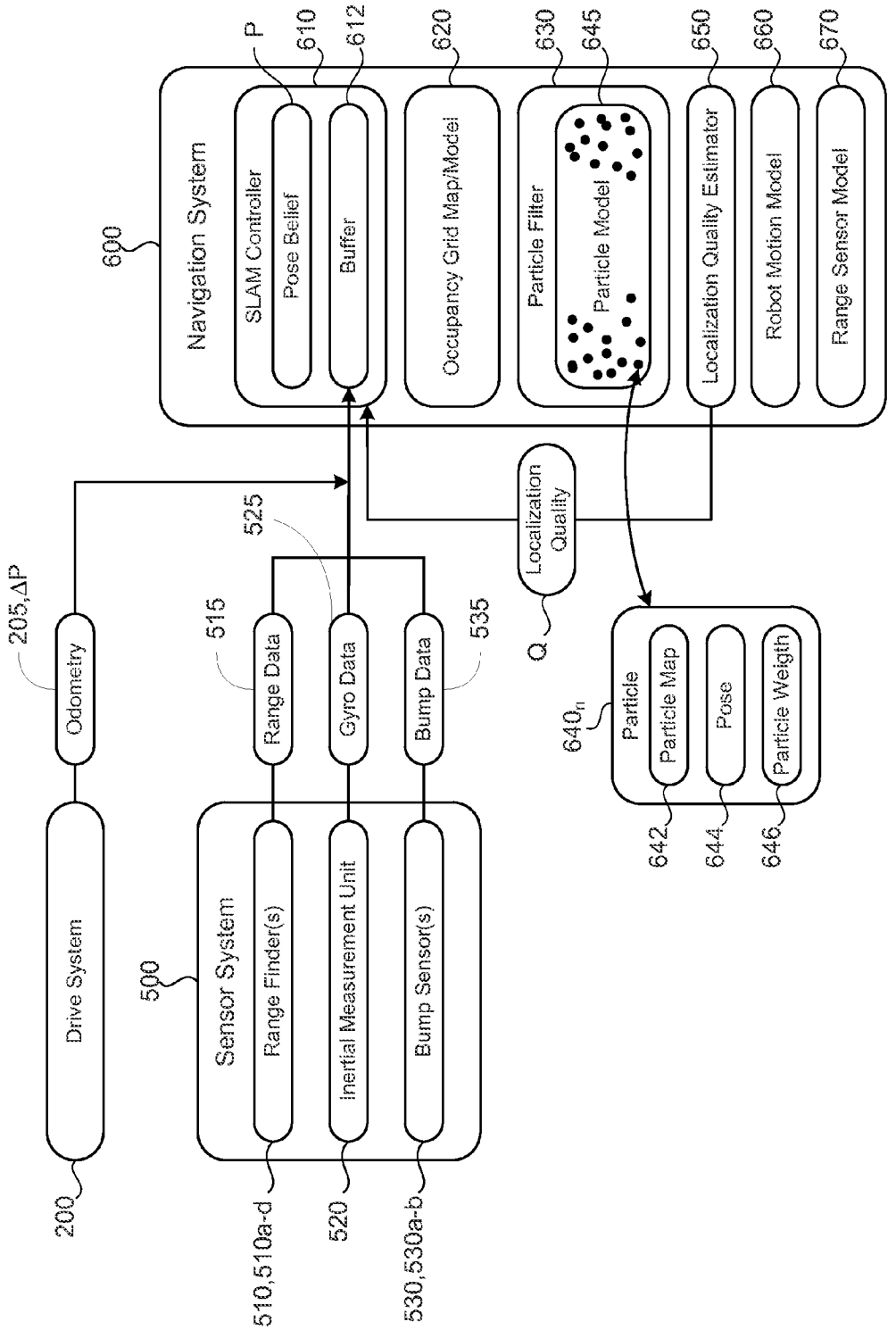
Navigation System
600
SLAM Controller
Pose Belief
P
610
Buffer
612
Occupancy Grid Map/Model
620
Particle Filter
630
Particle Model
645
Localization Quality Estimator
650
Robot Motion Model
660
Range Sensor Model
670
Localization Quality
Q
205,ΔP
Odometry
Drive System
200
525
515
Range Data
Gyro Data
Bump Data
535
Sensor System
500
Range Finder(s)
Inertial Measurement Unit
Bump Sensor(s)
510,510a-d
520
530,530a-b
640n
Particle
Particle Map
Pose
Particle Weigth
642
644
646

FIG. 7

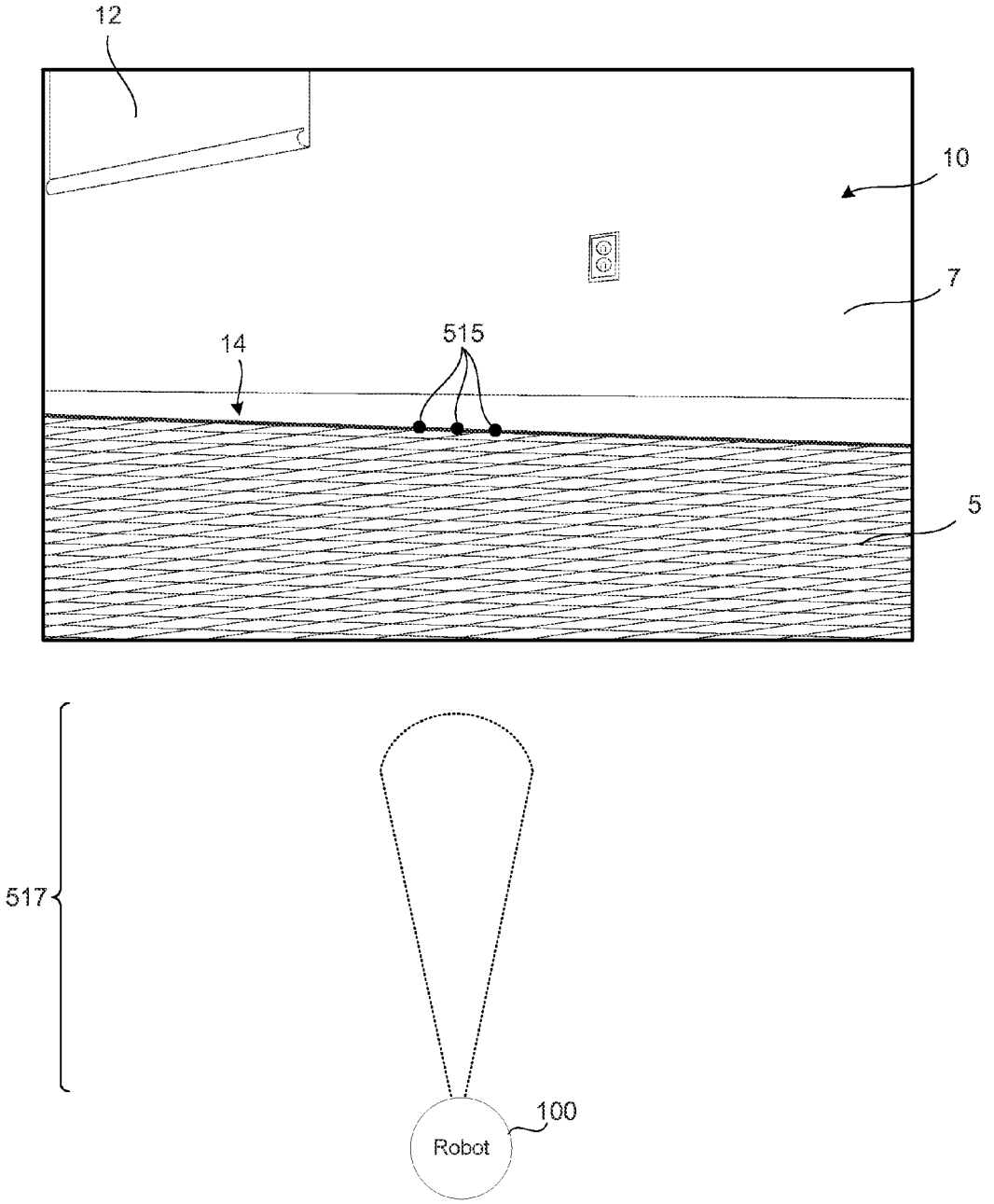

FIG. 8A

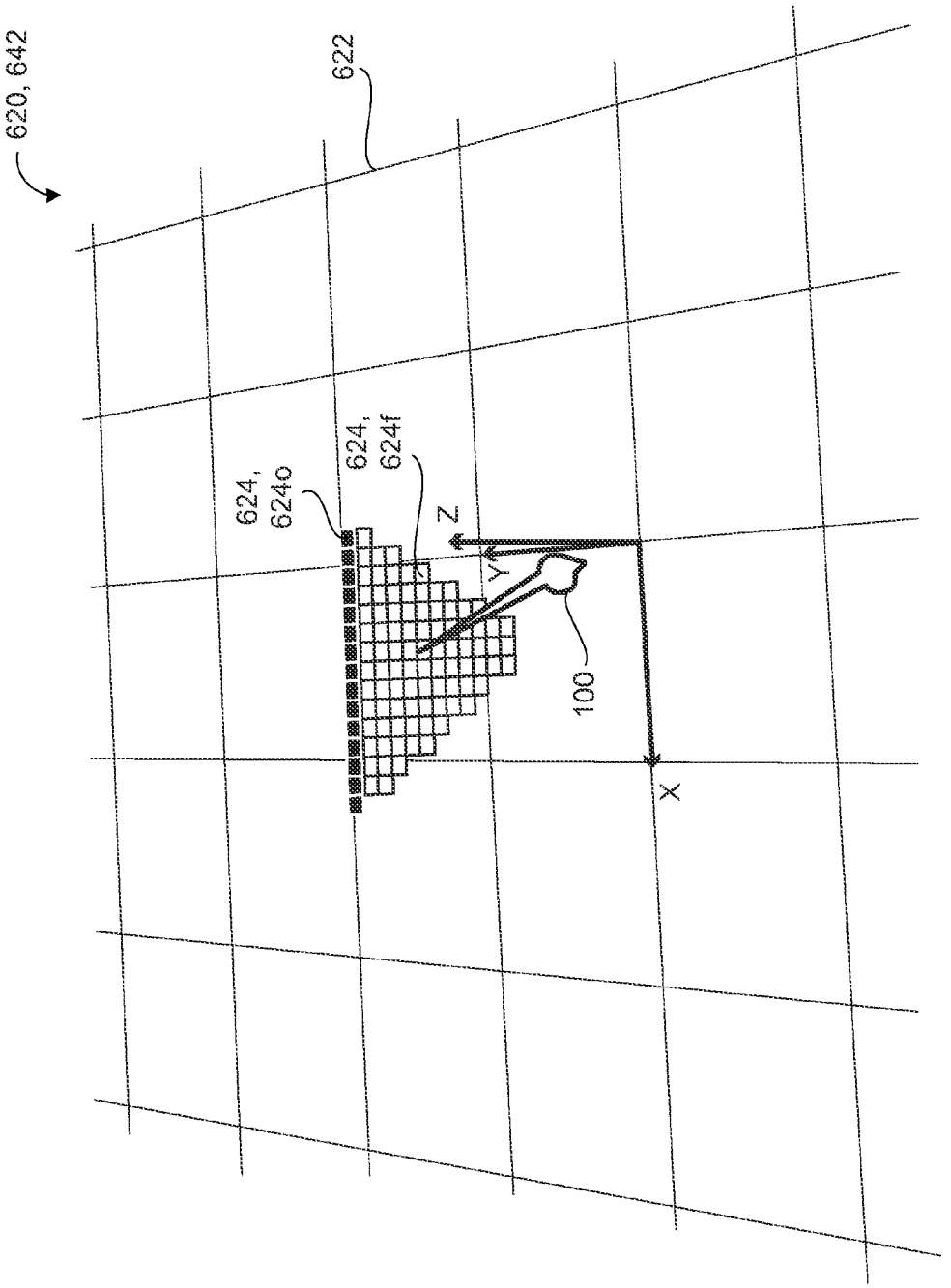

FIG. 8B

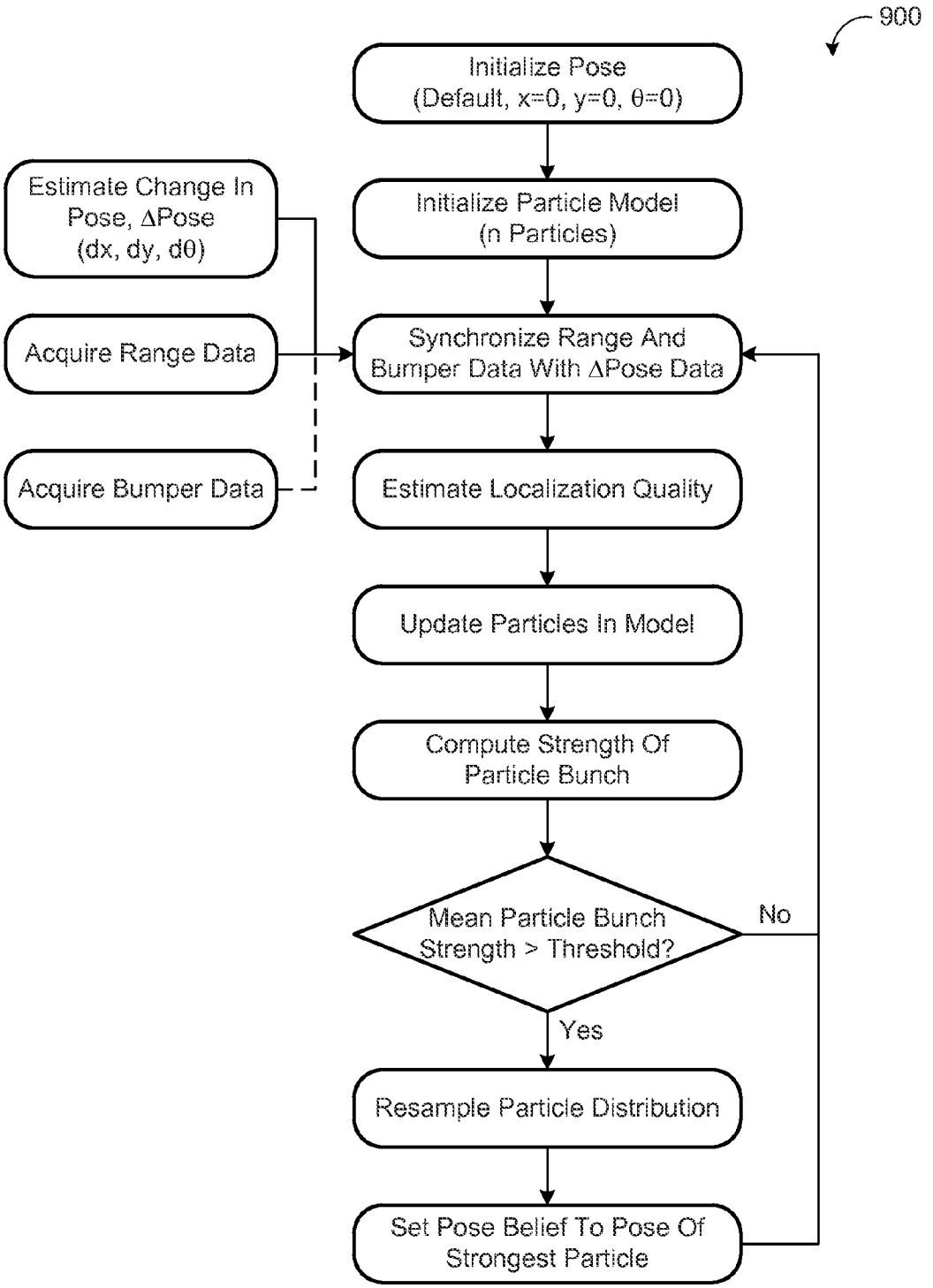
900
Initialize Pose
(Default, x=0, y=0, θ=0)
Initialize Particle Model
(n Particles)
Estimate Change In
Pose, ΔPose
(dx, dy, dθ)
Acquire Range Data
Acquire Bumper Data
Synchronize Range And
Bumper Data With ΔPose Data
Estimate Localization Quality
Update Particles In Model
Compute Strength Of
Particle Bunch
Mean Particle Bunch
Strength > Threshold?
No
Yes
Resample Particle Distribution
Set Pose Belief To Pose Of
Strongest Particle

FIG. 9

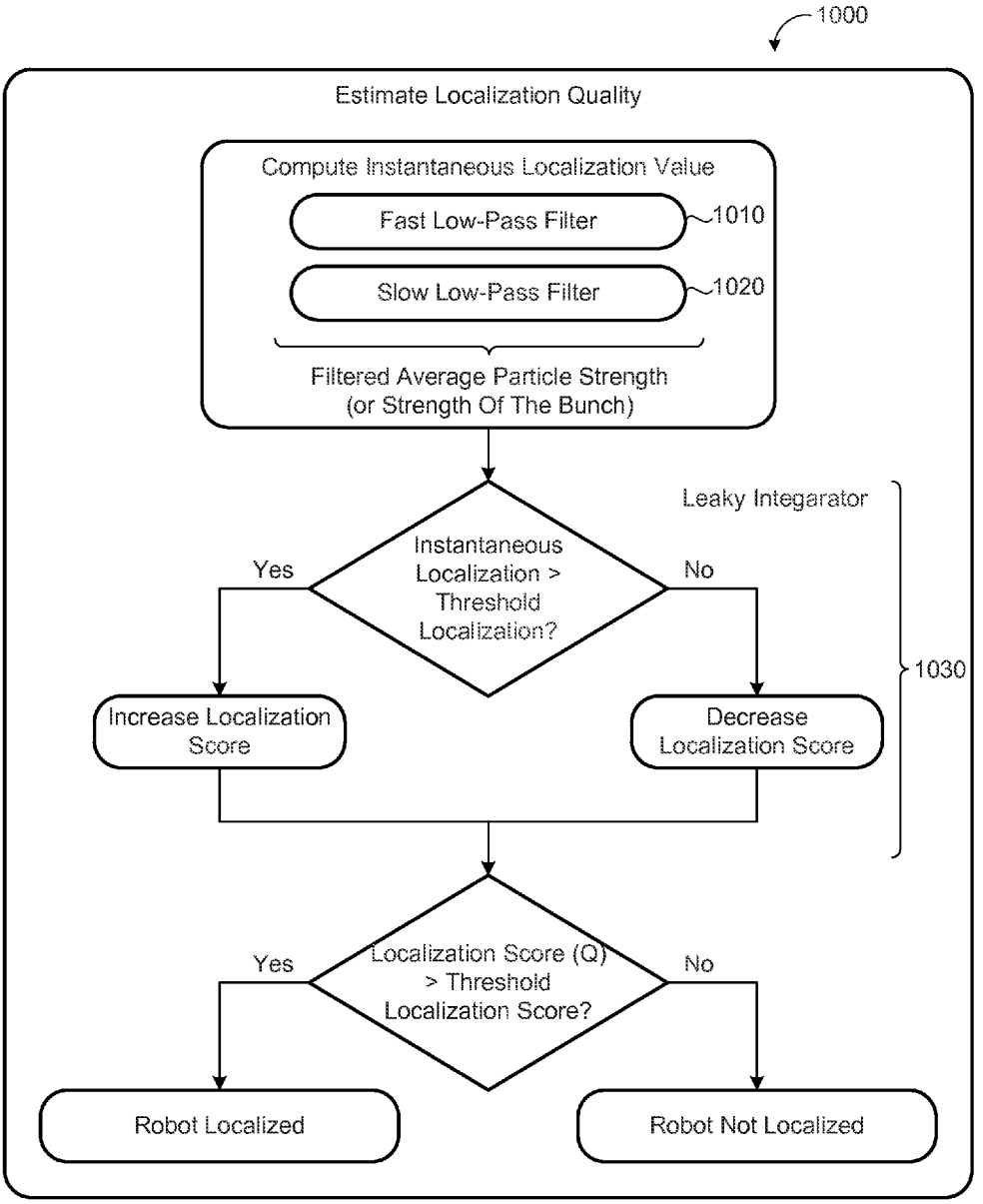
1000
Estimate Localization Quality
Compute Instantaneous Localization Value
Fast Low-Pass Filter
1010
Slow Low-Pass Filter
1020
Filtered Average Particle Strength
(or Strength Of The Bunch)
Leaky Integarator
Instantaneous Localization > Threshold Localization?
Yes
No
1030
Increase Localization Score
Decrease Localization Score
Localization Score (Q) > Threshold Localization Score?
Yes
No
Robot Localized
Robot Not Localized

FIG. 10A

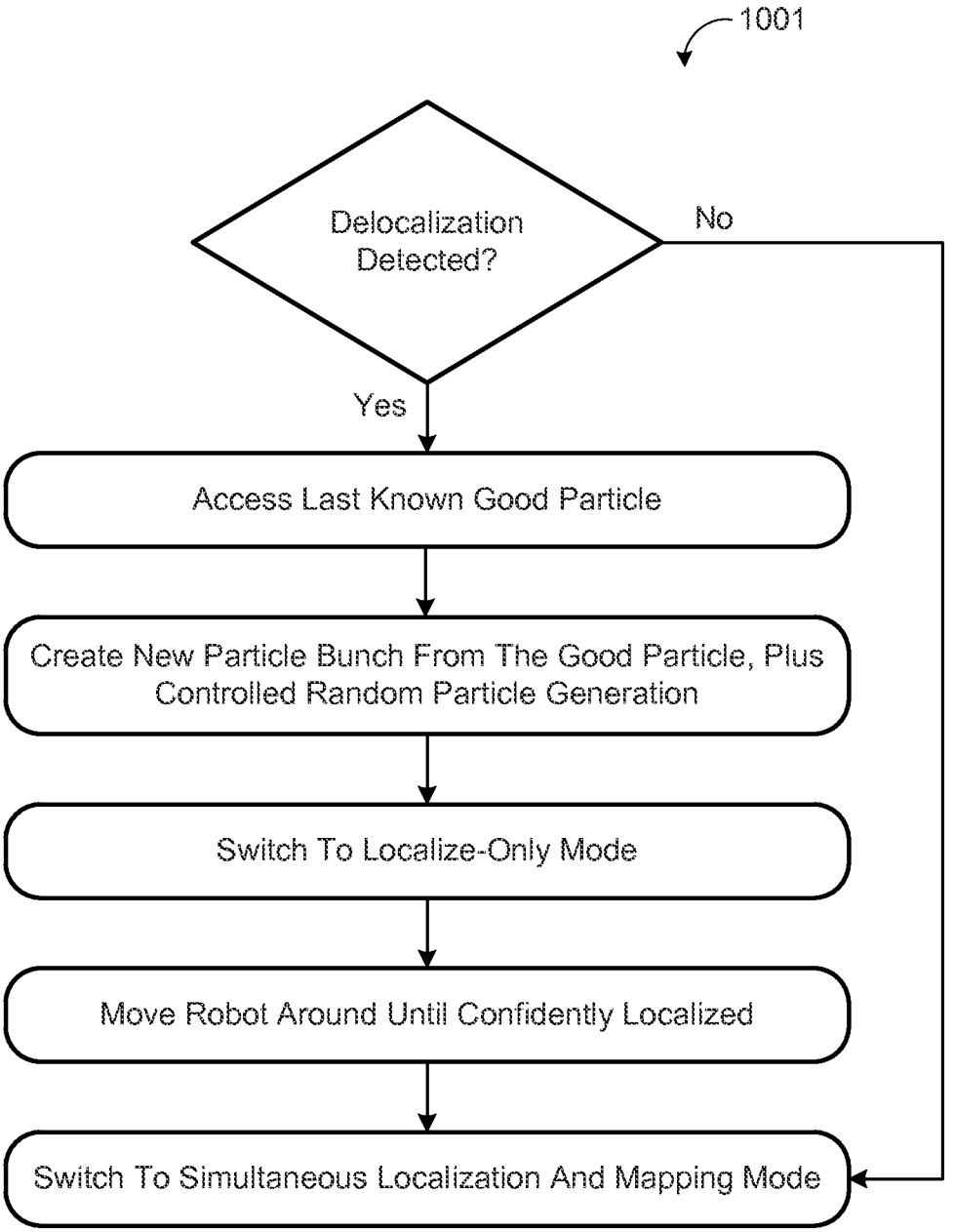
1001
Delocalization Detected?
No
Yes
Access Last Known Good Particle
Create New Particle Bunch From The Good Particle, Plus Controlled Random Particle Generation
Switch To Localize-Only Mode
Move Robot Around Until Confidently Localized
Switch To Simultaneous Localization And Mapping Mode

FIG. 10B

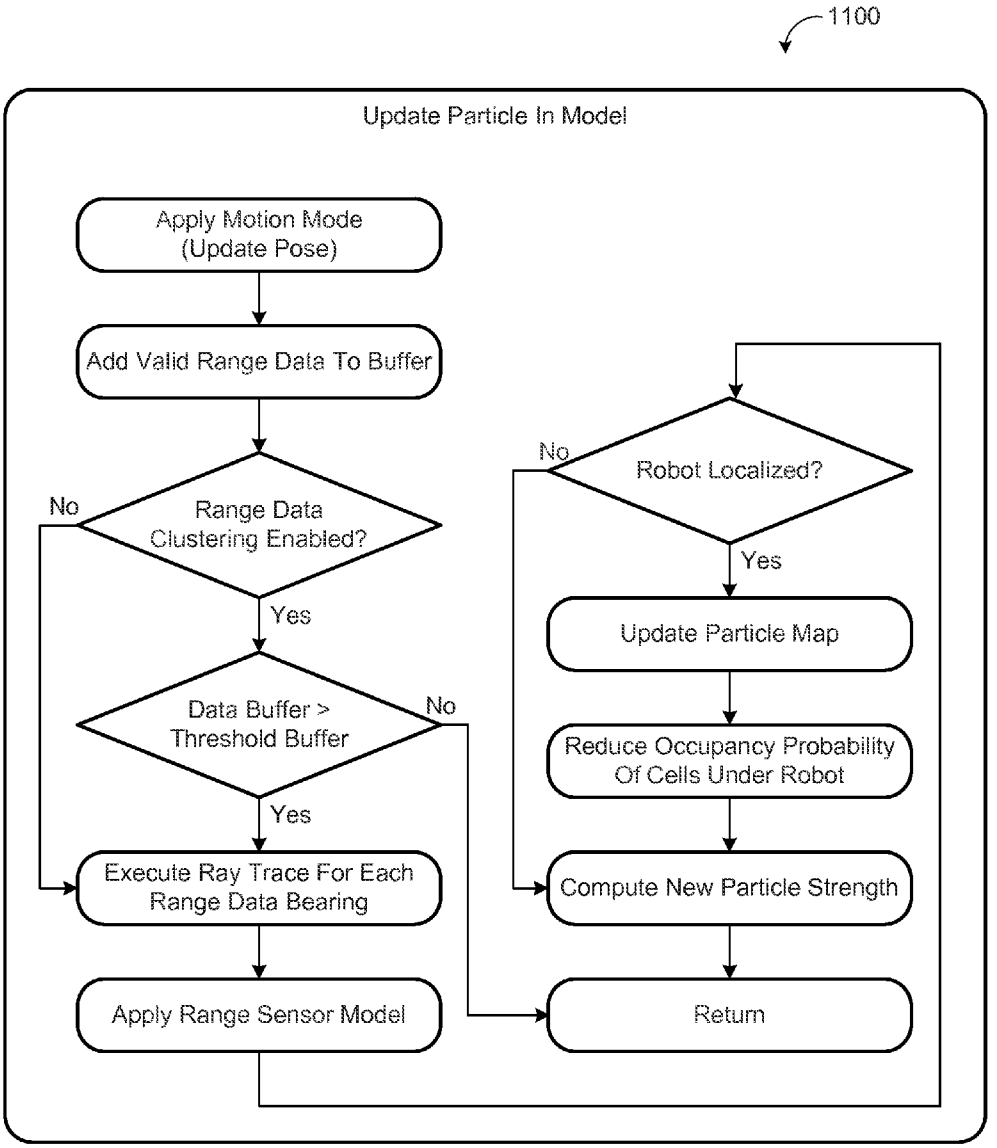
1100
Update Particle In Model
Apply Motion Mode (Update Pose)
Add Valid Range Data To Buffer
Range Data Clustering Enabled?
No
Yes
Data Buffer > Threshold Buffer
No
Yes
Execute Ray Trace For Each Range Data Bearing
Apply Range Sensor Model
Robot Localized?
No
Yes
Update Particle Map
Reduce Occupancy Probability Of Cells Under Robot
Compute New Particle Strength
Return

FIG. 11

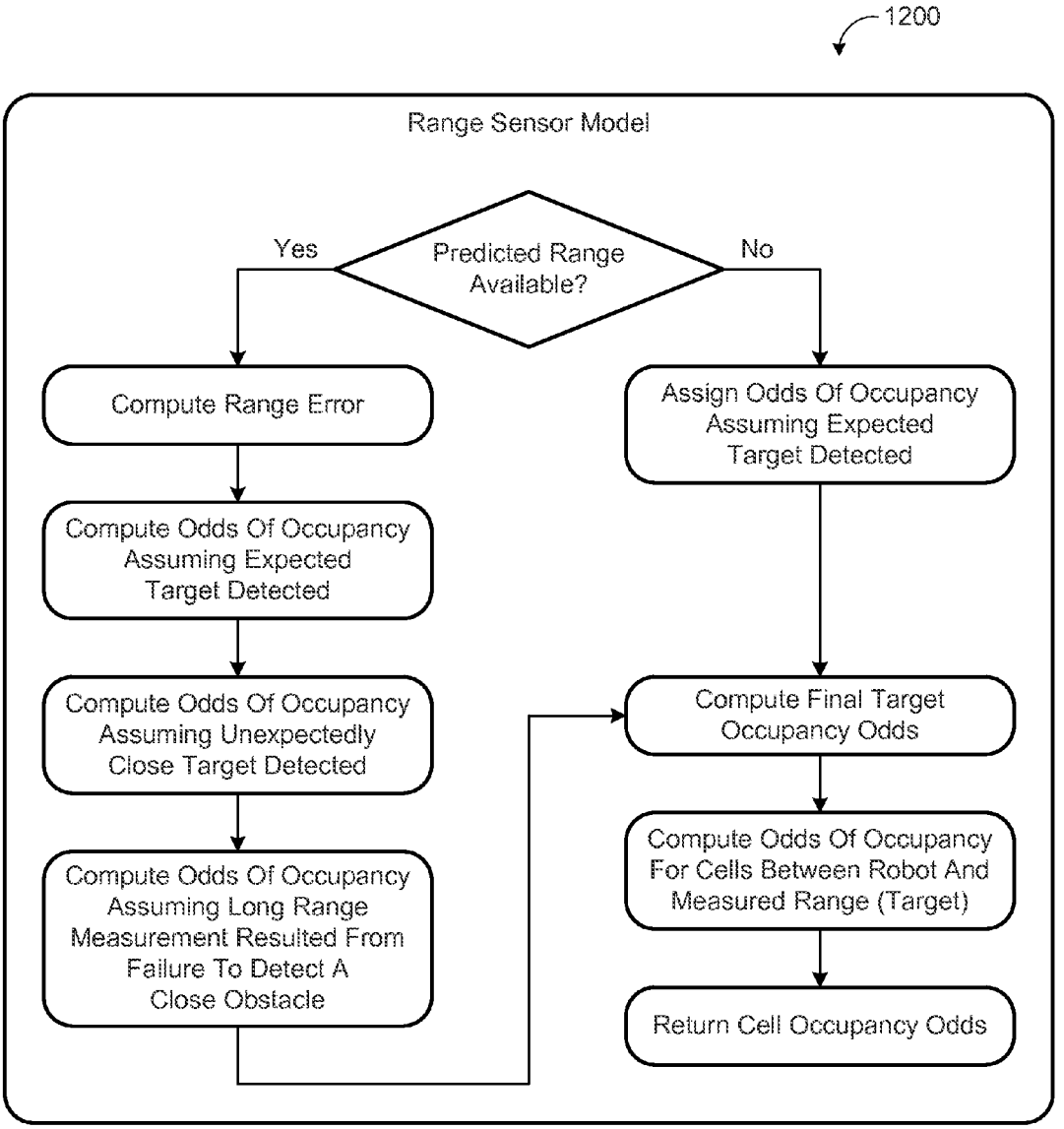
1200
Range Sensor Model
Predicted Range Available?
Yes
No
Compute Range Error
Compute Odds Of Occupancy Assuming Expected Target Detected
Compute Odds Of Occupancy Assuming Unexpectedly Close Target Detected
Compute Odds Of Occupancy Assuming Long Range Measurement Resulted From Failure To Detect A Close Obstacle
Assign Odds Of Occupancy Assuming Expected Target Detected
Compute Final Target Occupancy Odds
Compute Odds Of Occupancy For Cells Between Robot And Measured Range (Target)
Return Cell Occupancy Odds

FIG. 12

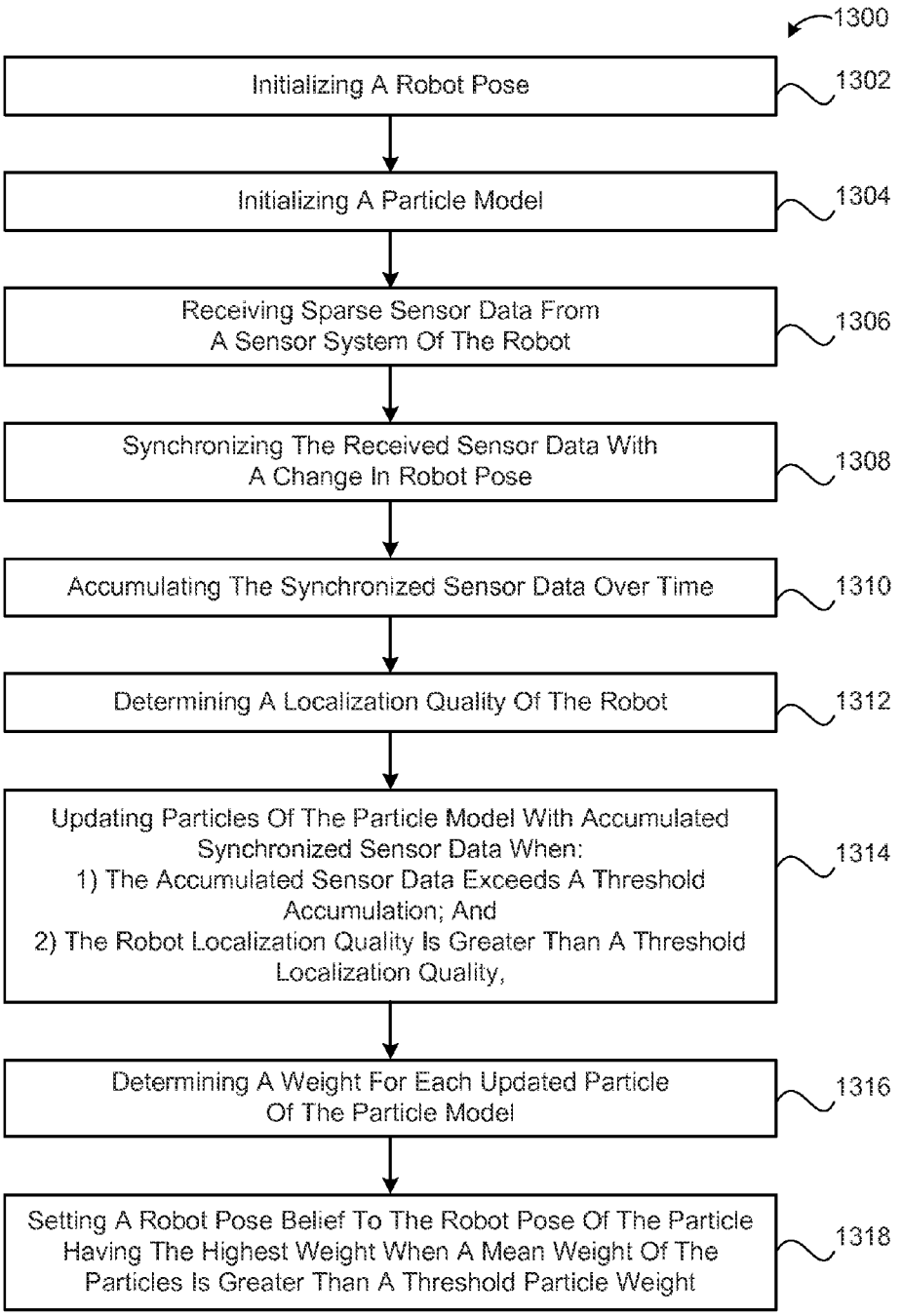
1300
Initializing A Robot Pose
1302
Initializing A Particle Model
1304
Receiving Sparse Sensor Data From A Sensor System Of The Robot
1306
Synchronizing The Received Sensor Data With A Change In Robot Pose
1308
Accumulating The Synchronized Sensor Data Over Time
1310
Determining A Localization Quality Of The Robot
1312
Updating Particles Of The Particle Model With Accumulated Synchronized Sensor Data When:
1) The Accumulated Sensor Data Exceeds A Threshold Accumulation; And
2) The Robot Localization Quality Is Greater Than A Threshold Localization Quality,
1314
Determining A Weight For Each Updated Particle Of The Particle Model
1316
Setting A Robot Pose Belief To The Robot Pose Of The Particle Having The Highest Weight When A Mean Weight Of The Particles Is Greater Than A Threshold Particle Weight
1318

FIG. 13

SIMULTANEOUS LOCALIZATION AND MAPPING FOR A MOBILE ROBOT

CROSS REFERENCE TO RELATED APPLICATIONS

This U.S. patent application claims priority under 35 U.S.C. §119(e) to U.S. Provisional Application 61/721,886, filed on Nov. 2, 2012, which is hereby incorporated by reference in its entirety.

TECHNICAL FIELD

This disclosure relates to simultaneous localization and mapping (SLAM) for mobile robots.

BACKGROUND

A robot is generally an electro-mechanical machine guided by a computer or electronic programming. Mobile robots have the capability to move around in their environment and are not fixed to one physical location. An example of a mobile robot that is in common use today is an automated guided vehicle or automatic guided vehicle (AGV). An AGV is generally a mobile robot that follows markers or wires in the floor, or uses a vision system or lasers for navigation. Mobile robots can be found in industry, military and security environments. They also appear as consumer products, for entertainment or to perform certain tasks like vacuum cleaning and home assistance.

SUMMARY

One aspect of the disclosure provides a method of simultaneous localization and mapping executed on a controller of an autonomous mobile robot. The method includes initializing a robot pose and initializing a particle model of a particle filter executing on the controller. The particle model includes particles, each having an associated map, robot pose, and weight. The method also includes receiving sparse sensor data from a sensor system of the robot, synchronizing the received sensor data with a change in robot pose, accumulating the synchronized sensor data over time in non-transitory memory, and determining a localization quality of the robot. When the accumulated sensor data exceeds a threshold accumulation and the robot localization quality is greater than a threshold localization quality, the method includes updating particles of the particle model with accumulated synchronized sensor data. The method includes determining a weight for each updated particle of the particle model and setting a robot pose belief to the robot pose of the particle having the highest weight when a mean weight of the particles is greater than a threshold particle weight.

A computer program product encoded on a non-transitory computer readable storage medium may include instructions that when executed by a data processing apparatus cause the data processing apparatus to perform the method of simultaneous localization and mapping described above.

Implementations of the disclosure may include one or more of the following features. In some implementations, the method includes sampling the particle model for a particle population and resampling the particle model for the particle population when the robot localization quality is greater than the threshold localization quality. The method may include replacing a portion of the particle population with randomly selected particles of the particle model when resampling fails to occur within a threshold sampling time period. Additionally or alternatively, the method may include replacing a portion of the particle population with particles selected from the particle model based on the accumulated synchronized sensor data when resampling fails to occur within a threshold sampling time period.

The method may include determining the change in robot pose using odometry received from a drive system of the robot and inertial measurements from an inertial measurement unit of the robot. In some examples, determining the robot localization quality includes computing an instantaneous localization, receiving the instantaneous localization through a fast low-pass filter, receiving the instantaneous localization through a slow low-pass filter, and receiving the instantaneous localization through a leaky integrator. The method may include comparing a ratio of results of the two low-pass filters integrated by the integrator. When a result of the integrator is above a threshold value, the method may include determining the robot as well localized (e.g., by assigning a localization quality accordingly).

The sensor data may include range data (e.g., from one or more infrared range finding sensors) and the synchronized sensor data include range measurement and bearing pairs. The bearings may be determined from received odometry.

In some implementations, the method includes updating each particle's pose, map, and weight. Updating the particle pose may include applying a robot motion model to the accumulated synchronized sensor data. The robot motion model models movement of the robot based on odometry and inertial measurements. Updating the particle map may include executing a ray trace of the accumulated synchronized sensor data and applying a range sensor model to the accumulated synchronized sensor data. Updating the particle weight may be based on a number of measured ranges of the accumulated synchronized sensor data matching predicted ranges.

Executing the ray trace may include, for each range measurement and bearing pair, receiving the bearing and an existing particle map, and computing a predicted range. The method may further include receiving a measured range, receiving the predicted range, and computing a probability of occupancy of an object in each cell of the particle map along the ray trace. In some examples, applying the range sensor model includes only updating particle map cells corresponding to the synchronized sensor data.

In some implementations, applying the range sensor model includes computing a range error as an absolute difference between the measured range and the predicted range and computing the occupancy probability within each cell of the particle map along the ray trace based on the range error. For each particle map cell along the ray trace, the method may include computing a first occupancy probability assuming detection of an expected object, computing a second occupancy probability assuming detection of an expectedly close object, computing a third occupancy probability assuming failure to detect of an expected close object within a threshold distance of the robot, and computing a weighted average of the first, second, and third occupancy probabilities.

Another aspect of the disclosure provides an autonomous mobile robot that includes a drive system configured to maneuver the robot over a floor surface and a sensor system having at least one infrared range finding sensor producing range data of a scene about the robot. The robot also includes a controller in communication with the drive system and the sensor system. The controller executes a simultaneous localization and mapping method that includes initializing a robot pose and initializing a particle model of a particle filter executing on the controller. The particle model includes particles, each having an associated map, robot pose, and weight.

The method also includes receiving sparse sensor data from a sensor system of the robot, synchronizing the received sensor data with a change in robot pose, accumulating the synchronized sensor data over time in non-transitory memory, and determining a localization quality of the robot. When the accumulated sensor data exceeds a threshold accumulation and the robot localization quality is greater than a threshold localization quality, the method includes updating particles of the particle model with accumulated synchronized sensor data. The method includes determining a weight for each updated particle of the particle model and setting a robot pose belief to the robot pose of the particle having the highest weight when a mean weight of the particles is greater than a threshold particle weight.

In some implementations, the method includes sampling the particle model for a particle population and resampling the particle model for the particle population when the robot localization quality is greater than the threshold localization quality. The method may include replacing a portion of the particle population with randomly selected particles of the particle model when resampling fails to occur within a threshold sampling time period. Additionally or alternatively, the method may include replacing a portion of the particle population with particles selected from the particle model based on the accumulated synchronized sensor data when resampling fails to occur within a threshold sampling time period.

The method may include determining the change in robot pose using odometry received from a drive system of the robot and inertial measurements from an inertial measurement unit of the robot. In some examples, determining the robot localization quality includes computing an instantaneous localization, receiving the instantaneous localization through a fast low-pass filter, receiving the instantaneous localization through a slow low-pass filter, and receiving the instantaneous localization through a leaky integrator. The method may include comparing a ratio of results of the two low-pass filters integrated by the integrator. When a result of the integrator is above a threshold value, the method may include determining the robot as well localized (e.g., by assigning a localization quality accordingly).

The sensor data may include range data (e.g., from one or more infrared range finding sensors) and the synchronized sensor data include range measurement and bearing pairs. The bearings may be determined from received odometry.

In some implementations, the method includes updating each particle's pose, map, and weight. Updating the particle pose may include applying a robot motion model to the accumulated synchronized sensor data. The robot motion model models movement of the robot based on odometry and inertial measurements. Updating the particle map may include executing a ray trace of the accumulated synchronized sensor data and applying a range sensor model to the accumulated synchronized sensor data. Updating the particle weight may be based on a number of measured ranges of the accumulated synchronized sensor data matching predicted ranges.

Executing the ray trace may include, for each range measurement and bearing pair, receiving the bearing and an existing particle map, and computing a predicted range. The method may further include receiving a measured range, receiving the predicted range, and computing a probability of occupancy of an object in each cell of the particle map along the ray trace. In some examples, applying the range sensor model includes only updating particle map cells corresponding to the synchronized sensor data.

In some implementations, applying the range sensor model includes computing a range error as an absolute difference between the measured range and the predicted range and computing the occupancy probability within each cell of the particle map along the ray trace based on the range error. For each particle map cell along the ray trace, the method may include computing a first occupancy probability assuming detection of an expected object, computing a second occupancy probability assuming detection of an expectedly close object, computing a third occupancy probability assuming failure to detect of an expected close object within a threshold distance of the robot, and computing a weighted average of the first, second, and third occupancy probabilities.

Another aspect of the disclosure provides a method executed on a controller of an autonomous mobile robot. The method includes determining a localization quality of the robot and when the localization quality is below a threshold quality, accessing a good particle from a particle model of a particle filter executing on the controller. The particle model has particles, each having an associated map, robot pose, and weight. The good particle has weight greater than a threshold weight. The method includes generating new particles based on the last known good particle and re-populating at least a portion of the particle model with the new particles.

In some implementations, accessing a good particle includes accessing a last known good particle. The method may include ceasing map building when the localization quality is below the threshold quality. Determining the robot localization quality may include computing an instantaneous localization, receiving the instantaneous localization through a fast low-pass filter, receiving the instantaneous localization through a slow low-pass filter, and receiving the instantaneous localization through a leaky integrator.

The method may include initializing a robot pose and initializing the particle model of the particle filter executing on the controller. The method may also include receiving sparse sensor data from a sensor system of the robot, synchronizing the received sensor data with a change in robot pose, accumulating the synchronized sensor data over time in non-transitory memory, and determining a localization quality of the robot. When the accumulated sensor data exceeds a threshold accumulation and the robot localization quality is greater than a threshold localization quality, the method may include updating particles of the particle model with accumulated synchronized sensor data. The method may include determining a weight for each updated particle of the particle model and setting a robot pose belief to the robot pose of the particle having the highest weight when a mean weight of the particles is greater than a threshold particle weight.

In some implementations, the method includes sampling the particle model for a particle population and resampling the particle model for the particle population when the robot localization quality is greater than the threshold localization quality. The method may include replacing a portion of the particle population with randomly selected particles of the particle model when resampling fails to occur within a threshold sampling time period. Additionally or alternatively, the method may include replacing a portion of the particle population with particles selected from the particle model based on the accumulated synchronized sensor data when resampling fails to occur within a threshold sampling time period.

The sensor data may include range data (e.g., from one or more infrared range finding sensors) and the synchronized sensor data include range measurement and bearing pairs. The bearings may be determined from received odometry.

In some implementations, the method includes updating each particle's pose, map, and weight. Updating the particle pose may include applying a robot motion model to the accumulated synchronized sensor data. The robot motion model models movement of the robot based on odometry and inertial

measurements. Updating the particle map may include executing a ray trace of the accumulated synchronized sensor data and applying a range sensor model to the accumulated synchronized sensor data. Updating the particle weight may be based on a number of measured ranges of the accumulated synchronized sensor data matching predicted ranges.

The details of one or more implementations of the disclosure are set forth in the accompanying drawings and the description below. Other aspects, features, and advantages will be apparent from the description and drawings, and from the claims.

DESCRIPTION OF DRAWINGS

FIG. **1** is a front, top perspective view of an exemplary mobile robot.

FIG. **2** is a bottom, rear perspective view of the mobile robot shown in FIG. **1**.

FIG. **3** is a partial exploded perspective view of the mobile robot shown in FIG. **1**.

FIG. **4**A is a schematic view of an exemplary mobile robot having four infrared range finding sensors.

FIGS. **4**B and **4**C are schematic views of an exemplary infrared range finding sensor detecting an object.

FIG. **5** is a schematic view of an exemplary controller for a mobile robot.

FIG. **6** is a schematic view of an exemplary mobile robot having a navigation system.

FIG. **7** is a schematic view of an exemplary navigation system for mobile robot.

FIG. **8**A is schematic view of an exemplary robot scanning its environment to obtain range data.

FIG. **8**B is schematic view of an exemplary occupancy grid map.

FIG. **9** provides an exemplary arrangement of operations for a method of simultaneous localization and mapping (SLAM).

FIG. **10**A provides an exemplary arrangement of operations for a method of determining a robot localization quality.

FIG. **10**B provides an exemplary arrangement of operations for a method of determining a robot re-localization.

FIG. **11** provides an exemplary arrangement of operations for a method of updating a particle in a particle model.

FIG. **12** provides an exemplary arrangement of operations for a method of applying a range sensor model.

FIG. **13** provides an exemplary arrangement of operations for a method of simultaneous localization and mapping executed on a controller of a mobile robot.

Like reference symbols in the various drawings indicate like elements.

DETAILED DESCRIPTION

An autonomous robot movably supported may execute simultaneous localization and mapping (SLAM) on a controller to navigate and negotiate obstacles. For example, an autonomous cleaning robot may execute a SLAM routine navigate a cleaning area and to clean a surface while traversing that area.

Referring to FIGS. **1-3**, in some implementations, a robot **100** includes a body **110** supported by a drive system **120** that can maneuver the robot **100** across the floor surface **10** based on a drive command having x, y, and θ components, for example, issued by a controller **150**. The robot body **110** has a forward portion **112** and a rearward portion **114**. The drive system **120** includes right and left driven wheel modules **120***a*, **120***b* that may provide odometry to the controller **150**. The wheel modules **120***a*, **120***b* are substantially opposed along a transverse axis X defined by the body **110** and include respective drive motors **122***a*, **122***b* driving respective wheels **124***a*, **124***b*. The drive motors **122***a*, **122***b* may releasably connect to the body **110** (e.g., via fasteners or tool-less connections) with the drive motors **122***a*, **122***b* optionally positioned substantially over the respective wheels **124***a*, **124***b*. The wheel modules **120***a*, **120***b* can be releasably attached to the chassis **110** and forced into engagement with the cleaning surface **10** by respective springs. The robot **100** may include a caster wheel **126** disposed to support a forward portion **112** of the robot body **110**. The robot body **110** supports a power source **102** (e.g., a battery) for powering any electrical components of the robot **100**.

The robot **100** can move across the cleaning surface **10** through various combinations of movements relative to three mutually perpendicular axes defined by the body **110**: a transverse axis X, a fore-aft axis Y, and a central vertical axis Z. A forward drive direction along the fore-aft axis Y is designated F (sometimes referred to hereinafter as "forward"), and an aft drive direction along the fore-aft axis Y is designated A (sometimes referred to hereinafter as "rearward"). The transverse axis X extends between a right side R and a left side L of the robot **100** substantially along an axis defined by center points of the wheel modules **120***a*, **120***b*.

A forward portion **112** of the body **110** carries a bumper **130**, which detects (e.g., via one or more sensors) one or more events in a drive path of the robot **100**, for example, as the wheel modules **120***a*, **120***b* propel the robot **100** across the cleaning surface **10** during a cleaning routine. The robot **100** may respond to events (e.g., obstacles, cliffs, walls) detected by the bumper **130** by controlling the wheel modules **120***a*, **120***b* to maneuver the robot **100** in response to the event (e.g., away from an obstacle). While some sensors are described herein as being arranged on the bumper, these sensors can additionally or alternatively be arranged at any of various different positions on the robot **100**.

A user interface **140** disposed on a top portion of the body **110** receives one or more user commands and/or displays a status of the robot **100**. The user interface **140** is in communication with the robot controller **150** carried by the robot **100** such that one or more commands received by the user interface **140** can initiate execution of a cleaning routine by the robot **100**.

The robot controller **150** (executing a control system) may execute behaviors **300** (FIG. **7**) that cause the robot **100** to take an action, such as maneuvering in a wall following manner, a floor scrubbing manner, or changing its direction of travel when an obstacle is detected. The robot controller **150** can maneuver the robot **100** in any direction across the cleaning surface **10** by independently controlling the rotational speed and direction of each wheel module **120***a*, **120***b*. For example, the robot controller **150** can maneuver the robot **100** in the forward F, reverse (aft) A, right R, and left L directions. As the robot **100** moves substantially along the fore-aft axis Y, the robot **100** can make repeated alternating right and left turns such that the robot **100** rotates back and forth around the center vertical axis Z (hereinafter referred to as a wiggle motion). The wiggle motion can allow the robot **100** to operate as a scrubber during cleaning operation. Moreover, the wiggle motion can be used by the robot controller **150** to detect robot stasis. Additionally or alternatively, the robot controller **150** can maneuver the robot **100** to rotate substantially in place such that the robot **100** can maneuver out of a corner or away from an obstacle, for example. The robot controller **150** may direct the robot **100** over a substantially random (e.g., pseudo-random) path while traversing the

cleaning surface **10**. The robot controller **150** can be responsive to one or more sensors (e.g., bump, proximity, wall, stasis, and cliff sensors) disposed about the robot **100**. The robot controller **150** can redirect the wheel modules **120***a*, **120***b* in response to signals received from the sensors, causing the robot **100** to avoid obstacles and clutter while treating the cleaning surface **10**. If the robot **100** becomes stuck or entangled during use, the robot controller **150** may direct the wheel modules **120***a*, **120***b* through a series of escape behaviors so that the robot **100** can escape and resume normal cleaning operations.

The robot **100** may include a cleaning system **160** for cleaning or treating the floor surface **10**. The cleaning system **160** may include a dry cleaning system **160***a* and/or a wet cleaning system **160***b*. The dry cleaning system **160** may include a driven roller brush **162** (e.g., with bristles and/or beater flaps) extending parallel to the transverse axis X and rotatably supported by the robot body **110** to contact the floor surface **10**. The driven roller brush agitates debris off of the floor surface **10** and throws or guides the agitated debris into a collection bin **163**. The dry cleaning system **160** may also include a side brush **164** having an axis of rotation at an angle with respect to the floor surface **10** for moving debris into a cleaning swath area of the cleaning system **160**. The wet cleaning system **160***b* may include a fluid applicator **166** that extends along the transverse axis X and dispenses cleaning liquid onto the surface **10**. The dry and/or wet cleaning systems **160***a*, **160***b* may include one or more squeegee vacuums **168** (e.g., spaced apart compliant blades have a partial vacuum applied therebetween via an air pump) vacuuming the cleaning surface **10**.

To achieve reliable and robust autonomous movement, the robot **100** may include a sensor system **500** having several different types of sensors which can be used in conjunction with one another to create a perception of the robot's environment sufficient to allow the robot **100** to make intelligent decisions about actions to take in that environment. The sensor system **500** may include one or more types of sensors supported by the robot body **110**, which may include obstacle detection obstacle avoidance (ODOA) sensors, communication sensors, navigation sensors, etc. For example, these sensors may include, but not limited to, range finding sensors, proximity sensors, contact sensors, a camera (e.g., volumetric point cloud imaging, three-dimensional (3D) imaging or depth map sensors, visible light camera and/or infrared camera), sonar, radar, LIDAR (Light Detection And Ranging, which can entail optical remote sensing that measures properties of scattered light to find range and/or other information of a distant target), LADAR (Laser Detection and Ranging), etc. In some implementations, the sensor system **500** includes ranging sonar sensors, proximity cliff detectors, contact sensors, a laser scanner, and/or an imaging sonar.

There are several challenges involved in placing sensors on a robotic platform. First, the sensors need to be placed such that they have maximum coverage of areas of interest around the robot **100**. Second, the sensors may need to be placed in such a way that the robot **100** itself causes an absolute minimum of occlusion to the sensors; in essence, the sensors cannot be placed such that they are "blinded" by the robot itself. Third, the placement and mounting of the sensors should not be intrusive to the rest of the industrial design of the platform. In terms of aesthetics, it can be assumed that a robot with sensors mounted inconspicuously is more "attractive" than otherwise. In terms of utility, sensors should be mounted in a manner so as not to interfere with normal robot operation (snagging on obstacles, etc.).

Referring to FIGS. **1** and **4**A, in some implementations, the sensor system **500** includes one or more range finding sensors **510** disposed on the robot body **110** or bumper **130**. In the example shown in FIG. **1**, the sensor system **500** includes three range finders **510***a-c* disposed on the bumper **130** and arranged with a field of view **512** substantially normal to the robot body **110** (e.g., radially outward). One range finder **510***a* may have its field of view **512** centered along the forward drive direction F. The field of view **512** may have an angle β of between about 5° and about 45°. Moreover, one or more of the range finders **510***a-c* may scan side-to-side and/or up-and-down with respect to the forward drive direction F to increase a lateral and vertical field of view **512** of the respective range finder **510**. In the example shown, the sensor system **500** includes first, second, third, and fourth range finders **510***a-d* disposed on the robot body **110** and arranged equilaterally with respect to each other (e.g., spaced every 90 degrees about the round robot body **110**). The four range finders **510***a-d* may be arranged as forward (i.e., directed along the forward drive direction F), right, left, and rearward (opposite of forward drive direction F) sensors. Other arrangements are possible as well, such just one range finder **510** (e.g., with the use of odometry) or many range finders disposed around the robot body **110**. The range finders **510***a-d* can detect a distance to objects **12** in a scene **10** about the robot and in the field of view **512** of the range finders **510***a-d*.

The infrared range finders **510***a-d* offer a relatively low-cost, small package solution compared to a rotating scanner that may require mounting on top of the robot **100**. A top mounted upwardly protruding scanning sensor (to obtain the 360 degree rotating field of view) may become a problem for obstacle avoidance. For example, such a sensor can cause wedging problems when the robot **100** attempts to pass under an obstacle.

Referring to FIGS. **4**B and **4**C, the range finder **510** may be an infrared range finding sensor that employs triangulation. The range finder **510** includes an emitter **514** that emits a pulse of light (e.g., wavelength range of 850 nm+/−70 nm) and a detector **516** that detects a reflection back (or no reflection at all). When the emitted light reflects off of a surface of an object **12**, the reflected light returns at an angle α dependent on a distance D of the reflecting object **12**. By detecting the reflected beam angle α, the sensor system **500** can determine the distance D to the reflecting object **12**. In some examples, the detector **516** has a precision lens that transmits the received reflected light onto an enclosed linear CCD (charge coupled device) array based on the triangulation angle α. The CCD array may determine the angle α and provide a corresponding analog value. The range finder **510** may apply a modulated frequency to the emitted IR beam, which can make the range detecting immune to interference from ambient light. In other words, the range finder **510** may be capable of detecting a wall in full sunlight.

The bumper **130** may include one or more bump sensors **530** (e.g., contact sensor, switch, or infrared proximity sensor) for sensing contact with a bumped object. In some examples, the bumper **130** includes right and left bump sensors **530***a*, **530***b* for sensing a directionality of the bump with respect to the forward drive direction (e.g., a bump vector).

Referring to FIGS. **5** and **6**, in some implementations, reasoning or control software, executable on the controller **150** (e.g., on a computing processor), uses a combination of algorithms executed using various data types generated by the sensor system **500**. The reasoning software processes the data collected from the sensor system **500** and outputs data for

making navigational decisions on where the robot **100** can move without colliding with an obstacle, for example.

To operate autonomously, the robot **100** may use a navigation system **600** to simultaneously localize and map its surroundings, using sensory inputs from the sensor system **500**. Simultaneous localization and mapping (SLAM) is a technique the robot **100** may use to build up a map **620** (e.g., an occupancy map) within an unknown environment or scene **10** (without a-priori knowledge), or to update the map **620** within a known environment (with a-priori knowledge from a given map), while at the same time keeping track of its current location. The navigation system **600** allows the robot **100** to navigate a scene **10** without colliding into obstacles **12** or falling down stairs. The navigation system **600** may be a behavior based system stored and/or executed on the robot controller **150**. Moreover, the navigation system **600** may communicate with the drive system **120** and the sensor system **500** to receive odometry and sensor data, such as gyroscopic data from an inertial measurement unit **520** and/or range data **515**, to determine and issue drive commands to the drive system **120**.

Odometry is the use of sensor data to estimate change in position over time (distance traveled). In some examples, an encoder is disposed on the drive system **200** for measuring wheel revolutions, therefore a distance traveled by the robot **100**. The controller **150** may use odometry in assessing a confidence level for a robot location. In some implementations, the sensor system **500** includes an odometer and/or an angular rate sensor (e.g., gyroscope or the IMU **520**) for sensing a distance traveled by the robot **100**. A gyroscope is a device that can be used for measuring and/or maintaining orientation, based on the principles of conservation of angular momentum. The controller **150** may use odometry and/or gym signals received from the odometer and/or angular rate sensor, respectively, to determine a location of the robot **100** in a working floor area **5**. In some examples, the controller **150** uses dead reckoning. Dead reckoning is the process of estimating a current position based upon a previously determined position, and advancing that position based upon known or estimated speeds over elapsed time, and course. By knowing a robot location in the working area **5** (e.g., via odometry, gyroscope, etc.) as well as a sensed location of one or more objects **12** in the working area **5** (via the sensor system **500**), the controller **150** can assess a relatively higher confidence level of a location or movement of the robot **100** on an occupancy map **620** and in the working area **5** (versus without the use of odometry or a gyroscope).

Referring to FIG. **5**, in some implementations, the controller **150** (e.g., a device having one or more computing processors in communication with memory capable of storing instructions executable on the computing processor(s)) executes a control system **210**, which includes a behavior system **210***a* and a control arbitration system **210***b* in communication with each other. The control arbitration system **210***b* allows robot applications **220** to be dynamically added and removed from the control system **210**, and facilitates allowing applications **220** to each control the robot **100** without needing to know about any other applications **220**. In other words, the control arbitration system **210***b* provides a simple prioritized control mechanism between applications **220** and resources **240** of the robot **100**.

The applications **220** can be stored in memory of or communicated to the robot **100**, to run concurrently on (e.g., on a processor) and simultaneously control the robot **100**. The applications **220** may access behaviors **300** of the behavior system **210***a*. The independently deployed applications **220** are combined dynamically at runtime and to share robot resources **240** (e.g., drive system **120** and/or cleaning systems **160**, **160***a*, **160***b*). A low-level policy is implemented for dynamically sharing the robot resources **240** among the applications **220** at run-time. The policy determines which application **220** has control of the robot resources **240** as required by that application **220** (e.g. a priority hierarchy among the applications **220**). Applications **220** can start and stop dynamically and run completely independently of each other. The control system **210** also allows for complex behaviors **300**, **300***a-n* which can be combined together to assist each other.

The control arbitration system **210***b* includes one or more application(s) **220** in communication with a control arbiter **260**. The control arbitration system **210***b* may include components that provide an interface to the control arbitration system **210***b* for the applications **220**. Such components may abstract and encapsulate away the complexities of authentication, distributed resource control arbiters, command buffering, coordinate the prioritization of the applications **220** and the like. The control arbiter **260** receives commands from every application **220** generates a single command based on the applications' priorities and publishes it for its associated resources **240**. The control arbiter **260** receives state feedback from its associated resources **240** and may send it back up to the applications **220**. The robot resources **240** may be a network of functional modules (e.g., actuators, drive systems, and groups thereof) with one or more hardware controllers. The commands of the control arbiter **260** are specific to the resource **240** to carry out specific actions. A dynamics model **230** executable on the controller **150** is configured to compute the center for gravity (CG), moments of inertia, and cross products of inertial of various portions of the robot **100** for the assessing a current robot state.

In some implementations, a behavior **300** is a plug-in component that provides a hierarchical, state-full evaluation function that couples sensory feedback from multiple sources, such as the sensor system **500**, with a-priori limits and information into evaluation feedback on the allowable actions of the robot **100**. Since the behaviors **300** are pluggable into the application **220** (e.g. residing inside or outside of the application **220**), they can be removed and added without having to modify the application **220** or any other part of the control system **210**. Each behavior **300** is a standalone policy. To make behaviors **300** more powerful, it is possible to attach the output of multiple behaviors **300** together into the input of another so that you can have complex combination functions. The behaviors **300** are intended to implement manageable portions of the total cognizance of the robot **100**.

In the example shown, the behavior system **210***a* includes an obstacle detection/obstacle avoidance (ODOA) behavior **300***a* for determining responsive robot actions based on obstacles perceived by the sensor (e.g., turn away; turn around; stop before the obstacle, etc.). Another behavior **300** may include a wall following behavior **300***b* for driving adjacent to a detected wall (e.g., in a wiggle pattern of driving toward and away from the wall).

Referring to FIGS. **6** and **7**, in some implementations, the navigation system **600** includes a simultaneous localization and mapping (SLAM) controller **610**, executable on a computing processor (e.g., on the robot controller **150**), that builds maps **620** (e.g., feature based maps, occupancy maps and/or ground plane maps) using sensor data received from the sensor system **500**. In some examples, the SLAM controller **610** relies on range data **515** (points) received from the range finders **510***a-d*, gyroscopic data **525** received from the inertial

measurement unit **520**, bump data **535** received from the bump sensor(s) **530**, **503***a-b*, and/or odometry **205** received from the drive system **200**.

Maps **620** can be used to determine a location within a scene or environment **10** and to depict an environment for planning and navigation. The maps **620** support the assessment of actual location by recording information obtained from a form of perception and comparing it to a current set of perceptions. The benefit of a map **620** in aiding the assessment of a location increases as the precision and quality of the current perceptions decrease. Maps **620** generally represent the state at the time that the map **620** is provided or produced. This is not necessarily consistent with the state of the environment at the time the map **620** is used. Other localization techniques include monocular visual SLAM (MonoSLAM) and implementations using an extended Kalman filter (EKF) for MonoSLAM solutions.

FIG. **8**A illustrates the robot **100** scanning its environment, a scene **10**, to obtain range data **515**. In this case, a range scan **517** detects a wall **7** intersecting the floor **5** in the scene **10**, demarcating a trackable feature **14**. FIG. **8**B illustrates an exemplary occupancy grid map **620**, which may be a 2D-XY grid **622** having cells **624** along an X direction and a Y direction. Each cell **624** of the occupancy grid map **620** contains a probability of occupancy based on the accumulation of range finder data resulting from the existence of an object **12** falling within that cell **624**. In some examples, each cell **624** has a fixed size, such as 5 cm by 5 cm. The occupancy grid map **620** accumulates range data **515** having x and y coordinates from the range finding sensor(s) **510**, **510***a-d* by receiving range points **515** in cells **624** occupying the corresponding x, y values of the range points **515**. For example, a first cell occupying x=0-5 cm and y=0-5 cm receives a point **515** having an x value of 3 cm and a y value of 2 cm. Each cell **624** may have a classification. A cell **624***f* having a probability of occupancy less than 50%, for example, may be classified as unoccupied or free, whereas a cell **624***o* having an occupancy greater than or equal to 50%, in this example may be classified as occupied.

Referring to FIGS. **6**-**8**B, the SLAM controller **610** may use a particle filter **630** (e.g., a Kalman filter or extended Kalman filter (EKF)) having a particle model **645** made up of a set of particles $\mathbf{640}_{1-n}$ that represent hypotheses of a pose P of the robot **100** in its environment. Each particle $\mathbf{640}_n$ builds its own associated map data. As a result, each particle $\mathbf{640}_n$ may have an associated particle map **642**, robot pose **644**, and/or a particle weight **646**. Each particle $\mathbf{640}_n$ may represent a hypothesis, in terms of its associated map **642** and robot pose **644**, of the location of the robot **100** with respect to its surroundings. The SLAM controller **610** may score and attribute a particle weight **646** to each particle $\mathbf{640}_n$.

The pose P or location in space (i.e., x, y, and θ in Euclidean planar space) of a mobile robot usually changes in time, so data aggregation may involve referencing spatial measurements back to a common datum. In general, SLAM algorithms estimate a new pose P of the robot **100** based on the commanded motion and subsequent distance measurements from the robot **100** to the outside world (i.e., the scene **10**). In order for the pose distribution (probabilistic estimate of the true location) to converge, the distance measurements should be relatively unique. For example, a single distance measurement in an empty square room may provide some information about the robot's location; however, a determined pose P based on so much ambiguity and estimation may do more harm than good for localizing the robot **100**. Given the same situation, but having 10 different range measurements likely allows the robot **100** to determine if it is near a wall or a corner and even which particular wall or corner it is near.

The navigation system **600** may employ data aggregation, a technique used to construct a single dataset from groups of data collected across different sensor types (e.g., sonar, tactile, and/or proximity sensors) and/or at various times when acquired sensor data is sparse, which may result from sensors with low spatial resolution and/or slow update rates. In some implementations, the SLAM controller **610**, with data aggregation enabled, aggregates sensor readings across sensors (e.g., four separate IR range finders **510***a-d* and a virtual range sensor based on a wall-follower infrared proximity sensor **530**/wall follower behavior) and across time. For example, as the robot **100** moves forward, the range finders **510***a-d* capture range data (e.g., 30 points/meter). Unlike a rotating scanner that may obtain about 360 points per 360 degree revolution, the range finders **510***a-d* may capture relatively fewer points. As a result, rather than updating the map **620** after each sampling, the SLAM controller **610** updates the map **620** after a collection of samplings (i.e., a collection of points).

The SLAM controller **610** may update the map **620** on a periodic basis, such as after travelling a threshold distance (e.g., once every meter or half meter travelled by the robot **100**), after a threshold period of time (e.g., once every 1-3 seconds), or after collecting a threshold number of points (e.g., greater than 20 points). To aggregate across time the SLAM controller **610** stores sensor measurements as range and bearing pairs originating from the center of the robot **100**, along with a best estimate of the robot's pose P (x, y, and θ measurements of the robot's center to an arbitrarily oriented coordinate system established when the particular run began).

The SLAM controller **610** may accumulate range data **515** in a data buffer **612** (e.g., non-transitory memory) until it has acquired a predefined amount. During the accumulation period, the position or pose P of the robot **100** becomes less and less well-known, since the robot **100** continues to move, which adds uncertainty. Once the data buffer **612** is full or reaches a threshold capacity, the SLAM controller **610** processes the buffered range data **515** as a group and updates the map **620** and corrects the robot's position or pose P. The SLAM controller **610** may balance a cost in increased error when moving with a correction accuracy gain that results from accumulating more range data **515**. In some implementations, the SLAM controller **610** processes the range data after collecting 100 points. This may correspond to approximately 4 feet or less of travel between updates, but could be more depending on the particular geometry of a given room and the maximum detection range of the sensor. The proper balance for any robot is a function of the quality of the odometry sensor(s) and range sensor(s), and the environments that it's expected to operate in.

In some implementations, the SLAM controller **610** forces processing of the accumulated data if the robot **100** travels beyond a certain distance or rotates through a certain number of degrees. The trigger for processing data may also be dynamically based on other measures of the system (e.g., a current confidence of the localization of the robot **100**, a quality of the accumulated data, etc.). In some examples, the SLAM controller **610** keeps points that match the map **620** and drop any points that do not. The SLAM controller **610** may execute a matching routine that computes how well a given point matches the map (e.g., is within a threshold distance of a known point). If the range finders **510***a-d* fail to receive a reflection from an object, rather than assuming an object is not present, the SLAM controller **610** may ignore the corresponding range data (in lieu of other subsequently acquired data).

The navigation system **600** may include a localization quality estimator **650** for determining a confidence in the localization of the robot **100**. Rather than assuming that all range data received by the robot **100** will be helpful in improving the robot's localization and the building of the map **620**, which may be true when the available range data **515** is rich and generally accurate, the SLAM controller **610** may receive a confidence level of the robot localization from the localization quality estimator **650** before making any such determination. When the collected range data **515** is abundant, the robot **100** may be unlikely to become grossly delocalized. However, when the collected range data **515** is sparse, has very limited range, or becomes highly variable when the measured distance is greater than a threshold distance, such as about one meter for infrared ranging sensors, there may be periods of time when the navigation system **600** does not have a very high confidence in the pose P of the robot **100**. The SLAM controller **610** may use the localization quality estimator **650** to assess the quality Q of the believed pose P of the robot **100**.

In some implementations, the localization quality estimator **650** uses the particle weights **646** to estimate if the robot **100** has become delocalized by determining an average particle weight **646** for the particles **640** of the particle model **645** (or a subset thereof) to provide an estimate of localization quality Q. If the robot **100** is well-localized the average weight **646** is high, otherwise it is low. The localization quality estimator **650** may apply one or more filters to smooth out the determination. The localization quality estimator **650** may determine an instantaneous localization of the robot **100** (i.e., the localization quality according to the data available from the most recent range measurements **515**) by processing the instantaneous localization through a fast low-pass filter **1010** and a slow low-pass filter **1020** and comparing the ratio of two low-pass filters **1010**, **1020**. The localization quality estimator **650** may then put the instantaneous localization results through a leaky integrator **1030**, so as to estimate a stable localization. When the value of the integrator **1030** is above a predefined threshold the robot **100** is considered to be well localized.

The SLAM controller **610** may update particles **640***n* in the particle model **645** using a robot motion model **660**. The robot motion model **660** models movement, including corresponding measurement error of the robot **100**. Using odometry and/or an inertial measurement unit (IMU) **520**, the robot motion model **660** measures motion (e.g., travel distance and/or travel path) of the robot **100**. Due to drive wheel slip, encoder tolerances, etc., the measured odometry may include an error term. For example, if the robot **100** rotates 90° and translates one meter, the measured odometry may be off by +/−10° of rotation and +/−5 cm of translation. Moreover, the IMU **520** may have a different error, depending on it method of measurement (e.g., gyro). The robot motion model **660** may be a Gaussian error model centered on a travel vector derived from a travel vector derived from odometry and/or the IMU **520**, where some portion of the Gaussian curve represents noise.

The SLAM controller **610** may receive an input of range data **515** estimating locations of features **14** of the environment **10** relative to the robot **100** (e.g., relative to the center C of the robot **100**). The SLAM controller **610** receives distance estimates of obstacles **12** at a given height off of the floor **5** as dictated by the mounting position and orientation of the sensor (e.g., range finders **510**).

From the individual pose **644** (position hypotheses) of the particles $\mathbf{640}_n$, the particle filter **630** may select the hypothesis of the particle $\mathbf{640}_n$ having the highest weight **646** as a best pose **644** or position hypothesis of the robot **100** at a current time. The robot controller **150** can use the pose **644** or position hypothesis of the selected particle $\mathbf{640}_n$ and its associated particle map **642** to determine a way point for issuing a drive command to the drive system **200**. In other words, the robot controller **150** uses the particle map **642** of the selected particle $\mathbf{640}_n$ to navigate at that given moment in time. For example, if the robot **100** has a drive goal to drive from a first room to a second room, the navigation system **600** may take a snapshot of a selected particle $\mathbf{640}_n$ (i.e., position hypothesis and/or maps) at a time of drive command issuance, and perform localization temporarily of that particle's hypothesis and that particle's map **642**.

The SLAM controller **610** may update the particles $\mathbf{640}_n$ in a probabilistic manner using the robot motion model **660**. The robot motion model **660** provides a probability distribution of new positions to which the robot **100** may have moved (e.g., based on odometry and/or an IMU **520**). For example, if the SLAM controller **610** estimates that the robot **100** moved forward one meter, but with some error in that movement, rather than updating all of the particles $\mathbf{640}_n$ by moving them all forward one meter, for each particle $\mathbf{640}_n$, the SLAM controller **610** generates a sample based on a position distribution of the robot motion model **660** centered on one meter of forward movement with a threshold variance (e.g., 10%). A first particle $\mathbf{640}_1$ may receive a sample of 0.9 meters of forward movement. A second particle $\mathbf{640}_2$ may receive a sample of 1.1 meters of forward movement. A third particle $\mathbf{640}_3$ may receive a sample of 1.05 meters of forward movement, and so on, such that each particle $\mathbf{640}_n$ receives its own sample based on the position distribution. The SLAM controller **610** can update each particle $\mathbf{640}_n$ for motion based on its received sample.

The SLAM controller **610** may build the map **620** only when the robot **100** is well localized (i.e., has a good confidence of its location). If the robot **100** is not well localized, the navigation system **600** may cause the controller **150** to issue a drive command to maneuver the robot **100** to a known object, such as in contact with a wall or corner, to localize the robot **100** with respect to that known object. Moreover, to improve localization, the navigation system **600** may execute path planning for a path within a field of view **512** of the range finders **510***a-d* or other sensors of the sensor system **500**. If the robot **100** becomes lost, it may execute a behavior **300** that moves the robot **100** in a manner (e.g., spiral movement) that probabilistically will find an object **12**, such as a wall. The robot **100** may execute the wall-following behavior **300***b* to not only follow the wall to re-localize, but also use the wall-following as a virtual proximity sensor when the robot **100** follows the wall at a fixed distance or senses contact with the wall using the bump sensor(s) **530**.

When the SLAM controller **610** is confident that the robot pose P is well-known, it may use the range data **515** of the range finders **5100***a-d* to add occupancy probabilities to the occupancy grid map/model **620**. However, if the SLAM controller **610** is not confident in the robot's localization, it may skip the step of modifying/updating the occupancy grid map/model **620**. All other parts of the SLAM process may proceed as usual. This technique causes the map **620** to become frozen in the last known-good state and to remain that way until the robot **100** is able to regain a high-quality estimate of its position (pose P), at which time the SLAM controller **610** may resume adding occupancy data to the map **620**.

In short, this technique helps prevent the system from destroying a perfectly good map **620** due to what would otherwise be a temporary loss of localization. If the map **620**

becomes significantly corrupted it may be very difficult, if not impossible, to localize successfully.

The SLAM controller **610** may execute selective resampling. Resampling may occur after the SLAM controller **610** processes all of the motion and range data and computes a weight **646** for each particle **640***n* in the particle model **645**. The particle weight **646** of a particle **640***n* is based on a degree of agreement between its corresponding particle map **642** and the range data collected from the range finding sensor(s) **510***a-d*. Resampling is an evolutionary process in which strongly weighted particles **640***n* are more likely to be selected into a new particle population or particle model **645** than weakly weighted particles **640***n*. In some examples, resampling occurs on each cycle of the SLAM algorithm.

When executing with sparse range data, the SLAM controller **610** may find it difficult to distinguish strong particles **640***n* from weak particles **640***n* in some cycles of the SLAM algorithm. At such times, the shape of the particle weight distribution may be relatively flat and resampling may be unhelpful. In some instances, resampling may be harmful in such a situation, because weak particles **640***n* have a greater chance of replicating than they should, and strong particles **640***n* have a lesser chance of replicating than they ought to. The solution to this problem is to resample only when there is adequate difference in the weighting of the particles **640***n* that make up the particle model **645**. When there is not enough differentiation, the resampling step is skipped and the rest of the algorithm continues as usual.

If the SLAM controller **610** encounters a long period of time without resampling, as may occur if the model were to become significantly damaged, the SLAM controller **610** may replace large portions of the particle distribution with random particles **640***n* (or particles placed with intelligent bias based on some characteristic of the model or on certain sensor data).

FIGS. **9-12** illustrate an exemplary arrangement of operations for a method of simultaneous localization and mapping (SLAM). FIG. **9** provides an exemplary arrangement **900** of operations for a main routine of the method. The method includes initializing a robot pose P, such as x=0, y=0, and θ=0°, and initializing a particle model **645** having n particles **640**. Associated with each particle **640***n* is a map **642**, a pose **644**, and a weight **646** (i.e., confidence rating). The method further includes estimating a change in the robot pose ΔPose (i.e., as dx, dy, dθ), for example, using wheel odometry **205** and/or gyroscopic data **525** (e.g., from the inertial measurement unit **520**), acquiring range data **515** (e.g., form the range finding sensor(s) **510***a-d*), and optionally acquiring bumper data **535** (e.g., from the bumper sensor **530**). The method includes synchronizing range data **515** and bumper data **535** with change(s) in the robot pose (i.e., ΔPose data), estimating a localization quality Q (e.g., using the localization quality estimator **650**), and updating each particle **640***n* in the particle model **645**. The method includes computing the strength or weight **646** of a particle bunch, for example, using a mean, fast low-pass filter, and/or a slow low-pass filter. If the mean strength **646** of the particle bunch is above a threshold strength **646**, the method includes re-sampling the particle distribution **645**, setting a pose belief P to that of the strongest particle pose **644**, and returning to the step of synchronizing newly acquired range data **515** and bumper data **535** with newly acquired ΔPose data (e.g., odometry **205**). If the mean strength **646** of the particle bunch **645** is below the threshold particle strength **646**, the method includes returning to the step of synchronizing newly acquired range data **515** and bumper data **535** with newly acquired ΔPose data (e.g., odometry **205**). As a result, the method may include resampling only when the SLAM Controller **610** can differentiate between strong and weak particles **640***n*.

FIG. **10**A provides an exemplary arrangement **1000** of operations for a method of determining a robot localization quality Q. The method includes computing an instantaneous localization value, which may be the value of the particle strength a passed through a fast low-pass filter and referenced to the strength as passed through a slower low-pass filter. If the instantaneous localization is above a threshold quantity, the method includes increasing a localization score (if the localization score is below a maximum value). Otherwise, the method includes decreasing a localization score (if the localization score is above a minimum value). If the localization score is above a threshold score, the robot **100** is considered localized.

FIG. **10**B provides an exemplary arrangement **1001** of operations for a method of robot re-localization. If the robot **100** determines it is delocalized (e.g., based on the robot localization quality Q), rather than degrading its map **620**, the robot **100** may decide to use an old map **620** that the robot **100** knows is good and/or repopulate the particle model **645**. In other words, rather than using bad information to update the map **620** (e.g., contributing to map drift) when the robot **100** becomes delocalized, the robot **100** may stop building the map **620** until it becomes re-localized again. In some implementations, the SLAM controller **610** may replace large portions of the particle distribution with clones of "good" particles **640** and/or random particles **640***n*. For example, the SLAM controller **610** may access a last know "good" particle **640** and create a new particle bunch from that "good" particle **640**. The SLAM controller **610** may maintain a time-series buffer (e.g., record in non-transitory memory) of the best maps **620** and poses P of the robot **100** over a period of time. The SLAM controller **610** may copy or partially copy one or more "good" particles **640** corresponding to the buffered best maps **620** and poses P of the robot **100** to repopulate the particle model **645**. Moreover, the SLAM controller **610** may add a number of randomly generated particles **640** and/or kill off any determined "bad" particles **640** as well. The robot **100** may switch to a localization-only mode and maneuver itself about until it becomes confidently localized. Once localized again, the robot **100** may switch back to a SLAM-mode.

In some implementations, when the robot **100** determines it is delocalized, the robot controller **150** executes the wall-following behavior **300***b* to follow a wall for re-localization. The robot **100** may use the wall-following as a virtual proximity sensor when the robot **100** follows the wall at a fixed distance or senses contact with the wall using the bump sensor(s) **530**. Moreover, the SLAM controller **610** may add new particles **640** to the particle model **645** based on the virtual proximity sensor data, allowing the robot to not only re-localize off of the wall, but also add reliable particles **640** to the particle model **645**.

FIG. **11** provides an exemplary arrangement **1100** of operations for a method of updating a particle **640***n* in the particle model **645**. The method includes applying the robot motion model **660** for any change in robot pose (ΔPose=dx, dy, dθ). The robot motion model **660** may be represented as:

$$x=x+dx+\mathrm{GN}*C1*dx+\mathrm{GN}*C2*dy \quad (1)$$

$$y=y+dy+\mathrm{GN}*C2*dy+\mathrm{GN}*C4*dx \quad (2)$$

$$\theta=\theta+d\theta+\mathrm{GN}*C5*d\theta+\mathrm{GN}*C6*(dx+dy) \quad (3)$$

where GN=Gaussian noise.

The method further includes adding valid range data **515** to the data buffer **612**, for example, using a current robot pose P

as an origin. If the range data clustering is enabled, the method includes checking if a data buffer threshold has been met. If the data buffer threshold has not been met, then the method returns (e.g., to the main SLAM method). If the range data clustering is disabled or the data buffer threshold has been met, the method includes executing a ray trace for each range data bearing. An exemplary input for the ray trace may include a robot bearing and/or a map **620**, **642**, and an exemplary output may include a predicted range for a given bearing. The method further includes applying a range sensor model **670** (FIG. **7**). An exemplary input for the range sensor model **670** may include a measured range and the predicted range, and an exemplary output may include a probability of occupancy of each cell along the ray trace. The method includes determining if a localization of the robot **100** is above a threshold quality Q based on a received robot state. If the robot **100** is well localized, the method includes updating a particle map **642** with the output of the range sensor model **670**, reducing the occupancy probability of cells **624** of the map **620** underneath the robot **100**, and computing a new particle strength/weight **646**. If the robot **100** is not well localized, the method proceeds to computing the new particle strength/weight **646**. The particle strength/weight **646** can be based on a number of measured ranges that match the expected ranges, based on the particle map **642**. Afterwards, the method returns (e.g., to the main SLAM method).

FIG. **12** provides an exemplary arrangement **1200** of operations for a method of applying the range sensor model **670**. The method includes determining if a predicted range is available. This may entail determining if a map value exists at a ranged location. If a predicted range is available, the method includes determining a range error, where

$$\text{Range Error}=\text{abs}(\text{Measured Range}-\text{Predicted Range}) \quad (4)$$

and determining a first probability of occupancy assuming an expected target is detected by the robot **100**. This may entail assigning one of five range values (e.g., close, somewhat close, medium, somewhat far, and far) based on a magnitude of range error. The method further includes determining a second probability of occupancy assuming an expectedly close target is detected by the robot **100**. This may entail assigning one of three range values (e.g., close, medium, and far) based on a range difference.

$$\text{Range Difference}=\text{abs}(\text{Measured Range}-\text{Actual Range})-\text{abs}(\text{Predicted Range}-\text{Actual Range}) \quad (5)$$

The assigned range value can be based on how much closer the measured range was to the target object than the predicted range. The method further includes determining a third probability of occupancy assuming that a long range measurement results from a failure to detect a close object. This may entail assigning a predetermined value.

If a predicted range is not available, the method includes determining a fourth probability of occupancy an expected target object was detected. This may entail assigning one of three range values (e.g., close, medium, and far) based on a magnitude of the measured range.

The method includes determining a fifth probability of occupancy of a final target object, which can be a weighted average of each of the determined probabilities of occupancy (e.g., of the first, second and third probabilities of occupancy or of the fourth probability of occupancy). The method also includes determining a sixth probability of occupancy for cells between the robot and the measured range to the target object. This may entail assigning values based on how close cells are to the robot. The sixth probability of occupancy (also referred to as the cell probability of occupancy) is returned.

FIG. **13** provides an exemplary arrangement **1300** of operations for a method of simultaneous localization and mapping executed on the SLAM controller **610** of the robot **100**. The method includes initializing **1302** the robot pose P and initializing **1304** the particle model **645** of the particle filter **630** executing on the SLAM controller **610**. The particle model **645** includes particles **640***n*, each having an associated map **642**, robot pose **644**, and weight **646**. The method also includes receiving **1306** sparse sensor data **205**, **515** (e.g., odometry **205**, range data **515**, inertial data **525**, and/or bump data **535**) from the sensor system **500** of the robot **100**, synchronizing **1308** the received sensor data **205**, **515**, **525**, **535** with a change in robot pose ΔP, accumulating **1310** the synchronized sensor data **205**, **515**, **525**, **535** over time in non-transitory memory **612** (buffer), and determining **1312** a localization quality Q of the robot **100**. When the accumulated sensor data **205**, **515**, **525**, **535** exceeds a threshold accumulation and the robot localization quality Q is greater than a threshold localization quality, the method includes updating **1314** particles **640***n* of the particle model **645** with accumulated synchronized sensor data **205**, **515**, **525**, **535**. The method includes determining **1316** a weight **646** for each updated particle **640***n* of the particle model **645** and setting **1318** a robot pose belief P to the robot pose **644** of the particle **640***n* having the highest weight **646** when a mean weight **646** of the particles **640** is greater than a threshold particle weight **646**.

In some implementations, the method includes sampling the particle model **645** for a particle population **640***n* and resampling the particle model **645** for the particle population when the robot localization quality Q is greater than the threshold localization quality Q. The method may include replacing a portion of the particle population **640***n* with randomly selected particles **640***n* of the particle model **645** when resampling fails to occur within a threshold sampling time period. Additionally or alternatively, the method may include replacing a portion of the particle population **640***n* with particles **640***n* selected from the particle model **645** based on the accumulated synchronized sensor data **205**, **515**, **525**, **535** when resampling fails to occur within the threshold sampling time period.

The method may include determining the change in robot pose ΔP using odometry **205** received from a drive system **200** of the robot **100** and inertial measurements **525** from an inertial measurement unit **520** of the robot **100**. In some examples, determining the robot localization quality Q includes computing an instantaneous localization (x, y, θ), receiving the instantaneous localization (x, y, θ) through a fast low-pass filter **1010**, receiving the instantaneous localization (x, y, θ) through a slow low-pass filter **1020**, and receiving the instantaneous localization (x, y, θ) through a leaky integrator **1030**. The method may include comparing a ratio of results of the two low-pass filters **1010**, **1020** integrated by the integrator **1030**. When a result of the integrator **1030** is above a threshold value, the method may include determining the robot **100** as well localized (e.g., by assigning a localization quality Q accordingly).

The sensor data **205**, **515**, **525**, **535** may include range data **515** (e.g., from one or more infrared range finding sensors) and the synchronized sensor data **205**, **515**, **525**, **535** include range measurement and bearing pairs. The bearings may be determined from the known mount locations of the sensors **510***a-d*.

In some implementations, the method includes updating the map **642**, the pose **644**, and the weight **646** of each particle **640***n*. Updating the particle pose **644** may include applying a robot motion model **660**. The robot motion model **660** models

movement of the robot **100** based on odometry **205** and inertial measurements **525**. Updating the particle map **642** may include executing a ray trace of the accumulated synchronized sensor data **205**, **515**, **525**, **535** and applying a range sensor model **670** to the accumulated synchronized sensor data **205**, **515**, **525**, **535**. Updating the particle weight **646** may be based on a number of measured ranges **515** of the accumulated synchronized sensor data **205**, **515**, **525**, **535** matching predicted ranges **515**.

Executing the ray trace may include, for each range measurement and bearing pair, receiving the bearing **205** and an existing particle map **642**, and computing a predicted range **515**. The method may further include receiving a measured range **515**, receiving the predicted range **515**, and computing a probability of occupancy of an object **12** in each cell **622** of the particle map **642** along the ray trace. In some examples, applying the range sensor model **670** includes only updating particle map cells **624** corresponding to the synchronized sensor data **205**, **515**, **525**, **535**.

In some implementations, applying the range sensor model **670** includes computing a range error as an absolute difference between the measured range **515** and the predicted range **515** and computing the occupancy probability within each cell **624** of the particle map **642** along the ray trace based on the range error. For each particle map cell **624** along the ray trace, the method may include computing a first occupancy probability assuming detection of an expected object **12**, computing a second occupancy probability assuming detection of an expectedly close object **12**, computing a third occupancy probability assuming failure to detect of an expected close object **12** within a threshold distance of the robot **100**, and computing a weighted average of the first, second, and third occupancy probabilities.

Various implementations of the systems and techniques described here can be realized in digital electronic circuitry, integrated circuitry, specially designed ASICs (application specific integrated circuits), computer hardware, firmware, software, and/or combinations thereof. These various implementations can include implementation in one or more computer programs that are executable and/or interpretable on a programmable system including at least one programmable processor, which may be special or general purpose, coupled to receive data and instructions from, and to transmit data and instructions to, a storage system, at least one input device, and at least one output device.

These computer programs (also known as programs, software, software applications or code) include machine instructions for a programmable processor, and can be implemented in a high-level procedural and/or object-oriented programming language, and/or in assembly/machine language. As used herein, the terms "machine-readable medium" and "computer-readable medium" refer to any computer program product, apparatus and/or device (e.g., magnetic discs, optical disks, memory, Programmable Logic Devices (PLDs)) used to provide machine instructions and/or data to a programmable processor, including a machine-readable medium that receives machine instructions as a machine-readable signal. The term "machine-readable signal" refers to any signal used to provide machine instructions and/or data to a programmable processor.

Implementations of the subject matter and the functional operations described in this specification can be implemented in digital electronic circuitry, or in computer software, firmware, or hardware, including the structures disclosed in this specification and their structural equivalents, or in combinations of one or more of them. Moreover, subject matter described in this specification can be implemented as one or more computer program products, i.e., one or more modules of computer program instructions encoded on a computer readable medium for execution by, or to control the operation of, data processing apparatus. The computer readable medium can be a machine-readable storage device, a machine-readable storage substrate, a memory device, a composition of matter effecting a machine-readable propagated signal, or a combination of one or more of them. The terms "data processing apparatus", "computing device" and "computing processor" encompass all apparatus, devices, and machines for processing data, including by way of example a programmable processor, a computer, or multiple processors or computers. The apparatus can include, in addition to hardware, code that creates an execution environment for the computer program in question, e.g., code that constitutes processor firmware, a protocol stack, a database management system, an operating system, or a combination of one or more of them. A propagated signal is an artificially generated signal, e.g., a machine-generated electrical, optical, or electromagnetic signal, that is generated to encode information for transmission to suitable receiver apparatus.

A computer program (also known as an application, program, software, software application, script, or code) can be written in any form of programming language, including compiled or interpreted languages, and it can be deployed in any form, including as a stand alone program or as a module, component, subroutine, or other unit suitable for use in a computing environment. A computer program does not necessarily correspond to a file in a file system. A program can be stored in a portion of a file that holds other programs or data (e.g., one or more scripts stored in a markup language document), in a single file dedicated to the program in question, or in multiple coordinated files (e.g., files that store one or more modules, sub programs, or portions of code). A computer program can be deployed to be executed on one computer or on multiple computers that are located at one site or distributed across multiple sites and interconnected by a communication network.

The processes and logic flows described in this specification can be performed by one or more programmable processors executing one or more computer programs to perform functions by operating on input data and generating output. The processes and logic flows can also be performed by, and apparatus can also be implemented as, special purpose logic circuitry, e.g., an FPGA (field programmable gate array) or an ASIC (application specific integrated circuit).

Processors suitable for the execution of a computer program include, by way of example, both general and special purpose microprocessors, and any one or more processors of any kind of digital computer. Generally, a processor will receive instructions and data from a read only memory or a random access memory or both. The essential elements of a computer are a processor for performing instructions and one or more memory devices for storing instructions and data. Generally, a computer will also include, or be operatively coupled to receive data from or transfer data to, or both, one or more mass storage devices for storing data, e.g., magnetic, magneto optical disks, or optical disks. However, a computer need not have such devices. Moreover, a computer can be embedded in another device, e.g., a mobile telephone, a personal digital assistant (PDA), a mobile audio player, a Global Positioning System (GPS) receiver, to name just a few. Computer readable media suitable for storing computer program instructions and data include all forms of non volatile memory, media and memory devices, including by way of example semiconductor memory devices, e.g., EPROM, EEPROM, and flash memory devices; magnetic disks, e.g.,

internal hard disks or removable disks; magneto optical disks; and CD ROM and DVD-ROM disks. The processor and the memory can be supplemented by, or incorporated in, special purpose logic circuitry.

To provide for interaction with a user, one or more aspects of the disclosure can be implemented on a computer having a display device, e.g., a CRT (cathode ray tube), LCD (liquid crystal display) monitor, or touch screen for displaying information to the user and optionally a keyboard and a pointing device, e.g., a mouse or a trackball, by which the user can provide input to the computer. Other kinds of devices can be used to provide interaction with a user as well; for example, feedback provided to the user can be any form of sensory feedback, e.g., visual feedback, auditory feedback, or tactile feedback; and input from the user can be received in any form, including acoustic, speech, or tactile input. In addition, a computer can interact with a user by sending documents to and receiving documents from a device that is used by the user; for example, by sending web pages to a web browser on a user's client device in response to requests received from the web browser.

One or more aspects of the disclosure can be implemented in a computing system that includes a backend component, e.g., as a data server, or that includes a middleware component, e.g., an application server, or that includes a frontend component, e.g., a client computer having a graphical user interface or a Web browser through which a user can interact with an implementation of the subject matter described in this specification, or any combination of one or more such backend, middleware, or frontend components. The components of the system can be interconnected by any form or medium of digital data communication, e.g., a communication network. Examples of communication networks include a local area network ("LAN") and a wide area network ("WAN"), an inter-network (e.g., the Internet), and peer-to-peer networks (e.g., ad hoc peer-to-peer networks).

The computing system can include clients and servers. A client and server are generally remote from each other and typically interact through a communication network. The relationship of client and server arises by virtue of computer programs running on the respective computers and having a client-server relationship to each other. In some implementations, a server transmits data (e.g., an HTML page) to a client device (e.g., for purposes of displaying data to and receiving user input from a user interacting with the client device). Data generated at the client device (e.g., a result of the user interaction) can be received from the client device at the server.

While this specification contains many specifics, these should not be construed as limitations on the scope of the disclosure or of what may be claimed, but rather as descriptions of features specific to particular implementations of the disclosure. Certain features that are described in this specification in the context of separate implementations can also be implemented in combination in a single implementation. Conversely, various features that are described in the context of a single implementation can also be implemented in multiple implementations separately or in any suitable sub-combination. Moreover, although features may be described above as acting in certain combinations and even initially claimed as such, one or more features from a claimed combination can in some cases be excised from the combination, and the claimed combination may be directed to a sub-combination or variation of a sub-combination.

Similarly, while operations are depicted in the drawings in a particular order, this should not be understood as requiring that such operations be performed in the particular order shown or in sequential order, or that all illustrated operations be performed, to achieve desirable results. In certain circumstances, multi-tasking and parallel processing may be advantageous. Moreover, the separation of various system components in the embodiments described above should not be understood as requiring such separation in all embodiments, and it should be understood that the described program components and systems can generally be integrated together in a single software product or packaged into multiple software products.

A number of implementations have been described. Nevertheless, it will be understood that various modifications may be made without departing from the spirit and scope of the disclosure. Accordingly, other implementations are within the scope of the following claims. For example, the actions recited in the claims can be performed in a different order and still achieve desirable results.

What is claimed is:

1. A method of simultaneous localization and mapping executed on a controller of an autonomous mobile robot, the method comprising:

initializing a robot pose;

initializing a particle model of a particle filter executing on the controller, the particle model having particles, each particle having an associated particle map, robot pose, and weight, the particle map having cells;

receiving sparse sensor data from a sensor system of the robot;

synchronizing the received sensor data with a change in robot pose;

accumulating the synchronized sensor data over time in non-transitory memory;

determining a localization quality of the robot;

when the accumulated sensor data exceeds a threshold accumulation and the robot localization quality is greater than a threshold localization quality, updating each particle of the particle model with the accumulated synchronized sensor data by:

computing a range error as an absolute difference between a measured range of the accumulated sensor data and a predicted range; and

computing a probability of occupancy of an object in each cell of the associated particle map along a ray trace of the accumulated synchronized sensor data based on the range error by:

computing a first occupancy probability assuming detection of an expected object;

computing a second occupancy probability assuming detection of an expected close object of the robot;

computing a third occupancy probability assuming a failure to detect an expected close object within a threshold distance of the robot; and

computing a weighted average of the first, second, and third occupancy probabilities;

determining a weight for each updated particle of the particle model; and

setting a robot pose belief to the robot pose of the particle having the highest weight when a mean weight of the particles is greater than a threshold particle weight.

2. The method of claim **1**, further comprising sampling the particle model for a particle population.

3. The method of claim **2**, further comprising resampling the particle model for the particle population when the robot localization quality is greater than the threshold localization quality.

4. The method of claim **3**, further comprising replacing a portion of the particle population with randomly selected

particles of the particle model when resampling fails to occur within a threshold sampling time period.

5. The method of claim **3**, further comprising replacing a portion of the particle population with particles selected from the particle model based on the accumulated synchronized sensor data when resampling fails to occur within a threshold sampling time period.

6. The method of claim **1**, further comprising determining the change in robot pose using odometry received from a drive system of the robot and inertial measurements from an inertial measurement unit of the robot.

7. The method of claim **1**, wherein the sensor data comprises range data and the synchronized sensor data comprises range measurement and bearing pairs.

8. The method of claim **7**, wherein updating particles comprises, for each particle:

updating its particle pose by applying a robot motion model to the accumulated synchronized sensor data, the robot motion model modeling movement of the robot based on odometry and inertial measurements;

updating its particle map by:

executing the ray trace of the accumulated synchronized sensor data; and

applying a range sensor model to the accumulated synchronized sensor data; and

updating its particle weight based on a number of measured ranges of the accumulated synchronized sensor data matching predicted ranges.

9. The method of claim **8**, wherein executing the ray trace comprises, for each range measurement and bearing pair:

receiving the bearing and an existing particle map; and

computing the predicted range.

10. The method of claim **9**, wherein applying the range sensor model comprises:

receiving the measured range; and

receiving the predicted range.

11. The method of claim **10**, wherein applying the range sensor model further comprises only updating particle map cells corresponding to the synchronized sensor data.

12. A method of simultaneous localization and mapping executed on a controller of an autonomous mobile robot, the method comprising:

initializing a robot pose;

initializing a particle model of a particle filter executing on the controller, the particle model having particles, each particle having an associated map, robot pose, and weight;

receiving sparse sensor data from a sensor system of the robot;

synchronizing the received sensor data with a change in robot pose;

accumulating the synchronized sensor data over time in non-transitory memory;

determining a localization quality of the robot comprising:

computing an instantaneous localization;

receiving the instantaneous localization through a fast low-pass filter;

receiving the instantaneous localization through a slow low-pass filter; and

receiving the instantaneous localization through a leaky integrator; and

when the accumulated sensor data exceeds a threshold accumulation and the robot localization quality is greater than a threshold localization quality, updating particles of the particle model with accumulated synchronized sensor data;

determining a weight for each updated particle of the particle model; and

setting a robot pose belief to the robot pose of the particle having the highest weight when a mean weight of the particles is greater than a threshold particle weight.

13. An autonomous mobile robot comprising:

a drive system configured to maneuver the robot over a floor surface;

a sensor system comprising at least one infrared range finding sensor producing range data of a scene about the robot;

a controller in communication with the drive system and the sensor system, the controller executing a simultaneous localization and mapping routine comprising:

initializing a robot pose;

initializing a particle model of a particle filter executing on the controller, the particle model having particles, each particle having an associatedab ide map, robot pose, and weight, the particle map having cells;

receiving sparse sensor data from a sensor system;

synchronizing the received sensor data with a change in robot pose;

accumulating the synchronized sensor data over time in non-transitory memory;

determining a localization quality of the robot;

when the accumulated sensor data exceeds a threshold accumulation and the robot localization quality is greater than a threshold localization quality, updating each particle of the particle model with the accumulated synchronized sensor data by:

computing a range error as an absolute difference between a measured range of the accumulated sensor data and a predicted range; and

computing a probability of occupancy of an object in each cell of the associated particle map along a ray trace of the accumulated synchronized sensor data based on the range error by:

computing a first occupancy probability assuming detection of an expected object;

computing a second occupancy probability assuming detection of an expected close object of the robot;

computing a third occupancy probability assuming failure to detect an expected close object within a threshold distance of the robot; and

computing a weighted average of the first, second, and third occupancy probabilities;

determining a weight for each updated particle of the particle model; and

setting a robot pose belief to the robot pose of the particle having the highest weight when a mean weight of the particles is greater than a threshold particle weight.

14. The robot of claim **13**, wherein the simultaneous localization and mapping routine further comprises sampling the particle model for a particle population.

15. The robot of claim **14**, wherein the simultaneous localization and mapping routine further comprises resampling the particle model for the particle population when the robot localization quality is greater than the threshold localization quality.

16. The robot of claim **15**, wherein the simultaneous localization and mapping routine further comprises replacing a portion of the particle population with randomly selected particles of the particle model when resampling fails to occur within a threshold sampling time period.

17. The robot of claim **15**, wherein the simultaneous localization and mapping routine further comprises replacing a

portion of the particle population with particles selected from the particle model based on the accumulated synchronized sensor data, when resampling fails to occur within a threshold sampling time period.

18. The robot of claim **13**, further comprising an inertial measurement unit, the simultaneous localization and mapping routine further comprises determining the change in robot pose using odometry received from the drive system and inertial measurements from the inertial measurement unit.

19. The robot of claim **13**, wherein the sensor data comprises range data from the at least one range finding sensor and the synchronized sensor data comprises range measurement and bearing pairs.

20. The robot of claim **19**, wherein updating particles comprises, for each particle:

updating its particle pose by applying a robot motion model to the accumulated synchronized sensor data, the robot motion model modeling movement of the robot based on odometry and inertial measurements;

updating its particle map by:

executing the ray trace of the accumulated synchronized sensor data; and

applying a range sensor model to the accumulated synchronized sensor data; and

updating its particle weight based on a number of measured ranges of the accumulated synchronized sensor data matching predicted ranges.

21. The robot of claim **20**, wherein executing the ray trace comprises, for each range measurement and bearing pair:

receiving the bearing and an existing particle map; and

computing the predicted range.

22. The robot of claim **21**, wherein applying the range sensor model comprises:

receiving the measured range; and

receiving the predicted range.

23. The robot of claim **22**, wherein applying the range sensor model further comprises only updating particle map cells corresponding to the synchronized sensor data.

24. The robot of claim **13**, wherein the sensor system comprises:

a first infrared range finding sensor arranged to aim along a forward drive direction of the robot;

a second infrared range finding sensor arranged to aim about 90 degrees to the right of the forward drive direction of the robot;

a third infrared range finding sensor arranged to aim about 90 degrees to the left of the forward drive direction of the robot; and

a fourth infrared range finding sensor arranged to aim rearward, opposite of the forward drive direction of the robot;

wherein the sensor data received by the simultaneous localization and mapping routine comprises range data from the infrared range finding sensors.

25. The robot of claim **24**, wherein the sensor system further comprises at least one bump sensor, the sensor data received by the simultaneous localization and mapping routine comprising bump data from the at least one bump sensor.

26. An autonomous mobile robot comprising:

a drive system configured to maneuver the robot over a floor surface;

a sensor system comprising at least one infrared range finding sensor producing range data of a scene about the robot;

a controller in communication with the drive system and the sensor system, the controller executing a simultaneous localization and mapping routine comprising:

initializing a robot pose;

initializing a particle model of a particle filter executing on the controller, the particle model having particles, each particle having an associated map, robot pose, and weight;

receiving sparse sensor data from a sensor system;

synchronizing the received sensor data with a change in robot pose;

accumulating the synchronized sensor data over time in non-transitory memory;

determining a localization quality of the robot comprising:

computing an instantaneous localization;

receiving the instantaneous localization through a fast low-pass filter;

receiving the instantaneous localization through a slow low-pass filter; and

receiving the instantaneous localization through a leaky integrator; and

when the accumulated sensor data exceeds a threshold accumulation and the robot localization quality is greater than a threshold localization quality, updating particles of the particle model with accumulated synchronized sensor data;

determining a weight for each updated particle of the particle model; and

setting a robot pose belief to the robot pose of the particle having the highest weight when a mean weight of the particles is greater than a threshold particle weight.

27. A computer program product encoded on a non-transitory computer readable storage medium comprising instructions that when executed by a data processing apparatus cause the data processing apparatus to perform operations of a method comprising:

initializing a robot pose of a mobile robot;

initializing a particle model of a particle filter executing on the data processing apparatus, the particle model having particles, each particle having an associated particle map, robot pose, and weight, the particle map having cells;

receiving sparse sensor data from a sensor system of the robot;

synchronizing the received sensor data with a change in robot pose;

accumulating the synchronized sensor data over time in non-transitory memory;

determining a localization quality of the robot;

when the accumulated sensor data exceeds a threshold accumulation and the robot localization quality is greater than a threshold localization quality, updating each particle of the particle model with the accumulated synchronized sensor data by:

computing a range error as an absolute difference between a measured range of the accumulated sensor data and a predicted range; and

computing a probability of occupancy of an object in each cell of the associated particle map along a ray trace of the accumulated synchronized sensor data based on the range error by:

computing a first occupancy probability assuming detection of an expected object;

computing a second occupancy probability assuming detection of an expected close object of the robot;

computing a third occupancy probability assuming failure to detect an expected close object within a threshold distance of the robot; and

computing a weighted average of the first, second, and third occupancy probabilities;

determining a weight for each updated particle of the particle model; and

setting a robot pose belief to the robot pose of the particle having the highest weight when a mean weight of the particles is greater than a threshold particle weight.

28. The computer program product of claim **27**, wherein the method further comprises sampling the particle model for a particle population.

29. The computer program product of claim **28**, wherein the method further comprises resampling the particle model for the particle population when the robot localization quality is greater than the threshold localization quality.

30. The computer program product of claim **29**, wherein the method further comprises replacing a portion of the particle population with randomly selected particles of the particle model when resampling fails to occur within a threshold sampling time period.

31. The computer program product of claim **29**, wherein the method further comprises replacing a portion of the particle population with particles selected from the particle model based on the accumulated synchronized sensor data when resampling fails to occur within a threshold sampling time period.

32. The computer program product of claim **27**, wherein the method further comprises determining the change in robot pose using odometry received from a drive system of the robot and inertial measurements from an inertial measurement unit of the robot.

33. The computer program product of claim **27**, wherein the sensor data comprises range data and the synchronized sensor data comprises range measurement and bearing pairs.

34. The computer program product of claim **33**, wherein updating particles comprises, for each particle:

updating its particle pose by applying a robot motion model to the accumulated synchronized sensor data, the robot motion model modeling movement of the robot based on odometry and inertial measurements;

updating its particle map by:

executing the ray trace of the accumulated synchronized sensor data; and

applying a range sensor model to the accumulated synchronized sensor data; and

updating its particle weight based on a number of measured ranges of the accumulated synchronized sensor data matching predicted ranges.

35. The computer program product of claim **24**, wherein executing the ray trace comprises, for each range measurement and bearing pair:

receiving the bearing and an existing particle map; and

computing the predicted range.

36. The computer program product of claim **35**, wherein applying the range sensor model comprises:

receiving the measured range; and

receiving the predicted range.

37. The computer program product of claim **36**, wherein applying the range sensor model further comprises only updating particle map cells corresponding to the synchronized sensor data.

38. A computer program product encoded on a non-transitory computer readable storage medium comprising instructions that when executed by a data processing apparatus cause the data processing apparatus to perform operations of a method comprising:

initializing a robot pose of a mobile robot;

initializing a particle model of a particle filter executing on the data processing apparatus, the particle model having particles, each particle having an associated map, robot pose, and weight;

receiving sparse sensor data from a sensor system of the robot;

synchronizing the received sensor data with a change in robot pose;

accumulating the synchronized sensor data over time in non-transitory memory;

determining a localization quality of the robot comprising:

computing an instantaneous localization;

receiving the instantaneous localization through a fast low-pass filter;

receiving the instantaneous localization through a slow low-pass filter; and

receiving the instantaneous localization through a leaky integrator; and

when the accumulated sensor data exceeds a threshold accumulation and the robot localization quality is greater than a threshold localization quality, updating particles of the particle model with accumulated synchronized sensor data;

determining a weight for each updated particle of the particle model; and

setting a robot pose belief to the robot pose of the particle having the highest weight when a mean weight of the particles is greater than a threshold particle weight.

39. A method executed on a controller of an autonomous mobile robot, the method comprising:

initializing a robot pose;

initializing a particle model;

receiving sparse sensor data from a sensor system of the robot;

synchronizing the received sensor data with a change in robot pose;

accumulating the synchronized sensor data over time in non-transitory memory;

determining a localization quality of the robot;

when the localization quality is below a threshold quality:

accessing a good particle from a particle model of a particle filter executing on the controller, the particle model having particles, each particle having an associated particle map, robot pose, and weight, the particle map having cells, wherein the good particle has weight greater than a threshold weight;

generating new particles based on the last known good particle; and

re-populating at least a portion of the particle model with the new particles;

when the accumulated sensor data exceeds a threshold accumulation and the robot localization quality is greater than a threshold localization quality, updating each particle of the particle model with the accumulated synchronized sensor data by:

computing a range error as an absolute difference between a measured range of the accumulated sensor data and a predicted range; and

computing a probability of occupancy of an object in each cell of the associated particle map along a ray trace of the accumulated synchronized sensor data based on the range error by:

computing a first occupancy probability assuming detection of an expected object;

computing a second occupancy probability assuming detection of an expected close object of the robot;

computing a third occupancy probability assuming failure to detect an expected close object within a threshold distance of the robot; and

computing a weighted average of the first, second, and third occupancy probabilities;

determining a weight for each updated particle of the particle model; and

setting a robot pose belief to the robot pose of the particle having the highest weight when a mean weight of the particles is greater than a threshold particle weight.

40. The method of claim **39**, wherein accessing a good particle comprises accessing a last known good particle.

41. The method of claim **39**, further comprising ceasing map building when the localization quality is below the threshold quality.

42. The method of claim **39**, further comprising sampling the particle model for a particle population.

43. The method of claim **42**, further comprising resampling the particle model for the particle population when the robot localization quality is greater than the threshold localization quality.

44. The method of claim **43**, further comprising replacing a portion of the particle population with randomly selected particles of the particle model when resampling fails to occur within a threshold sampling time period.

45. The method of claim **43**, further comprising replacing a portion of the particle population with particles selected from the particle model based on the accumulated synchronized sensor data when resampling fails to occur within a threshold sampling time period.

46. The method of claim **39**, wherein the sensor data comprises range data and the synchronized sensor data comprises range measurement and bearing pairs, and wherein updating particles comprises, for each particle:

updating its particle pose by applying a robot motion model to the accumulated synchronized sensor data, the robot motion model modeling movement of the robot based on odometry and inertial measurements;

updating its particle map by:

executing the ray trace of the accumulated synchronized sensor data; and

applying a range sensor model to the accumulated synchronized sensor data; and

updating its particle weight based on a number of measured ranges of the accumulated synchronized sensor data matching predicted ranges.

47. A method executed on a controller of an autonomous mobile robot, the method comprising:

determining a localization quality of the robot comprising:

computing an instantaneous localization;

receiving the instantaneous localization through a fast low-pass filter;

receiving the instantaneous localization through a slow low-pass filter; and

receiving the instantaneous localization through a leaky integrator; and

when the localization quality is below a threshold quality:

accessing a good particle from a particle model of a particle filter executing on the controller, the particle model having particles, each particle having an associated map, robot pose, and weight, wherein the good particle has weight greater than a threshold weight; and

generating new particles based on the last known good particle; and

re-populating at least a portion of the particle model with the new particles.

* * * * *

UNITED STATES PATENT AND TRADEMARK OFFICE

CERTIFICATE OF CORRECTION

PATENT NO. : 9,020,637 B2
APPLICATION NO. : 13/790643
DATED : April 28, 2015
INVENTOR(S) : Mark Schnittman

It is certified that error appears in the above-identified patent and that said Letters Patent is hereby corrected as shown below:

In the Claims

At column 24, claim 13, line 18, should read **"each particle having an associated particle map"**.

Signed and Sealed this
Eighth Day of September, 2015

Michelle K. Lee

Michelle K. Lee
Director of the United States Patent and Trademark Office