US010728436B2

(12) **United States Patent**
Piekniewski et al.

(10) **Patent No.: US 10,728,436 B2**
(45) **Date of Patent: Jul. 28, 2020**

(54) **OPTICAL DETECTION APPARATUS AND METHODS**

(71) Applicant: **Brain Corporation**, San Diego, CA (US)

(72) Inventors: **Filip Piekniewski**, San Diego, CA (US); **Vadim Polonichko**, San Diego, CA (US); **Eugene Izhikevich**, San Diego, CA (US)

(73) Assignee: **Brain Corporation**, San Diego, CA (US)

(*) Notice: Subject to any disclaimer, the term of this patent is extended or adjusted under 35 U.S.C. 154(b) by 0 days.

(21) Appl. No.: **15/845,891**

(22) Filed: **Dec. 18, 2017**

(65) **Prior Publication Data**

US 2018/0278820 A1 Sep. 27, 2018

Related U.S. Application Data

(63) Continuation of application No. 14/321,736, filed on Jul. 1, 2014, now Pat. No. 9,848,112.

(51) **Int. Cl.**
H04N 5/225 (2006.01)
B60W 30/09 (2012.01)
(Continued)

(52) **U.S. Cl.**
CPC ***H04N 5/2258*** (2013.01); ***B60W 30/09*** (2013.01); ***B60W 30/14*** (2013.01); ***B60W 30/16*** (2013.01); ***G01C 3/08*** (2013.01); ***G02B 5/204*** (2013.01); ***G02B 7/38*** (2013.01); ***G02B 13/0015*** (2013.01); ***G02B 27/0075*** (2013.01);
(Continued)

(58) **Field of Classification Search**
CPC H04N 5/225; H04N 5/2258; B60W 30/08; B60W 30/09; B60W 30/14; B60W 30/16; B60W 30/17; G01B 11/0026; G01B 11/0691; G01C 3/00–32; G02B 3/36; G02B 3/38; G06K 9/00664;
(Continued)

(56) **References Cited**

U.S. PATENT DOCUMENTS

7,016,783 B2 * 3/2006 Hac B60K 31/0008 701/301
7,113,867 B1 * 9/2006 Stein G06K 9/00805
(Continued)

Primary Examiner — Lin Ye
Assistant Examiner — Chriss S Yoder, III
(74) *Attorney, Agent, or Firm* — Reed Smith LLP; Sidharth Kapoor

(57) **ABSTRACT**

An optical object detection apparatus and associated methods. The apparatus may comprise a lens (e.g., fixed-focal length wide aperture lens) and an image sensor. The fixed focal length of the lens may correspond to a depth of field area in front of the lens. When an object enters the depth of field area (e.g., sue to a relative motion between the object and the lens) the object representation on the image sensor plane may be in-focus. Objects outside the depth of field area may be out of focus. In-focus representations of objects may be characterized by a greater contrast parameter compared to out of focus representations. One or more images provided by the detection apparatus may be analyzed in order to determine useful information (e.g., an image contrast parameter) of a given image. Based on the image contrast meeting one or more criteria, a detection indication may be produced.

18 Claims, 11 Drawing Sheets

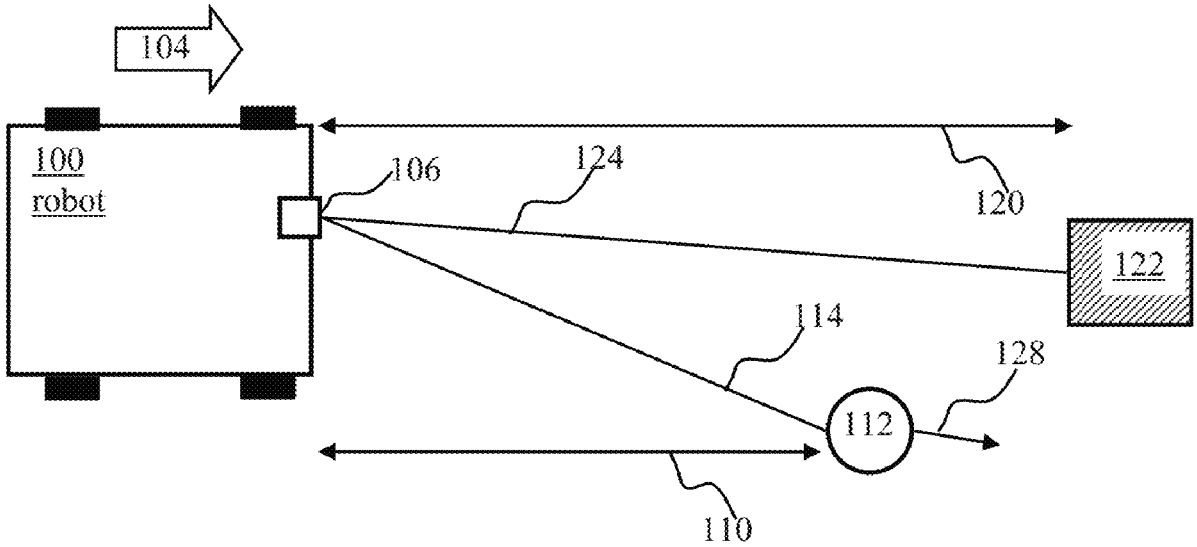

(51) **Int. Cl.**

B60W 30/16	(2020.01)
G06K 9/00	(2006.01)
G02B 5/20	(2006.01)
G02B 13/00	(2006.01)
G02B 27/00	(2006.01)
B60W 30/14	(2006.01)
G01C 3/08	(2006.01)
G02B 7/38	(2006.01)
G06K 9/46	(2006.01)
G06K 9/52	(2006.01)
H01L 31/0216	(2014.01)

(52) **U.S. Cl.**
CPC ***G06K 9/00624*** (2013.01); ***G06K 9/00664*** (2013.01); ***G06K 9/00791*** (2013.01); ***G06K 9/00825*** (2013.01); ***G06K 9/4614*** (2013.01); ***G06K 9/522*** (2013.01); ***H01L 31/02162*** (2013.01); ***H04N 5/2253*** (2013.01); ***H05K 999/99*** (2013.01)

(58) **Field of Classification Search**
CPC G06K 9/00791; G06K 9/00825; G06K 9/6215; G06T 7/0051; G06T 7/50–596
See application file for complete search history.

(56) **References Cited**

U.S. PATENT DOCUMENTS

8,108,147	B1 *	1/2012	Blackburn	G08G 1/166 235/454
8,542,875	B2 *	9/2013	Eswara	G06K 9/3233 382/103
9,150,220	B2 *	10/2015	Clarke	B60W 30/00
9,848,112	B2 *	12/2017	Piekniewski	G02B 5/204
2012/0130566	A1 *	5/2012	Anderson	G05D 1/0858 701/16
2014/0379179	A1 *	12/2014	Goossen	G08G 5/02 701/18

* cited by examiner

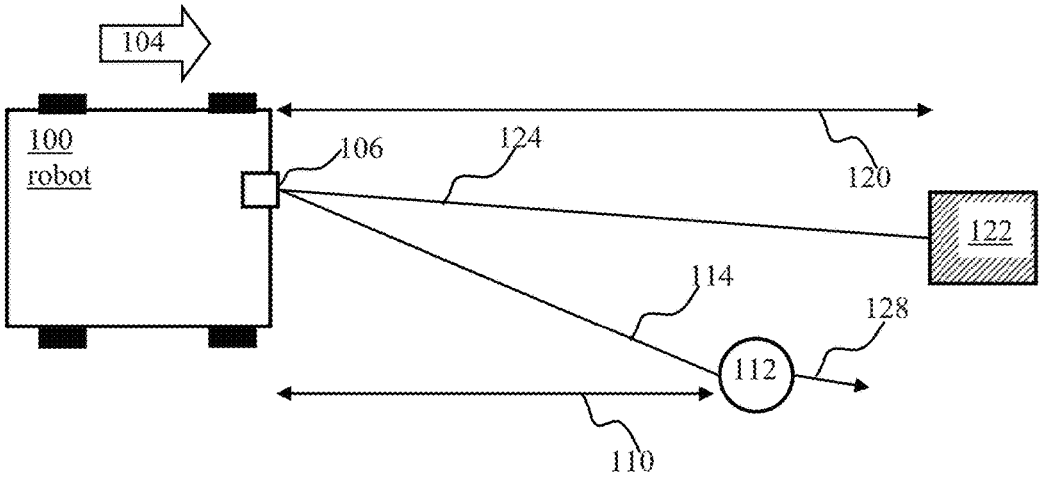
104
100
robot
106
124
120
122
114
128
112
110

FIG. 1

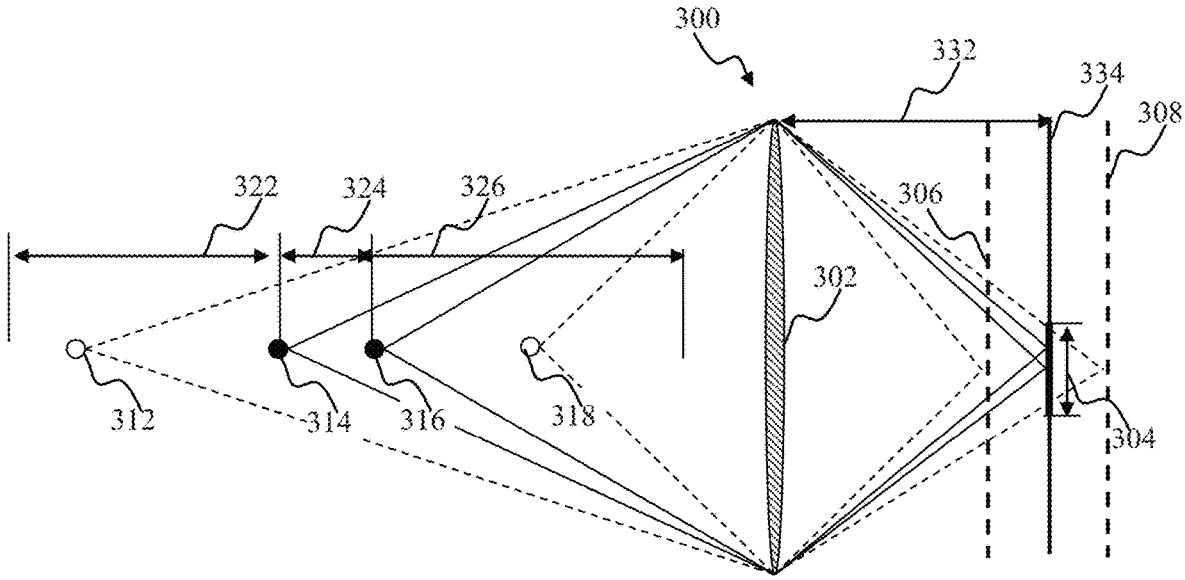
300
332
334
308
322
324
326
306
302
312
314
316
318
304

FIG. 2

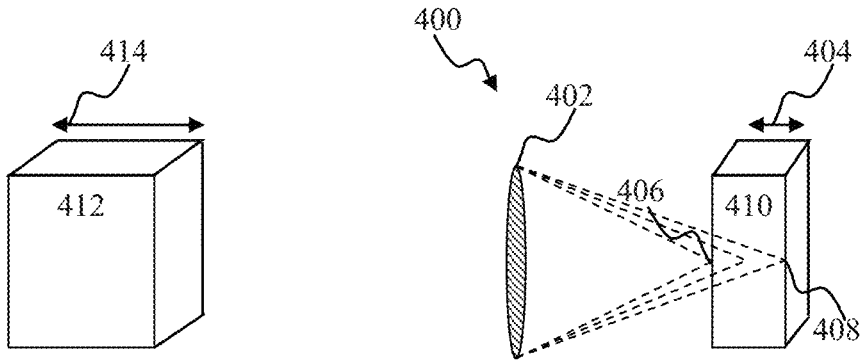

FIG. 3

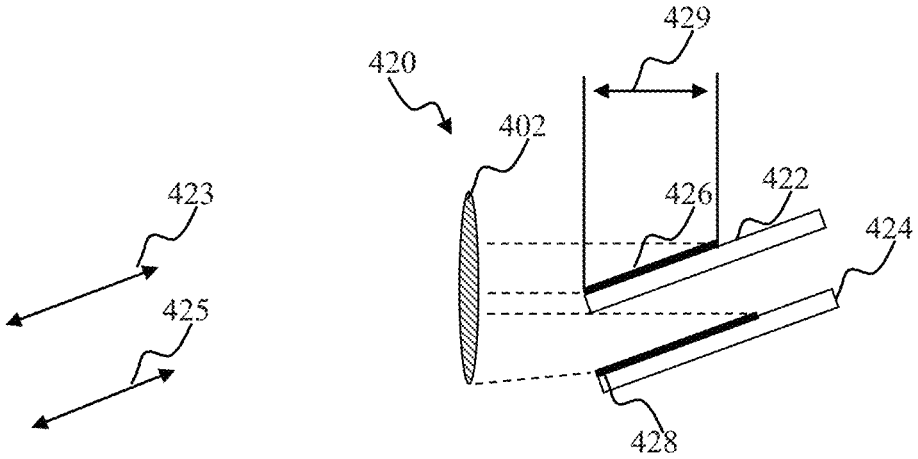

FIG. 4A

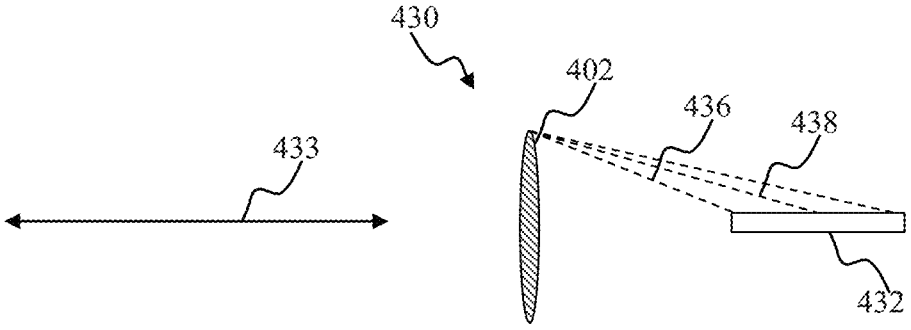

FIG. 4B

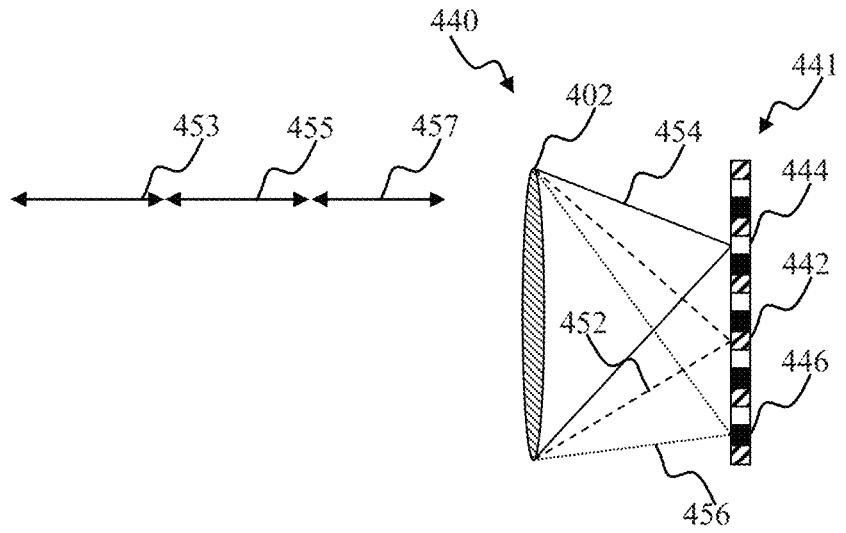
440
441
402
453
455
457
454
444
442
452
446
456

FIG. 4C

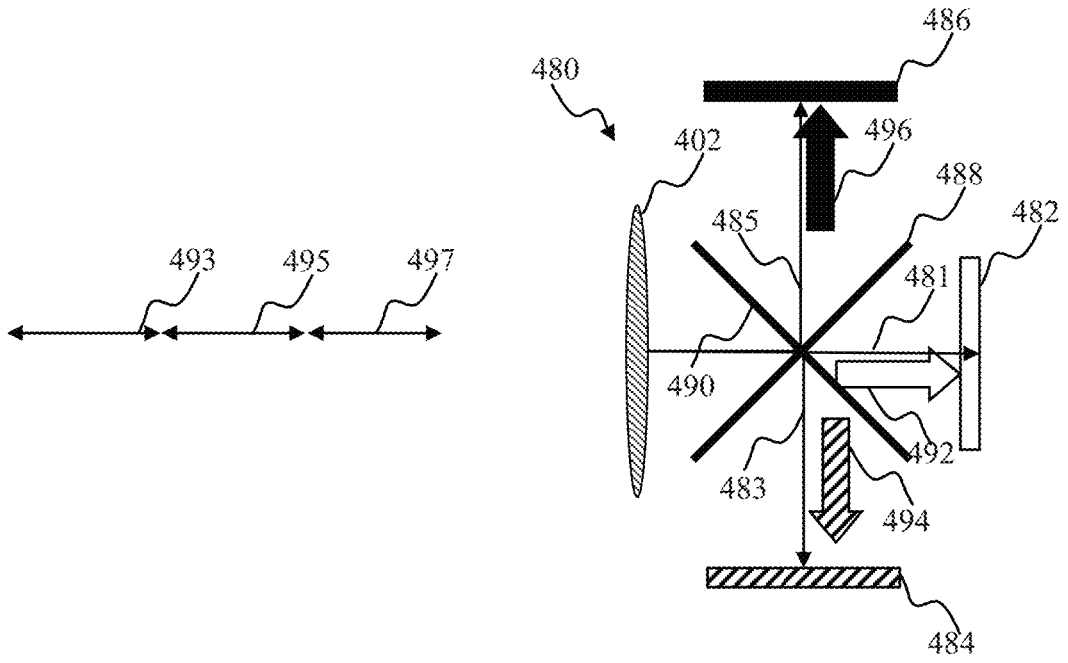
486
480
496
402
488
485
482
493
495
497
481
490
492
483
494
484

FIG. 4D

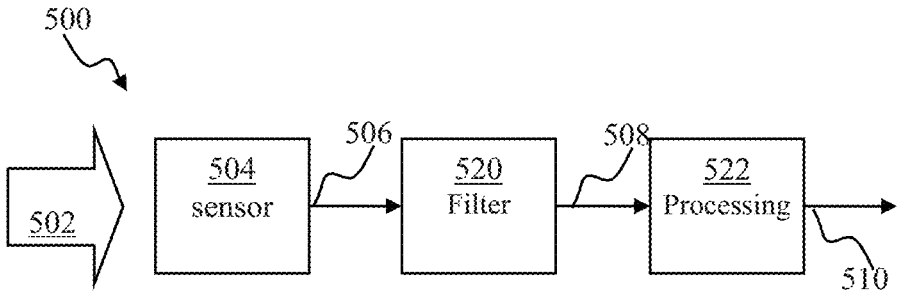
500
502
504
sensor
506
520
Filter
508
522
Processing
510

FIG. 5A

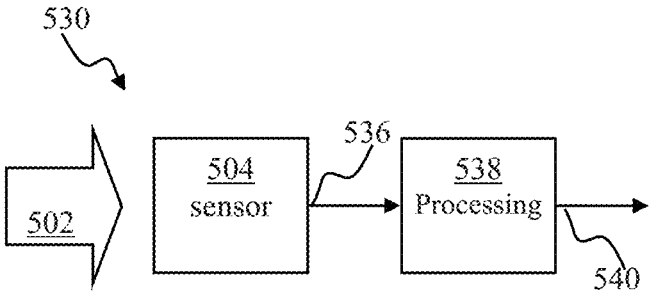
530
502
504
sensor
536
538
Processing
540

FIG. 5B

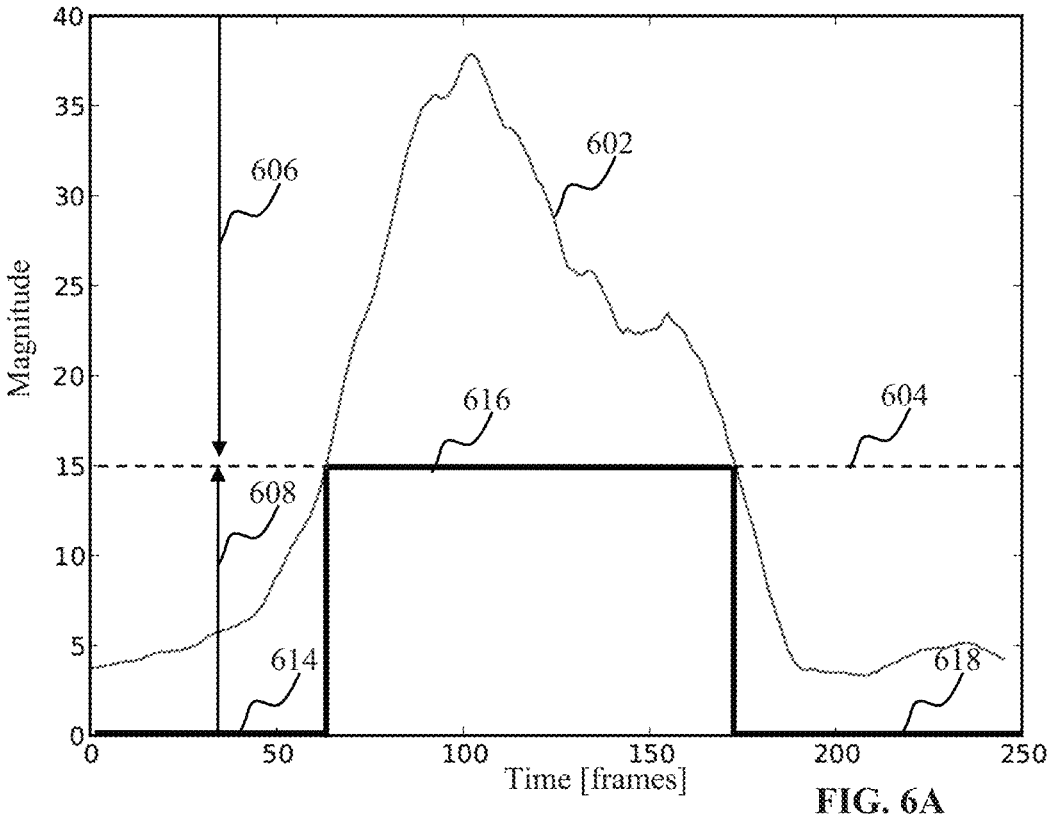
Magnitude
Time [frames]
0
5
10
15
20
25
30
35
40
0
50
100
150
200
250
606
602
616
604
608
614
618

FIG. 6A

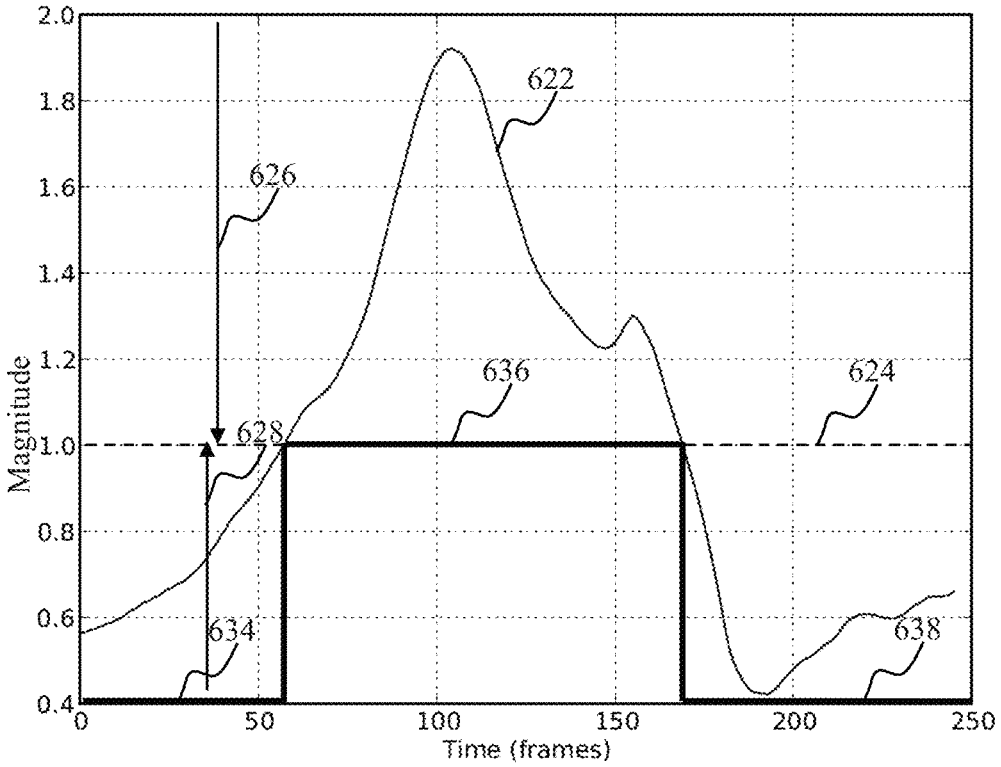
Magnitude
Time (frames)
0.4
0.6
0.8
1.0
1.2
1.4
1.6
1.8
2.0
0
50
100
150
200
250
622
626
636
624
628
634
638

FIG. 6B

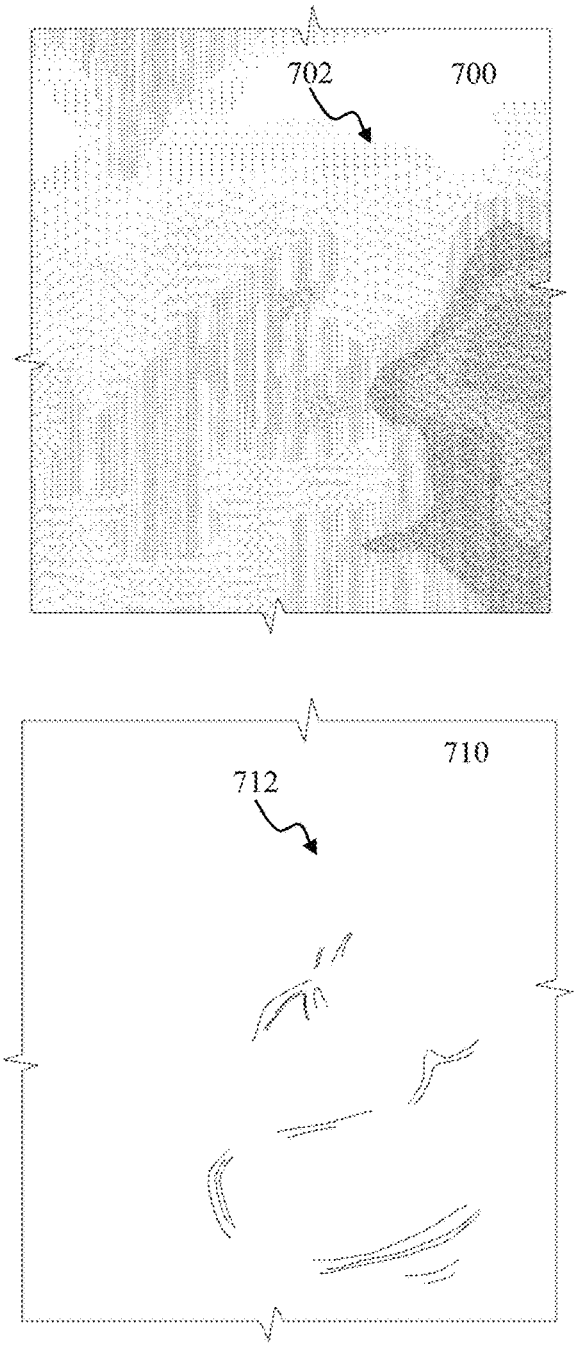

FIG. 7A

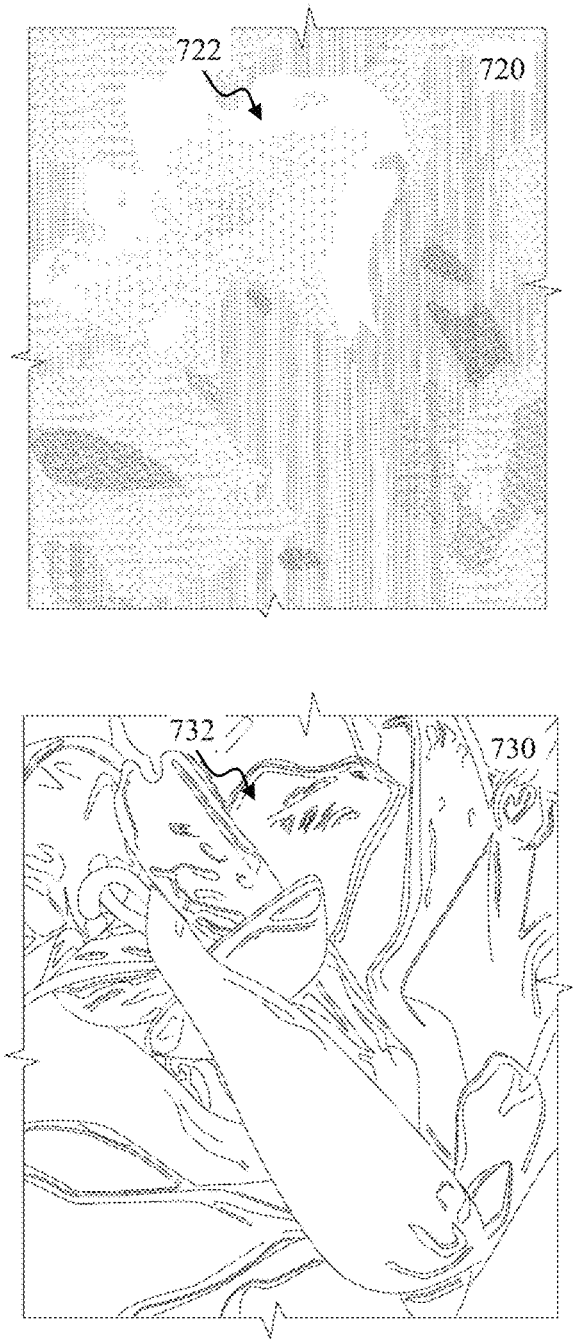

FIG. 7B

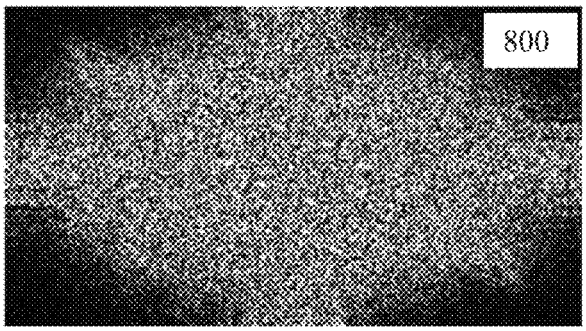

FIG. 8A

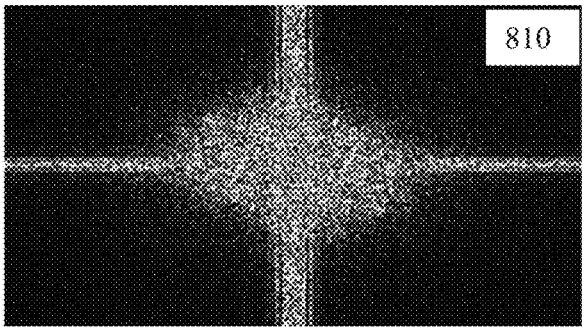

FIG. 8B

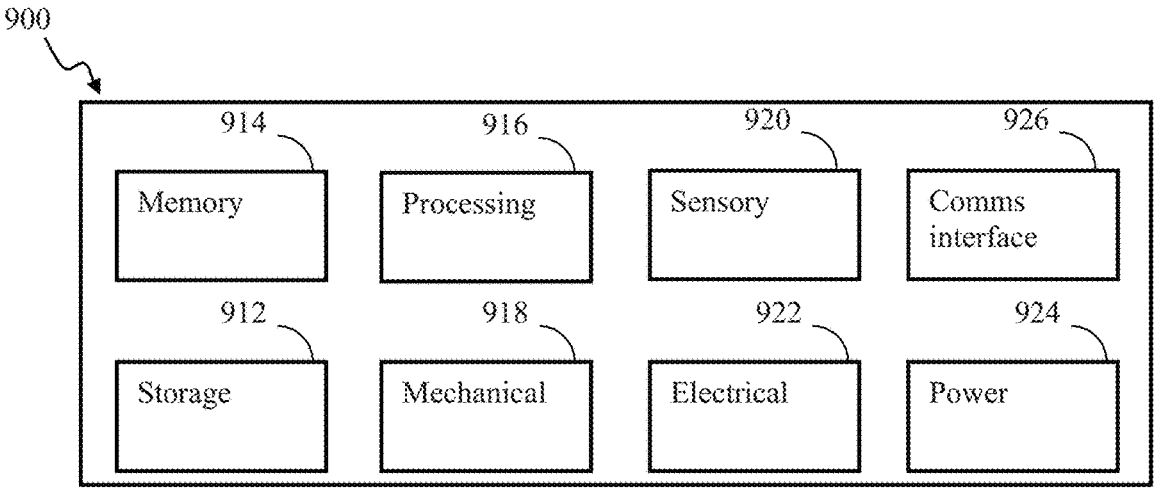

FIG. 9

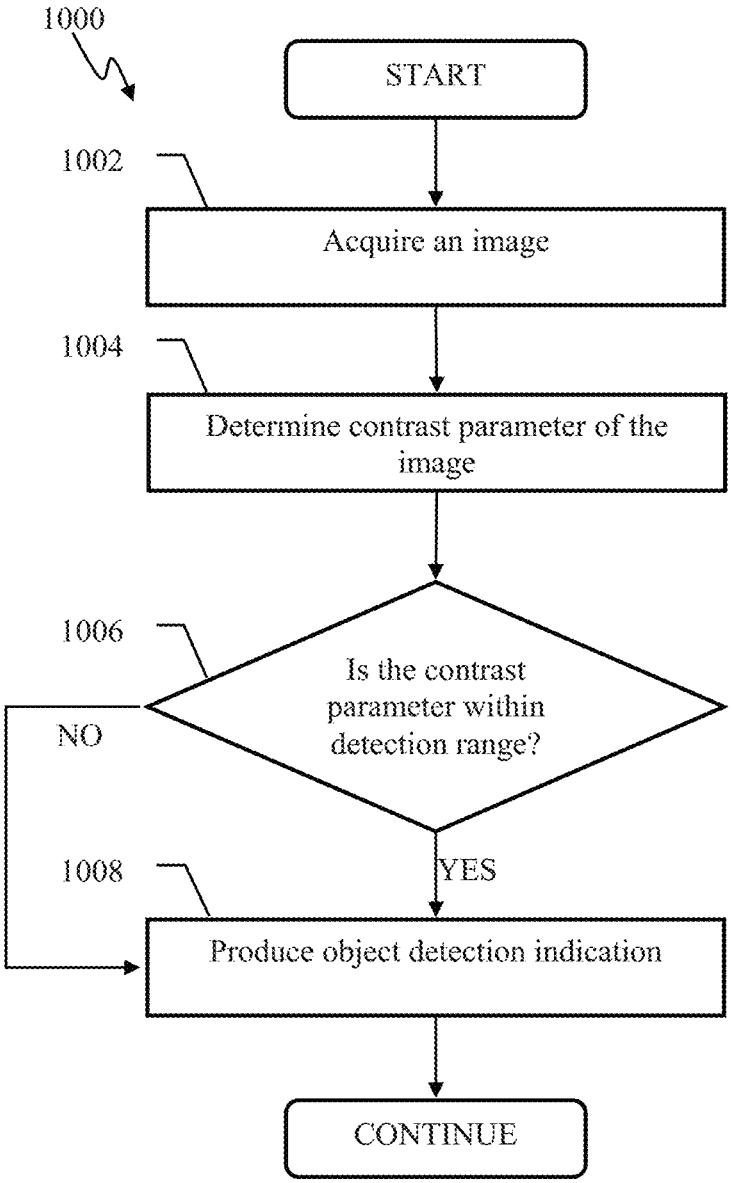
1000
START
1002
Acquire an image
1004
Determine contrast parameter of the image
1006
Is the contrast parameter within detection range?
NO
YES
1008
Produce object detection indication
CONTINUE

FIG. 10

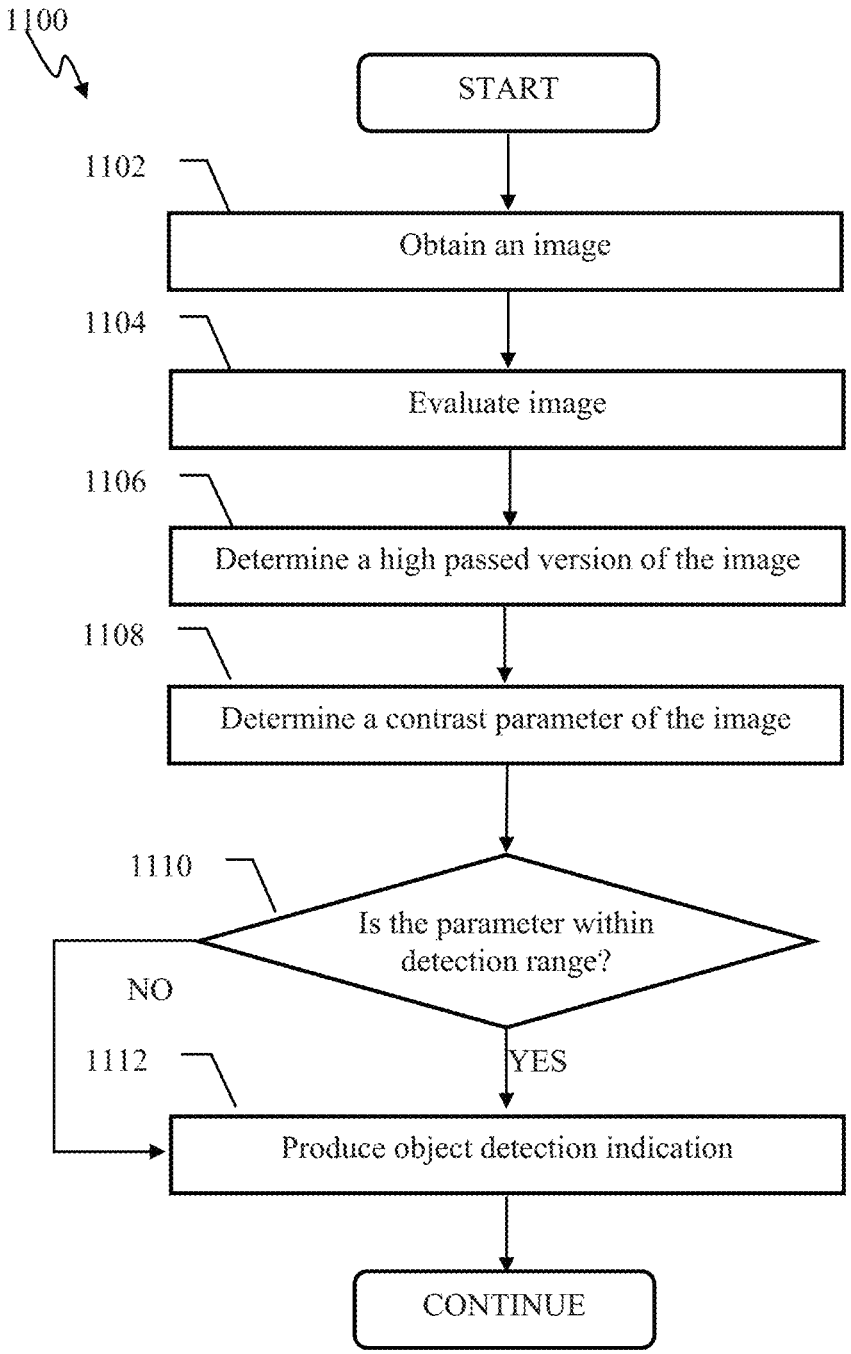
1100
START
1102
Obtain an image
1104
Evaluate image
1106
Determine a high passed version of the image
1108
Determine a contrast parameter of the image
1110
Is the parameter within detection range?
NO
YES
1112
Produce object detection indication
CONTINUE

FIG. 11A

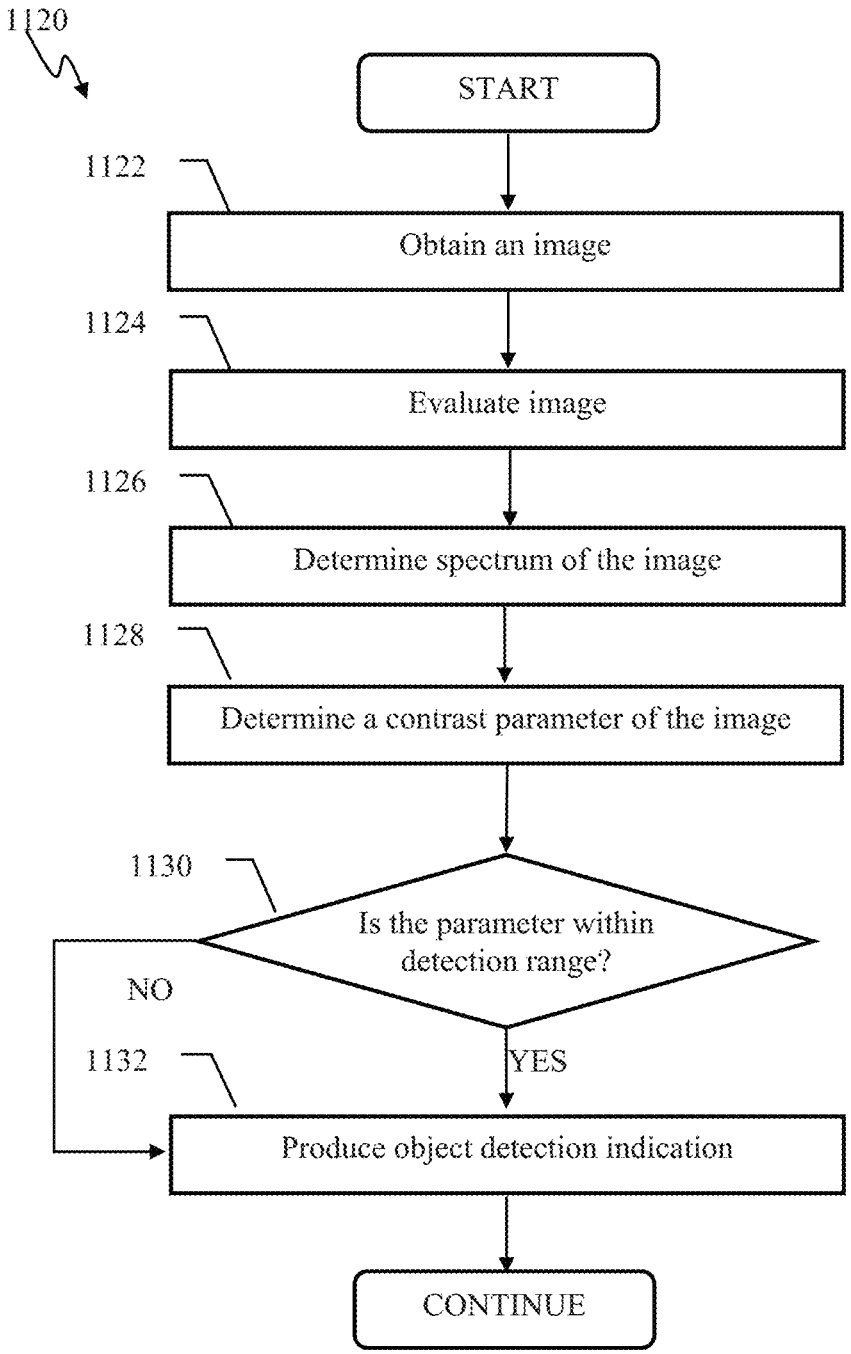
1120
START
1122
Obtain an image
1124
Evaluate image
1126
Determine spectrum of the image
1128
Determine a contrast parameter of the image
1130
Is the parameter within detection range?
NO
YES
1132
Produce object detection indication
CONTINUE

FIG. 11B

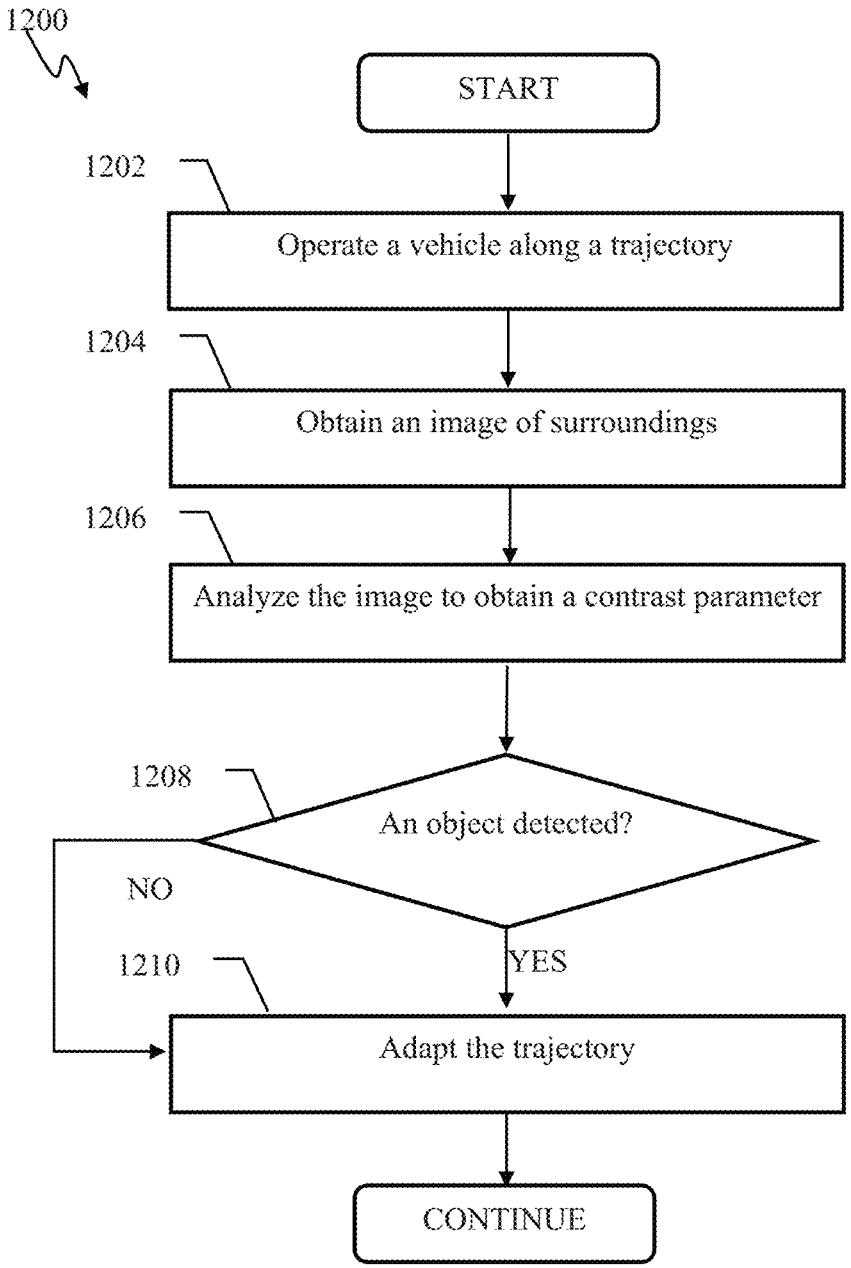
1200
START
1202
Operate a vehicle along a trajectory
1204
Obtain an image of surroundings
1206
Analyze the image to obtain a contrast parameter
1208
An object detected?
NO
YES
1210
Adapt the trajectory
CONTINUE

FIG. 12

OPTICAL DETECTION APPARATUS AND METHODS

This application is a continuation of and claims the benefit of priority to U.S. patent application Ser. No. 14/321,736 filed on Jul. 1, 2014 of the same title, the contents of which being incorporated herein by reference in its entirety.

COPYRIGHT

A portion of the disclosure of this patent document contains material that is subject to copyright protection. The copyright owner has no objection to the facsimile reproduction by anyone of the patent document or the patent disclosure, as it appears in the Patent and Trademark Office patent files or records, but otherwise reserves all copyright rights whatsoever.

BACKGROUND

Field of the Disclosure

The present disclosure relates to, inter alia, computerized apparatus and methods for detecting objects or targets using processing of optical data.

Description of Related Art

Object detection may be required for target approach/obstacle avoidance by autonomous robotic devices. Small sized and/or low-cost robotic vehicles may comprise limited processing and/or energy resources (and/or weight budget) for object detection.

A variety of object detection apparatus (such as IR-based, ultrasonic, and lidar) currently exist, but suffer from various disabilities. Specifically, some existing infrared (IR) optical proximity sensing methods may prove unreliable, particularly when used outdoors and/or in presence of other sources of infrared radiation. Ultrasonic proximity sensors may become unreliable outdoors, particularly on e.g., unmanned aerial vehicles (UAV) comprising multiple motors that may produce acoustic noise. The ultrasonic sensor distance output may also be affected by wind and/or humidity. Lidar based systems are typically costly, heavy, and may require substantial computing resources for processing lidar data.

Therefore there exists a need for an improved object detection sensor apparatus, and associated methods. Specifically, in one application, the improved detection sensor apparatus would be one or more of small sized, inexpensive, reliable, lightweight, power efficient, and/or capable of effective use outdoors.

SUMMARY

The present disclosure satisfies the foregoing need for an improved object detection apparatus and associated methods.

Specifically, one aspect of the disclosure relates to a non-transitory computer-readable storage medium having instructions embodied thereon, the instructions being executable to perform a method of detecting a distance to an object.

Another aspect of the disclosure relates to a non-transitory computer-readable storage medium having instructions embodied thereon, the instructions being executable on a processing apparatus to detect an object in an image. In one implementation, the detection includes: producing a high-pass filtered version of the image, the high-pass filtered version comprising a plurality of pixels; for at least some of the plurality of pixels, determining a deviation parameter between the value of a given pixel and a reference value; and based on the deviation parameter meeting a criterion, providing an indication of the object being present in the image.

In one variant, the high-pass filtered version of the image is configured produced based at least on a first convolution operation between a kernel and the image, the kernel characterized by a kernel dimension; and the convolution operation is configured to reduce energy associated spatial scales in the image that are lower than the kernel dimension. The kernel is configured for example based at least on a second convolution operation of a first matrix, the first matrix configured based at least on a Laplacian operator, and a second matrix configured based at least on a Gaussian operator; and the image is characterized by image dimension, the image dimension exceeding the kernel dimension by at least 10 ten times (10×).

In another variant, the criterion comprises meeting or exceeding a prescribed threshold.

In another aspect of the disclosure, an optical object detection apparatus is disclosed. In one implementation, the apparatus includes: a lens characterized by a depth of field range; an image sensor configured to provide an image comprising one or more pixels; and logic in communication with the image sensor. The logic is configured to in one variant: evaluate at least a portion of the image to determine an image contrast parameter; and produce an object detection indication based on the contrast parameter breaching a threshold meeting one or more criteria, the object indication configured to convey presence of the object within the depth of field range.

In another variant, the image sensor comprises an array of photo-sensitive elements arranged in a plane disposed substantially parallel to the lens; and the image comprises an array of pixels, individual pixels being produced by individual ones of the photo-sensitive elements.

In another aspect, a method of navigating a trajectory by a robotic apparatus is disclosed. In one implementation, the apparatus includes a controller, an actuator and a sensor, and the method includes: obtaining at least one image associated with surroundings of the apparatus using the sensor; analyzing the at least one image to determine a contrast parameter of the image; detecting a presence of an object in the at least one image based at least in part on based on the contrast parameter meeting one or more criteria; and causing the controller to activate the actuator based on the detection of the presence of the object. In one variant, the actuator activation is configured consistent with a characteristic of the object.

In another variant, the robotic device comprises a vehicle; the object comprises one of a target or an obstacle; and the actuator activation is configured to cause the vehicle to perform at least one of a target approach or obstacle avoidance action.

In another implementation, the method includes: obtaining at least one image associated with surroundings of the apparatus using the sensor; analyzing the at least one image to detect a presence of an object in the at least one image; determining that the detected object comprises one of either a target or an obstacle; and causing the controller to selectively activate the actuator based on the determination.

In another aspect of the present disclosure, a method of navigating a robotic apparatus is disclosed. In one embodiment, the robotic apparatus includes a controller, an actuator and a sensor, and the method includes: obtaining, through a

lens, at least one image associated with surroundings of the apparatus using the sensor, the sensor including a plurality of image detectors disposed at an angle with respect to a plane of the lens, each of the plurality of image detectors being associated with an extent located in the surroundings; analyzing the at least one image to detect a presence of one or more objects in the at least one image; during the navigating of the robotic apparatus, detecting a distance to the one or more objects based on the presence of at least one of the one or more objects within the extent located in the surroundings; determining that the detected object includes one of either a target or an obstacle; and causing the controller to selectively activate the actuator based on the determination.

In another aspect of the present disclosure, an apparatus is disclosed. In one embodiment, the apparatus is configured to cause a robotic device to navigate a trajectory, and the apparatus includes a non-transitory computer-readable medium including a plurality of instructions configured to cause the apparatus to, when executed by a processor: obtain an image associated with surroundings of the apparatus using a sensor of the device, the sensor including multiple discrete image sensors behind a single lens associated therewith, each of the multiple discrete image sensors being associated with respective extents located in the surroundings of the apparatus; analyze the image to determine a contrast parameter of the image; detect a presence of an object in the image based at least in part on the contrast parameter meeting one or more criteria; and cause a controller of the device to activate an actuator of the device based on the detection of the presence of the object; wherein the actuator is configured to be activated based on a characteristic of the object; and wherein during the navigation of the trajectory by the robotic device, the apparatus is configured to determine (i) a first distance to the object when the presence of the object produces a first in-focus representation within a first extent of the respective extents and (ii) a second distance to the object when the presence of the object produces a second in-focus representation within a second extent of the respective extents.

These and other objects, features, and characteristics of the system and/or method disclosed herein, as well as the methods of operation and functions of the related elements of structure and the combination of parts and economies of manufacture, will become more apparent upon consideration of the following description and the appended claims with reference to the accompanying drawings, all of which form a part of this specification, wherein like reference numerals designate corresponding parts in the various figures. It is to be expressly understood, however, that the drawings are for the purpose of illustration and description only and are not intended as a definition of the limits of the disclosure. As used in the specification and in the claims, the singular form of "a", "an", and "the" include plural referents unless the context clearly dictates otherwise.

BRIEF DESCRIPTION OF THE DRAWINGS

FIG. **1** is a graphical illustration depicting a top view of robotic apparatus configured for optical distance detection, in accordance with one or more implementations.

FIG. **2** is a diagram illustrating focal configuration of an optical apparatus used for distance detection, according to one or more implementations.

FIG. **3** is a graphical illustration depicting distance detection volume associated with a three-dimensional image detector, according to one or more implementations.

FIG. **4**A is a graphical illustration depicting an object detection apparatus comprising a slanted linear image detector, according to one or more implementations.

FIG. **4**B is a graphical illustration depicting an object detection apparatus comprising a horizontal linear image detector, according to one or more implementations.

FIG. **4**C is a graphical illustration depicting a distance detection apparatus comprising detectors of multiple wavelengths, according to one or more implementations.

FIG. **4**D is a graphical illustration depicting an extended range distance detection apparatus comprising multiple detectors, according to one or more implementations.

FIG. **5**A is a block diagram depicting an exemplary object detection apparatus, according to one or more implementations.

FIG. **5**B is a block diagram depicting an exemplary object detection apparatus, according to one or more implementations.

FIG. **6**A is a plot illustrating output of an optical signal detection apparatus (e.g., the apparatus **500** of FIG. **5**A), according to one or more implementations.

FIG. **6**B is a plot illustrating output of an optical signal detection apparatus (e.g., the apparatus **530** of FIG. **5**B), according to one or more implementations.

FIG. **7**A is a plot illustrating de-focused images obtained with an optical distance detection system, according to one or more implementations.

FIG. **7**B is a plot illustrating in-focus images obtained with an optical distance detection system, according to one or more implementations.

FIG. **8**A is a plot illustrating a power spectrum of a de-focused image obtained with an optical distance detection system, according to one or more implementations.

FIG. **8**B is a plot illustrating a power spectrum of an in-focus image obtained with an optical distance detection system, according to one or more implementations.

FIG. **9** is a functional block diagram illustrating a computerized apparatus for implementing, inter alia, object detection in accordance with one or more implementations.

FIG. **10** is a logical flow diagram illustrating a method of determining a salient feature using encoded video motion information, in accordance with one or more implementations.

FIG. **11**A is a logical flow diagram illustrating a method of image processing useful for object detection by an optical apparatus, in accordance with one or more implementations.

FIG. **11**B is a logical flow diagram illustrating a method of image processing useful for object detection by an optical apparatus, in accordance with one or more implementations.

FIG. **12** is a logical flow diagram illustrating a method of executing an action by a robotic vehicle, the action execution configured based on an outcome of object detection methodology of the disclosure, in accordance with one or more implementations.

All Figures disclosed herein are © Copyright 2014 Brain Corporation. All rights reserved.

DETAILED DESCRIPTION

Implementations of the present disclosure will now be described in detail with reference to the drawings, which are provided as illustrative examples so as to enable those skilled in the art to practice the present technology. Notably, the figures and examples below are not meant to limit the scope of the present disclosure to a single implementation, but other implementations are possible by way of interchange of or combination with some or all of the described

or illustrated elements. Wherever convenient, the same reference numbers will be used throughout the drawings to refer to same or like parts.

Although the system(s) and/or method(s) of this disclosure have been described in detail for the purpose of illustration based on what is currently considered to be the most practical and preferred implementations, it is to be understood that such detail is solely for that purpose and that the disclosure is not limited to the disclosed implementations, but, on the contrary, is intended to cover modifications and equivalent arrangements that are within the spirit and scope of the appended claims. For example, it is to be understood that the present disclosure contemplates that, to the extent possible, one or more features of any implementation may be combined with one or more features of any other implementation

In the present disclosure, an implementation showing a singular component should not be considered limiting; rather, the disclosure is intended to encompass other implementations including a plurality of the same component, and vice-versa, unless explicitly stated otherwise herein.

Further, the present disclosure encompasses present and future known equivalents to the components referred to herein by way of illustration.

As used herein, the term "bus" is meant generally to denote all types of interconnection or communication architecture that is used to access the synaptic and neuron memory. The "bus" could be optical, wireless, infrared or another type of communication medium. The exact topology of the bus could be for example standard "bus", hierarchical bus, network-on-chip, address-event-representation (AER) connection, or other type of communication topology used for accessing, e.g., different memories in pulse-based system.

As used herein, the terms "computer", "computing device", and "computerized device", include, but are not limited to, personal computers (PCs) and minicomputers, whether desktop, laptop, or otherwise, mainframe computers, workstations, servers, personal digital assistants (PDAs), handheld computers, embedded computers, programmable logic device, personal communicators, tablet or "phablet" computers, portable navigation aids, J2ME equipped devices, smart TVs, cellular telephones, smart phones, personal integrated communication or entertainment devices, or literally any other device capable of executing a set of instructions and processing an incoming data signal.

As used herein, the term "computer program" or "software" is meant to include any sequence or human or machine cognizable steps which perform a function. Such program may be rendered in virtually any programming language or environment including, for example, C/C++, C #, Fortran, COBOL, MATLAB™, PASCAL, Python, assembly language, markup languages (e.g., HTML, SGML, XML, VoXML), and the like, as well as object-oriented environments such as the Common Object Request Broker Architecture (CORBA), Java™ (including J2ME, Java Beans), Binary Runtime Environment (e.g., BREW), and other languages.

As used herein, the terms "connection", "link", "synaptic channel", "transmission channel", "delay line", are meant generally to denote a causal link between any two or more entities (whether physical or logical/virtual), which enables information exchange between the entities.

As used herein the term feature may refer to a representation of an object edge, determined by change in color, luminance, brightness, transparency, texture, and/or curvature. The object features may comprise, inter alia, individual edges, intersections of edges (such as corners), orifices, and/or curvature

As used herein, the term "memory" includes any type of integrated circuit or other storage device adapted for storing digital data including, without limitation, ROM. PROM, EEPROM, DRAM, Mobile DRAM, SDRAM, DDR/2 SDRAM, EDO/FPMS, RLDRAM, SRAM, "flash" memory (e.g., NAND/NOR), memristor memory, and PSRAM.

As used herein, the terms "processor", "microprocessor" and "digital processor" are meant generally to include all types of digital processing devices including, without limitation, digital signal processors (DSPs), reduced instruction set computers (RISC), general-purpose (CISC) processors, microprocessors, gate arrays (e.g., field programmable gate arrays (FPGAs)), PLDs, reconfigurable computer fabrics (RCFs), array processors, secure microprocessors, and application-specific integrated circuits (ASICs). Such digital processors may be contained on a single unitary IC die, or distributed across multiple components.

As used herein, the term "network interface" refers to any signal, data, or software interface with a component, network or process including, without limitation, those of the FireWire (e.g., FW400, FW800, and/or other FireWire implementation.), USB (e.g., USB2), Ethernet (e.g., 10/100, 10/100/1000, Gigabit Ethernet, 10-Gig-E), MoCA, Coaxsys (e.g., TVnet™), radio frequency tuner (e.g., in-band or OOB, cable modem), Wi-Fi (802.11), WiMAX (802.16), PAN (e.g., 802.15), cellular (e.g., 3G, LTE/LTE-A/TD-LTE, GSM, and/or other cellular interface implementation) or IrDA families.

As used herein, the term "Wi-Fi" refers to, without limitation, any of the variants of IEEE-Std. 802.11 or related standards including 802.11 a/b/g/n/s/v and 802.11-2012.

As used herein, the term "wireless" means any wireless signal, data, communication, or other interface including without limitation Wi-Fi, Bluetooth, 3G (3GPP/3GPP2), HSDPA/HSUPA, TDMA, CDMA (e.g., IS-95A, WCDMA, and/or other wireless interface implementation.), FHSS, DSSS, GSM, PAN/802.15, WiMAX (802.16), 802.20, narrowband/FDMA, OFDM, PCS/DCS, LTE/LTE-A/TD-LTE, analog cellular, CDPD, RFID or NFC (e.g., EPC Global Gen. 2, ISO 14443, ISO 18000-3), satellite systems, millimeter wave or microwave systems, acoustic, and infrared (e.g., IrDA).

The present disclosure provides, among other things, apparatus and methods for detecting objects at a given distance from a moving device (such as e.g., a robotic device) in real time.

An optical distance/detection apparatus may comprise sensory apparatus, such as a camera comprising an imaging sensor with a lens configured to project a representation of a visual scene onto the imaging sensor. For a given lens, objects at different distances in front the lens may appear to focused at different ranges behind the lens. The lens may be characterized by a range of sharp focus (also referred to as depth of field). For a given range between the image sensor and the lens, one or more objects present within the range of focus may produce in-focus images. Objects disposed outside the range of focus may produce smeared (or out of focus) images. In-focus representations of objects may be characterized by a greater contrast parameter compared to out-of-focus representations. One or more images provided by the detection apparatus may be analyzed in order to determine image contrast parameter of a given image. Based

on one or more criteria (e.g., the image contrast breaching a threshold), an object detection indication may be produced by the apparatus.

When operated from a moving vehicle or device (e.g., a car, an aerial vehicle) the image on the detector may gradually get sharper as the vehicle approaches an object. Upon breaching a given contrast (given sharpness) threshold, the detection apparatus may produce an indication conveying presence of an object within the range of focus in front of the lens.

FIG. **1** depicts a top view of mobile robotic apparatus comprising an optical object detection device configured for object detection in accordance with some implementations. The apparatus **100** may comprise for instance a robotic car, an unmanned aerial vehicle, and/or other apparatus configured to move in space in one or more dimensions. The apparatus **100** may comprise the optical object detection device **106**. The apparatus **100** may navigate in a direction **104**. One or more objects may be present in front of the apparatus **100**, e.g., a ball **112** and a box **122**, disposed at distance **110**, **120**, respectively, from the apparatus **100**. The object detection device **106** may be configured to detect the presence of one or more objects (e.g., **112**, **122**) during, for example trajectory navigation by the apparatus **100** using the methodology of the disclosure.

FIG. **2** illustrates a configuration of an optical apparatus used for object detection, according to one or more implementations. The apparatus **300** of FIG. **2**, may comprise a lens **302** characterized by a focal length **332**. A portion of the space to the left of the lens **302** in FIG. **2** may be referred to as the front (e.g., object space). A lens may be characterized by a relative aperture (also referred to as the f-number and/or focal number and defined as a ratio of lens focal length (e.g., element **332** in FIG. **2**) to the diameter of the lens entrance pupil).

The apparatus **300** may comprise an image sensor disposed behind the lens **304**. In some implementations, the sensor may be located at a fixed distance from the lens, e.g., in the focal plane **334** of the lens **302**.

The lens **302** may be characterized by an area of acceptable contrast which also may be referred to as a circle of confusion (CoC). In optics, a circle of confusion may correspond to a region in a plane of the detector formed by a cone of light rays from a lens that may not coming to a perfect focus when imaging a point source. The area of acceptable contrast may also be termed to as disk of confusion, circle of indistinctness, blur circle, or region. The area of acceptable contrast of the lens **302** (denoted by bold segment in FIG. **2**) of extent **304** may correspond to an extent of acceptably sharp focus **324** in front of the lens **302**. In some implementations, the dimension (e.g., vertical in FIG. **2**) of the acceptable contrast **304** may be configured based on, for example, one or more criteria such as an acceptable difference in brightness between (i) pixels corresponding to the light rays falling onto the detector within the area **304**, and (ii) pixels corresponding the light rays falling onto the focal plane outside the area **304**. The magnitude of the pixel brightness difference may be configured in accordance with parameters of a particular application (e.g., object distance, size, shape, image resolution, acquisition time and/or other parameters). In some implementations of object detection from an aerial vehicle for example, the magnitude of the pixel brightness difference may be selected between 10% and 20%.

In some implementations of still or video image processing, dimension of the circle of confusion may be determined based on a size of the largest blur spot that may still be perceived by the processing apparatus as a point. In some photography implementations wherein the detector may comprise a human eye, a person with a good vision may be able to distinguish an image resolution of 5 line pairs per millimeter (lp/mm) at 0.25 m, which corresponds to CoC of 0.2 mm.

In one or more implementations of computerized detectors, the DOF dimension may be determined as

$$R \sim 1/dc,\ dc \sim d/dr/Rv \qquad \text{(Eqn. 1)}$$

where:

d is the viewing distance, dr is the minimum detectable resolution at a reference viewing distance, Rv—is the reference viewing distance.

For a given detector size and/or location, and sharpness threshold, the dimension **304** of the area of acceptable contrast may increase with an increasing f-number of the lens **302**. By way of an illustration, the circle of confusion of a lens with f-number of 1.4 (f/1.4) will be twice that of the f/2.8 lens. Dimension of the area of acceptably sharp focus **324** in FIG. **2** (also referred to as the depth of field (DOF)) may be inversely proportional to the dimension **304** of the area of acceptable contrast and the lens f-number. In the above example, the DOF of the f/1.4 lens will be half that of the f/2.8 lens.

A plurality of objects (denoted by circles **312**, **314**, **316**, **318** in FIG. **2**) may be present in front of the lens **302**. Axial extents denoted by arrows **322** and **326** in FIG. **2** may be referred to as out-of-focus portions, while the extent **324** may be referred to as the in-focus portion of the space in front of the lens. Objects that may be present within the DOF (e.g., the objects **314**, **316** shown by solid circles in FIG. **2**) produce in-focus image representations in the focal plane **334**. Objects that may be present outside the DOF (e.g., the objects **312**, **318** shown by open circles in FIG. **2**) produce out-of-focus image representations in the focal plane **334**. By way of an illustration, the object **312** may produce an out of focus image at the detector plane **334**, the object **314** may produce an in-focus image at the detector plane **334**.

In some implementations, a lens with a lower relative aperture (smaller f number) may be capable of producing a shallower depth of field (e.g., **324** in FIG. **2**). An optical detection apparatus characterized by a shallow depth of field may reduce uncertainty associated with detecting objects using image contrast methodology described herein. A detection system **300** characterized by a shallower area of acceptably sharp focus may be used to achieve reliable detection (e.g., characterized by a lower rate of false positives) compared to a detection system characterized by a deeper area of acceptably sharp focus. In some implementations of object detection from a moving platform and/or detection of moving objects, a detection system characterized by the shallower DOF may be operated at an increased temporal resolution (compared to the deeper DOF system) in order to detect objects that may pass through the area of acceptably sharp focus.

In some implementations, e.g., such as illustrated in FIG. **1**, the apparatus **200** may be disposed on a moving platform. As the platform approaches an object (e.g., **122** in FIG. **1**) being present in the out-of focus area **322**, the object, when at location **312** in FIG. **2**, may produce an out of focus representation in the image. When the object becomes located within the apparatus **300** DOF (e.g., the location **314**, and/or **316** of the extent **324** or there between), it may produce an in-focus representation. The in-focus representation may be characterized by one or more changes, such as e.g., an increased contrast as compared to the output focus

representations. In such a case, analysis of the image contrast may be utilized in order to determine the presence of one or more objects in the image, e.g., as described below with respect to FIGS. **6**-**8**B.

In some implementations, the contrast determination process may comprise one or more computer-implemented mathematical operations, including down-sampling the image produced by the detector; performing a high-pass filter operation on the acquired image; and/or determining a deviation parameter of pixels within the high-pass filtered image relative a reference value. FIG. **3** depicting an exemplary distance detection apparatus **400** comprising a three-dimensional image detector, according to one or more implementations. The apparatus **400** may comprise for instance a lens **402**, and a three dimensional image sensor **410**. The image sensor may comprise a charge-coupled device (CCD), CMOS device, an active-pixel sensor (APS), photodiode array, and/or other sensor technology. The image sensor may be configured to provide two-dimensional (e.g. X-Y) matrices of a pixel intensity values refreshed at, e.g., a 25 Hz or other suitable frame rate. In one or more implementations, the image sensor may operate at a single wavelength, or at multiple wavelengths. It will be appreciated that while many applications of the apparatus **400** may be configured to operate within the visual band of wavelengths, the present disclosure contemplates use of other wavelengths of electromagnetic energy including, without limitation, those in IR, microwave, x-ray, and/or gamma-ray bands, or combinations of the foregoing. A given pixel may be characterized by one or more values, e.g., corresponding to individual wavelengths (R, G, B), and/or exposure. Individual values may be characterized by bit depth (e.g., comprising 8, 12, 16, or other number of bits). It will be appreciated by those skilled in the art when given this disclosure that the above-referenced image parameters are merely exemplary, and many other image representations (e.g., bitmap, luminance-chrominance (YUV, YCbCr), grayscale, and/or other image representations) are equally applicable to and useful with the various aspects of the present disclosure. Furthermore, data frames corresponding to other (non-visual) signal modalities such as infrared (IR), ultraviolet (UV) images may be compatible with the processing methodology of the disclosure, or yet other configurations.

The image sensor **410** may comprise one or more sensing layers arranged along dimension shown by arrow **404**. Individual layers (not shown) may comprise a plurality of photo sensitive elements (photosites) configured to produce arrays of pixels. Individual sensing layers may be configured partially translucent so as to permit light delivered by the lens **402** propagation through a prior layer (with respect to the lens) to subsequent layer(s). Axial displacement of individual layers (e.g., along dimension **404**) may produce an axial distribution of focal planes./Light rays propagating through the lens **402** at different angles may be focused at different locations, as shown by broken lines **406**, **408** in FIG. **3**. Spatial separation of multiples focal planes may enable detection of objects disposed within the extent **412** in front of the lens. Objects disposed at different ranges **414** from the lens within the extent **410** may produce in focus images at a respective focal plane of the image sensor **410**. In some implementations, the apparatus **400** may be used to provide distance to the detected object.

FIG. **4**A illustrates an object detection apparatus comprising a slanted linear image detector, according to one or more implementations. The apparatus **420** of FIG. **4**A may comprise a lens **402**, and one or more image sensors **422**, **424**. Individual image sensors **422**, **424** may comprise a linear array of photosites disposed at an angle with respect to the plane of the lens **402**. Configuring the image sensor **422**, **424** at an angle with respect to the lens **402** may enable the apparatus **420** to produce one or more areas of focus **426**, **428**. Areas of focus may be characterized by an axial horizontal extent, e.g., element **429** of the area **426** in FIG. **4**A. Slanted areas of focus may correspond to multiple in-focus extents to the left of the lens **402**, e.g. shown by arrows **423**, **425**. Objects occurring within the one or more extents **423**, **425** may produce an in-focus representation on the respective sensor. Use of one or more slanted image sensors may enable the apparatus **420** to detect objects at multiple locations that differ by distance from the lens plane and the cross axis position. In some implementations, detection of objects at multiple distances may enable a robotic vehicle to determine as to whether obtain information if its approaching an object (or if it is approached by an object) and undertake a relevant action (e.g. avoid an obstacle and/or move away from a trajectory of another object). In one or more implementations, the detection apparatus **420** may be employed to determine shape and/or aspect ratio of an object. By way of an illustration, number and/or location of activated slant sensors (e.g., **422**, **424**) of the slant array may convey information about object's location, orientation and/or shape.

FIG. **4**B illustrates an object detection apparatus comprising a horizontal linear image detector, according to one or more implementations. The apparatus **430** of FIG. **4**B may comprise a lens **402**, and an image sensor **432** comprising a linear array of photosites disposed along axial direction of the lens **402**. Disposing the image sensor **432** at a right angle with respect to the lens **402** plane may enable the apparatus **430** to produce in-focus images when an object may be present within the in-focus range **433** in front of the lens **402**. When one or more objects may occur within the range **433** at different ranges from the lens, distance to individual objects may be resolved by, in one implementation, analyzing in-focus representations corresponding to light rays **436**, **438** in FIG. **4**B.

FIG. **4**C illustrates a distance detection apparatus comprising an image sensor comprising detectors of multiple wavelengths, according to one or more implementations. The apparatus **440** of FIG. **4**C may comprise a lens **402**, and an image sensor **441**. The image sensor **441** may comprise a linear array of photosites disposed along focal plane direction (vertical in FIG. **4**C) of the lens **402**. The photosite array may comprise elements configured to respond to light waves of different wavelength. The sensor **441** shown in FIG. **4**C comprises three element types depicted by open, solid, and hashed rectangles denoted **444**, **446**, **442**, respectively. Individual photosites of a given type (e.g., **444**, **446**, **442** in FIG. **4**C) may be configured in an array, thus producing multiple image sensors disposed within the focal plane of the lens **402**.

Due to light dispersion within the lens, light traveling along different paths may focus in different areas behind the lens. Conversely, objects disposed at different distances from the lens may produce in-focus representations at image sensors responding to different light wavelengths. By way of an illustration, light from objects within the distance range **453** may travel along ray paths **454** and produce in focus image on photosite type **444** array. Light from objects within the distance range **455** may travel along ray paths **456** and produce in focus image on photosite type **446** array. Light from objects within the distance range **457** may travel along ray paths **452** and produce in focus image on photosite type **442** array. Accordingly, the optical apparatus comprising one

or more image sensors operating at multiple wavelengths may be capable of providing distance information for objects located at different distance from the lens. Although chromatic aberration is known in the arts, most modern lenses are constructed such as to remove or minimize effects of chromatic aberration. Such achromatic and/or apochromatic lenses may be quite costly, heavy, and/or large compared to simpler lenses with chromatic aberration. The methodology of the present disclosure may enable use of simpler, less costly, and/or more compact lens designs for detecting objects compared to existing approaches.

FIG. **4**D illustrates an extended range distance detection apparatus comprising multiple detectors, according to one or more implementations.

The apparatus **480** of FIG. **4**B may comprise a lens **402**, and multiple image sensors **482**, **484**, **486**. Individual image sensors **482**, **484**, **486** may be configured to respond to light of one or more wavelengths. Individual image sensors **482**, **484**, **486** may be disposed at different optical distances from the lens **402**. In some implementations, such as shown in FIG. **4**D, one or more light deflection components may be used in order to divert a portion of light gathered by the lens into two or more portions. In one or more implementations, the components **488**, **490** may comprise a beam splitter, a polarizing prism, and/or a thin half-silvered mirror (pellicle mirror).

By way of an illustration, a portion of the light from the lens **402** may be diverted by semi-permeable mirror **488** along direction shown by arrow **496** towards the sensor **486** while a portion **492** of light may be passed through towards the sensor **482**. All or a portion of the light from the lens **402** may be diverted by the semi-permeable mirror **490** along direction shown by arrow **494** towards the sensor **484**. A portion **492** of the incident light may be passed through towards the sensor **482**. Cumulative path lengths for light sensed by elements **482**, **484**, **486** may also be configured different from one another. Accordingly, the light traveling along paths denoted by arrows **481**, **483**, **485** may correspond to depth of field regions **493**, **495**, **497** in front of the lens **402** in FIG. **4**D. Optical apparatus comprising multiple image sensors characterized by different light path lengths may be capable of providing detection information for objects located at different distance from the lens.

FIG. **5**A is a block diagram depicting an exemplary object detection apparatus, according to one or more implementations. The apparatus **500** of FIG. **5**A may comprise one or more sensors **504** configured to produce one or more pixels corresponding to sensory input **502**. In one or more implementations, the sensory input may comprise light gathered by a lens. In one or more implementations of optical distance detection, the sensor component **504** may comprise one or more image sensor components, such as e.g., those described above with respect to FIGS. **3**-**4**D.

The sensor **504** may provide output **506** comprising one or more pixels. In some implementations, the output **506** may comprise an array of pixels characterized by one or more channels (e.g., R,G,B) and a bit depth (e.g., 8/12/16 bits).

The output **506** may be high-pass (HP) filtered by the filter component **520**. In some implementations, the filter component **520** may be configured to downsample the input **506**. The filter component **520** operation may comprise a convolution operation with a Laplacian and/or another sharpening kernel, a difference of Gaussian operation configured to reduce low frequency energy, a combination thereof, and/or other operations configured to reduce low frequency energy content. In some implementations, the filter component **520** may be configured as described below with respect to FIG. **6**A.

In some implementations, the output **506** might be cropped prior to further processing (e.g., filtering, and/or transformations). Multiple crops of an image in the output **506** (performed with different cropping setting) may be used. In some implementations crops of the high-passed image may be utilized. In some implementations, the output **506** may be processed using a band-pass filter operation. The band pass filter may comprise a high-pass filtering operation, subsampling, and/or a blurring filter operation. The blurring filter operation on an image may comprise a convolution of a smoothing kernel (e.g., Gaussian, box, circular, and/or other kernel whose Fourier transform has most of energy in a low part of spectrum) with the image.

Filtered output **508** may be provided to a processing component **522** configured to execute a detection process. The detection process may comprise determination of a parameter, quantity, or other value, such as e.g., a contrast parameter. In one or more implementations, the contrast parameter may be configured based on a maximum absolute deviation (MAD) of pixels within the filtered image from a reference value. The reference value may comprise a fixed pre-computed value, an image mean, image median, and/or a value determined using statistics of multiple images. In some implementations, the contrast parameter for a plurality of images value may be low-pass filtered using a running mean, an exponential filter, and/or other filter approach configured to reduce inter-image variability of the detection process, or accomplish some other desirable operation to enhance detection. The averaging window may be configured in accord with requirements of a given application. By way of an illustration, a detection apparatus configured to detect objects in a video acquired at 25 fps from a robotic rover device may utilize averaging window between 2 and 50 frames. It will be appreciated by those skilled in the arts that averaging parameters may be configured based on requirements of an applications, e.g., vehicle speed, motion of objects, object size, and/or other parameters. For autonomous ground vehicle navigation the averaging window may be selected smaller than 2 seconds.

The contrast parameter may be evaluated in light of one or more detection or triggering criteria; e.g., compared to a threshold, and/or analysis of a value produced by the contrast determination process. Responsive to the contrast parameter for a given image breaching the threshold (e.g., **604**, **624** in FIGS. **6**A-**6**B, below), the processing component **522** may produce output **510** indicative of a presence of an object in the sensory input **500**. In one or more implementations, the threshold value may be selected and/or configured dynamically based on, e.g., ambient light conditions, time of day, and/or other parameters. By way of an illustration, the threshold may be configured to provide greater sensitivity at dusk/dawn, and reduce sensitivity during the day and/or increase sensitivity in high light conditions, while reducing sensitivity in low light conditions.

FIG. **5**B illustrates an exemplary object detection apparatus, according to one or more implementations. The apparatus **530** of FIG. **5**B may comprise one or more sensors **504** configured to produce output **536** comprising one or more pixels corresponding to sensory input **502**. In one or more implementations, the sensory input may comprise light gathered by a lens. In one or more implementations of optical distance detection, the sensor component **504** may comprise one or more image sensor components described above with respect to FIGS. **3**-**4**D. The output **536** may

comprise an array of pixels characterized by one or more channels (e.g., R,G,B) and a bit depth (e.g., 8/12/16 bits).

The output **536** may be processed by a processing component **538**. In some implementations, the component **538** may be configured to assess spatial and/or temporal characteristics of the camera component output **536**. In some implementations, the assessment process may comprise determination of a two-dimensional image spectrum using, e.g., a discrete Fourier transform described below with respect to FIG. **6**B. The resultant spectrum may be analyzed to evaluate high-frequency (small scale) energy content. In some implementations, the high frequency energy content determination may comprise a determination of energy parameter (Ehi) associated with energy content in the image spectrum at spatial scales that are lower than 0.5-2/3 of the Nyquist frequency (3-10) pixels.

Responsive to a determination that the high frequency (small spatial scale) energy content in the image meets one or more criteria (e.g., breaches a threshold), the processing component **538** may produce output **540** indicative of a presence of an object in the sensory input **502**. In one or more implementations, the threshold value may be selected and/or configured dynamically based on, e.g., ambient light conditions, time of day, and/or other parameters.

In one or more implementations, the object detection may be effectuated based on a comparison of the Ehi parameter to another energy parameter (El) associated with energy content in the image spectrum at spatial scales that exceed a prescribed number of pixels.

In one or more implementations, processing components **520**, **522**, **524**, **538** may be embodied within one or more integrated circuits, one or more computerized devices, and/or implemented using machine executable instructions (e.g., a software library) executed by one or more processors and/or ASICs.

FIGS. **6**A-**8**B illustrate operation of object detection system of the disclosure configured in accordance with one or more implementations.

One or more images may an acquired using, e.g. a camera component **504** shown and described with respect to FIG. **5**A mounted on a vehicle (e.g., a robotic vehicle **100** such as that shown in FIG. **1**). The vehicle may approach an object (e.g., a flower). FIGS. **7**A-**7**B present two exemplary images acquired with a camera apparatus comprising a lens (e.g., **302** in FIG. **2**) characterized by an exemplary f/1.8 aperture and 35 mm focal length, and an imaging sensor (e.g., **304** in FIG. **2**) characterized by dimensions of 23.1 mm by 15.4 mm. The image sensor may comprise an array of photosites and be characterized by a physical resolution (e.g., 6,016×4,000) of photosites. The image sensor may produce an image comprising an array of pixels. Individual pixels may correspond to signal associated with a given photosite (raw resolution) or a group of photosites (subsampled image). Images provided by the sensor may be down-sampled to e.g., 320 pixels×180 pixels rectangle and converted to greyscale 8-bit representation. Various other resolutions, bit depths and/or image representations may be utilized. The pixels dimension may determine the smallest resolvable spatial scale (e.g., smallest change) in the image. For example, smaller pixels may enable resolving of smaller scales (higher detail) in the image.

Image **700** in FIG. **7**A represents the down-sampled image comprising an out of-focus representation of the object (e.g., the flower), denoted by arrow **702**. Image **720** in FIG. **7**B represents the down-sampled image comprising an in-focus representation **722** of the flower.

The images may be high-pass processed by a filtering operation. The filtering operation may comprise determination of a Gaussian blurred image using a Gaussian kernel. In the implementation illustrated in FIGS. **6**A-**7**B the Gaussian kernel standard deviation is selected equal to 5 pixels in vertical and horizontal dimensions. It may be appreciated by those skilled in the relevant arts that the image acquisition and/or processing parameters (e.g., bit depth, down-sampled image size, Gaussian kernel, and/or other parameters) may be configured in accordance with application requirements; e.g., expected object size, processing and/or energy capacity available for object detection, image sensor size, resolution, frame rate, noise floor, and/or other parameters.

In one or more implementations, the high-passed image Ih may be obtained by subtracting Gaussian blurred image Ig from the original image I, as follows:

$$Ih=I+m-Ig \quad \text{(Eqn.2)}$$

where m denotes an offset value. In some implementations (e.g., such as illustrated in FIGS. **6**A, **7**A-**7**B), the offset m may be selected equal to a middle value of the grayscale brightness level (e.g., 128).

Panels **710**, **740** FIGS. **7**A-**7**B, respectively, depict output of the filtering operation of Eqn. As may be observed in FIG. **7**A, image of panel **710** (corresponding to the out of focus image of panel **700**) is substantially void of high frequency content (e.g., the location **712** corresponding to the representation of the flower does not contain readily discernable feature(s)). As may be observed in FIG. **7**B, the image of panel **740** (corresponding to the in-focus image of panel **720**) comprises a plurality of high frequency features (e.g., the flower representation the location **732** may be readily discerned from the grey background).

In order to obtain a quantitative measure of an object presence in a given image (e.g., **720** in FIG. **7**B), the corresponding high-pass filtered image (e.g., **740** in FIG. **7**B) may be analyzed. The analysis may comprise for instance determination of deviation of pixel values from the mean intensity value within the image (e.g., 128 in some implementations of 8-bit greyscale images). In some implementations, the analysis may comprise determination of a contrast parameter configured based on a maximum of absolute deviation of a pixel value within the image from the image median value. In some implementations, the contrast parameter may be low-pass filtered using a running mean, an exponential filter, and/or other filter approach configured to reduce frame-to-frame variability. The exemplary filtered contrast parameter data shown by curve **602** in FIG. **6**A were obtained using a running mean window of 25 frames in width, although it is appreciated that other values may readily be used consistent with the present disclosure. Temporal filtering may be employed in order to reduce number of false positives generated e.g. by thermal noise on the detector, camera shake, and/or other sources of noise.

The contrast parameter for a given image may be evaluated in light of one or more criteria (e.g., compared to a threshold) in order to determine presence of an object in the associated image. FIG. **6**A illustrates contrast parameter values (curve **602**) obtained for a plurality of images and the corresponding detection output (curve comprising portions **614**, **616**, **618**. Data shown by curve **602** may correspond to output **510** of the component **522** of the detection the apparatus **500** of FIG. **5**A. Data shown by segments **614**, **616**, **618** may correspond to output **512** of the apparatus **500** of FIG. **5**A.

Detection threshold used for determining the presence of an object is shown by broken line **604** in FIG. **6**A. In one or

more implementations, the threshold value **604** may be selected and/or configured dynamically based on, e.g., ambient light conditions, time of day, and/or other parameters. Values of the curve **602** that fall in the range **608** below the threshold **604** may cause a negative detection signal (e.g., equal to zero as shown by the segments **614**, **618** in FIG. **6**A). Values of the curve **602** that fall in the range **606** at and/or above the threshold **604** may cause a positive detection signal (e.g., equal to one as shown by segment **616** in FIG. **6**A).

FIGS. **6**B and **8**A-**8**B illustrate object detection using of spectral approach to image contrast analysis (by, e.g., the apparatus **530** of FIG. **5**B), according to one or more implementations.

The input image (e.g., image **700**, **720**) may be transformed using a Fourier transformation, e.g., discrete Fourier transform (DFT), cosine Fourier transform, a Fast Fourier transform (FFT) or other spatial scale transformation. FIG. **8**A illustrates a power spectrum of the de-focused image shown in panel **700** of FIG. **7**A. FIG. **8**B illustrates a power spectrum of the in-focus image shown in panel **720** of FIG. **7**B.

The image spectra may be partitioned into a low-frequency portion and a high frequency portion. In some implementations, e.g., such as illustrated in FIG. **6**B, the spectral partitioning may be configured based on an elliptical or circular curve area around the origin (e.g., zero frequency point). In some implementations, e.g., shown in FIG. **6**B, the data were obtained using an ellipse with (x,y) axes selected at (37, 65) units of cycles along corresponding axis. Low frequency energy portion Elo may be obtained by determining a sum of power spectral values within the ellipse area. The high frequency energy portion Ehi may be obtained by determining a sum of power spectral values outside the ellipse area.

Detection of an object in a given image may comprise determination of a contrast parameter for a given image. In some implementations, the contrast parameter may be configured based on a comparison of the high frequency energy portion and the low frequency energy portion. In some implementations, the contrast parameter (C) may be determined based on a ratio or other relationship of the high frequency energy portion and the low frequency energy portion, such as the exemplary relationship of Eqn. 2 below.

$$C=Ehi/Elo \quad \text{(Eqn. 2)}$$

The contrast parameter for a given image may be compared to a threshold in order to determine presence of an object in the associated image. FIG. **6**B presents the contrast parameter (curve **622**) for a series of images acquired by an optical object detection device disposed on a moving platform. The thick segments **634**, **636**, **638** in FIG. **6**B depicts the detection output corresponding detection output. Data shown by segments **634**, **636**, **638** may correspond to output **540** of the component **538** of the detection the apparatus **530** of FIG. **5**B.

The detection threshold used for determining the presence of an object is shown by the broken line **624** in FIG. **6**B. In one or more implementations, the threshold value **624** may be selected (e.g., equal one in FIG. **6**B) and/or configured dynamically based on, e.g., ambient light conditions, time of day, and/or other parameters. Values of the contrast parameter of curve **622** that fall in the range **628** below the threshold **624** may cause a negative detection signal (e.g., equal to zero as shown by the segments **634**, **638** in FIG. **6**B). Values of the curve **622** that fall in the range **626** at and/or above the threshold **624** may cause a positive detection signal (e.g., equal to one as shown by segment **636** in FIG. **6**B).

FIG. **9** illustrates a computerized apparatus for implementing, inter alia, object detection in accordance with one or more implementations. The apparatus **900** may comprise a processing module **916** configured to receive sensory input from sensory block **920** (e.g., camera **106** in FIG. **1**). The processing module **916** may be configured to implement signal processing functionality (e.g., object detection).

The apparatus **900** may comprise memory **914** configured to store executable instructions (e.g., operating system and/or application code, raw and/or processed data such as raw image fames, image spectrum, and/or contrast parameter, information related to one or more detected objects, and/or other information).

In some implementations, the processing module **916** may interface with one or more of the mechanical **918**, sensory **920**, electrical **922**, power components **924**, communications interface **926**, and/or other components via driver interfaces, software abstraction layers, and/or other interfacing techniques. Thus, additional processing and memory capacity may be used to support these processes. However, it will be appreciated that these components may be fully controlled by the processing module. The memory and processing capacity may aid in processing code management for the apparatus **900** (e.g. loading, replacement, initial startup and/or other operations). Consistent with the present disclosure, the various components of the device may be remotely disposed from one another, and/or aggregated. For example, the instructions operating the detection process may be executed on a server apparatus that may control the mechanical components via a network or a radio connection. In some implementations, multiple mechanical, sensory, electrical units, and/or other components may be controlled by a single robotic controller via network/radio connectivity.

The mechanical components **918** may include virtually any type of device capable of motion and/or performance of a desired function or task. Examples of such devices may include one or more of motors, servos, pumps, hydraulics, pneumatics, stepper motors, rotational plates, micro-electro-mechanical devices (MEMS), electroactive polymers, shape memory alloy (SMA) activation, and/or other devices. The sensor devices may interface with the processing module, and/or enable physical interaction and/or manipulation of the device.

The sensory component may be configured to provide sensory input to the processing component. In some implementations, the sensory input may comprise camera output images.

The electrical components **922** may include virtually any electrical device for interaction and manipulation of the outside world. Examples of such electrical devices may include one or more of light/radiation generating devices (e.g. LEDs, IR sources, light bulbs, and/or other devices), audio devices, monitors/displays, switches, heaters, coolers, ultrasound transducers, lasers, and/or other electrical devices. These devices may enable a wide array of applications for the apparatus **900** in industrial, hobbyist, building management, medical device, military/intelligence, and/or other fields.

The communications interface may include one or more connections to external computerized devices to allow for, inter alia, management of the apparatus **900**. The connections may include one or more of the wireless or wireline interfaces discussed above, and may include customized or proprietary connections for specific applications. The com-

munications interface may be configured to receive sensory input from an external camera, a user interface (e.g., a headset microphone, a button, a touchpad, and/or other user interface), and/or provide sensory output (e.g., voice commands to a headset, visual feedback, and/or other sensory output).

The power system **924** may be tailored to the needs of the application of the device. For example, for a small hobbyist robot or aid device, a wireless power solution (e.g. battery, solar cell, inductive (contactless) power source, rectification, and/or other wireless power solution) may be appropriate. However, for building management applications, battery backup/direct wall power may be superior, in some implementations. In addition, in some implementations, the power system may be adaptable with respect to the training of the apparatus **900**. Thus, the apparatus **900** may improve its efficiency (to include power consumption efficiency) through learned management techniques specifically tailored to the tasks performed by the apparatus **900**.

FIGS. **10-12** illustrate methods **1000**, **1100**, **1130**, **1200** for determining and using object information from images. The operations of methods **1000**, **1100**, **1130**, **1200** presented below are intended to be illustrative. In some implementations, methods **1000**, **1100**, **1130**, **1200** may be accomplished with one or more additional operations not described, and/or without one or more of the operations discussed. Additionally, the order in which the operations of method **1000**, **1100**, **1130**, **1200** are illustrated in FIGS. **10-12** and described below is not intended to be limiting.

In some implementations, methods **1000**, **1100**, **1130**, **1200** may be implemented in one or more processing devices (e.g., a digital processor, an analog processor, a digital circuit designed to process information, an analog circuit designed to process information, a state machine, and/or other mechanisms for electronically processing information). The one or more processing devices may include one or more devices executing some or all of the operations of methods **1000**, **1100**, **1130**, **1200** in response to instructions stored electronically on an electronic storage medium. The one or more processing devices may include one or more devices configured through hardware, firmware, and/or software to be specifically designed for execution of one or more of the operations of methods **1000**, **1100**, **1200**, **1300**.

FIG. **10** illustrates a method of determining presence of an object in an image using image contrast information in accordance with one or more implementations.

At operation **1002** of method **1000**, one or more input images may be acquired. In one or more implementations, individual images may be provided by an optical apparatus (e.g., **200** of FIG. **2**) comprising a lens and an image sensor (e.g., CCD, CMOS device, and/or APS, photodiode arrays, and/or other image sensors). In some implementations, the input images may comprise a pixel stream downloaded from a file, such as a stream of two-dimensional matrices of red green blue RGB values (e.g., refreshed at a 25 Hz or other suitable frame rate). It will be appreciated by those skilled in the art when given this disclosure that the above-referenced image parameters are merely exemplary, and many other image representations (e.g., bitmap, luminance-chrominance YUV, YCbCr, grayscale, and/other image representations) may be applicable to and useful with the various implementations. The images may form real-time (live) video.

At operation **1004**, image contrast parameter may be determined. In one or more implementations, the contrast parameter determination may be effectuated by a processing apparatus (e.g., the apparatus described with respect to FIGS. **5**A-**5**B) using an image-domain based approach (e.g., such as described with respect to FIG. **6**A), an image spectrum domain based approach (e.g., such as described with respect to FIG. **6**B and/or Eqn. 2), and/or other applicable methodologies. In some implementations, (e.g., such as described with respect to FIG. **6**A, the contrast parameter for a given image may be obtained using a smoothing operation (e.g., based on a block averaging filter, exponential filter, and/or other operation configured to reduce variability of the contrast parameter from one image to another).

At operation **1006**, a determination may be made as to whether the parameter(s) of interest meet the relevant criterion or criteria (e.g., the contrast parameter is within detection range). In some implementations, the determination of operation **1006** may be configured based on a comparison of the contrast parameter to a threshold, e.g., as shown and described with respect to FIGS. **6**A-**6**B. In one or more implementations, the threshold value may be selected (e.g., equal one in FIG. **6**B) and/or configured dynamically based on, e.g., ambient light conditions, time of day, and/or other parameters.

Responsive to a determination at operation **1006** that the contrast parameter is within the detection range (e.g., breached the threshold), the method **1000** may proceed to operation **1008** wherein an object detection indication may be produced. In some implementations, the object detection indication may comprise a message, a logic level transition, a pulse, a voltage, a register value and/or other means configured to communicate the detection indication to, e.g., a robotic controller.

FIG. **11**A illustrates a method of image analysis useful for object detection by an optical apparatus, in accordance with one or more implementations. The operations of method **1100** may be performed by an optical object detection apparatus (e.g., such as that of FIGS. **2**-**5**A) disposed on, e.g., a mobile robotic device.

At operation **1102**, an image may be obtained. In some implementations, the image may comprise a 2-array of pixels characterized by one or more channels (grayscale, RGB, and/or other representations) and/or pixel bit depth.

At operation **1104**, the obtained image may be evaluated. In some implementations, the image evaluation may be configured to determine a processing load of an image analysis apparatus (e.g., components of the apparatus **500**, **530** of FIGS. **5**A-**5**B, and/or **916** of FIG. **9**, described above). The evaluation may comprise re-sampling (e.g., down sampling/up-sampling) the image to a given reference resolution. By way of an illustration, an image analysis component may comprise an ASIC configured to accept images of a given resolution (e.g., 320×180 pixels, 640×360 pixels, and/or other resolution). The operation **1104** may be configured to adapt the input image into a compatible resolution. In some implementations, the image evaluation operation may comprise modification of image bit depths (e.g., from 12 to 8 bits), and/or a channel combination operation e.g., configured to produce a grayscale image from RGB image.

At operation **1106** a high-passed version of the image produced by operation **1104** may be obtained. In one or more implementations, the high-pass filtered image version may be produced using a filter operation configured based on a convolution operation with a Laplacian, a difference of Gaussian operation, a combination thereof, and/or other operations. In some implementations, filter operation may be configured based on a hybrid kernel determined using a convolution of the Gaussian smoothing kernel with the

Laplacian kernel. The hybrid kernel may be convolved with the image produced by operation **1104** in order to obtain the high-pass filtered image version. In some implementations of down-sampling and high-pass filtering, the image may be convolved with the processing kernel at a subset of locations in the image corresponding to the sub sampling parameters, by applying the kernel on a grid of n pixels, where n is the down-sampling parameter.

At operation **1108**, a contrast parameter of the high-pass filtered image may be determined. In one or more implementations, the contrast parameter determination may be effectuated by the processing component **522** of the apparatus **500** described with respect to FIG. **5**A using an image-domain based approach. The contrast parameter determination using the image-domain based approach may comprise determination of a maximum absolute deviation of individual pixel values within the filtered image from a reference value. The reference value may comprise a fixed pre-computed value, an image mean, image median, and/or a value determined using statistics of multiple images. In some implementations, the contrast parameter for a plurality of images value may be low-pass filtered using a running mean, an exponential filter, and/or other filter approach configured to reduce inter-image variability of the detection process.

At operation **1110**, a determination may be made as to whether the contrast parameter may fall within detection range. In some implementations, the determination of operation **1110** may be configured based on a comparison of the contrast parameter to a threshold, e.g., as shown and described with respect to FIG. **6**A. In one or more implementations, the threshold value may be selected (e.g., equal to 12% of the maximum deviation as in FIG. **6**A) and/or configured dynamically based on, e.g., ambient light conditions, time of day, and/or other parameters.

Responsive to a determination at operation **1110** that the contrast parameter may be within the detection range (e.g., breached the threshold), the method **1100** may proceed to operation **1112** wherein an object detection indication may be produced. In some implementations, the object detection indication may comprise a message, a logic level transition, a pulse, a voltage, a register value and/or other means configured to communicate the detection indication to, e.g., a robotic controller, an alert indication to a user, and/or to another entity.

FIG. **11**B illustrates a method of image analysis useful for object detection by an optical apparatus, in accordance with one or more implementations. Operations of method **1130** may be performed by an optical object detection apparatus (e.g., of FIGS. **2**-**4**D, **5**B) disposed on a mobile robotic device.

At operation **1122** an image may be obtained. In some implementations, the image may comprise a 2-array of pixels characterized by one or more channels (grayscale, RGB, and/or other representations) and/or pixel bit depth.

At operation **1124**, the image may be evaluated. In some implementations, the image evaluation may be configured to determine a processing load of an image analysis apparatus (e.g., components of the apparatus **530** of FIG. **5**B, and/or **916** of FIG. **9**, described above). The evaluation may comprise re-sampling (e.g., down sampling/up-sampling) the image to a given reference resolution. By way of an illustration, an image analysis component may comprise an ASIC configured to accept images of a given resolution (e.g., 320×180 pixels, 640×360 pixels, and/or other resolution). The operation **1124** may be configured to adapt the input image into a compatible resolution. In some implementations, the image evaluation operation may comprise modification of image bit depths (e.g., from 12 to 8 bits), and/or a channel combination operation e.g., configured to produce a grayscale image from RGB image.

At operation **1126**, a spectrum of the image produced by operation **1124** may be obtained. In one or more implementations, the spectrum may be determined using a discrete Fourier transform, and/or other transformation.

At operation **1128**, a contrast parameter of the image may be determined. In one or more implementations, the contrast parameter determination may be effectuated by the processing component **538** of the apparatus **530** described with respect to FIG. **5**B using an image spectrum-domain based approach spectral domain based approach (e.g., such as described with respect to FIG. **6**B and/or Eqn. 2). The contrast parameter determination using the image spectrum-domain based approach may comprise partitioning of the image spectrum into a low spatial frequency portion and a high spatial frequency portion. In some implementations, the spectrum partitioning may be configured by selecting a first area within e.g., circular, elliptical and/or other shape, around the origin (e.g., zero frequency), and a second area comprising the remaining portion of the spectrum (i.e., outside the ellipse/circle). The contrast image parameter may be determined for instance using a ratio of integral power within the first are to the integral power within the second area. In some implementations of a detection system with sensors elements disposed along multiple dimensions (e.g., as in FIG. **3**, FIG. **4**A, and/or FIG. **4**D, image spectrum analysis may enable determination of objects of one or more orientation. For example, a given detector configuration may be more sensitive to objects of one orientation (e.g., vertical) and less sensitive to objects of another orientation (e.g., horizontal). In some implementations, an asymmetrical Laplacian kernel and/or Gabor type filter may be used to facilitate detection of objects at a target orientation.

At operation **1130**, a determination may be made as to whether the contrast parameter may fall within detection range. In some implementations, the determination of operation **1130** may be configured based on a comparison of the contrast parameter to a threshold, e.g., as shown and described with respect to FIG. **6**B. In one or more implementations, the threshold value may be selected (e.g., equal one as in FIG. **6**B) and/or configured dynamically based on, e.g., ambient light conditions, time of day, and/or other parameters, as previously described herein.

Responsive to a determination at operation **1130** that the contrast parameter is within the detection range (e.g., breached the threshold) the method **1120** may proceed to operation **1132**, wherein an object detection indication may be produced. In some implementations, the object detection indication may comprise a message, a logic level transition, a pulse, a wireless transmission, a voltage, a register value and/or other means configured to communicate the detection indication to, e.g., a robotic controller, an alert indication to a user, and/or to another entity.

FIG. **12** illustrates a method of executing an action by a robotic vehicle, the action execution configured based on an outcome of object detection methodology of the disclosure, in accordance with one or more implementations.

At operation **1202**, a vehicle (e.g., the vehicle **100** of FIG. **1**) may be operated, such as to for example navigate a trajectory. The trajectory navigation may be configured to for instance track and/or acquire video of a subject of interest (e.g., a user) from an aerial vehicle (e.g., a quadcopter), for example as described in U.S. Patent Application Ser. No. 62/007,311, entitled "APPARATUS AND METH-

ODS FOR TRACKING USING AERIAL VIDEO", filed on Jun. 3, 2014 the foregoing being incorporated herein by reference in its entirety. In some implementations, the vehicle may comprise a robotic device equipped with a learning controller, e.g., such as described in U.S. patent application Ser. No. 13/842,530, entitled "ADAPTIVE PREDICTOR APPARATUS AND METHODS", filed herewith on Mar. 15, 2013, the foregoing being incorporated herein by reference in its entirety. In some implementations, the trajectory navigation may comprise one or more actions configured to enable landing of the aerial vehicle, e.g., as described in U.S. patent application Ser. No. 14/285,466, entitled "APPARATUS AND METHODS FOR ROBOTIC OPERATION USING VIDEO IMAGERY", filed herewith on May 22, 2014, and/or Ser. No. 14/285,414, entitled "APPARATUS AND METHODS FOR DISTANCE ESTIMATION USING MULTIPLE IMAGE SENSORS", filed on May 22, 2014, each of the foregoing incorporated herein by reference in its entirety.

At operation **1204**, an image of the surrounding may be obtained. In one or more implementation, the image may comprise representation of one or more objects in the surroundings (e.g., the objects **112**, **122** in FIG. **1**).

At operation **1206**, the image may be analyzed using to obtain contrast parameter. In one or more implementations, the contrast parameter determination may be configured using an image-domain approach (e.g., described above with respect to FIGS. **5**A, **6**A, **7**A-**7**B, and/or **11**A) or an image spectrum-domain approach (e.g., described above with respect to FIGS. **5**B, **6**B, **8**A-**8**B, and/or **11**B).

At operation **1208**, a determination may be made as to whether an object may be present in the image obtained at operation **1204**. In some implementations, the object presence may be determined based on a comparison of the contrast parameter to a threshold; e.g., as shown and described with respect to FIGS. **6**A-**6**B. In one or more implementations, the threshold value may be selected (e.g., equal one as in FIG. **6**B) and/or configured dynamically based on, e.g., ambient light conditions, time of day, and/or other parameters.

Responsive to a determination at operation **1208** that the object is present, the method **1200** may proceed to operation **1210**, wherein the trajectory may be adapted. In some implementations, the object presence may correspond to a target being present in the surroundings and/or an obstacle present in the path of the vehicle. The trajectory adaptation may comprise alteration of vehicle course, speed, and/or other parameter. The trajectory adaptation may be configured based on one or more characteristics of the object (e.g., persistence over multiple frames, distance, location, and/or other parameters). In some implementations of target approach and/or obstacle avoidance by a robotic vehicle, when a target may be detected, the trajectory adaptation may be configured to reduce distance between the target and the vehicle (e.g., during landing, approaching a home base, a trash can, and/or other action). When an obstacle may be detected, the trajectory adaptation may be configured to maintain distance (e.g., stop), increase distance (e.g., go away), alter course (e.g., turn) in order to avoid collision. In some implementations, target/obstacle discrimination may be configured based on object color (e.g., approach red ball avoid all other objects); object reflectivity (approach bright objects), shape, orientation, and or other characteristics. In some implementations, object discrimination may be configured based on input from other sensors (e.g., RFID signal, radio beacon signal, acoustic pinger signal), location of the robotic device (e.g., when the vehicle is in the middle of a room all objects are treated as obstacles), and/or other approaches.

Although the above application of the object detection methodology is described for a vehicle navigation application, it will be appreciated by those skilled in the arts that various other implementations of the methodology of the present disclosure may be utilized. By way of an illustration, a security camera device may be used to observe and detect potential intruders (e.g., based on sudden appearance of objects) and/or detect theft (e.g., based on a sudden disappearance of previously present objects)

Implementations of the principles of the disclosure may be further applicable to a wide assortment of applications including computer-human interaction (e.g., recognition of gestures, voice, posture, face, and/or other interactions), controlling processes (e.g., processes associated with an industrial robot, autonomous and other vehicles, and/or other processes), augmented reality applications, access control (e.g., opening a door based on a gesture, opening an access way based on detection of an authorized person), detecting events (e.g., for visual surveillance or people or animal counting, tracking).

A video processing system of the disclosure may be implemented in a variety of ways such as, for example, a software library, an IP core configured for implementation in a programmable logic device (e.g., FPGA), an ASIC, a remote server, comprising a computer readable apparatus storing computer executable instructions configured to perform feature detection. Myriad other applications exist that will be recognized by those of ordinary skill given the present disclosure.

Although the system(s) and/or method(s) of this disclosure have been described in detail for the purpose of illustration based on what is currently considered to be the most practical and preferred implementations, it is to be understood that such detail is solely for that purpose and that the disclosure is not limited to the disclosed implementations, but, on the contrary, is intended to cover modifications and equivalent arrangements that are within the spirit and scope of the appended claims. For example, it is to be understood that the present disclosure contemplates that, to the extent possible, one or more features of any implementation can be combined with one or more features of any other implementation.

What is claimed is:

1. A method of navigating an apparatus, comprising:

obtaining at least one image associated with surroundings of the apparatus using a sensor, the apparatus comprising a controller, an actuator and the sensor;

analyzing the at least one image to detect a presence of an object in the at least one image;

determining the presence of the object based on comparing a contrast parameter of the at least one image to a threshold, the contrast parameter corresponding to a maximum absolute deviation of pixels within the at least one image from a reference value, and the threshold being dynamically configured based on one or more parameters; and

causing the controller to selectively activate the actuator based on the determination that the object is within the range of the apparatus.

2. The method of claim **1**, further comprising:

adapting movement of the apparatus as the object is detected in the surroundings of the apparatus.

3. The method of claim 1, wherein the contrast parameter corresponds to partitioning of the at least one image into a low spatial frequency portion and a high spatial frequency portion.

4. The method of claim 1, wherein the partitioning is configured by selecting a first area and a second area within the at least one image, the first area corresponds to region around zero frequency, and the second area corresponds to the remaining portion of the spectrum.

5. The method of claim 1, wherein the one or more parameters include ambient light conditions surrounding the apparatus and time of day.

6. The method of claim 1, further comprising:

detecting the object at multiple locations from the apparatus based on the sensor being at a slanted angle; and

determine, based on the detection of the object, whether the apparatus is approaching the object or the object is approaching the apparatus.

7. The method of claim 1, wherein the sensor comprising a linear array of photo sensitive elements.

8. The method of claim 7, wherein the linear array of photo sensitive elements disposed along axial direction of a lens.

9. The method of claim 1, wherein the sensor comprises one or more sensing layers axially displaced from one another, each one of the one or more sensing layers comprise a plurality of photo sensitive elements.

10. The method of claim 9, wherein the axial displacement of the one or more sensing layers is configured to produce an axial distribution of multiple focal planes, and wherein the axial distribution of multiple focal planes is configurable to enable detection of object positioned in front of the apparatus.

11. A non-transitory computer-readable storage medium having computer readable instructions stored thereon, that when executed by at least one controller device configure the at least one controller device to:

receive data from at least one sensor, the data comprising at least one image of an environment;

analyze an image, from the data generated by the at least one sensor, to determine a contrast parameter of the image, the contrast parameter comprising a deviation parameter, a reference value, and/or threshold associated with object detection, the contrast parameter corresponding to a maximum absolute deviation of pixels within the at least one image from a reference value;

determine presence of the object based on comparing the contrast parameter of the image to a threshold, the threshold being dynamically configured based on one or more parameters; and

determine a location of the object from the contrast parameter meeting or exceeding the threshold at the location of the object.

12. The non-transitory computer-readable storage medium of claim 11, wherein the at least one controller device is further configurable to execute the computer readable instructions to:

receive data from the at least one sensor, the data comprising dynamic lighting parameters of the environment; and

adjust the threshold for object detection based on the data from the at least one sensor.

13. The non-transitory storage medium of claim 11, wherein the at least one controller device is further configurable to execute the computer readable instructions to:

determine a contrast parameter criterion comprising a fixed or a dynamic value from statistics of multiple images gathered by the at least one sensor.

14. The non-transitory storage medium of claim 11, wherein the at least one controller device is further configurable to execute the computer readable instructions to:

partition a first image into at least two sub-images, the at least two sub-images comprise different energy spectra or regions of the first image; and

apply filtering operations to the at least one of the two sub-images prior to the determination of a contrast parameter criterion.

15. The non-transitory storage medium of claim 11, wherein the at least one controller device is further configurable to execute the computer readable instructions to:

apply an asymmetrical filter to the at least one image received from the at least one sensor to facilitate the detection of an object at a target orientation.

16. A method for detection of objects near an apparatus, comprising:

gathering data from at least one sensor, the data comprising at least one image of an environment surrounding the apparatus;

analyzing the at least one image, to determine a contrast parameter of the at least one image, the contrast parameter comprising a deviation parameter, a reference value, and/or threshold associated with object detection, the contrast parameter corresponding to a maximum absolute deviation of pixels within the at least one image from a reference value;

determining if an object is present in the image based on comparing the contrast parameter of the at least one image to a threshold, the threshold being dynamically configured based on one or parameters.

17. The method of claim 16, further comprising:

partitioning a first image, from the plurality of images, into at least two sub-images comprising two different energy spectra or regions of the first image; and

applying filtering and/or cropping operations to the at least one of the two sub-images prior to the determination of a contrast parameter criterion.

18. The method of claim 16, further comprising:

applying an asymmetrical filter to the data from the at least one sensor to facilitate detection of objects at a target orientation.

* * * * *