US009076214B2

(12) **United States Patent**
Tsutsumi

(10) **Patent No.: US 9,076,214 B2**
(45) **Date of Patent: Jul. 7, 2015**

(54) **IMAGE ACQUISITION APPARATUS AND IMAGE PROCESSING APPARATUS USING SELECTED IN-FOCUS IMAGE DATA**

(75) Inventor: **Shohei Tsutsumi**, Yokohama (JP)

(73) Assignee: **Canon Kabushiki Kaisha**, Tokyo (JP)

(*) Notice: Subject to any disclaimer, the term of this patent is extended or adjusted under 35 U.S.C. 154(b) by 383 days.

(21) Appl. No.: **13/567,198**

(22) Filed: **Aug. 6, 2012**

(65) **Prior Publication Data**

US 2013/0038723 A1 Feb. 14, 2013

(30) **Foreign Application Priority Data**

Aug. 11, 2011 (JP) 2011-176117

(51) **Int. Cl.**

H04N 7/18	(2006.01)
G06T 7/00	(2006.01)
G01S 5/16	(2006.01)
H04N 5/225	(2006.01)
H04N 5/232	(2006.01)

(52) **U.S. Cl.**

CPC ***G06T 7/0075*** (2013.01); ***G01S 5/16*** (2013.01); ***H04N 5/2258*** (2013.01); ***H04N 5/23212*** (2013.01); *G06T 2207/10012* (2013.01); *G06T 2207/10024* (2013.01)

(58) **Field of Classification Search**

CPC H04N 5/2258; H04N 5/23212
USPC 348/139
See application file for complete search history.

(56) **References Cited**

U.S. PATENT DOCUMENTS

4,928,175	A *	5/1990	Haggren	348/159
5,793,900	A *	8/1998	Nourbakhsh et al.	382/263
5,917,937	A *	6/1999	Szeliski et al.	382/154
6,674,461	B1 *	1/2004	Klapman	348/42
7,015,954	B1 *	3/2006	Foote et al.	348/218.1
7,986,343	B2 *	7/2011	Kumagai et al.	348/208.13
2002/0118286	A1 *	8/2002	Kanade et al.	348/222.1
2002/0118969	A1 *	8/2002	Kanade et al.	396/322
2002/0145660	A1 *	10/2002	Kanade et al.	348/36
2003/0052971	A1 *	3/2003	Gutta et al.	348/159
2003/0076413	A1 *	4/2003	Kanade et al.	348/139
2003/0210329	A1 *	11/2003	Aagaard et al.	348/159
2004/0240052	A1 *	12/2004	Minefuji et al.	359/435
2007/0285559	A1 *	12/2007	Perlman et al.	348/371
2008/0239135	A1 *	10/2008	Tamura	348/335
2011/0211068	A1 *	9/2011	Yokota	348/139
2012/0236168	A1 *	9/2012	Tsutsumi	348/208.4
2013/0063614	A1 *	3/2013	Tsutsumi	348/208.4

FOREIGN PATENT DOCUMENTS

JP	2000-236434	A	8/2000
JP	2007-158825	A	6/2007
JP	2008-196891	A	8/2008
JP	2009-216600	A	9/2009
JP	2011-117787	A	6/2011
JP	2011-149931	A	8/2011

* cited by examiner

Primary Examiner — Usman Khan
(74) *Attorney, Agent, or Firm* — Fitzpatrick, Cella, Harper & Scinto

(57) **ABSTRACT**

An image acquisition apparatus according to the present invention includes a first image capturing unit group including a plurality of image capturing units in which at least part of in-focus distance ranges overlap each other and a second image capturing unit group including a plurality of image capturing units in which at least part of in-focus distance ranges overlap each other. The second image capturing unit group is different from the first image capturing unit group. A first object distance to an object is obtained from image data acquired by the first image capturing unit group and a second object distance different from the first object distance is obtained from image data acquired by the second image capturing unit group.

10 Claims, 31 Drawing Sheets

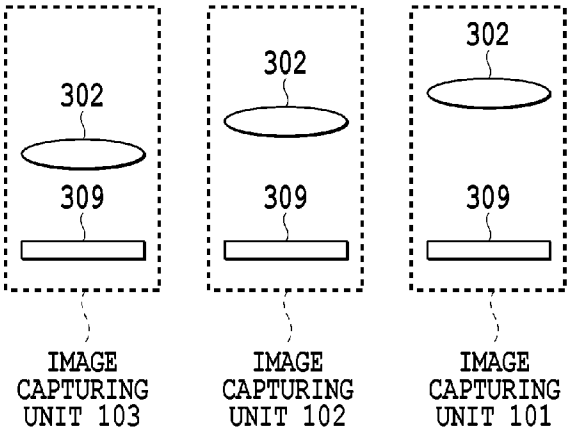

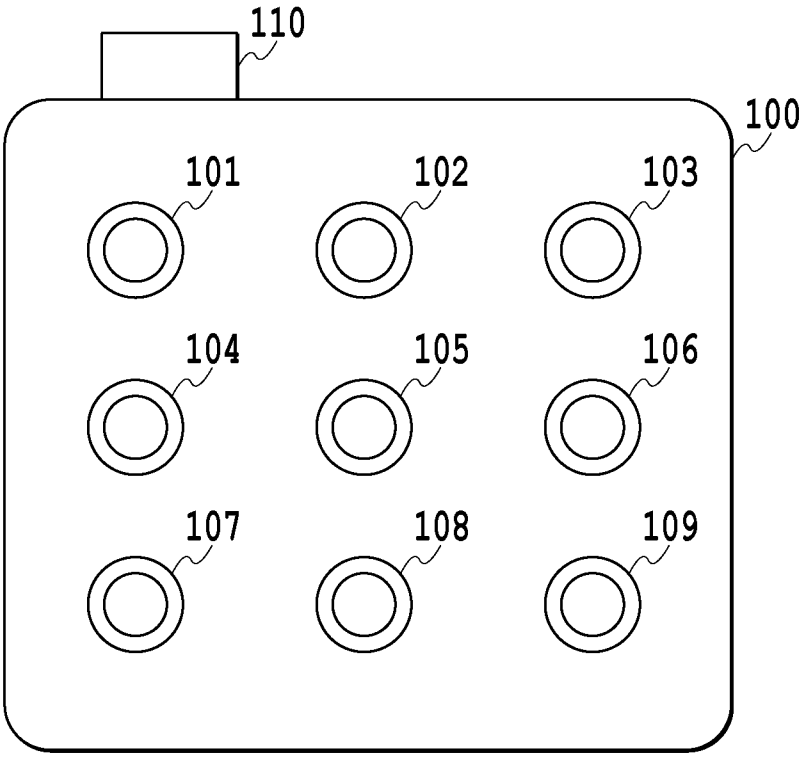

FIG.1

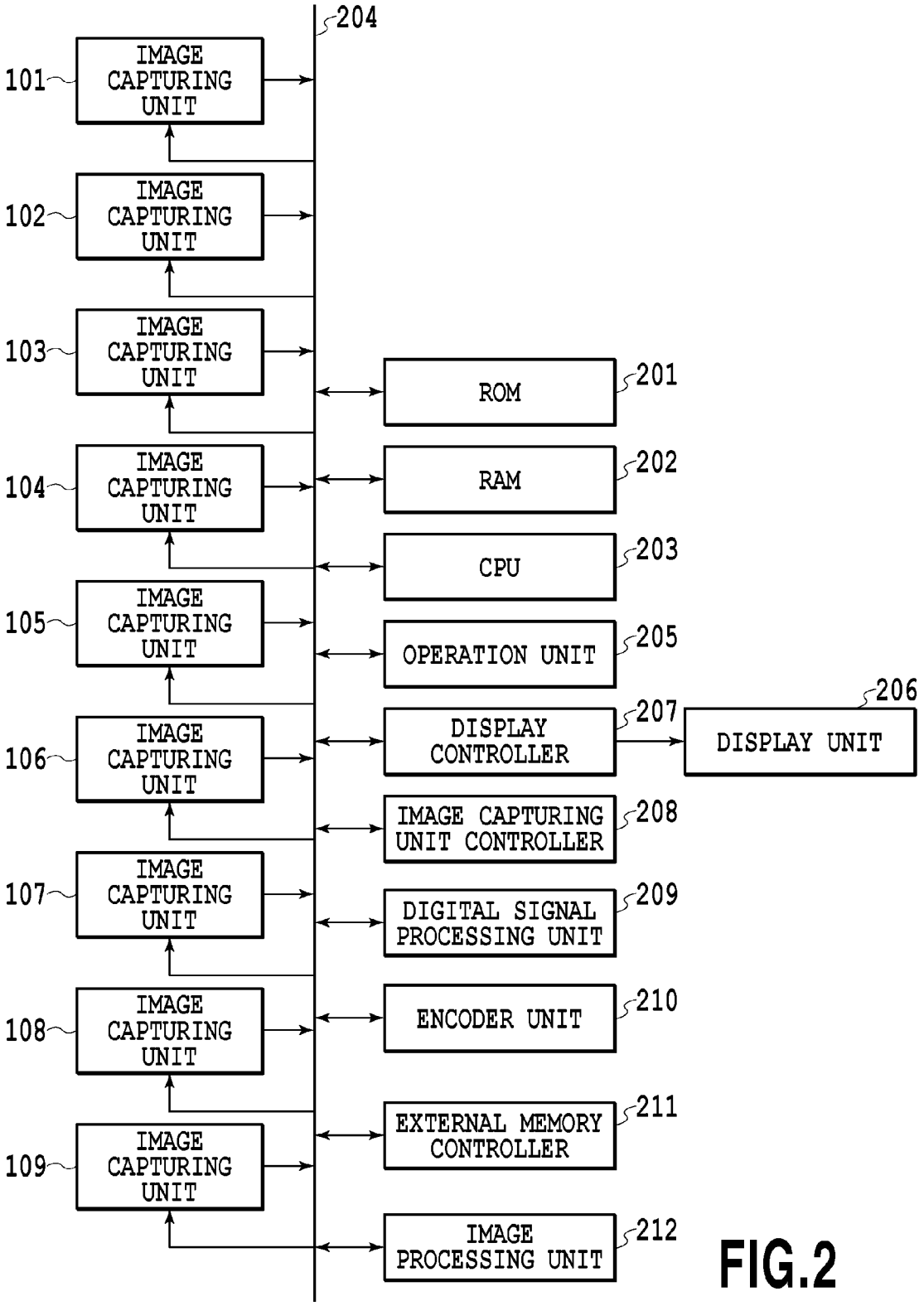
204
101
IMAGE CAPTURING UNIT
102
IMAGE CAPTURING UNIT
103
IMAGE CAPTURING UNIT
104
IMAGE CAPTURING UNIT
105
IMAGE CAPTURING UNIT
106
IMAGE CAPTURING UNIT
107
IMAGE CAPTURING UNIT
108
IMAGE CAPTURING UNIT
109
IMAGE CAPTURING UNIT
ROM
201
RAM
202
CPU
203
OPERATION UNIT
205
DISPLAY CONTROLLER
207
DISPLAY UNIT
206
IMAGE CAPTURING UNIT CONTROLLER
208
DIGITAL SIGNAL PROCESSING UNIT
209
ENCODER UNIT
210
EXTERNAL MEMORY CONTROLLER
211
IMAGE PROCESSING UNIT
212

FIG.2

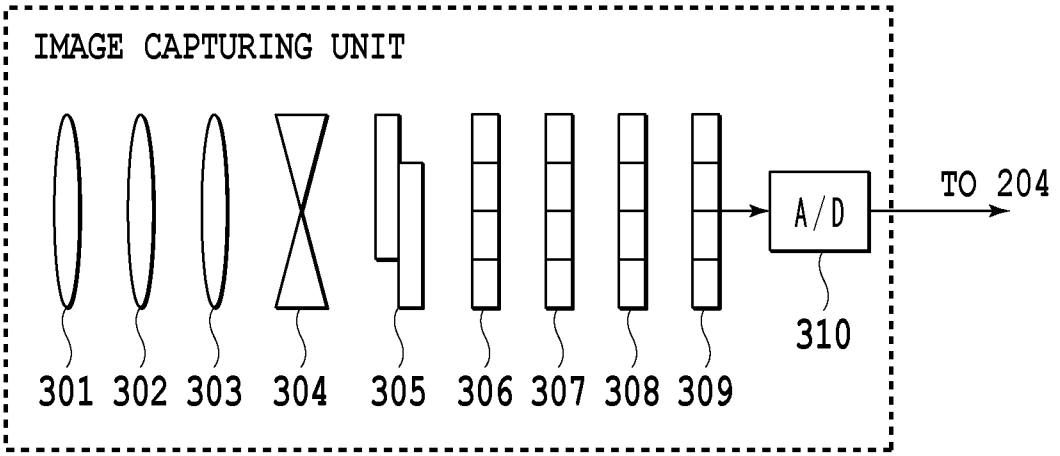
IMAGE CAPTURING UNIT
A/D
TO 204
310
301 302 303 304 305 306 307 308 309

FIG.3A

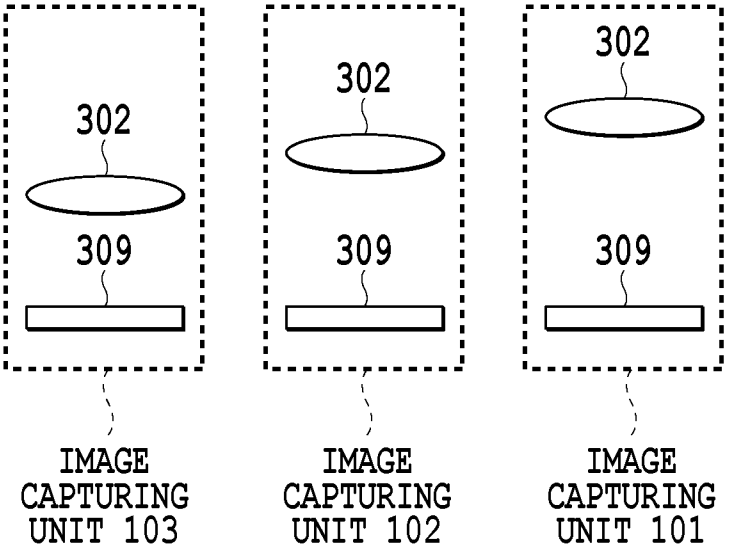
302
309
IMAGE CAPTURING UNIT 103
302
309
IMAGE CAPTURING UNIT 102
302
309
IMAGE CAPTURING UNIT 101

FIG.3B

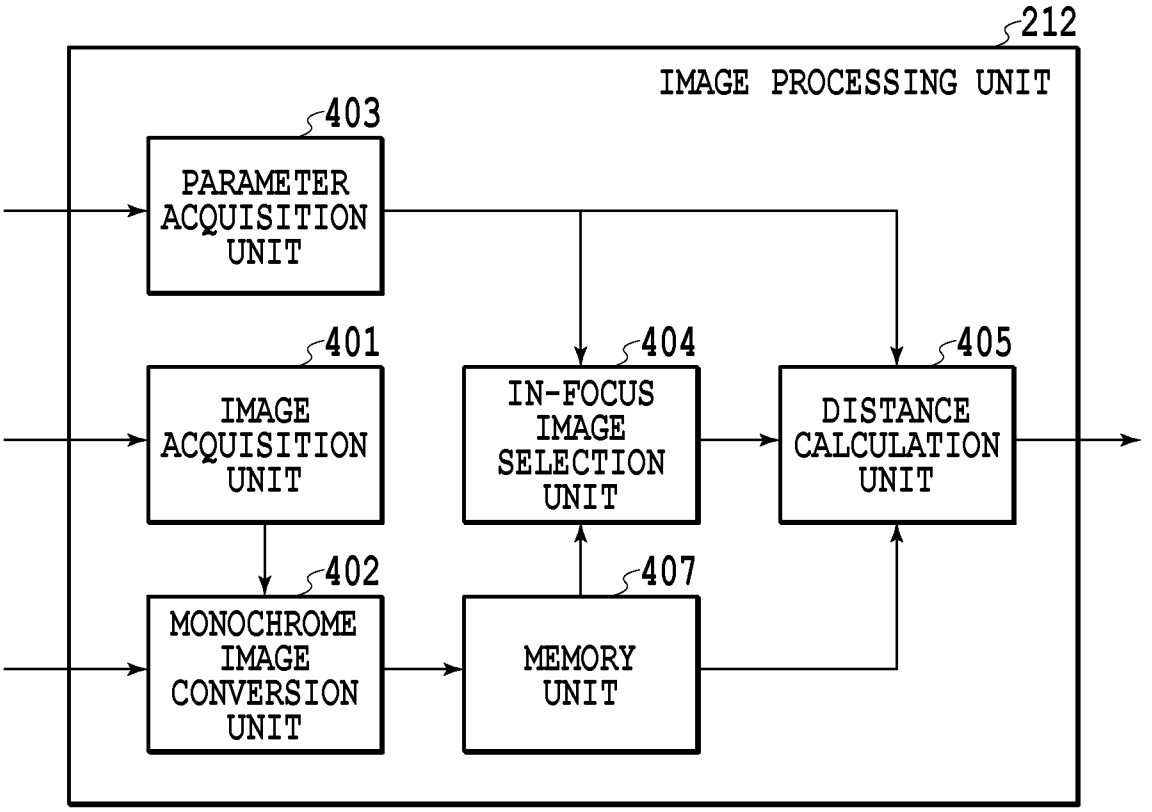
212
IMAGE PROCESSING UNIT
403
PARAMETER ACQUISITION UNIT
401
IMAGE ACQUISITION UNIT
404
IN-FOCUS IMAGE SELECTION UNIT
405
DISTANCE CALCULATION UNIT
402
MONOCHROME IMAGE CONVERSION UNIT
407
MEMORY UNIT

FIG.4

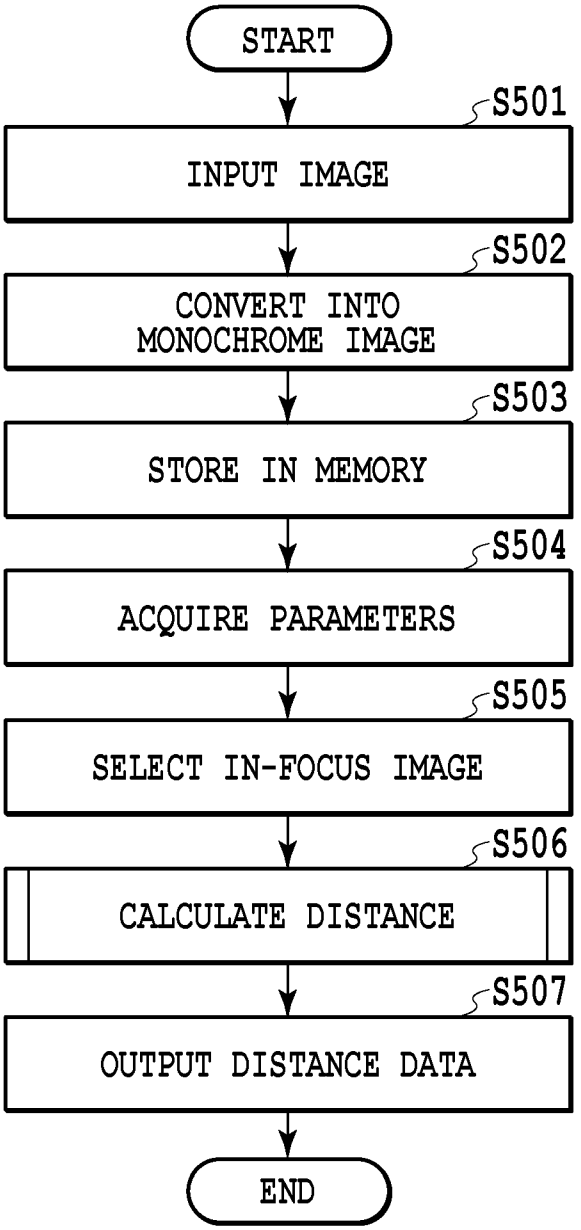
START
S501
INPUT IMAGE
S502
CONVERT INTO MONOCHROME IMAGE
S503
STORE IN MEMORY
S504
ACQUIRE PARAMETERS
S505
SELECT IN-FOCUS IMAGE
S506
CALCULATE DISTANCE
S507
OUTPUT DISTANCE DATA
END

FIG.5

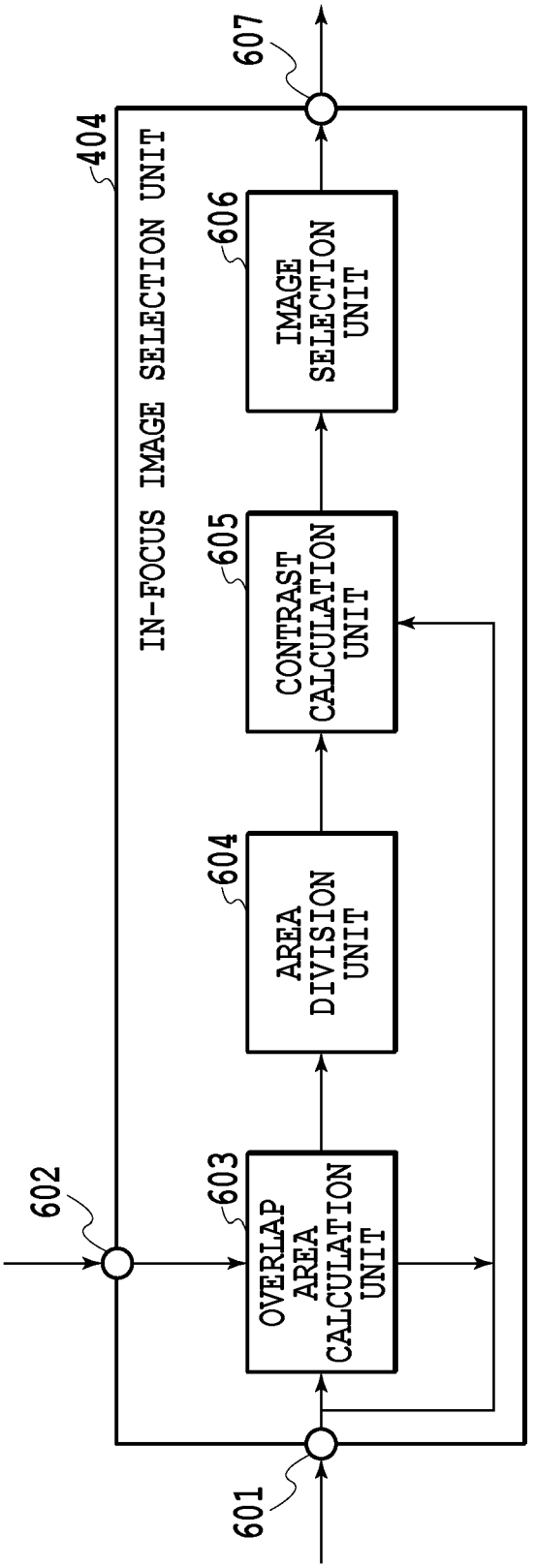
IN-FOCUS IMAGE SELECTION UNIT
404
601
602
603
OVERLAP AREA CALCULATION UNIT
604
AREA DIVISION UNIT
605
CONTRAST CALCULATION UNIT
606
IMAGE SELECTION UNIT
607

FIG.6

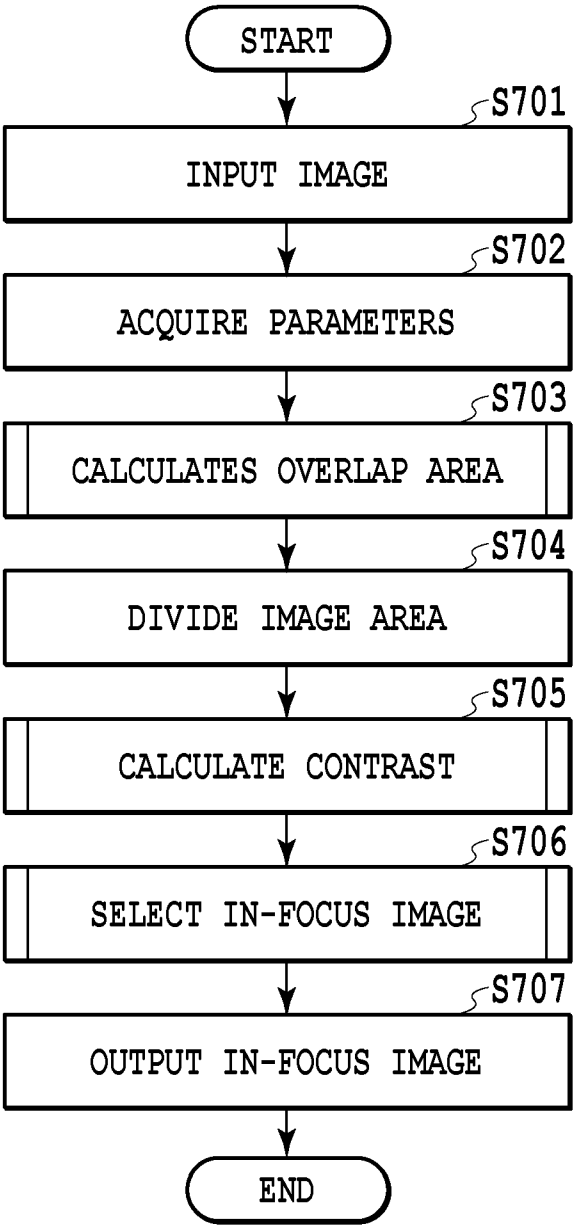
START
S701
INPUT IMAGE
S702
ACQUIRE PARAMETERS
S703
CALCULATES OVERLAP AREA
S704
DIVIDE IMAGE AREA
S705
CALCULATE CONTRAST
S706
SELECT IN-FOCUS IMAGE
S707
OUTPUT IN-FOCUS IMAGE
END

FIG.7

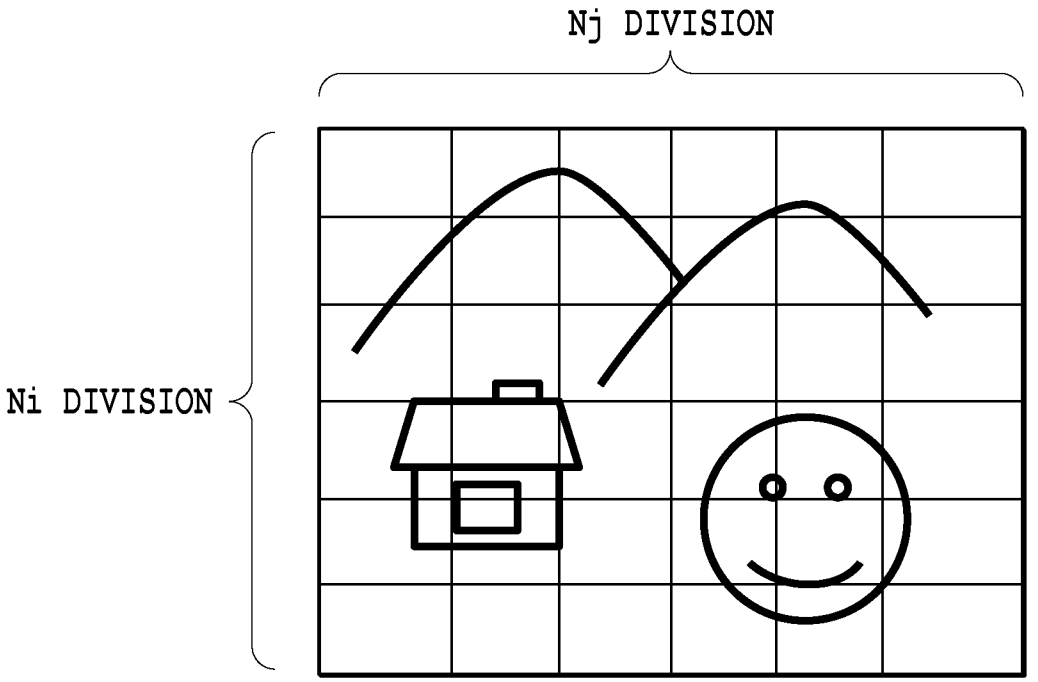

FIG.8

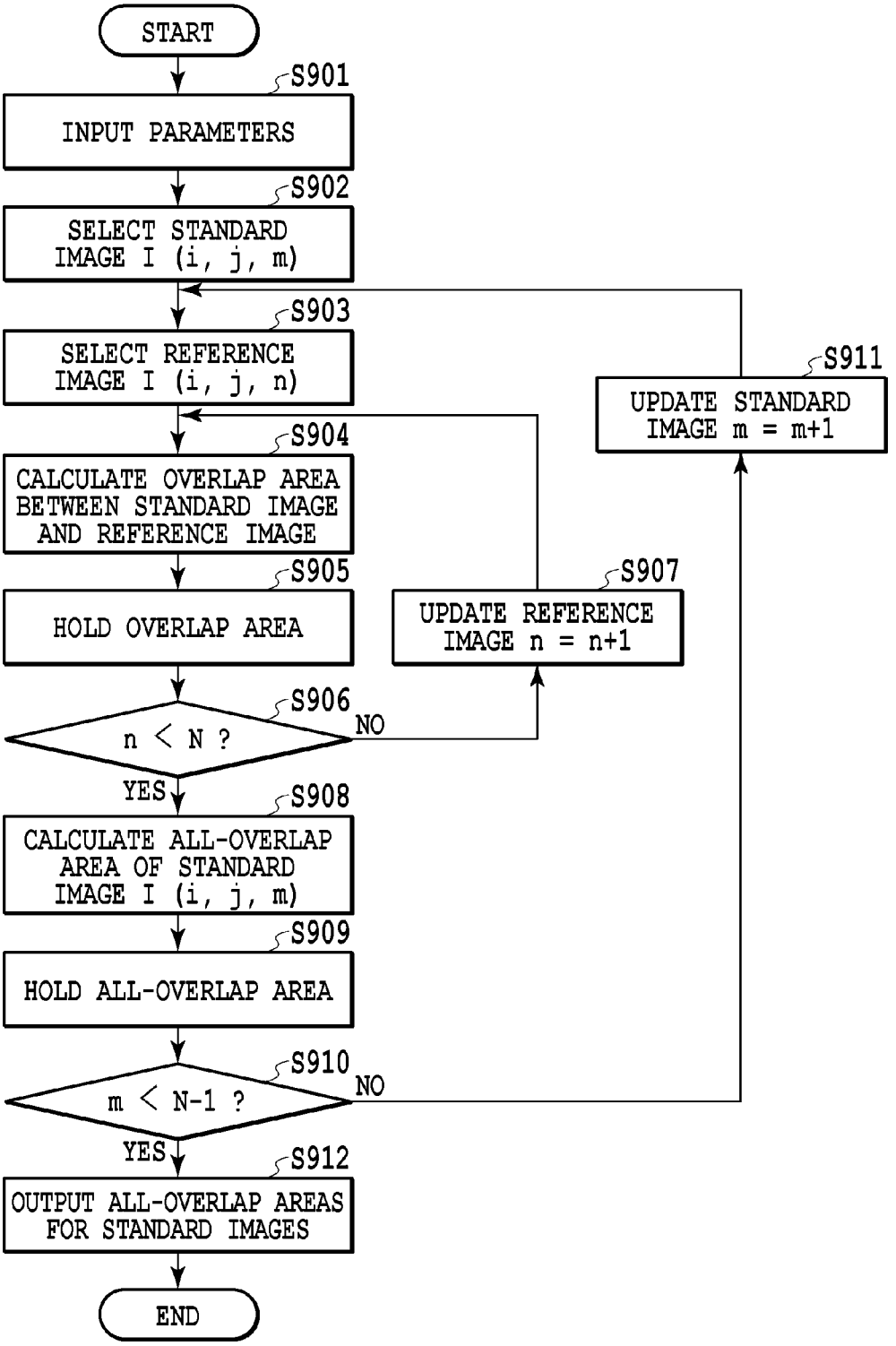
START
S901
INPUT PARAMETERS
S902
SELECT STANDARD IMAGE I (i, j, m)
S903
SELECT REFERENCE IMAGE I (i, j, n)
S904
CALCULATE OVERLAP AREA BETWEEN STANDARD IMAGE AND REFERENCE IMAGE
S905
HOLD OVERLAP AREA
S906
n < N ?
NO
YES
S907
UPDATE REFERENCE IMAGE n = n+1
S908
CALCULATE ALL-OVERLAP AREA OF STANDARD IMAGE I (i, j, m)
S909
HOLD ALL-OVERLAP AREA
S910
m < N-1 ?
NO
YES
S911
UPDATE STANDARD IMAGE m = m+1
S912
OUTPUT ALL-OVERLAP AREAS FOR STANDARD IMAGES
END

FIG.9

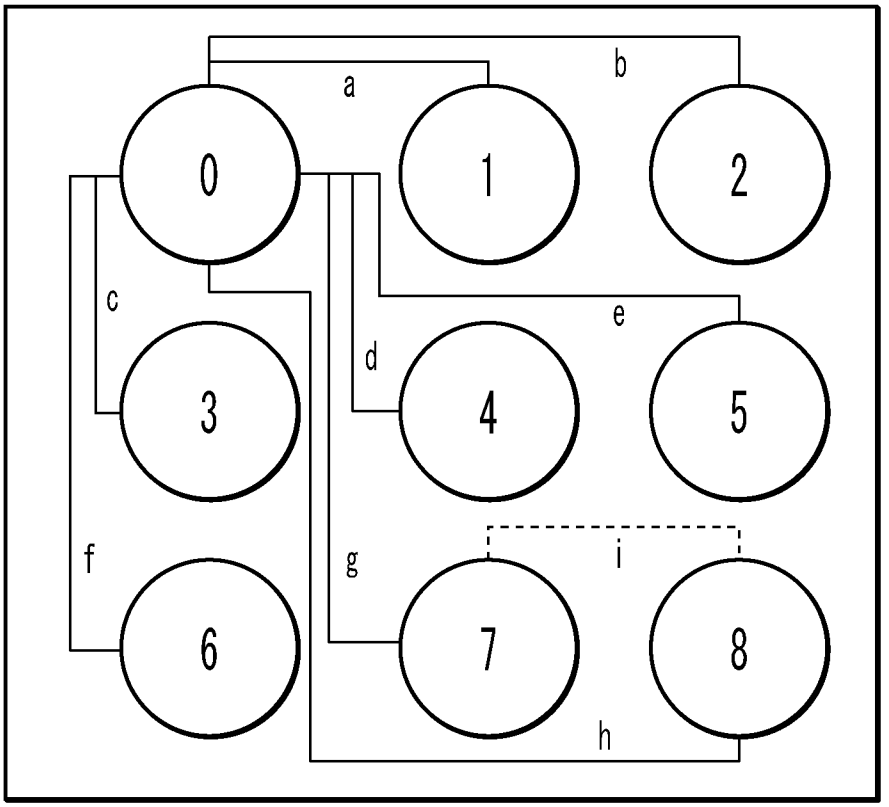


```
WHEN m = 0, n IS 1 TO 8
WHEN m = 1, n IS 2 TO 8
WHEN m = 2, n IS 3 TO 8
WHEN m = 3, n IS 4 TO 8
WHEN m = 4, n IS 5 TO 8
WHEN m = 5, n IS 6 TO 8
WHEN m = 6, n IS 7 TO 8
WHEN m = 7, n IS 8
```

FIG.10

FIG.11A

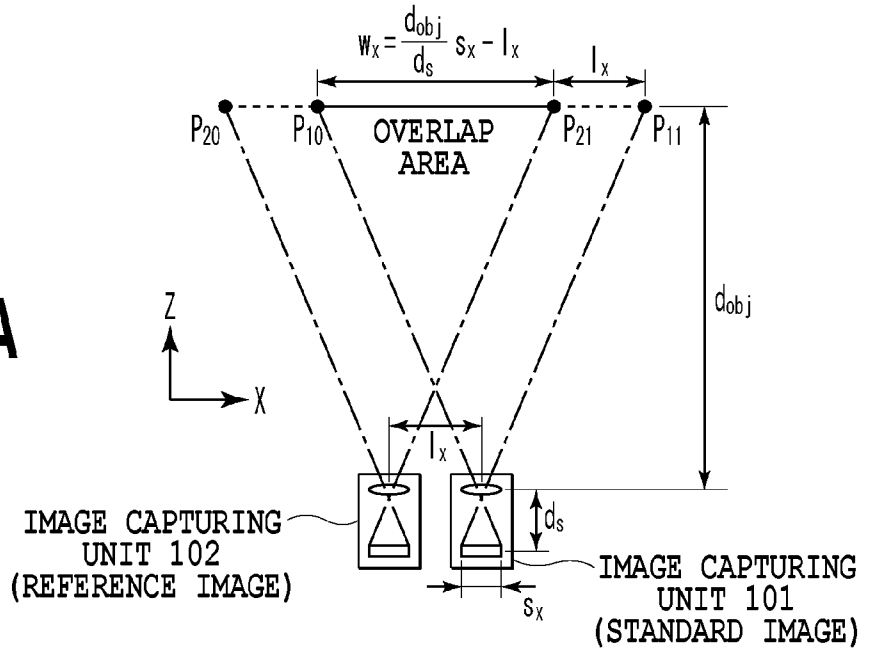

FIG.11B

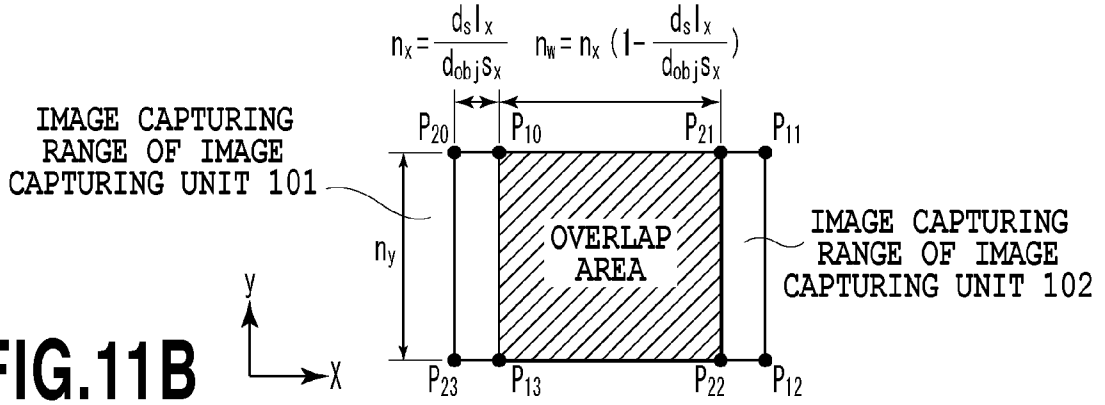

FIG.11C

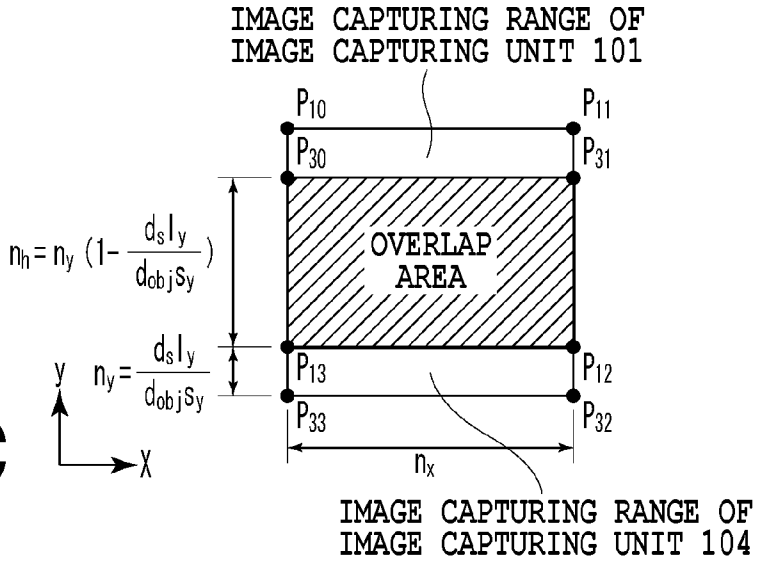

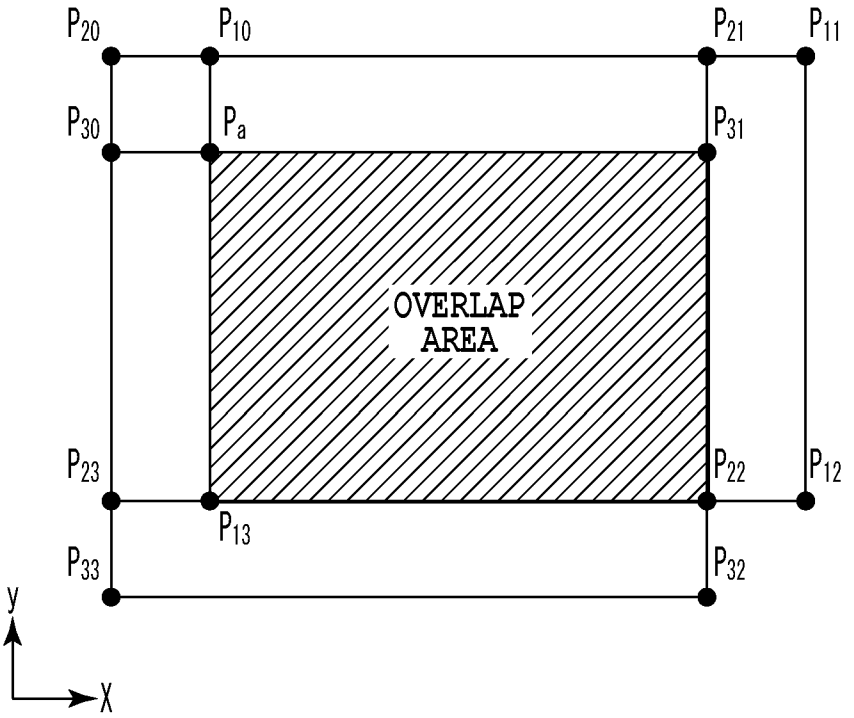
P20
P10
P21
P11
P30
Pa
P31
OVERLAP
AREA
P23
P22
P12
P13
P33
P32
y
X

FIG.12

FIG.13A

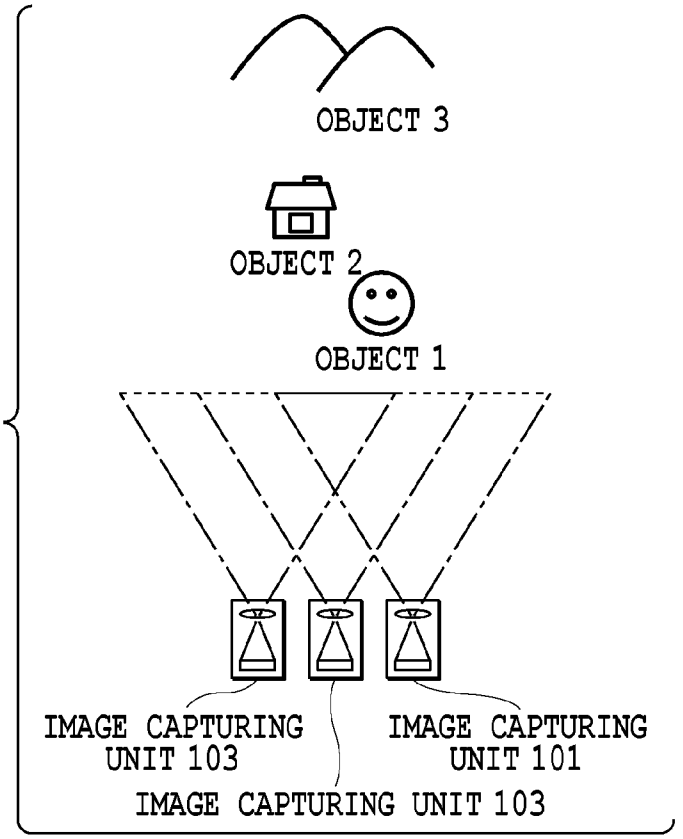

FIG.13B

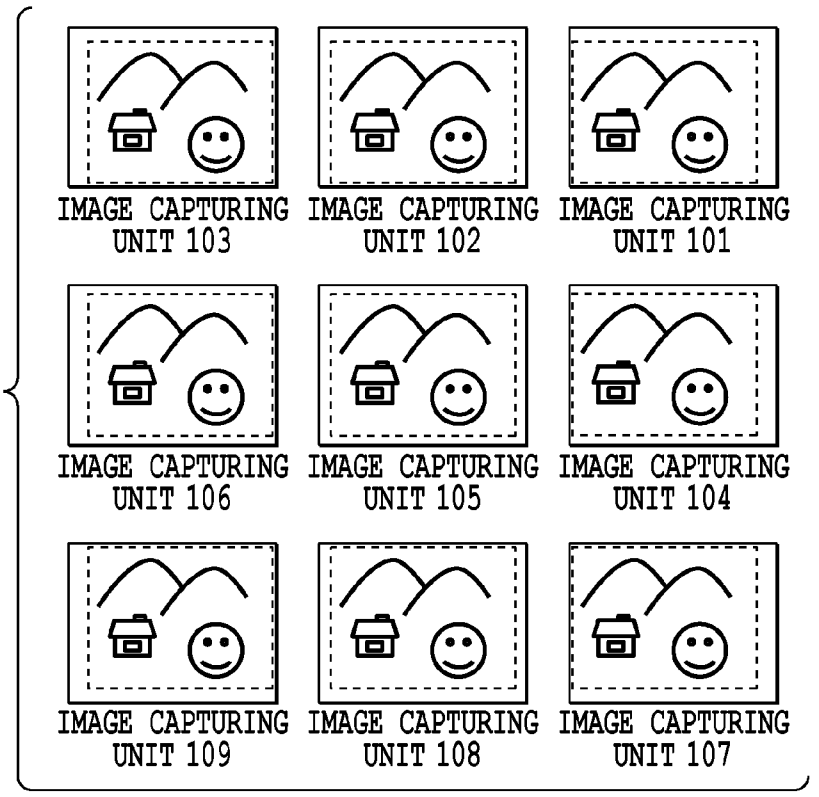

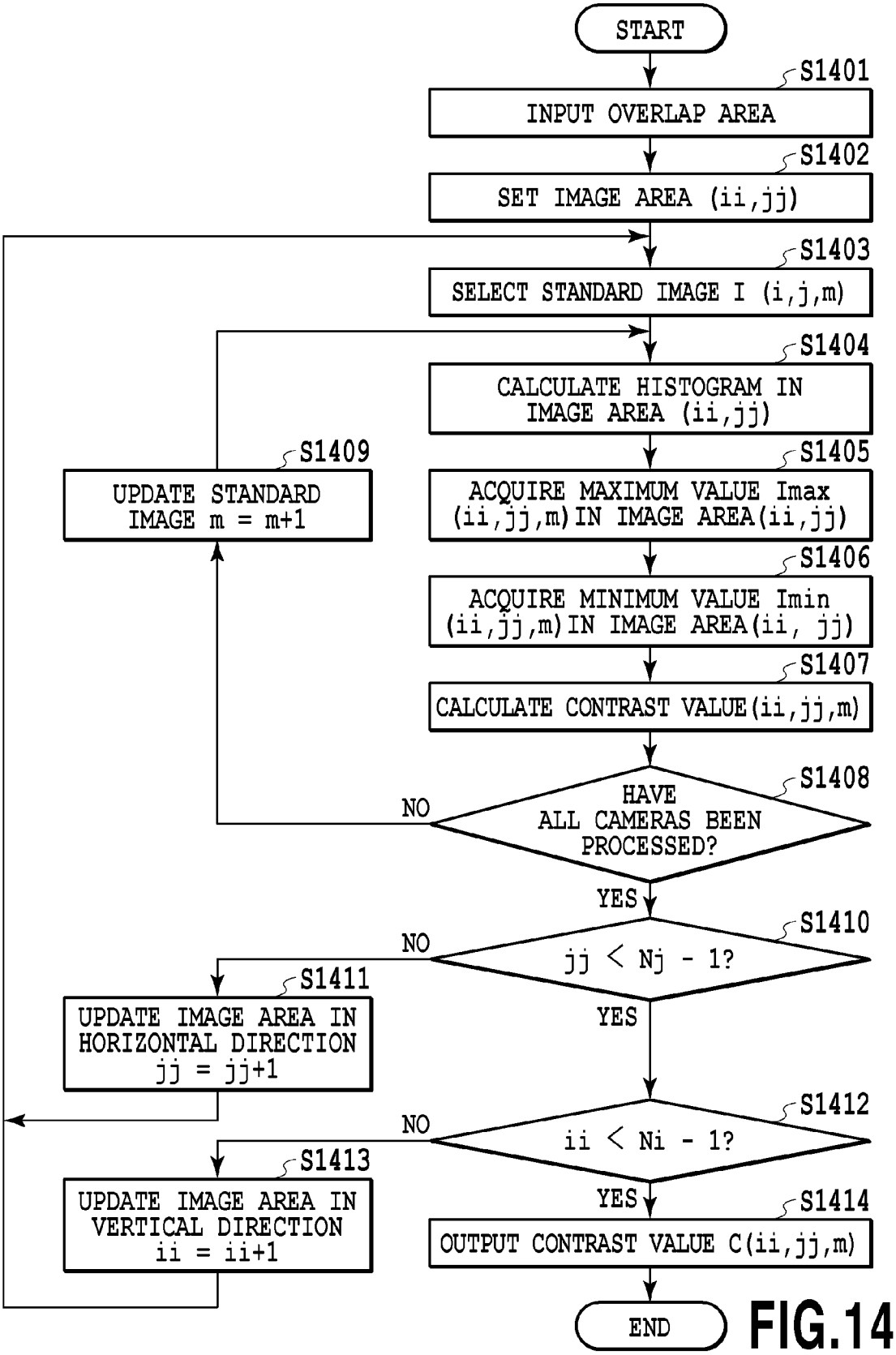
START
S1401
INPUT OVERLAP AREA
S1402
SET IMAGE AREA (ii,jj)
S1403
SELECT STANDARD IMAGE I (i,j,m)
S1404
CALCULATE HISTOGRAM IN IMAGE AREA (ii,jj)
S1405
ACQUIRE MAXIMUM VALUE Imax (ii,jj,m) IN IMAGE AREA(ii,jj)
S1406
ACQUIRE MINIMUM VALUE Imin (ii,jj,m) IN IMAGE AREA(ii, jj)
S1407
CALCULATE CONTRAST VALUE(ii,jj,m)
S1408
HAVE ALL CAMERAS BEEN PROCESSED?
NO
YES
S1409
UPDATE STANDARD IMAGE m = m+1
S1410
jj < Nj - 1?
NO
YES
S1411
UPDATE IMAGE AREA IN HORIZONTAL DIRECTION jj = jj+1
S1412
ii < Ni - 1?
NO
YES
S1413
UPDATE IMAGE AREA IN VERTICAL DIRECTION ii = ii+1
S1414
OUTPUT CONTRAST VALUE C(ii,jj,m)
END

FIG.14

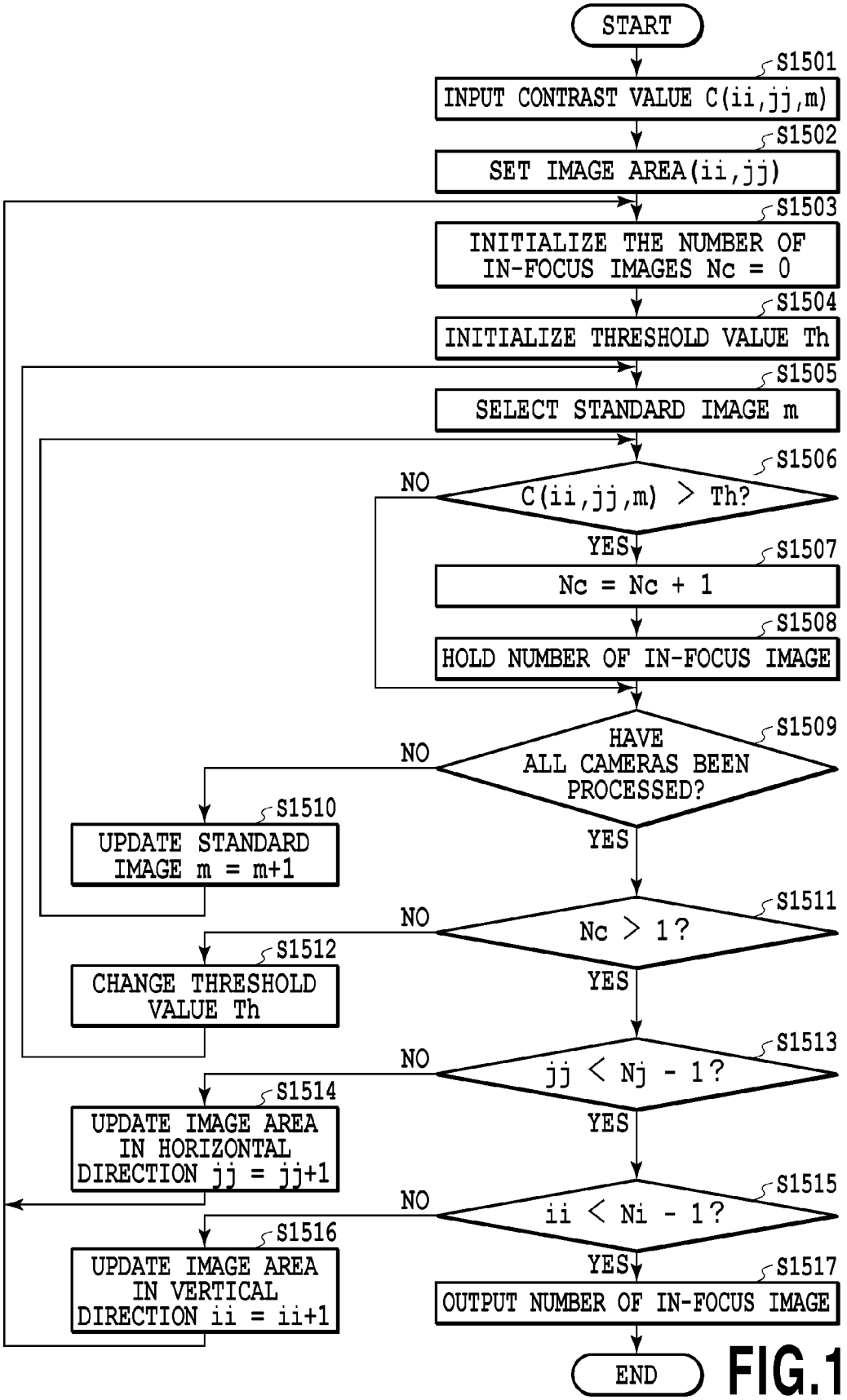
START
S1501
INPUT CONTRAST VALUE C(ii,jj,m)
S1502
SET IMAGE AREA(ii,jj)
S1503
INITIALIZE THE NUMBER OF IN-FOCUS IMAGES Nc = 0
S1504
INITIALIZE THRESHOLD VALUE Th
S1505
SELECT STANDARD IMAGE m
S1506
C(ii,jj,m) > Th?
NO
YES
S1507
Nc = Nc + 1
S1508
HOLD NUMBER OF IN-FOCUS IMAGE
S1509
HAVE ALL CAMERAS BEEN PROCESSED?
NO
YES
S1510
UPDATE STANDARD IMAGE m = m+1
S1511
Nc > 1?
NO
YES
S1512
CHANGE THRESHOLD VALUE Th
S1513
jj < Nj - 1?
NO
YES
S1514
UPDATE IMAGE AREA IN HORIZONTAL DIRECTION jj = jj+1
S1515
ii < Ni - 1?
NO
YES
S1516
UPDATE IMAGE AREA IN VERTICAL DIRECTION ii = ii+1
S1517
OUTPUT NUMBER OF IN-FOCUS IMAGE
END

FIG.15

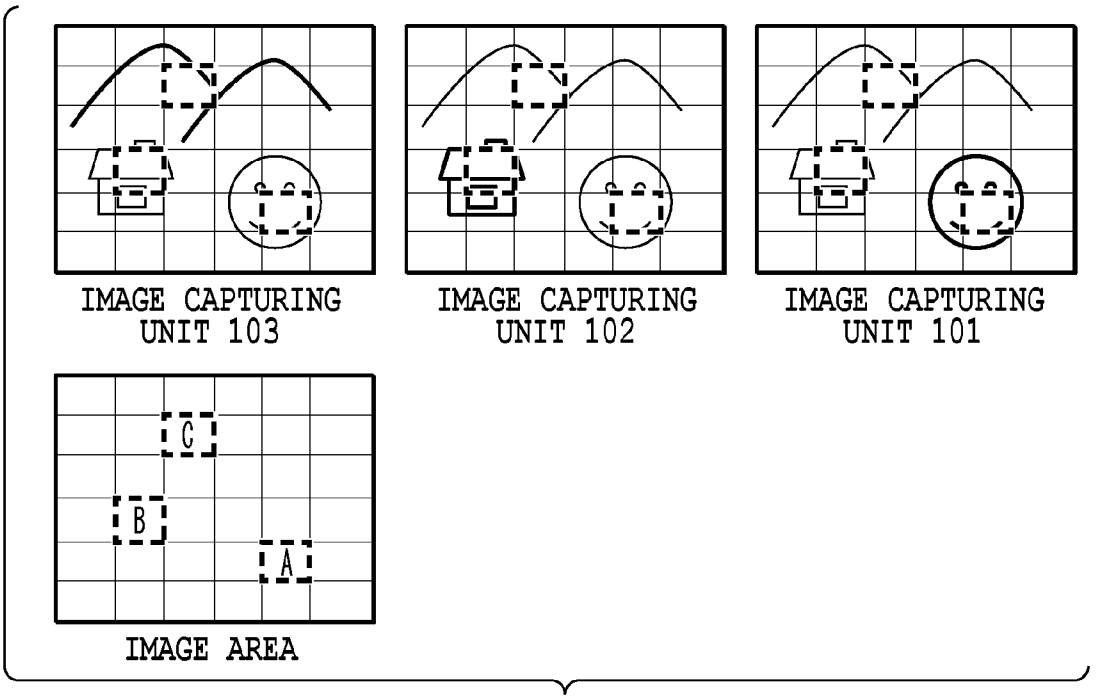

FIG.16A

CONTRAST VALUES IN DIVIDED AREAS

	A	B	C
IMAGE CAPTURING UNIT 101	0.783	0.536	0.565
IMAGE CAPTURING UNIT 102	0.333	0.697	0.571
IMAGE CAPTURING UNIT 103	0.552	0.481	0.683
IMAGE CAPTURING UNIT 104	0.556	0.485	0.333
IMAGE CAPTURING UNIT 105	0.714	0.340	0.283
IMAGE CAPTURING UNIT 106	0.560	0.694	0.489
IMAGE CAPTURING UNIT 107	0.585	0.540	0.569
IMAGE CAPTURING UNIT 108	0.340	0.576	0.701
IMAGE CAPTURING UNIT 109	0.575	0.544	0.750

FIG.16B

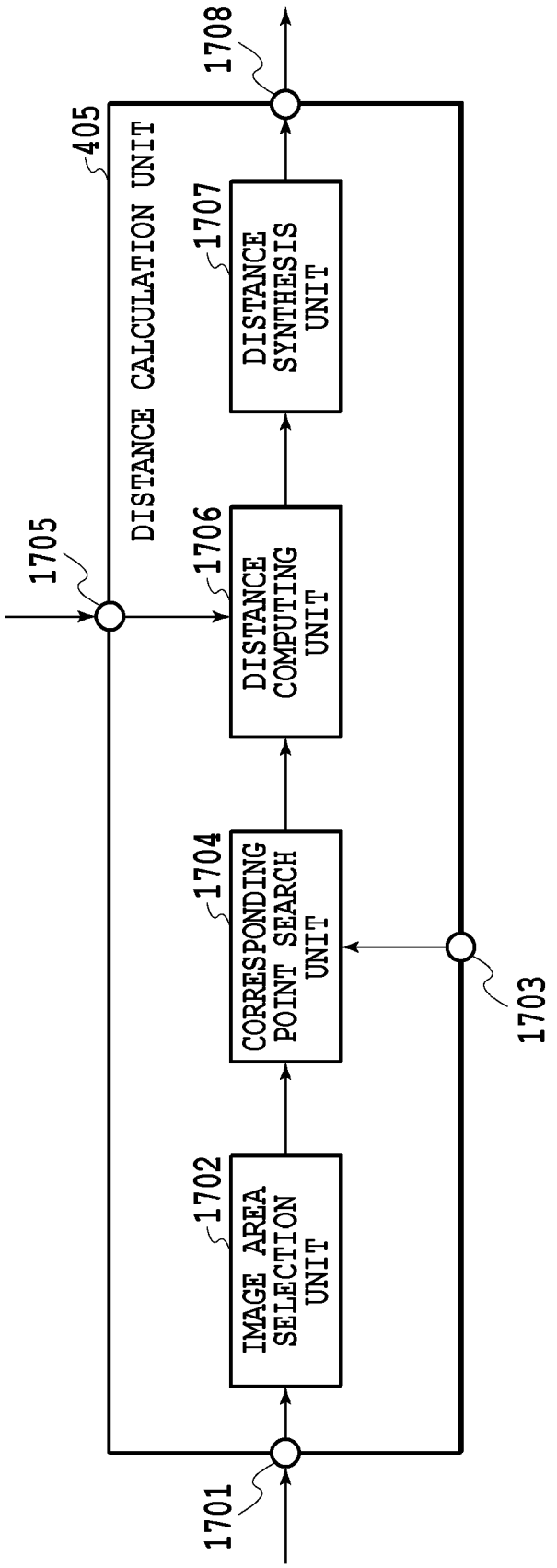
1708
405
DISTANCE CALCULATION UNIT
1707
DISTANCE SYNTHESIS UNIT
1705
1706
DISTANCE COMPUTING UNIT
1704
CORRESPONDING POINT SEARCH UNIT
1703
1702
IMAGE AREA SELECTION UNIT
1701

FIG.17

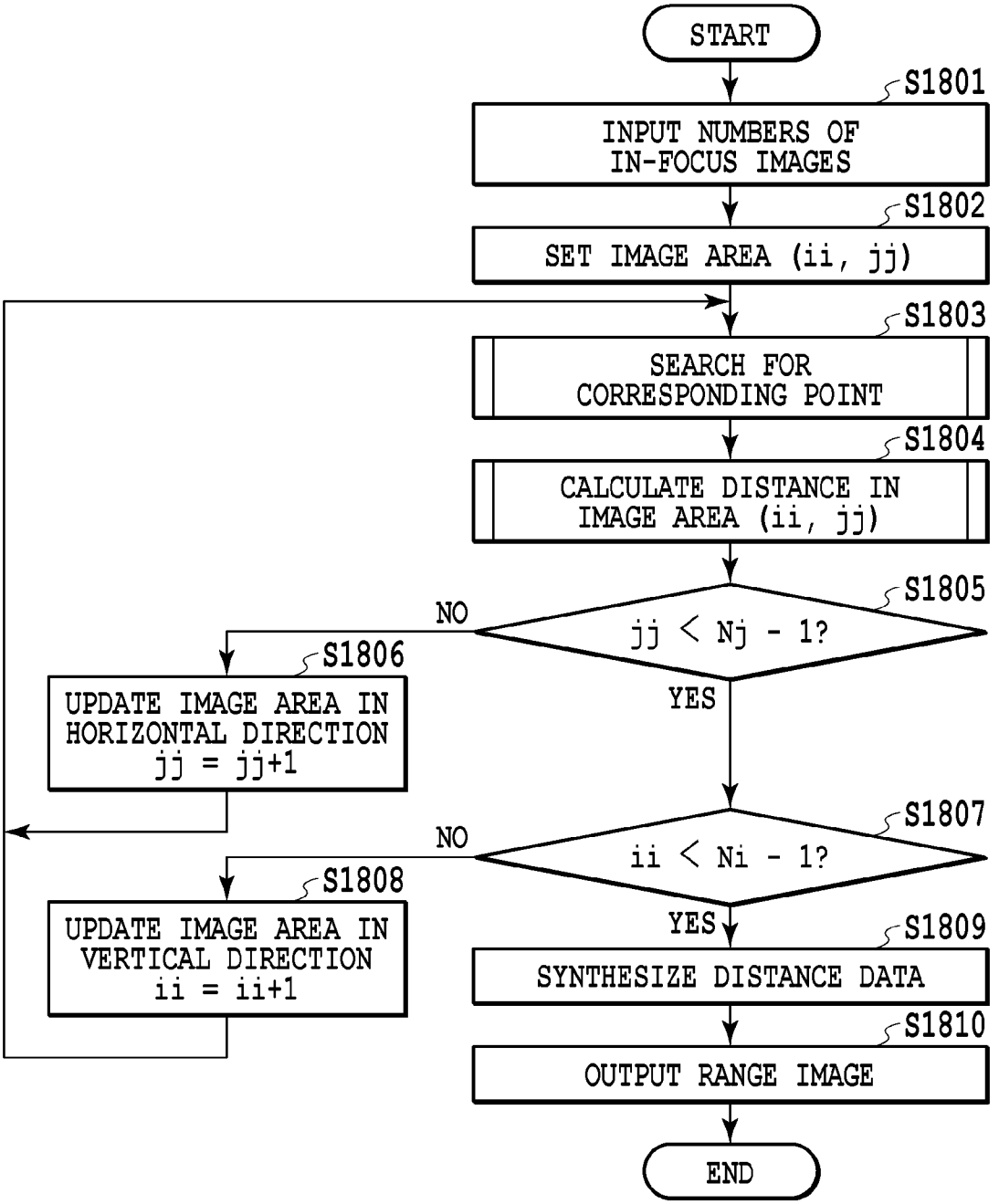
START
S1801
INPUT NUMBERS OF IN-FOCUS IMAGES
S1802
SET IMAGE AREA (ii, jj)
S1803
SEARCH FOR CORRESPONDING POINT
S1804
CALCULATE DISTANCE IN IMAGE AREA (ii, jj)
S1805
jj < Nj - 1?
NO
YES
S1806
UPDATE IMAGE AREA IN HORIZONTAL DIRECTION jj = jj+1
S1807
ii < Ni - 1?
NO
YES
S1808
UPDATE IMAGE AREA IN VERTICAL DIRECTION ii = ii+1
S1809
SYNTHESIZE DISTANCE DATA
S1810
OUTPUT RANGE IMAGE
END

FIG.18

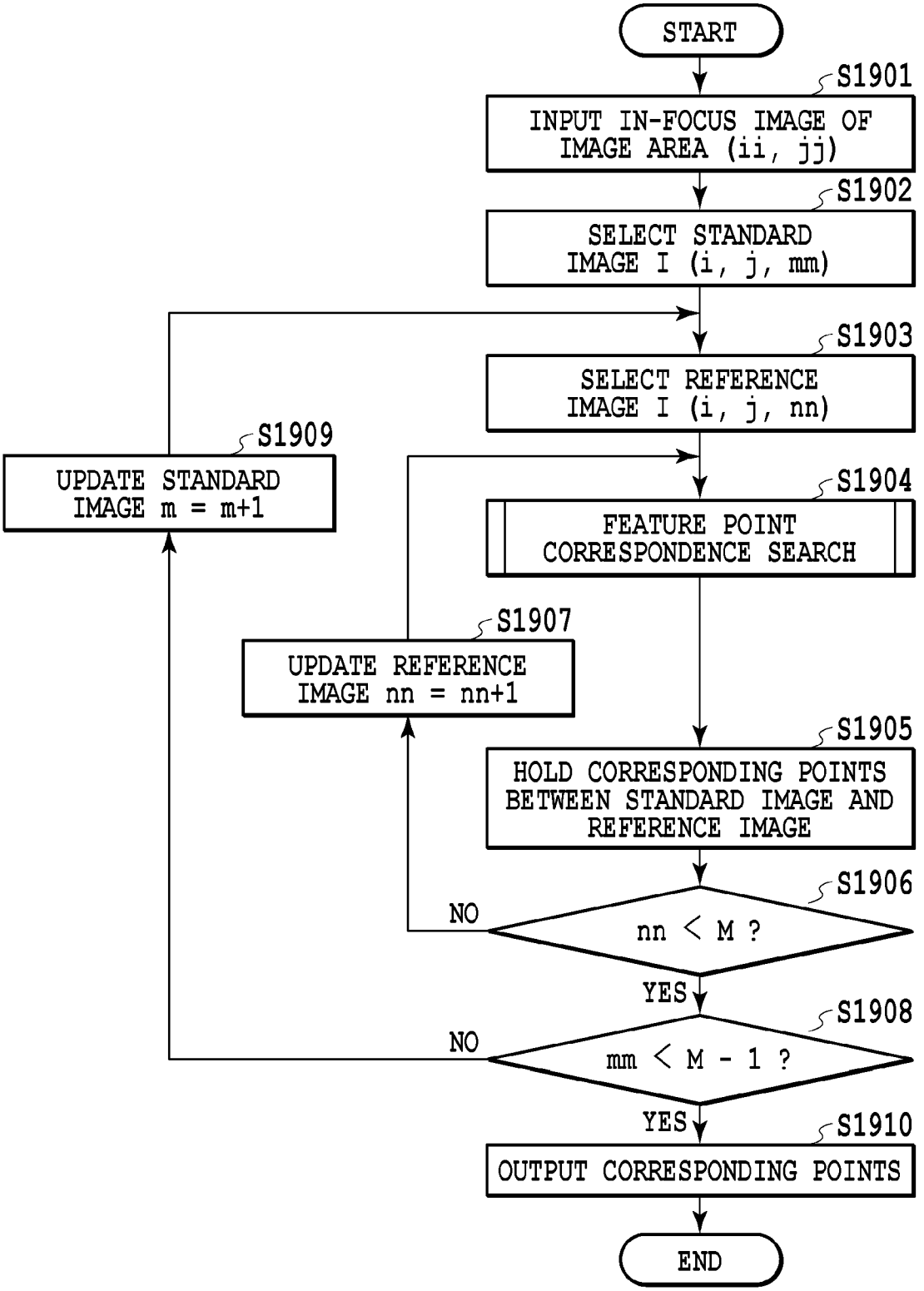
START
S1901
INPUT IN-FOCUS IMAGE OF IMAGE AREA (ii, jj)
S1902
SELECT STANDARD IMAGE I (i, j, mm)
S1903
SELECT REFERENCE IMAGE I (i, j, nn)
S1904
FEATURE POINT CORRESPONDENCE SEARCH
S1905
HOLD CORRESPONDING POINTS BETWEEN STANDARD IMAGE AND REFERENCE IMAGE
S1906
nn < M ?
NO
YES
S1907
UPDATE REFERENCE IMAGE nn = nn+1
S1908
mm < M - 1 ?
NO
YES
S1909
UPDATE STANDARD IMAGE m = m+1
S1910
OUTPUT CORRESPONDING POINTS
END

FIG.19

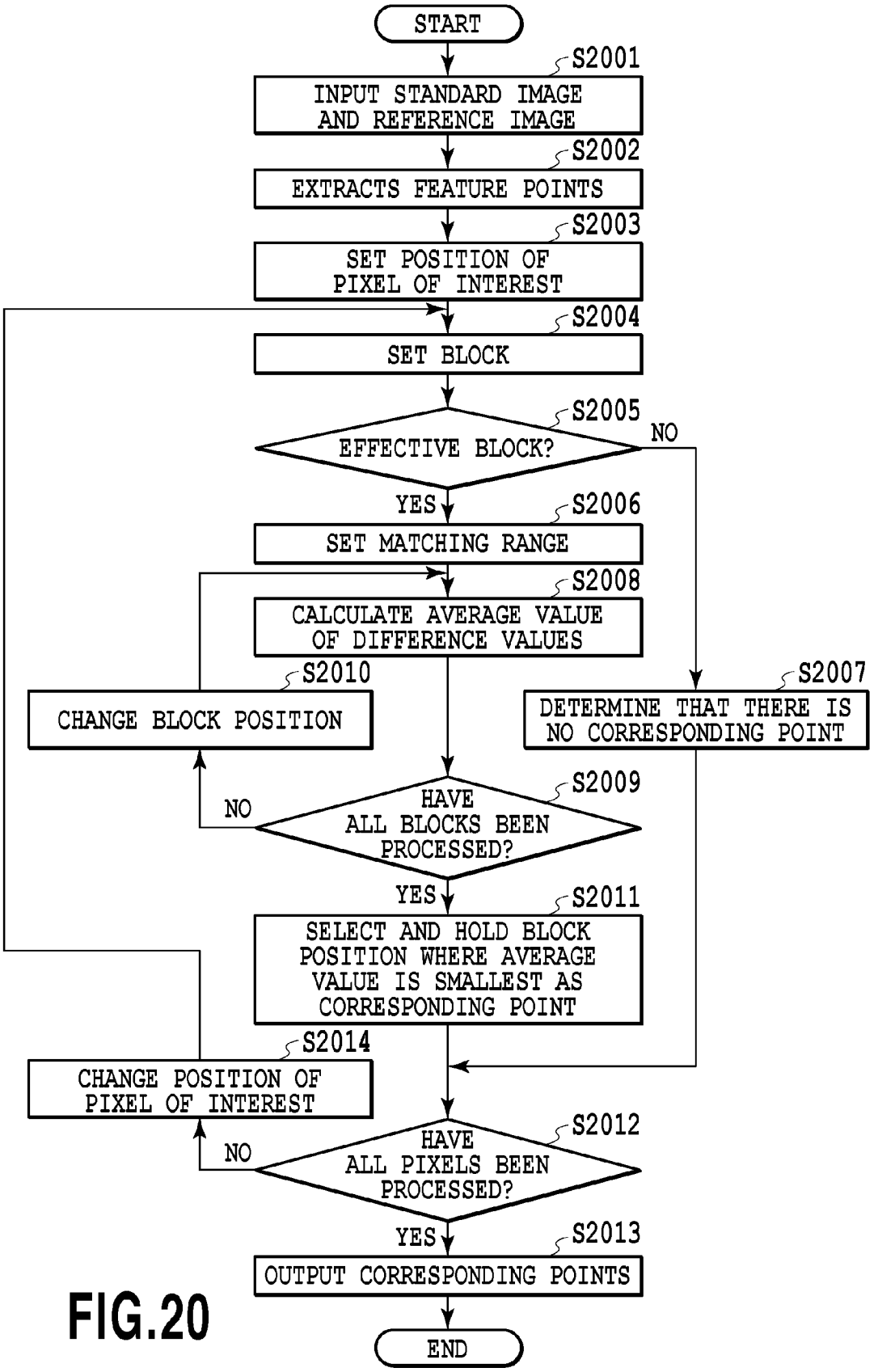
START
S2001
INPUT STANDARD IMAGE AND REFERENCE IMAGE
S2002
EXTRACTS FEATURE POINTS
S2003
SET POSITION OF PIXEL OF INTEREST
S2004
SET BLOCK
S2005
EFFECTIVE BLOCK?
NO
YES
S2006
SET MATCHING RANGE
S2008
CALCULATE AVERAGE VALUE OF DIFFERENCE VALUES
S2010
CHANGE BLOCK POSITION
S2007
DETERMINE THAT THERE IS NO CORRESPONDING POINT
S2009
HAVE ALL BLOCKS BEEN PROCESSED?
NO
YES
S2011
SELECT AND HOLD BLOCK POSITION WHERE AVERAGE VALUE IS SMALLEST AS CORRESPONDING POINT
S2014
CHANGE POSITION OF PIXEL OF INTEREST
S2012
HAVE ALL PIXELS BEEN PROCESSED?
NO
YES
S2013
OUTPUT CORRESPONDING POINTS
END

FIG.20

FIG.21A

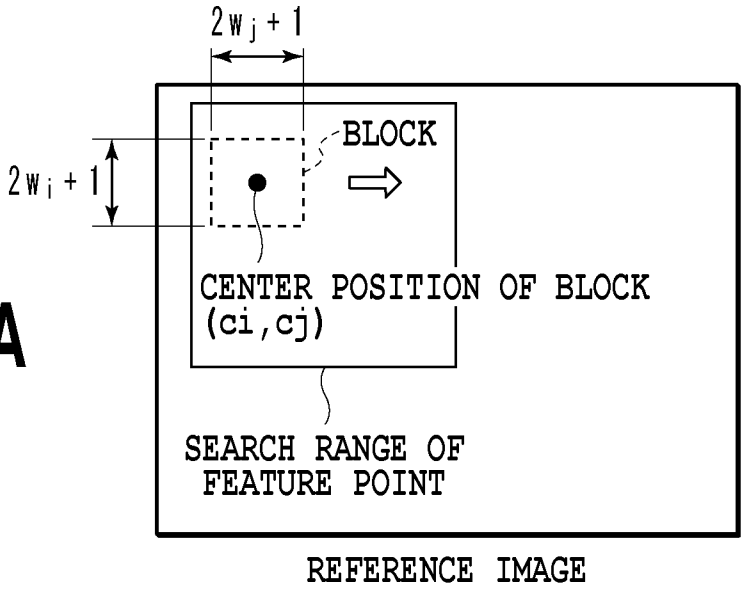

FIG.21B

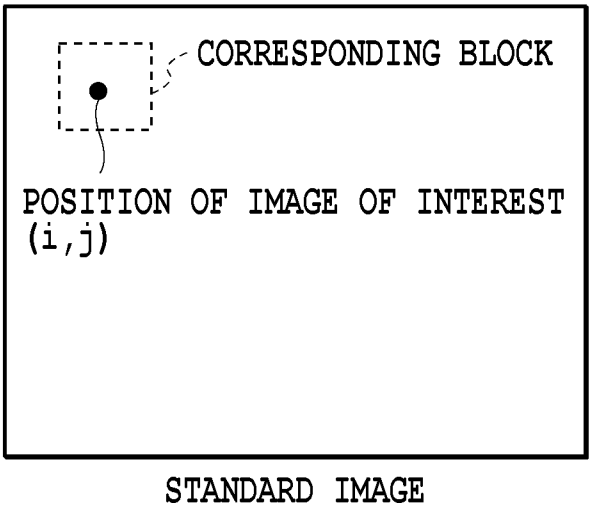

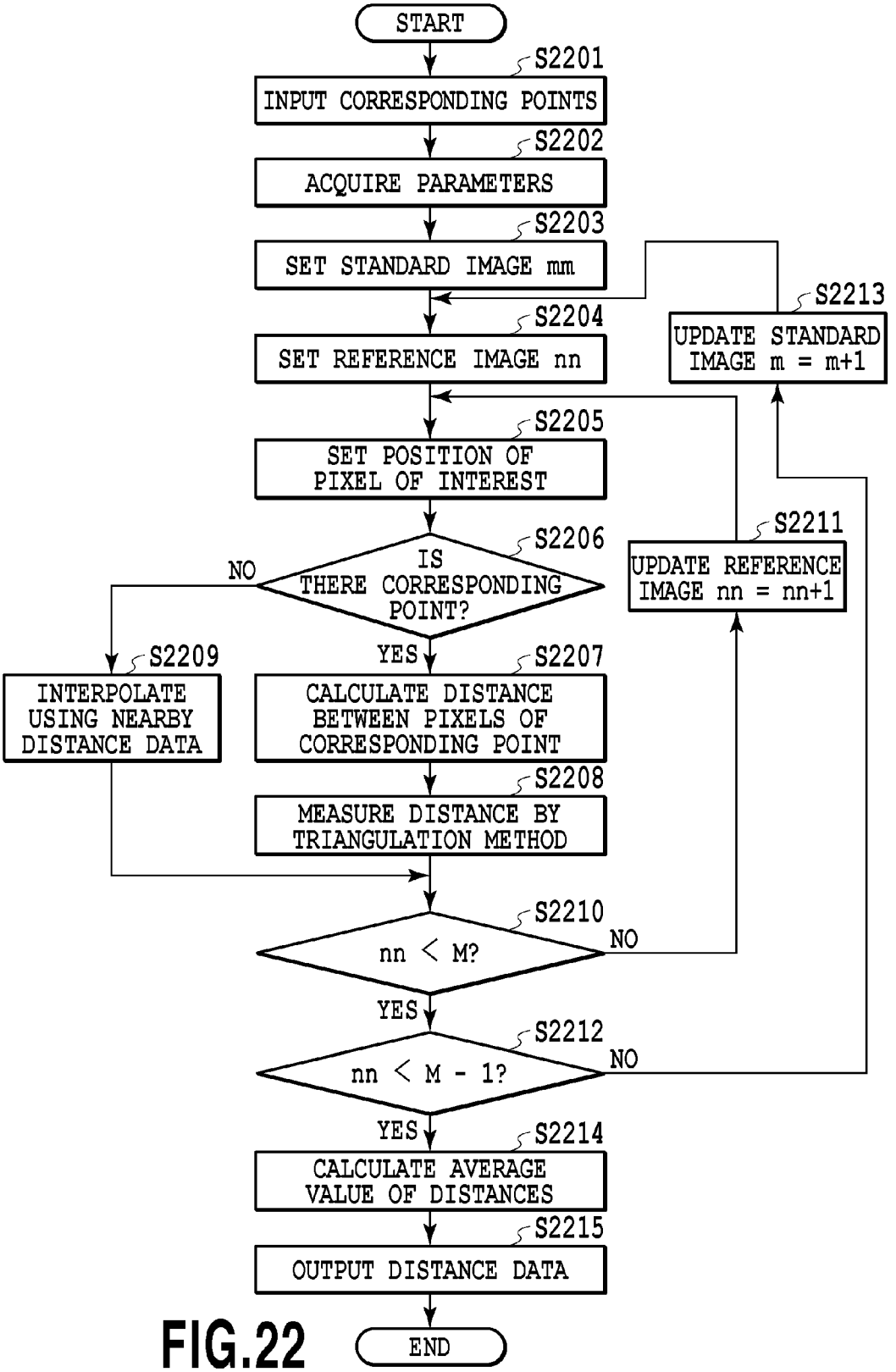
START
S2201
INPUT CORRESPONDING POINTS
S2202
ACQUIRE PARAMETERS
S2203
SET STANDARD IMAGE mm
S2204
SET REFERENCE IMAGE nn
S2205
SET POSITION OF PIXEL OF INTEREST
S2206
IS THERE CORRESPONDING POINT?
NO
YES
S2209
INTERPOLATE USING NEARBY DISTANCE DATA
S2207
CALCULATE DISTANCE BETWEEN PIXELS OF CORRESPONDING POINT
S2208
MEASURE DISTANCE BY TRIANGULATION METHOD
S2210
nn < M?
NO
YES
S2212
nn < M - 1?
NO
YES
S2214
CALCULATE AVERAGE VALUE OF DISTANCES
S2215
OUTPUT DISTANCE DATA
END
S2211
UPDATE REFERENCE IMAGE nn = nn+1
S2213
UPDATE STANDARD IMAGE m = m+1

FIG.22

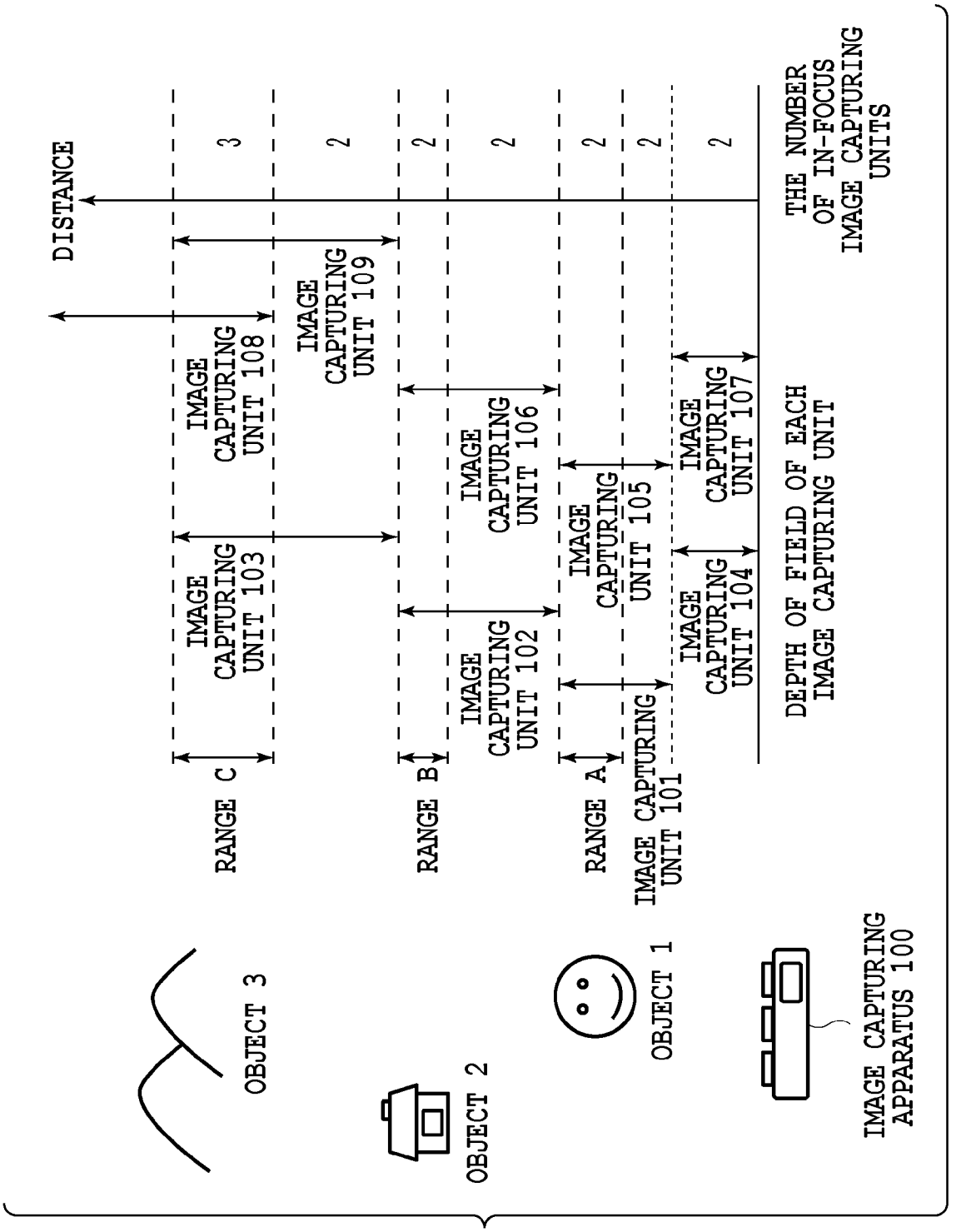
DISTANCE
3
2
2
2
2
2
2
THE NUMBER OF IN-FOCUS IMAGE CAPTURING UNITS
IMAGE CAPTURING UNIT 108
IMAGE CAPTURING UNIT 109
IMAGE CAPTURING UNIT 106
IMAGE CAPTURING UNIT 107
IMAGE CAPTURING UNIT 103
IMAGE CAPTURING UNIT 105
IMAGE CAPTURING UNIT 104
IMAGE CAPTURING UNIT 102
DEPTH OF FIELD OF EACH IMAGE CAPTURING UNIT
RANGE C
RANGE B
RANGE A
IMAGE CAPTURING UNIT 101
OBJECT 3
OBJECT 2
OBJECT 1
IMAGE CAPTURING APPARATUS 100

FIG.23

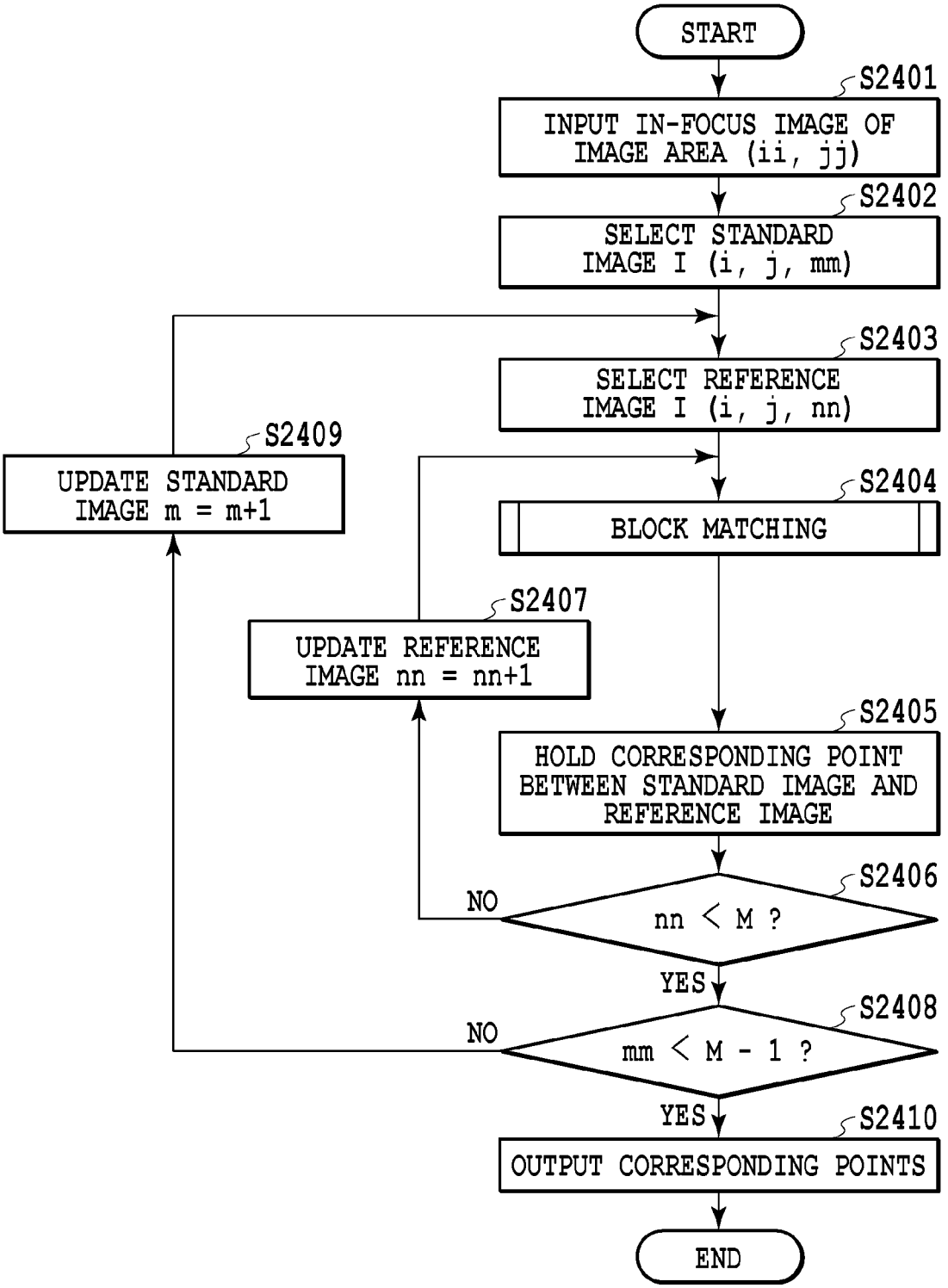
START
S2401
INPUT IN-FOCUS IMAGE OF IMAGE AREA (ii, jj)
S2402
SELECT STANDARD IMAGE I (i, j, mm)
S2403
SELECT REFERENCE IMAGE I (i, j, nn)
S2404
BLOCK MATCHING
S2405
HOLD CORRESPONDING POINT BETWEEN STANDARD IMAGE AND REFERENCE IMAGE
S2406
nn < M ?
NO
YES
S2407
UPDATE REFERENCE IMAGE nn = nn+1
S2408
mm < M - 1 ?
NO
YES
S2409
UPDATE STANDARD IMAGE m = m+1
S2410
OUTPUT CORRESPONDING POINTS
END

FIG.24

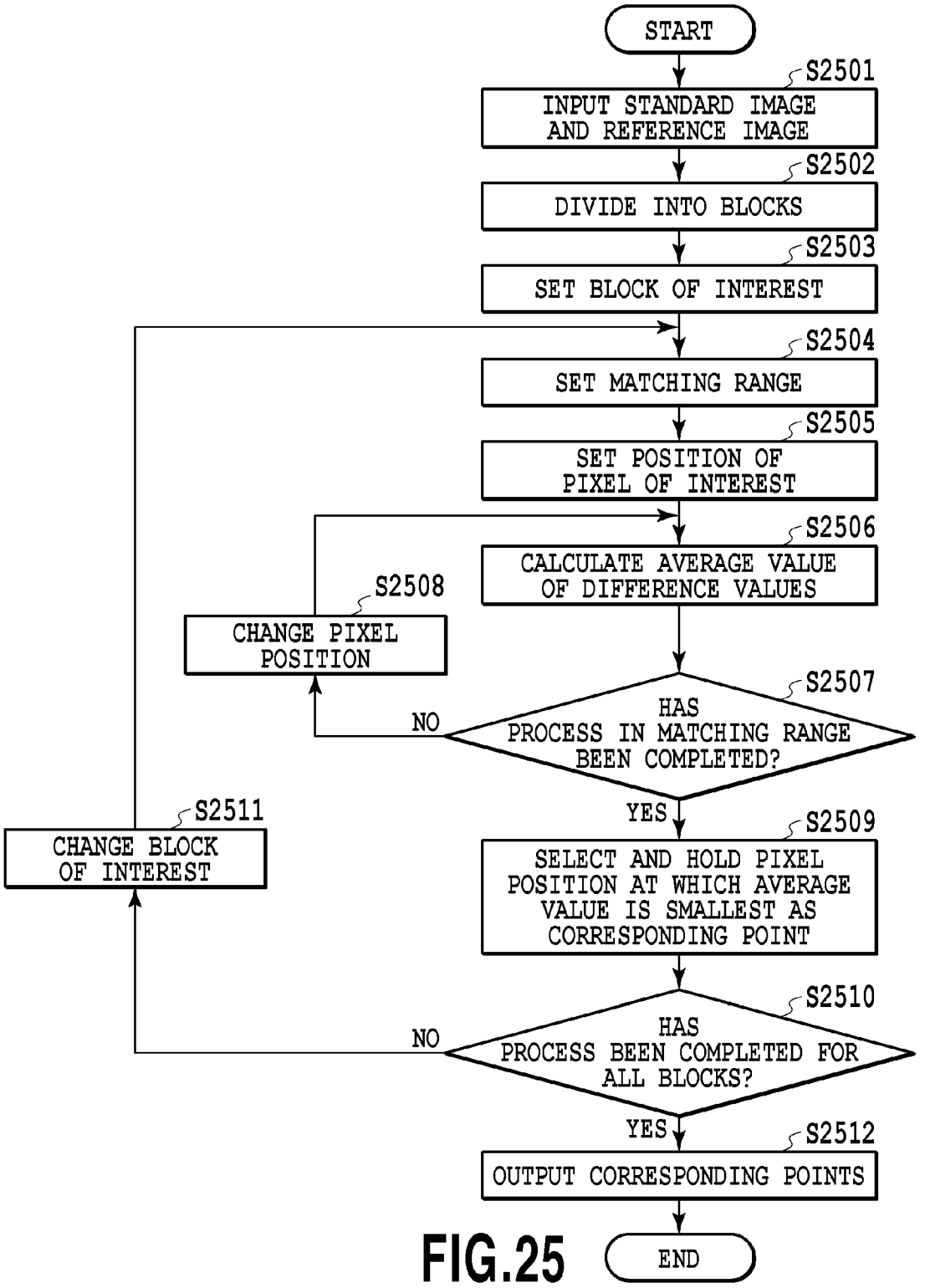
START
S2501
INPUT STANDARD IMAGE AND REFERENCE IMAGE
S2502
DIVIDE INTO BLOCKS
S2503
SET BLOCK OF INTEREST
S2504
SET MATCHING RANGE
S2505
SET POSITION OF PIXEL OF INTEREST
S2506
CALCULATE AVERAGE VALUE OF DIFFERENCE VALUES
S2508
CHANGE PIXEL POSITION
S2507
HAS PROCESS IN MATCHING RANGE BEEN COMPLETED?
NO
YES
S2509
SELECT AND HOLD PIXEL POSITION AT WHICH AVERAGE VALUE IS SMALLEST AS CORRESPONDING POINT
S2511
CHANGE BLOCK OF INTEREST
S2510
HAS PROCESS BEEN COMPLETED FOR ALL BLOCKS?
NO
YES
S2512
OUTPUT CORRESPONDING POINTS
END

FIG.25

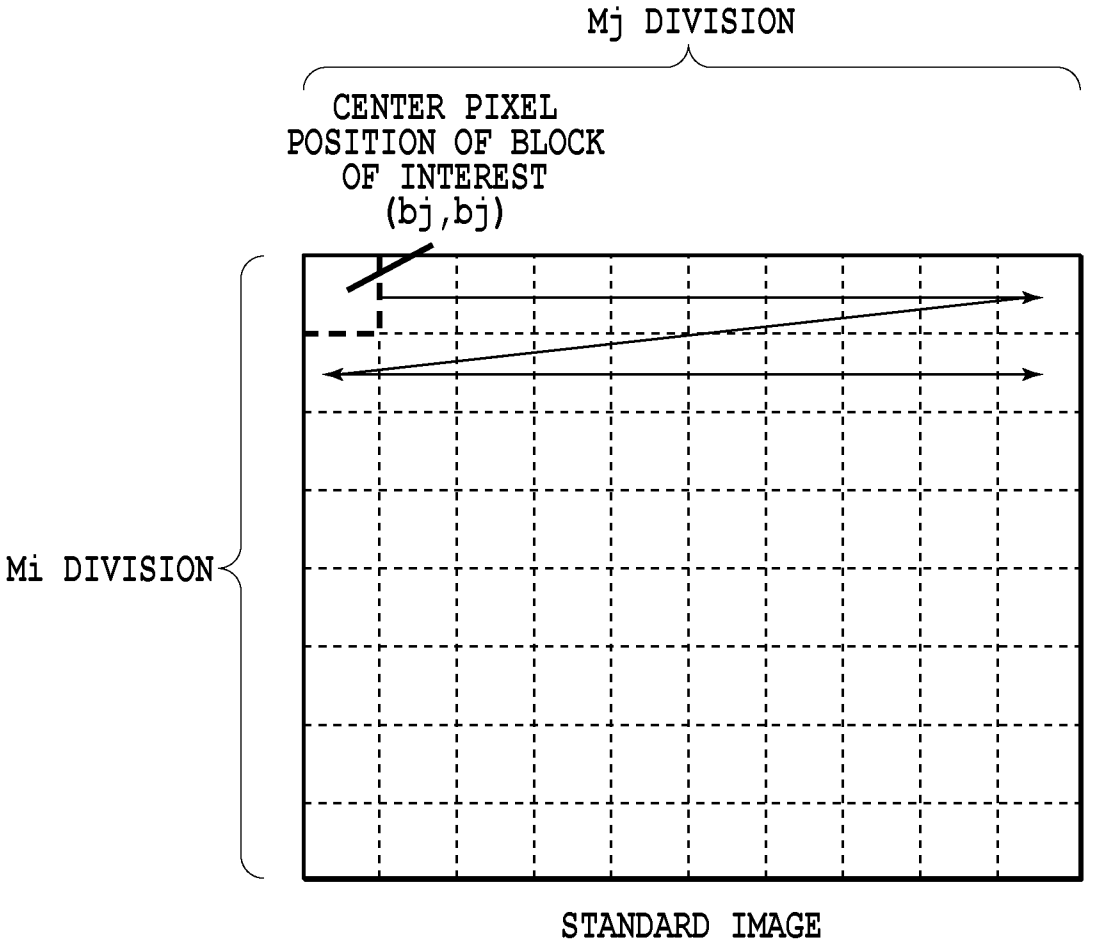
Mj DIVISION
CENTER PIXEL POSITION OF BLOCK OF INTEREST (bj,bj)
Mi DIVISION
STANDARD IMAGE

FIG.26

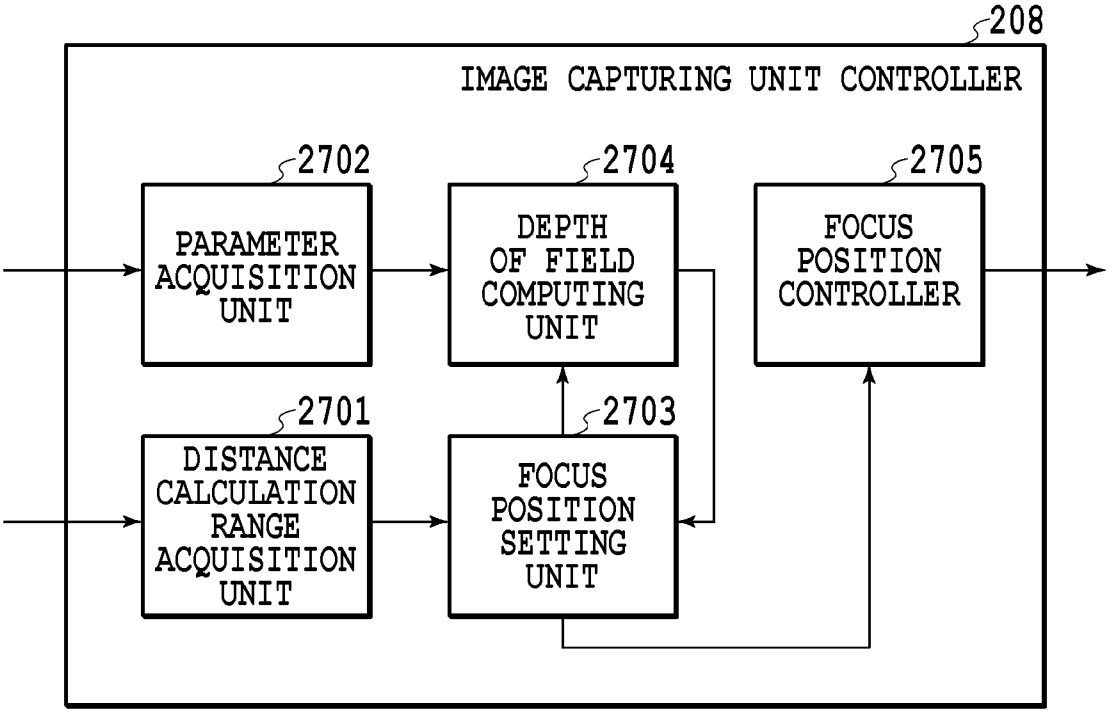
208
IMAGE CAPTURING UNIT CONTROLLER
2702
PARAMETER ACQUISITION UNIT
2704
DEPTH OF FIELD COMPUTING UNIT
2705
FOCUS POSITION CONTROLLER
2701
DISTANCE CALCULATION RANGE ACQUISITION UNIT
2703
FOCUS POSITION SETTING UNIT

FIG.27

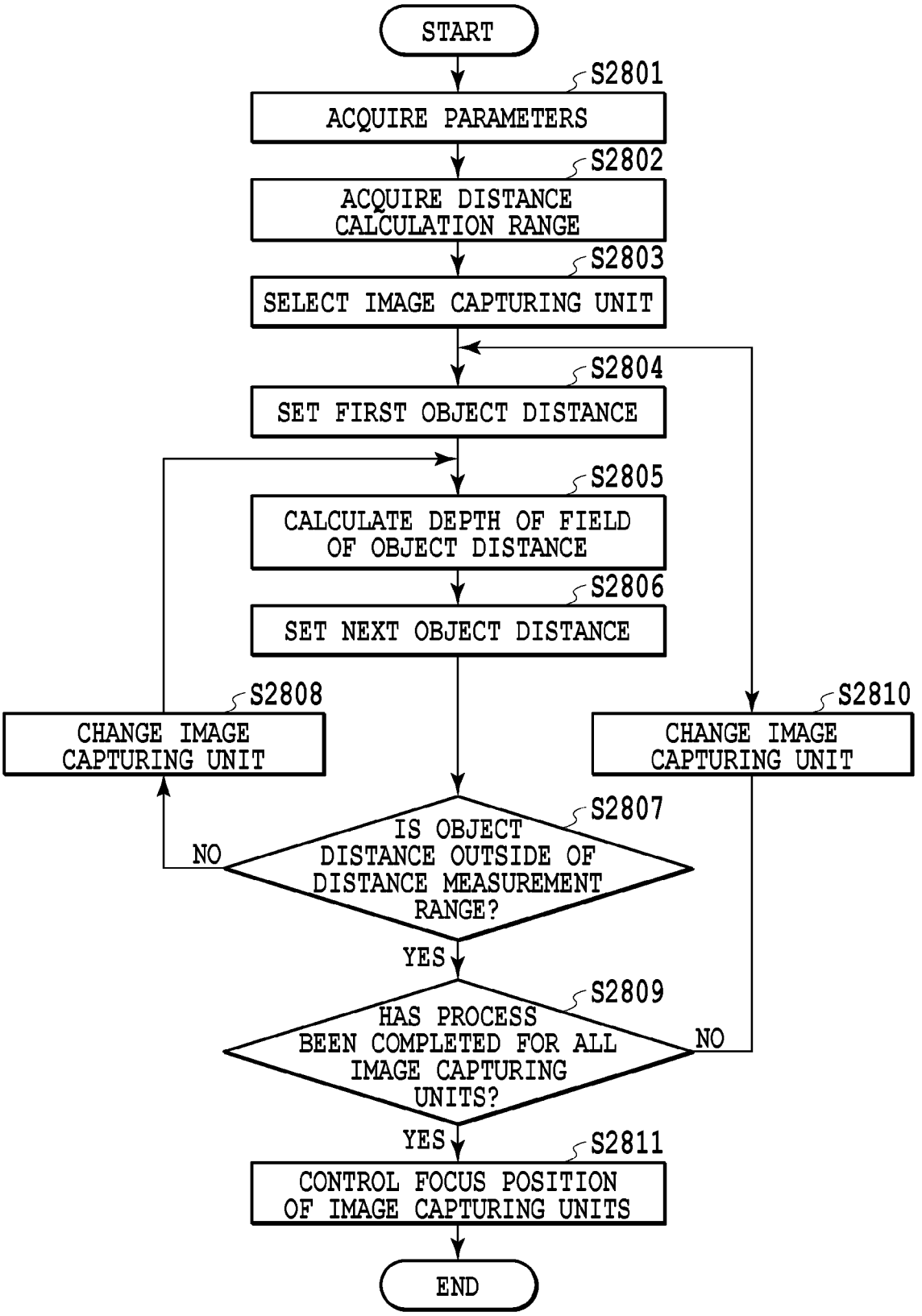
START
S2801
ACQUIRE PARAMETERS
S2802
ACQUIRE DISTANCE CALCULATION RANGE
S2803
SELECT IMAGE CAPTURING UNIT
S2804
SET FIRST OBJECT DISTANCE
S2805
CALCULATE DEPTH OF FIELD OF OBJECT DISTANCE
S2806
SET NEXT OBJECT DISTANCE
S2808
CHANGE IMAGE CAPTURING UNIT
S2810
CHANGE IMAGE CAPTURING UNIT
S2807
IS OBJECT DISTANCE OUTSIDE OF DISTANCE MEASUREMENT RANGE?
NO
YES
S2809
HAS PROCESS BEEN COMPLETED FOR ALL IMAGE CAPTURING UNITS?
NO
YES
S2811
CONTROL FOCUS POSITION OF IMAGE CAPTURING UNITS
END

FIG.28

	FOCUS POSITION (m)	DEPTH OF FIELD (m)	
		FRONT	REAR
IMAGE CAPTURING UNIT 101	1.00	0.85	1.21
IMAGE CAPTURING UNIT 102	1.21	1.00	1.54
IMAGE CAPTURING UNIT 103	1.54	1.21	2.12
IMAGE CAPTURING UNIT 104	2.12	1.54	3.39
IMAGE CAPTURING UNIT 105	3.39	2.12	8.45
IMAGE CAPTURING UNIT 106	1.00	0.85	1.21
IMAGE CAPTURING UNIT 107	1.21	1.00	1.54
IMAGE CAPTURING UNIT 108	1.54	1.21	2.12
IMAGE CAPTURING UNIT 109	2.12	1.54	3.39

FIG.29

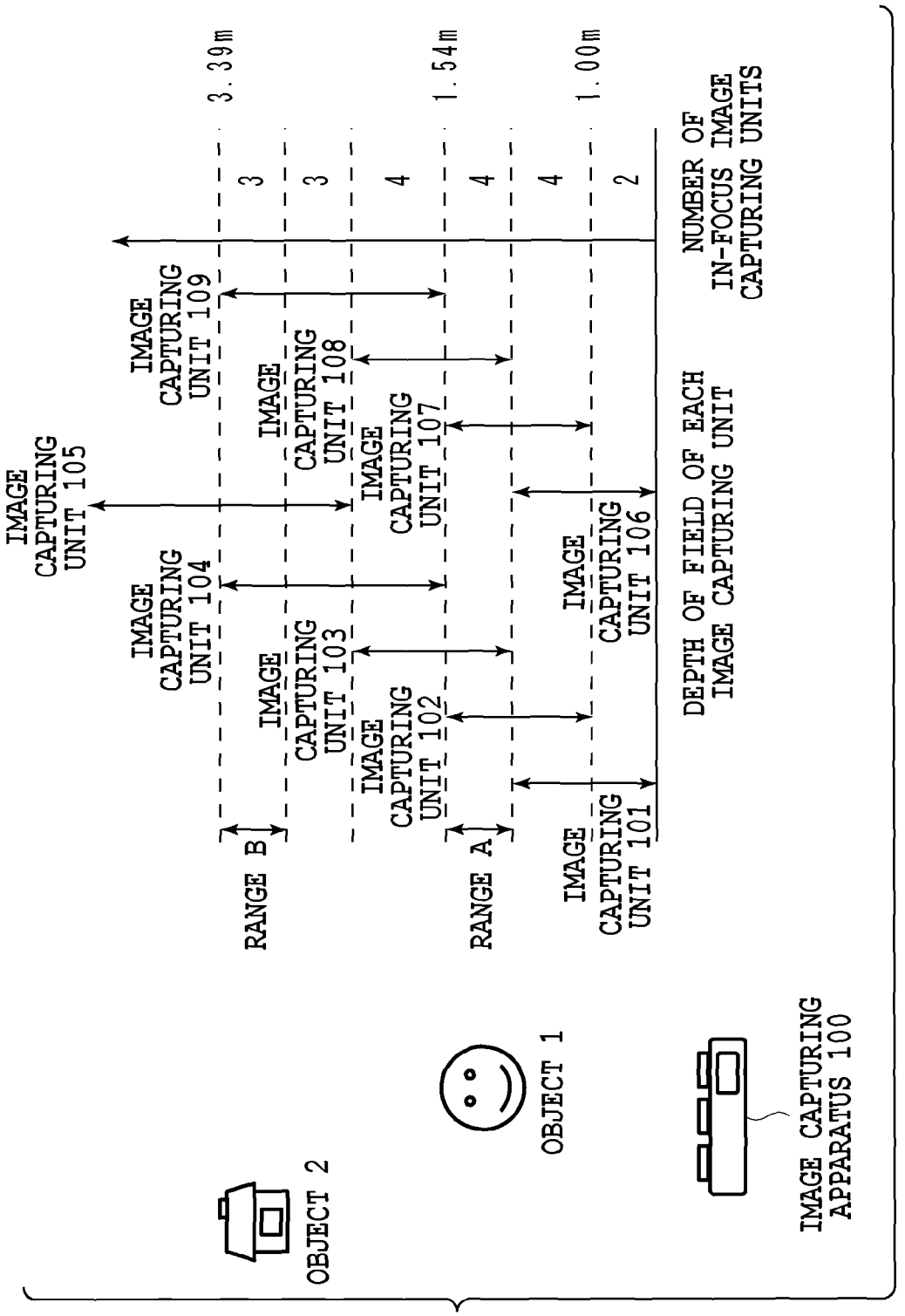
IMAGE CAPTURING UNIT 105
IMAGE CAPTURING UNIT 104
IMAGE CAPTURING UNIT 109
IMAGE CAPTURING UNIT 103
IMAGE CAPTURING UNIT 108
IMAGE CAPTURING UNIT 102
IMAGE CAPTURING UNIT 107
IMAGE CAPTURING UNIT 101
IMAGE CAPTURING UNIT 106
RANGE B
RANGE A
3.39m
1.54m
1.00m
3
3
4
4
4
2
DEPTH OF FIELD OF EACH IMAGE CAPTURING UNIT
NUMBER OF IN-FOCUS IMAGE CAPTURING UNITS
OBJECT 2
OBJECT 1
IMAGE CAPTURING APPARATUS 100

FIG.30

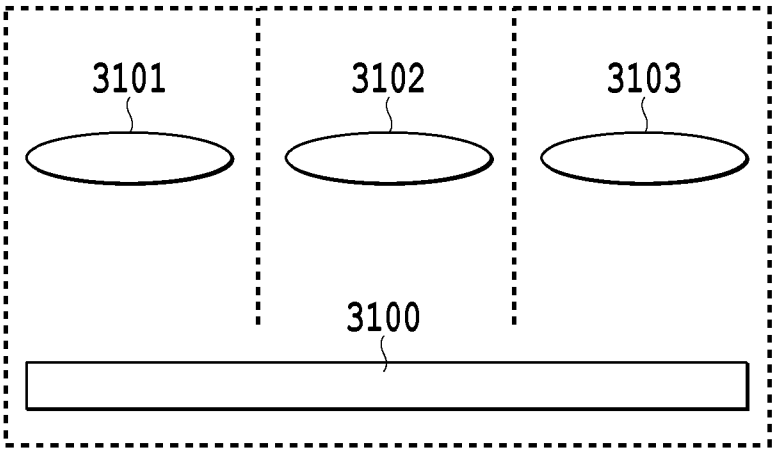

DIAGRAM OF IMAGE CAPTURING UNIT AS SEEN FROM SIDE

FIG.31A

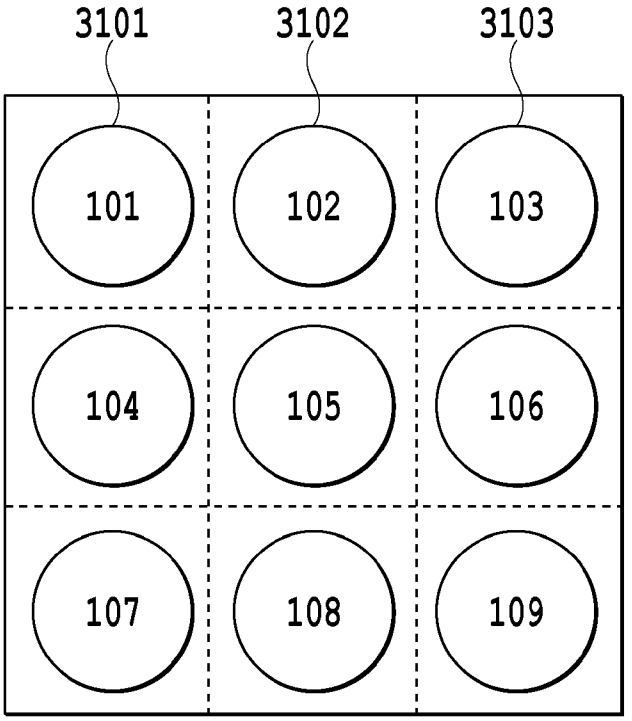

DIAGRAM OF IMAGE CAPTURING UNIT AS SEEN FROM FRONT

FIG.31B

IMAGE ACQUISITION APPARATUS AND IMAGE PROCESSING APPARATUS USING SELECTED IN-FOCUS IMAGE DATA

BACKGROUND OF THE INVENTION

1. Field of the Invention

The present invention relates to an image processing apparatus, and a image acquisition apparatus for providing a range image based on an image group acquired by a camera array image capturing device.

2. Description of the Related Art

Conventionally, there is a distance measurement apparatus which measures a distance between an object and a camera on the basis of a plurality of images which are captured from different viewpoints by using a plurality of optical systems. As a method for measuring a distance between an object and a camera, a stereo matching process which is based on a correlation between images and which uses a plurality of images having parallax that are captured by a stereo camera, is known. Further, Japanese Patent Laid-Open No. 2008-196891 discloses a camera array stereo matching process which measures a distance using three or more images captured from different viewpoints in order to improve distance measurement accuracy.

As another distance measuring method, a method for measuring a distance between a main object and a camera by a so-called contrast method which measures the distance on the basis of a plurality of object images captured by shifting the focus position is known. A method for measuring a distance between a main object and a camera, which is extended from the above method to a camera array method including a plurality of optical systems, is disclosed by Japanese Patent Laid-Open No. 2009-216600. In this method, a distance to the main object is measured by the contrast method based on a plurality of object images captured by an image capturing apparatus including a plurality of optical systems having different focus positions. Compared with a method for acquiring a plurality of object images while changing the focus position by using a single-view image capturing apparatus, the method of Patent Document 2 using the camera array method has an advantage that a plurality of object images having different focus positions can be acquired by one-time image capturing.

However, the method proposed by Japanese Patent Laid-Open No. 2008-196891 has problems that (1) the resolution of a distance map decreases in an image area different from the focus position and (2) the accuracy of distance estimation degrades when the depth of field is increased. Regarding the former problem, although a substantially focused image is obtained by driving a lens to adjust the focus position when the object is located at a distant place, when the object is located at a nearby place, the image is out of focus and an image with a low resolution is captured. If a distance is measured based on such an image out of focus, the resolution of an obtained range image decreases. Regarding the latter problem, although it can be considered to reduce the lens diameter to increase the depth of field of the image capturing system and capture a all-focused image, if the lens diameter is reduced, the amount of incident light to the lens decreases and noise included in a captured image increases. If a distance is measured based on an image including a lot of noise, there is a problem that the accuracy of distance estimation degrades.

The method proposed by Japanese Patent Laid-Open No. 2009-216600 is limited to measurement of distance to the main object, and if there is a background in a position different from the main object, there is a problem that distance measurement of an entire image including the main object and the background cannot be realized.

SUMMARY OF THE INVENTION

To solve the above problems, an image acquisition apparatus according to the present invention includes a first image capturing unit group including a plurality of image capturing units in which at least part of in-focus distance ranges overlap each other and a second image capturing unit group including a plurality of image capturing units in which at least part of in-focus distance ranges overlap each other. The second image capturing unit group is different from the first image capturing unit group. A first object distance to an object is obtained from image data acquired by the first image capturing unit group and a second object distance different from the first object distance is obtained from image data acquired by the second image capturing unit group.

The present invention has an effect to provide a range image including a main object and a background from an image group acquired by a camera array image capturing device.

Further features of the present invention will become apparent from the following description of exemplary embodiments with reference to the attached drawings.

BRIEF DESCRIPTION OF THE DRAWINGS

FIG. **1** is a diagram showing an example of a camera array image capturing device including a plurality of image capturing units;

FIG. **2** is a block diagram showing an internal configuration of the camera array image capturing device;

FIGS. **3**A and **3**B are diagrams showing an internal configuration of the image capturing unit;

FIG. **4** is a block diagram showing an internal configuration of an image processing unit according to a first embodiment;

FIG. **5** is a flowchart showing a process flow in the image processing unit according to the first embodiment;

FIG. **6** is a block diagram showing an internal configuration of an in-focus image selection unit according to the first embodiment;

FIG. **7** is a flowchart showing a flow of an in-focus image selection process;

FIG. **8** is a diagram showing an example of area division;

FIG. **9** is a flowchart showing a flow of an overlap area calculation process;

FIG. **10** is a diagram showing an example of a transition process of m and n until the overlap areas are calculated without omission;

FIGS. **11**A to **11**C are diagrams for explaining the overlap area;

FIG. **12** is a diagram for explaining an all-overlap area;

FIGS. **13**A and **13**B are diagrams showing an example of the overlap area (the all-overlap area) in the first embodiment;

FIG. **14** is a flowchart showing a contrast calculation process;

FIG. **15** is a flowchart showing a flow of an image selection process;

FIGS. **16**A and **16**B are diagrams showing an example of contrast values in a captured image and an image area;

FIG. **17** is a block diagram showing an internal configuration of a distance calculation unit according to the first embodiment;

FIG. **18** is a flowchart showing a process flow of the distance calculation unit;

FIG. **19** is a flowchart showing a flow of a corresponding point search process according to the first embodiment;

FIG. **20** is a flowchart showing a flow of a search process of a feature point;

FIGS. **21**A and **21**B are diagrams for explaining the search process of a feature point;

FIG. **22** is a flowchart showing a flow of a distance calculation process;

FIG. **23** is a diagram showing an example of a range of the depth of field of the image capturing unit;

FIG. **24** is a flowchart showing a flow of a corresponding point search process according to a second embodiment;

FIG. **25** is a flowchart showing a flow of a block matching process;

FIG. **26** is a diagram for explaining the block matching process;

FIG. **27** is a block diagram showing an internal configuration of an image capturing unit controller according to a third embodiment;

FIG. **28** is a flowchart showing a process flow in the image capturing unit controller according to the third embodiment;

FIG. **29** is a diagram showing an example of the focus position of image capturing and the front and rear depths of field;

FIG. **30** is a diagram showing an example of a range of the depth of field of an image capturing unit according to the third embodiment; and

FIGS. **31**A and **31**B are diagrams showing an internal configuration of an image capturing unit according to a fourth embodiment.

DESCRIPTION OF THE EMBODIMENTS

(First Embodiment)

FIG. **1** is a diagram showing an example of a camera array image capturing device including a plurality of image capturing units. Reference numeral **100** denotes a housing of the image capturing apparatus. The housing **100** includes nine image capturing units **101** to **109** that acquire a color image and an image capturing button **110**. The nine image capturing units are uniformly arranged in a square lattice shape. When a user presses the image capturing button **110**, light information of an object received by sensors (image capturing devices) included in the image capturing unit **101** to **109** is A/D converted and a plurality of color images (digital data) can be acquired at the same time. By using such a camera array image capturing device, a color image group obtained by capturing images of the same object from a plurality of viewpoints can be obtained.

Although, here, the number of the image capturing units is nine, the number of the image capturing units is not limited to nine. The present invention can be applied as long as the image capturing apparatus includes a plurality of image capturing units.

Although, here, an example in which nine image capturing units are uniformly arranged in a square lattice shape is described, the image capturing units can be arranged arbitrarily. For example, the nine image capturing units may be arranged radially or linearly or may be arranged at random.

FIG. **2** is a block diagram showing an internal configuration of the image capturing apparatus **100**. A CPU **201** is a central processing unit (CPU) and integrally controls units described below.

A RAM **202** functions as a main memory and a work area and the like for the CPU **201**.

A ROM **203** stores a control program and the like which is executed by the CPU **201**.

A bus **204** functions as a transfer path of various data. For example, digital data acquired by the image capturing units **101** to **109** is transmitted to a predetermined processing unit through the bus **204**.

An operation unit **205** includes a button, a mode dial, and the like and receives a user's instruction.

A display unit **206** is, for example, a liquid crystal display and displays a captured image or characters. The display unit **206** may include a touch screen function. In this case, a user instruction input from the touch screen can be used as input from the operation unit **205**.

A display controller **207** performs display control to cause the display unit **206** to display a captured image and characters.

An image capturing unit controller **208** controls an image capturing system based on an instruction from the CPU **201**, such as focusing on an object, opening or closing a shutter to capture an image, and adjusting an aperture.

A digital signal processing unit **209** performs various processes, such as a white balance process, a gamma process, and a noise reduction process, on digital data received through the bus **204**.

An encoder unit **210** performs a process for converting digital data into a file format of JPEG, MPEG, and the like.

An external memory controller **211** is an interface for connecting to a PC and other media (for example, hard disk, memory card, CF card, SD card, and USB memory).

An image processing unit **212** performs a process for calculating a distance from a color image group acquired by the image capturing units **101** to **109** or a color image group output from the signal processing unit **208**. The details of the image processing unit **212** will be described later.

Although the image capturing apparatus includes constituent elements other than those described above, they are not major components of the present invention, so that the description thereof will be omitted.

FIG. **3**A is a diagram showing an internal configuration of the image capturing units **101** to **109**. Each of the image capturing units **101** to **109** includes lenses **301** to **303**, an aperture **304**, a shutter **305**, an optical low pass filter **306**, an iR cut filter **307**, a color filter **308**, a sensor **309**, and an A/D converter **310**. More specifically, the lenses **301** to **303** are a zoom lens **301**, a focus lens **302**, and a camera shake correction lens **303**. The focus lens of each of the image capturing units **101** to **109** is placed at a different position in an optical system for each image capturing unit. Therefore, the focus lenses are set so that the focus distances of the image capturing units are different from each other. The sensor **309** is, for example, a CMOS sensor, a CCD sensor, or the like. When the sensor **309** detects an amount of light of an object, the detected amount of light is converted into a digital value by the A/D conversion unit **310** and output to the bus **204** as digital data.

FIG. **3**B shows an example of the positions at which the focus lenses **302** are arranged in the image capturing units **101** to **103**. The focus lens in the image capturing unit **101** is disposed at a position far from the sensor **309**. On the other hand, the focus lens in the image capturing unit **103** is disposed at a position near to the sensor **309**. The focus lenses in the image capturing units **104** to **109** not shown in FIG. **3**B are also disposed at positions different from each other.

FIG. **23** shows an example of ranges of the depth of field (ranges in which an object is in-focus) of the image capturing units **101** to **109** whose focus distances are different from each other.

The left side of FIG. **23** shows a relationship between the image capturing apparatus **100** and the objects. FIG. **23** is a

diagram for explaining a case in which three types of objects (object **1**, object **2**, and object **3**) are respectively located at different positions from the image capturing apparatus. As shown in FIG. **23**, the object **1** is located at a position nearest to the image capturing unit and the object **3** is located at a position farthest from the image capturing unit.

The right side of FIG. **23** shows the ranges of the depth of field of the image capturing units and the number of image capturing units that are in a range of the depth of field at each distance. For example, the focus positions of the image capturing units **101** and **105** are set so that a range A in which the object **1** is located is included in the depths of field of the image capturing units **101** and **105**. Also, the focus positions of the image capturing units **102** and **106** are set so that a range B in which the object **2** is located is included in the depths of field of the image capturing units **102** and **106**. Also, the focus positions of the image capturing units **103**, **108**, and **109** are set so that a range C in which the object **3** is located is included in the depths of field of the image capturing units **103**, **108**, and **109**.

In the present embodiment, the focus positions of the image capturing units are set so that the depths of field of at least two image capturing units overlap each other at any distance from the image capturing unit to the object. As shown in FIG. **23**, it is not necessary to set the focus positions of all the image capturing units to be different from each other. In other words, the focus positions of a plurality of image capturing units may be coincident with each other.

<Configuration Diagram of Image Processing Unit>

FIG. **4** is a block diagram showing an internal configuration of the image processing unit **212**.

An image acquisition unit **401** acquires a color image group supplied from the image capturing units **101** to **109** through the bus **204**. A monochrome conversion unit **402** converts the color image group supplied from the image acquisition unit **401** into a monochrome image group. A memory unit **407** temporarily stores the monochrome image group supplied from the monochrome image conversion unit **402**. A parameter acquisition unit **403** acquires various parameters of the image capturing units **101** to **109** when an image is captured. The parameters include, for example, a focal length of the image capturing unit, an aperture value (F number), a sensor size, the number of pixels of the sensor, a focus length (a distance between a main lens and the sensor), a relative position between the image capturing units, and the like. An in-focus image selection unit **404** selects a focused (hereinafter referred to as "in-focus") image from monochrome images stored in the memory unit **407** by using parameters supplied from the parameter acquisition unit **403**. The details of the in-focus image selection unit **404** will be described later. A distance calculation unit **405** calculates a distance to the object by using parameters supplied from the parameter acquisition unit **403**, an image determined to be in focus by the in-focus image selection unit **404**, and monochrome images stored in the memory unit **407** and outputs the distance. The details of the distance calculation unit **405** will be described later.

Next, the details of image processing performed by the units **401** to **407** included in the image processing unit **212** will be described.

FIG. **5** is a flowchart showing a flow of the image processing by the image processing unit **212**.

In step **501**, the image acquisition unit **401** acquires color images from the image capturing units **101** to **109**. In the present embodiment, there are nine image capturing units, so that nine color images, which are digital data, are input.

In step **502**, the monochrome image conversion unit **402** converts an input color image into a monochrome image. In step **502**, RGB values of each pixel of the color image are converted into brightness values corresponding to the RGB values.

In step **503**, the memory unit **407** stores the monochrome image converted by the monochrome image conversion unit **402** and temporarily holds the monochrome image.

In step **504**, the parameter acquisition unit **403** acquires parameters related to the image capturing units **101** to **109**.

In step **505**, the in-focus image selection unit **404** selects an in-focus image from monochrome images supplied from the monochrome image conversion unit **402** by using the acquired parameters.

In step **506**, the distance calculation unit **405** calculates a distance to the object by using acquired parameters and the monochrome image which is determined to be in focus.

Finally, in step **507**, distance data generated by the distance calculation unit **405** is output and the image processing is completed.

As described above, the image processing is performed by the image processing unit **212**, so that it is possible to provide an accurate range image.

Next, the details of the selection process of the in-focus image (S**505**) and the distance calculation process (S**506**) will be described in order.

<Configuration Diagram of In-Focus Image Selection Unit **404**>

FIG. **6** is a block diagram showing an internal configuration of the in-focus image selection unit **404**.

An image input terminal **601** inputs monochrome images stored in the memory unit **407**. A parameter input terminal **602** inputs parameters acquired by the parameter acquisition unit **403**. An overlap area calculation unit **603** calculates an area where the angles of view of the image capturing units overlap each other (hereinafter referred to as "overlap area") by using parameters supplied from the parameter input terminal **602**. An area division unit **604** divides the area calculated by the overlap area calculation unit **603** into a plurality of sub-areas. A contrast calculation unit **605** calculates contrast in each sub-area image divided by the area division unit **604**. An image selection unit **606** selects an in-focus image for each divided sub-area by using contrast values calculated by the contrast calculation unit **605**. An image output terminal **607** outputs an in-focus image in each divided sub-area.

Next, the details of selection processing performed by each component **601** to **607** included in the in-focus image selection unit **404** will be described.

FIG. **7** is a flowchart showing a flow of the process in the in-focus image selection unit **404**.

In step **701**, an image input terminal **601** inputs monochrome images stored in the memory unit **407**.

In step **702**, the parameter input terminal **602** inputs parameters acquired by the parameter acquisition unit **403**.

In step **703**, the overlap area calculation unit **603** calculates an overlap area by using the acquired parameters. The details of the calculation method of the overlap area will be described later.

In step **704**, the area division unit **604** divides the image area calculated by the overlap area calculation unit **603** into Ni×Nj sub-areas. Here, Ni indicates the number of divisions in the vertical direction. Nj indicates the number of divisions in the horizontal direction.

FIG. **8** shows an example of an image divided by the area division unit **604**. FIG. **8** shows that an image is divided into six areas in the vertical direction (Ni=6) and divided into six areas in the horizontal direction (Nj=6). The number of

divided areas (Ni, Nj) is not limited to 6×6 (Ni=Nj=6) in the vertical and horizontal directions. The number of divisions may be greater than 6 or smaller than 6. For example, the number of divisions may be increased to 16 or may be decreased to 4. Further, the number of divisions in the vertical direction need not correspond to the number of divisions in the horizontal direction. For example, while the number of divisions in the vertical direction is still 6, the number of divisions in the horizontal direction may be changed to 10.

Let us return to the description of the flowchart in FIG. **7**. When the division process of the image area is completed in step **704**, in step **705**, the contrast calculation unit **605** calculates a contrast value in each divided area. The process of the calculation method of the contrast value will be described later.

In step **706**, the image selection unit **606** selects an in-focus image for each divided area by using contrast values calculated by the contrast calculation unit **605**. The process of the selection method of an in-focus image will be described later.

Finally, in step **707**, when the output terminal **607** outputs an in-focus image in which focused images selected in each divided area are combined, the process is completed.

<Calculation Process of Overlap Area>

The details of the overlap area calculation process performed in step **703** in the flowchart of FIG. **7** will be described. FIG. **9** is a flowchart showing a flow of the overlap area calculation process.

In step **901**, the overlap area calculation unit **603** receives the aforementioned parameters related to the image capturing units **101** to **109** from the parameter acquisition unit **403**.

In step **902**, the overlap area calculation unit **603** selects one standard image I (i, j, m), where an overlap area is desired to be calculated, from a plurality of monochrome image groups stored in the memory unit **407**. Here, (i, j) is a variable representing a coordinate position on an image and m is a variable representing a number of the standard image, which starts from an initial value 0. The standard image selected in step **902** is a first selected standard image and, here, an image of I (i, j, 0) is selected.

In step **903**, the overlap area calculation unit **603** selects one reference image I (i, j, n) to be compared with the standard image. Here, n is a variable representing a number of the reference image. The reference image selected in step **903** is a first selected reference image and the initial value of n is set to n=m+1. Here, the initial value of m is 0, so that an image of I (i, j, 1) is selected.

In step **907** and step **911** described below, the reference image and the standard image will be updated. The maximum value of m is N−2 and the maximum value of n is N−1 in a camera array image capturing device including N image capturing units.

FIG. **10** is a diagram showing a transition process of m and n until the overlap areas are calculated without omission in the case of the image capturing apparatus including nine image capturing unit shown in FIG. **1**. For example, when m is the initial value 0, n may be a value from 1 to 8 and an overlap area is calculated for eight combinations indicated by solid lines a to h. The above process is repeated until m becomes (9−2=) 7. An overlap area need not be calculated again for the combinations that have been already acquired. Therefore, as the value of m increases, the number of combinations where an overlap area is calculated decreases one by one, and when m is 7, an overlap area is calculated only for one combination indicated by a dashed line i.

Let us return to the description of the flowchart in FIG. **9**. In step **904**, the overlap area calculation unit **603** calculates an overlap area between a selected standard image I (i, j, m) and a reference image I (i, j, n) on the basis of input parameters. In the first step **904** immediately after starting the process, the overlap area between a standard image (i, j, 0) and a reference image I (i, j, 1) is calculated.

FIGS. **11**A to **11**C are diagrams for explaining the overlap area calculated in step **904**. For simplicity of description, FIGS. **11**A to **11**C are schematic diagrams developed in a two-dimensional plane. In FIGS. **11**A and **11**B, the standard image is an image (i, j, 0) captured by the image capturing unit **101** and the reference image is an image (i, j, 1) captured by the image capturing unit **102**.

FIG. **11**A shows a state in which the image capturing unit **101** and the image capturing unit **102**, which have the same specification and whose in-focus positions are set to be different from each other, are juxtaposed with an interval lx in the x direction. (Sx, Sy) indicates the sizes of the sensor in the (x, y) directions. A symbol d_s is a focus length (a distance between the main lens and the sensor). A symbol d_{obj} is a virtual focus length (a distance between the camera and a certain virtual plane). An area enclosed by dotted lines is an image capturing area of the camera, that is, the angle of view, which is determined by the sensor size and the focal length ds. A line segment of [P_{10}, P_{21}] corresponds to a side of the overlap area in the x (horizontal) direction and the length wx of the side can be obtained by the formula 1.

$$w_x = \frac{d_{obj}}{d_s} S_x - l_x \quad \text{(Formula 1)}$$

FIG. **11**B shows an example of an image (an image capturing range) captured by the image capturing unit **101**, an image (an image capturing range) captured by the image capturing unit **102**, and the overlap area of both images. An area surrounded by four points [P_{10}, P_{11}, P_{12}, P_{13}] is the image capturing range of the image capturing unit **101**. An area surrounded by four points [P_{20}, P_{21}, P_{22}, P_{23}] is the image capturing range of the image capturing unit **102**. A shaded area surrounded by four points [P_{10}, P_{21}, P_{22}, P_{13}] is the overlap area. A line segment of [P_{10}, P_{21}] corresponds to a side of the overlap area on a sensor surface in the x (horizontal) direction and the number of pixels n_w of the side can be obtained by the formula 2.

$$n_w = n_x\left(1 - \frac{d_x l_x}{d_{obj} s_x}\right) \quad \text{(Formula 2)}$$

Here, n_x is the number of horizontal pixels.

As described above, the image capturing unit **101** and the image capturing unit **102** are juxtaposed in the x direction, so that the same number of pixels as the number of vertical pixels n_y of the sensor are included in the vertical overlap range.

FIG. **11**C shows an example of the overlap area when the two cameras are juxtaposed in the y direction. FIG. **11**C shows an image (an image capturing range) captured by the image capturing unit **101**, an image (an image capturing range) captured by the image capturing unit **104**, and the overlap area of both images. An area surrounded by four points [P_{10}, P_{11}, P_{12}, P_{13}] is the image capturing range of the image capturing unit **101** and an area surrounded by four points [P_{30}, P_{31}, P_{32}, P_{33}] is the image capturing range of the image capturing unit **104**. A shaded area surrounded by four points [P_{30}, P_{31}, P_{12}, P_{13}] is the overlap area. A line segment of [P_{30}, P_{13}] corresponds to a side of the overlap area on a

sensor surface in the y (vertical) direction and the number of pixels n_h of the side can be obtained by the formula 3.

$$n_h = n_y\left(1 - \frac{d_s l_y}{d_{obj} s_y}\right) \quad \text{(Formula 3)}$$

Here, n_y is the number of vertical pixels.

In this way, the overlap area between the standard image and the reference image is calculated in step **904**.

In step **905**, the overlap area calculation unit **603** stores data of the calculated overlap area in a memory.

In step **906**, the overlap area calculation unit **603** determines whether or not the calculation of the overlap area is completed for all the reference images, that is, whether or not n reaches N−1. If the calculation of the overlap area is completed for all the reference images, the overlap area calculation unit **603** proceeds to step **908**. On the other hand, if there is an unprocessed reference image (in the case of n<N−1), the overlap area calculation unit **603** proceeds to step **907**. In step **907**, the overlap area calculation unit **603** increments the value of n (n=n+1), updates the reference image, and returns to step **904**.

In this way, the process from step **904** to step **906** is repeated until n reaches N−1. In step **908**, the overlap area calculation unit **603** calculates a common area where all the overlap areas obtained for one standard image I (i, j, m) overlap each other (hereinafter referred to as "all-overlap area").

FIG. **12** is a diagram for explaining the all-overlap area. Here, for convenience of the description, the image capturing areas of only three image capturing units **101**, **102**, and **104** are shown. However, if there are nine image capturing units, the all-overlap area corresponding to the image capturing areas of all the image capturing units is obtained.

The overlap areas of the three image capturing units **101**, **102**, and **104** are the areas shown in FIGS. **11**B and **11**C, so that an area where the two overlap areas overlap each other, that is, the shaded area surrounded by four points [P_a, P_{31}, P_{22}, P_{13}], is the all-overlap area in this case.

In step **909**, the overlap area calculation unit **603** stores data of the all-overlap area for one standard image (i, j, m) obtained as described above in a memory.

In step **910**, the overlap area calculation unit **603** determines whether or not the calculation of the all-overlap area is completed for all the standard images, that is, whether or not m reaches N−2. If the calculation of the all-overlap area is completed for all the standard images, the overlap area calculation unit **603** proceeds to step **912**. On the other hand, if there is an unprocessed standard image (in the case of m<N−2), the overlap area calculation unit **603** proceeds to step **911**. In step **911**, the overlap area calculation unit **603** increments the value of m (m=m+1), updates the standard image, and returns to step **903**. In this way, the process from step **903** to step **910** is repeated until m reaches N−2.

In step **912**, the overlap area calculation unit **603** outputs the all-overlap areas for each of the standard images. In this way, the overlap area calculation process in step **703** in the flowchart of FIG. **7** is performed.

Although, for convenience of the description, in FIGS. **11**A to **11**C and FIG. **12**, the image capturing ranges of the standard image and the reference image are shown, this does not necessarily mean that the calculation process of the overlap area in the overlap area calculation unit **603** is performed after actually receiving captured images that will be the standard image and the reference image. In other words, the overlap area calculation unit **603** may perform the calculation process of the overlap area after actually receiving captured images that will be the standard image and the reference image or may calculate the overlap area by only receiving parameters necessary to calculate the overlap area shown in formulas 1 to 3.

FIGS. **13**A to **13**B show an example of the overlap area (the all-overlap area) obtained when there are nine image capturing units. FIG. **13**A shows a relationship between the image capturing units and the objects. In FIG. **13**A, three types of objects (object **1**, object **2**, and object **3**) are located at positions apart from the image capturing units **101** to **103** by different distances, respectively. The object **1** is located at a position nearest to the image capturing units and the object **3** is located at a position farthest from the image capturing units. FIG. **13**B shows the all-overlap areas in images captured by the nine image capturing units **101** to **109**. An area enclosed by a dotted line is the all-overlap area in each image capturing unit. The all-overlap area is defined in this way, so that the same image capturing area can be determined from images captured from different viewpoints.

<Calculation Process of Contrast>

FIG. **14** is a flowchart showing a flow of the contrast calculation process in step **705** in FIG. **7**.

First, in step **1401**, the contrast calculation unit **605** inputs images related to the overlap area in each image captured by the image capturing units **101** to **109**, which is calculated by the overlap area calculation unit **603**.

In step **1402**, the overlap area calculation unit **605** selects one image area (ii, jj), where the contrast is desired to be calculated, from the image areas divided by the area division unit **604**. Here, (ii, jj) are variables representing a coordinate position of a divided area. As described in FIG. **8**, the area division unit **604** divides an image into Ni areas in the vertical direction and divides the image into Nj areas in the horizontal direction, so that the variables ii and jj vary in a manner such as ii=[0, 1, . . . , Ni−1] and jj=[0, 1, . . . , Nj−1]. Here, first, an image of (ii, jj)=(0, 0) is selected.

In step **1403**, the contrast calculation unit **605** selects one standard image I (i, j, m) where the contrast is desired to be calculated. Here, (i, j) is a variable representing a coordinate position on an image and m is a variable representing a number of the standard image, which starts from an initial value 0. The standard image I (i, j, m) used by the contrast calculation unit **605** is digital data of a monochrome image corresponding to a standard image number m among the monochrome images supplied from the image input terminal **601**. The standard image selected in step **1403** is a first selected standard image and, here, an image of I (i, j, 0) is selected.

In step **1404**, the contrast calculation unit **605** calculates a histogram based on values of pixels in the image area (ii, jj) in the standard image I (i, j, m).

In step **1405**, the contrast calculation unit **605** acquires a maximum value I_{max} (ii, jj, m) of monochrome pixel values in the image area (ii, jj) on the basis of the histogram calculated in step **1404**. In step **1406**, the contrast calculation unit **605** acquires a minimum value I_{min} (ii, jj, m) of monochrome pixel values in the image area (ii, jj) on the basis of the histogram calculated in step **1404**. In step **1407**, the contrast calculation unit **605** calculates a contrast value C (ii, jj, m) of the standard image min the image area (ii, jj) by using the maximum value I_{max} (ii, jj, m) and the minimum value I_{min} (ii, jj, m). The contrast value can be obtained by the formula 4.

$$C(ii,jj,m)=(I\max(ii,jj,m)-I\min(ii,jj,m))/(I\max(ii,jj,m)+I\min(ii,jj,m)) \quad \text{(Formula 4)}$$

In step **1408**, the contrast calculation unit **605** determines whether or not the calculation of the contrast value is completed for all the standard images, that is, whether or not m reaches N−1. If the calculation of the contrast value is completed for all the standard images, the contrast calculation unit **605** proceeds to step **1410**. On the other hand, if there is an unprocessed standard image (in the case of m<N−1), the contrast calculation unit **605** proceeds to step **1409**.

In step **1409**, the contrast calculation unit **605** increments the value of m (m=m+1), updates the standard image, and returns to step **1404**. In this way, the process from step **1404** to step **1408** is repeated until m reaches N−1.

In step **1410**, the contrast calculation unit **605** determines whether or not the number of horizontal divisions in a vertical image area ii reaches Nj in the image areas shown in FIG. **8**, that is, whether or not jj reaches Nj. If the number of horizontal divisions reaches Nj, the contrast calculation unit **605** proceeds to step **1412**. On the other hand, if the number of horizontal divisions does not reach Nj (jj<Nj−1), the contrast calculation unit **605** proceeds to step **1411**.

In step **1411**, the contrast calculation unit **605** increments the value of jj, which indicates a number of the image area in the horizontal direction, (jj=jj+1), updates the image area (ii, jj) where the contrast value is calculated, and returns to step **1403**. In this way, the process from step **1404** to step **1410** is repeated until jj reaches Nj−1.

In step **1412**, the contrast calculation unit **605** determines whether or not the number of vertical divisions in a horizontal image area jj reaches Ni in the image areas shown in FIG. **8**, that is, whether or not ii reaches Ni. If the number of vertical divisions reaches Ni, the contrast calculation unit **605** proceeds to step **1414**. On the other hand, if the number of vertical divisions does not reach Ni (ii<Ni−1), the contrast calculation unit **605** proceeds to step **1413**. In step **1413**, the contrast calculation unit **605** increments the value of ii, which indicates a number of the image area in the vertical direction, (ii=ii+1), updates the image area (ii, jj) where the contrast value is calculated, and returns to step **1403**. In this way, the process from step **1404** to step **1412** is repeated until ii reaches Ni−1. In step **1414**, the contrast calculation unit **605** outputs the contrast value C (ii, jj, m). In this way, the contrast calculation process in step **705** in the flowchart of FIG. **7** is performed.

Although the formula 4 is used in the calculation method of the contrast value in the present embodiment, another contrast calculation method may be used. For example, an edge in an image area where the contrast value is desired to be calculated is extracted by filter processing or the like and an evaluation value such as the strength and the total amount of the edge component may be used as the contrast value. Another calculation method for calculating an evaluation value, by which the contrast or the sharpness of the image can be evaluated, may be used.

<In-Focus Image Selection Process>

FIG. **15** is a flowchart showing a flow of the in-focus image selection process in step **706** in FIG. **7**.

First, in step **1501**, the image selection unit **606** inputs the contrast value C (ii, jj, m) calculated by the contrast calculation unit **605**.

In step **1502**, the image selection unit **606** selects one image area (ii, jj), where the in-focus image is desired to be selected, from the image areas divided by the area division unit **603**. In step **1503**, the image selection unit **606** sets a value Nc, which indicates the number of in-focus images, to zero (Nc=0).

In step **1504**, the image selection unit **606** sets an initial value of a threshold value Th for determining whether or not the selected image is in focus. A user may set the threshold value Th in advance. In the present embodiment, the initial value of the threshold value Th is set to 0.6.

In step **1505**, the image selection unit **606** selects one standard image m where whether or not the image is in focus is determined.

In step **1506**, the image selection unit **606** determines whether or not the contrast value C (ii, jj, m) in the image area (ii, jj) of the standard image m is greater than the threshold value Th. If the contrast value is greater than the threshold value (C (ii, jj, m)>Th), that is, if the standard image m is determined to be in focus in the image area (ii, jj), the image selection unit **606** proceeds to step **1507**. On the other hand, if the contrast value is smaller than or equal to the threshold value, the image selection unit **606** proceeds to step **1509**.

In step **1507**, the image selection unit **606** increments the value Nc, which indicates the number of in-focus images, (Nc=Nc+1).

In step **1508**, the image selection unit **606** holds a number of the standard image m which is determined to be in focus in step **1506**.

In step **1509**, the image selection unit **606** determines whether or not the comparison between the contrast value and the threshold value is completed for all the standard images, that is, whether or not m reaches N−1. If the comparison between the contrast value and the threshold value is completed for all the standard images, the image selection unit **606** proceeds to step **1505**. On the other hand, if there is an unprocessed standard image (in the case of m<N−1), the image selection unit **606** proceeds to step **1510**. In step **1510**, the image selection unit **606** increments the value of m (m=m+1), updates the standard image, and returns to step **1506**.

By processing in this way, the process from step **1506** to step **1509** is repeated until m reaches N−1.

In step **1511**, the image selection unit **606** determines whether or not the value Nc, which indicates the number of in-focus images, is two or more. If the number of in-focus images is two or more (Nc>1), the image selection unit **606** proceeds to step **1513**. On the other hand, if it is determined that the number of in-focus images is not two or more, the image selection unit **606** proceeds to step **1512**.

In step **1512**, the image selection unit **606** changes the threshold value Th. In the change of the threshold value Th in step **1512**, the threshold value Th is decreased. After the threshold value Th is decreased here, the process from step **1505** to step **1511** is repeated. In this way, the image selection unit **606** can obtain a plurality of in-focus images in order from an image having the highest contrast value in the image area (ii, jj).

The process from step **1513** to step **1516** is the same as the process from step **1410** to step **1413** in the flowchart showing a flow of the process in the contrast calculation unit **605** described in FIG. **14**, so that the description thereof will be omitted.

Finally, in step **1517**, the image selection unit **606** outputs the number of the image determined to be in focus in each image area, that is, the correspondence between the image area and the image capturing unit which captures the in-focus image. In this way, the in-focus image selection process in step **706** in the flowchart of FIG. **7** is performed.

FIGS. **16**A and **16**B show captured images of a scene including the objects **1** to **3** and contrast values at three positions of image areas A, B, and C. FIG. **16**A shows an example of images captured by the image capturing units **101** to **103** of the nine image capturing units.

Areas enclosed by a dotted line in the captured images correspond to the image areas A, B, and C. FIG. **16**B shows contrast values in the image areas A, B, and C in the images captured by the image capturing units **101** to **109**.

For example, as shown in FIG. **16**B, the contrast value in the image area A in the image captured by the image capturing unit **101** is 0.783. Similarly, the contrast values in the image area A in the images captured by the image capturing units **102** and **103** are 0.333 and 0.552 respectively.

The contrast values of the image capturing units **104** to **109** not shown in FIG. **16**A are as shown in FIG. **16**B. As described above, the determination whether or not a captured image in the divided image area is in focus is based on the magnitude comparison between the contrast value and the threshold value Th. The threshold value Th is a parameter that determines the selection of the in-focus image. If the threshold value Th is set to a relatively small value, the number of images selected as an in-focus image increases. However, in the present invention that uses distance estimation by a correlation between images, an image that is not sufficiently in focus may be included, so that the accuracy of distance estimation tends to degrade. On the other hand, if the threshold value Th is set to a relatively large value, when selecting in-focus images, it is possible to select images that are sufficiently in focus. However, the number of selected images decreases and an occlusion problem occurs when calculating a distance (the occlusion will be described later). In the present embodiment, considering trade-off between these, the threshold value Th is set to 0.6.

The in-focus image selection unit **404** determines that the images captured by the image capturing units **101** and **105**, which have a value greater than the threshold value Th, are in-focus images in the image area A. The contrast values in the image area A of the images captured by the image capturing units other than the above are smaller than the threshold value (Th=0.6), so that the in-focus image selection unit **404** determines that the images captured by the image capturing units **102** to **104** and **106** to **109** are not in focus in the image area A.

The in-focus image selection unit **404** performs the same process on the image area B and the image area C and selects images captured by the image capturing units that provide an in-focus image in each image area. In the image area B, the in-focus image selection unit **404** selects images captured by two image capturing units **102** and **106** as in-focus images.

Further, in the image area C, the in-focus image selection unit **404** selects images captured by three image capturing units **103**, **108**, and **109** as in-focus images. This result shows that the image capturing units shown in FIG. **23** which include the objects **1** to **3** in a range of the depth of field thereof correspond to the image capturing units, the image captured by which is determined to be an in-focus image by the in-focus image selection unit **404**. In summary, it is possible to select an in-focus image suited to calculate a distance by using the contrast value.

For simplicity of the description, in FIG. **16**A, three image areas are described. However, also in the divided areas other than the divided areas A, B, and C, which are not described in FIG. **16**A, the in-focus image selection unit **404** performs selection of in-focus image.

<Configuration Diagram of Distance Calculation Unit>

FIG. **17** is a block diagram showing an internal configuration of the distance calculation unit **405**.

A number of the in-focus image in each divided area selected by the in-focus image selection unit **404** is input into an in-focus image number input terminal **1701**. An image area selection unit **1702** sets an image area where a distance computing described later is desired to be performed. Digital data of a monochrome image to be stored in the memory unit **407** is input into an image input terminal **1703**. A corresponding point search unit **1704** searches for a corresponding point between images in a plurality of monochrome images supplied from the image input terminal **1703**. More specifically, the corresponding point search unit **1704** searches for a corresponding point between images for a plurality of in-focus images that are determined to be in focus by the in-focus image selection unit **404** in an image area selected by the image area selection unit **1702**. Parameters acquired by the parameter acquisition unit **403** are input into a parameter input terminal **1705**. A distance computing unit **1706** computes a distance to an object by using a result of the corresponding point search unit **1704**. A distance synthesis unit **1707** synthesizes distance data in each image area computed by the distance computing unit **1706** and generates spatial distance data (hereinafter referred to as "range image"). Reference numeral **1708** denotes an output terminal of distance data. The range image synthesized by the distance synthesis unit **1707** is output from the output terminal **1708**.

Next, the details of the distance calculation process performed by the above units in the distance calculation unit **405** will be described.

FIG. **18** is a flowchart showing a flow of the process in the distance calculation unit **405**.

First, in step **1801**, the in-focus image number input terminal **1701** inputs numbers of the in-focus images in each divided area selected by the in-focus image selection unit **404**.

In step **1802**, the image area selection unit **1702** selects one image area (ii, jj) from the image areas divided by the area division unit **603**. Here, (ii, jj) are variables representing a coordinate position of a divided area.

In step **1803**, a corresponding point between images in a plurality of monochrome images supplied from the image input terminal **1703** is searched for. The details of the corresponding point search process will be described later.

In step **1804**, the distance computing unit **1706** computes distances to an object and a background by using the parameters supplied from the parameter input terminal **1705** and a result of the corresponding point search unit **1704**. The details of the distance computing process will be described later.

The process from step **1805** to step **1808** is the same as the process from step **1410** to step **1413** in the flowchart showing a flow of the contrast calculation process described in FIG. **14**, so that the description thereof will be omitted.

In step **1809**, the distance synthesis unit **1707** synthesizes distance data computed by the distance computing unit **1706**.

In step **1809**, distance data calculated in each image area are synthesized as one distance data in order to generate the distance data as a spatial range image.

When the distance data output terminal **1708** outputs the range image synthesized by the distance synthesis unit **1707** in step **1810**, the process is completed.

<Corresponding Point Search Process>

FIG. **19** is a flowchart showing a flow of the corresponding point search process in step **1803** in the flowchart of FIG. **18**.

When the corresponding point search process starts, first, in step **1901**, the corresponding point search unit **1704** inputs the in-focus image in the image area (ii, jj).

In step **1902**, the corresponding point search unit **1704** selects one standard image I' (i, j, mm), which is used as a standard when the corresponding point search process is performed, from a plurality of monochrome image groups stored in the memory unit **407**. Here, (i, j) is a variable representing a coordinate position on an image and mm is a variable

representing a number of the standard image, which starts from an initial value 0. The standard image selected in step **1902** is a first selected standard image and, here, an image of I (i, j, 0) is selected.

In step **1903**, the corresponding point search unit **1704** selects one reference image I (i, j, nn) to be compared with the standard image. Here, nn is a variable representing a number of the reference image. The reference image selected in step **1903** is a first selected reference image and the initial value of nn is set to nn=m+1, so that an image of I (i, j, 1) is selected here. In step **1907** and step **1909** described later, the reference image and the standard image will be updated respectively. When there are M (ii, jj) in-focus images selected by the in-focus image selection unit **404**, the maximum value of m is M (ii, jj)−2 and the maximum value of n is M (ii, jj)−1.

In step **1904**, the corresponding point search unit **1704** performs a feature point correspondence search process between the standard image and the reference image in the image area (ii, jj). The details of the feature point correspondence search process will be described later.

In step **1905**, the corresponding point search unit **1704** holds a relationship between the corresponding points of the standard image and the reference image obtained from a result of the feature point correspondence search.

In step **1906**, the corresponding point search unit **1704** determines whether or not the corresponding point search is completed for all the reference images, that is, whether or not nn reaches M (ii, jj)−1. If the corresponding point search is completed for all the reference images, the corresponding point search unit **1704** proceeds to step **1908**. On the other hand, if there is an unprocessed reference image (in the case of nn<M (ii, jj)−1), the corresponding point search unit **1704** proceeds to step **1907**.

In step **1907**, the corresponding point search unit **1704** increments the value of nn (nn=nn+1), updates the reference image, and returns to step **1904**. In this way, the process from step **1904** to step **1906** is repeated until nn reaches M (ii, jj)−1. In step **1908**, the corresponding point search unit **1704** determines whether or not the corresponding point search is completed for all the standard images, that is, whether or not mm reaches M (ii, jj)−2. If the corresponding point search is completed for all the standard images, the corresponding point search unit **1704** proceeds to step **1910**. On the other hand, if there is an unprocessed reference image (in the case of mm<M (ii, jj)−2), the corresponding point search unit **1704** proceeds to step **1909**.

In step **1909**, the corresponding point search unit **1704** increments the value of mm (mm=mm+1), updates the standard image, and returns to step **1903**. In this way, the process from step **1903** to step **1908** is repeated until mm reaches M (ii, jj)−2. In step **1910**, the corresponding point search unit **1704** outputs the relationship between the corresponding points of the standard image and the reference image held in step **1905**. In this way, the corresponding point search process in step **1803** in the flowchart of FIG. **18** is performed.

<Feature Point Correspondence Search Process>

FIG. **20** is a flowchart showing a flow of the feature point correspondence search process in step **1904** in the flowchart of FIG. **19**.

First, in step **2001**, the corresponding point search unit **1704** inputs the standard image and the reference image.

In step **2002**, the corresponding point search unit **1704** extracts feature points of the input standard image. As a method for extracting feature points, a conventional edge detection filter process is used. In the present embodiment, a Sobel filer is used as an edge detection filter. However, another edge detection filter may be used to detect feature points. For example, Robinson's edge detection filter may be used. Further, feature points may be extracted by a method using a combination of these edge detection filters.

In step **2003**, the corresponding point search unit **1704** sets a position (i, j) of a pixel of interest to search for a corresponding point in the standard image.

In step **2004**, the corresponding point search unit **1704** sets a predetermined block (a block from which a difference value is obtained) around the set pixel of interest and the center position (ci, cj) of the block in the reference block.

In step **2005**, the corresponding point search unit **1704** determines whether or not a block of the center position (ci, cj) set in the standard image is a block effective for the feature point correspondence search. When determining an effective block, the corresponding point search unit **1704** counts the number of the feature points in the block, which are extracted in step **2002**, and if the number is greater than a pre-defined number, the block is determined to be an effective block. In other words, in step **2005**, a block including many feature points in the block is determined to be an effective block by the corresponding point search unit **1704**. If the block is determined to be an effective block, the corresponding point search unit **1704** proceeds to step **2006**.

On the other hand, in step **2005**, if the corresponding point search unit **1704** determines that the block of interest is not an effective block, the corresponding point search unit **1704** proceeds to step **2007**.

In step **2006**, the corresponding point search unit **1704** sets a range in which the corresponding point search unit **1704** performs the feature point correspondence search. The range in which the feature point correspondence search is performed may be set to any size considering the computing cost. However, the position (i, j) of the pixel of interest needs to be included in the range. Generally, when the parallax is large, the range in which the feature point correspondence search is performed is preferred to be large. On the other hand, when the parallax is small, the range in which the feature point correspondence search is performed may be small. More specifically, when the standard image and the reference image are images captured by image capturing units adjacent to each other in the image capturing apparatus shown in FIG. **1**, the range in which the feature point correspondence search is performed is preferred to be small. On the other hand, when the standard image and the reference image are images captured by image capturing units located spatially far away from each other, the range in which the feature point correspondence search is performed is preferred to be large.

FIGS. **21**A and **21**B are diagrams showing a position (i, j) of the pixel of interest, a block set in the reference image, the center position of the block, and a set range in which the feature point correspondence search is performed. In this case, the block has a size determined by 2wi+1 pixels in the vertical direction and 2wj+1 pixels in the horizontal direction. Here, wi and wj are integers greater than or equal to zero.

Let us return to the description of the flowchart in FIG. **20**. In step **2007**, the corresponding point search unit **1704** determines that, in the reference image, there is no point corresponding to the position (i, j) of the pixel of interest in the standard image. The distance data at a pixel position where the corresponding point is determined to be absent is obtained by an interpolation process from distance data obtained from a nearby pixel where the corresponding point is successfully searched for. The interpolation process of distance data will be described later.

In step **2008**, the corresponding point search unit **1704** calculates an average value of difference values using the standard image and the reference image in a range of a set

block. The formula 5 is a computing formula for obtaining an average value E_{ave}(ci, cj, nn) of difference values at the center position (ci, cj) of the block.

$$E_{ave}(ci, cj, nn) = \frac{1}{(2w_i + 1)(2w_j + 1)} \sum_{a=-wi}^{wi} \sum_{b=-wj}^{wj} |I'(i + ci + a, j + cj + b, nn) - I'(i, j, mm)| \quad \text{(Formula 5)}$$

Here, I' (i, j, mm) represents an image of an overlap area in the standard image and I' (i, j, nn) represents an image of an overlap area in the reference image. Here, mm and nn are variables indicating numbers of the standard image and the reference image, respectively.

In step **2009**, the corresponding point search unit **1704** determines whether or not the process for obtaining the average value of the difference values is completed for all the blocks in the set range in which the feature point correspondence search is performed. If the process for obtaining the average value of the difference values is completed for all the blocks, the corresponding point search unit **1704** proceeds to step **2011**. On the other hand, if there is an unprocessed block, the corresponding point search unit **1704** proceeds to step **2010**.

In step **2010**, the corresponding point search unit **1704** updates the center position (ci, cj) of the block and changes the block position to a block position where the average value of the difference values is not obtained. After changing the block position, the corresponding point search unit **1704** returns to step **2008**.

In step **2011**, the corresponding point search unit **1704** obtains a center position (ci_min, cj_min) of a block where the average value of the difference values is smallest and selects the block position where the average value of the difference values is smallest in the set range in which the feature point correspondence search is performed as a corresponding point. In other words, the pixel position in the reference image nn corresponding to the image position (i, j) of the standard image mm is selected as (ci_min, cj_min). The result of the selected corresponding point is held in the following array.

$$Ei(i,j,mm)=\{nn,ci_\min\}$$

$$Ej(i,j,mm)=\{nn,cj_\min\}$$

Here, Ei (i, j, mm) represents a vertical position ci_min of the corresponding pixel in the reference image nn at the pixel position (i, j) of the standard image mm. Similarly, Ej (i, j, mm) represents a horizontal position cj_min of the corresponding pixel in the reference image nn at the pixel position (i, j) of the standard image mm.

In step **2012**, the corresponding point search unit **1704** determines whether or not the process for obtaining the average value of the difference values is completed for all the pixels in the reference image. If the process for obtaining the average value of the difference values is completed for all the pixels, the corresponding point search unit **1704** proceeds to step **2013**. On the other hand, if there is an unprocessed pixel, the corresponding point search unit **1704** proceeds to step **2014**.

In step **2014**, the corresponding point search unit **1704** updates the position (i, j) of the pixel of interest and changes the position of the pixel of interest to a position of a pixel where the average value of the difference values is not obtained. After changing the position of the pixel of interest, the corresponding point search unit **1704** returns to step **2004**. In step **2013**, when the corresponding point search unit **1704** outputs the corresponding points between the standard image and the reference image, which are obtained in the manner as described above, the process is completed.

Although, in the feature point correspondence search process in the present embodiment, as shown by the formula 5, the corresponding point between images is searched for on the basis of the average value of the difference values between the standard image and the reference image, other values may be used. For example, any value, such as a correlation coefficient, from which the similarity between images near the pixel of interest can be known, may be used when searching for a corresponding point.

<Distance Calculation Process>

FIG. **22** is a flowchart showing a flow of the distance calculation process in step **1804** in the flowchart of FIG. **18**.

First, in step **2201**, the distance computing unit **1706** inputs the result of the corresponding points obtained by the corresponding point search unit **1704**.

In step **2202**, the distance computing unit **1706** acquires parameters supplied from the parameter input terminal **1705**.

In step **2203**, the distance computing unit **1706** selects one standard image mm to be a standard when calculating a distance. The standard image selected in step **2203** is a first selected standard image and, here, an image of mm=0 is selected.

In step **2204**, the distance computing unit **1706** selects one reference image nn to be compared with the standard image. The reference image selected in step **2204** is a first selected reference image and the initial value of nn is set to nn=mm+1, so that an image of nn=1 is selected here. The handling of mm and nn which are values representing numbers of the standard image and the reference image is the same as that in the corresponding point search process described in FIG. **19**, so that the description thereof will be omitted.

In step **2205**, the distance computing unit **1706** sets a position (i, j) of a pixel of interest to estimate a distance in the standard image.

In step **2206**, the distance computing unit **1706** determines whether or not there is a corresponding point between the standard image and the reference image at the position (i, j) of the pixel of interest. If it is determined that there is a corresponding point, the distance computing unit **1706** proceeds to step **2207**.

In step **2207**, the distance computing unit **1706** calculates a distance Δx(i, j, mm, nn) on an image between the position (i, j) of the pixel of interest on the standard image and a corresponding pixel position on the reference image.

$$\Delta x(i,j,mm,nn)=\sqrt{(i-ci_\min)^2+(j-cj_\min)^2} \quad \text{(Formula 6)}$$

Here, (ci_min, cj_min) is a pixel position on the reference image nn corresponding to the pixel position (i, j) on the standard image mm. In step **2208**, the distance computing unit **1706** calculates a distance d (i, j, mm, nn) at the position (i, j) of the pixel of interest by the triangulation method using the distance Δx(i, j, mm, nn) on the image. The distance is calculated according to the formula 7.

$$d(i, j, mm, nn) = ds(mm)\frac{\Delta x(i, j, mm, nn)}{l(mm, nn)} \quad \text{(Formula 7)}$$

Here, ds (mm) is a focus length of an image capturing unit that captures the standard image mm. l(mm, nn) is a distance

between an image capturing unit that captures the standard image mm and an image capturing unit that captures the reference image nn in the camera. In the present embodiment, images are captured by a plurality of image capturing units in which focus is set at positions different from each other, so that the focus length of each image capturing unit is different from each other. Therefore, when a distance corresponding to the standard image mm is calculated, ds (mm), which is a focus length of the image capturing unit that captures the standard image, is used. On the other hand, in step **2206**, if the distance computing unit **1706** determines that there is no pixel in the reference image which corresponds to the pixel of interest in the standard image, the distance computing unit **1706** proceeds to step **2009**.

In step **2009**, the distance computing unit **1706** calculates the distance d(i, j, mm, nn) at the position of the pixel of interest by an interpolation process using distance data calculated near the pixel of interest. As the interpolation process, a conventional interpolation process such as linear interpolation and spline interpolation is used. The process from step **2210** to step **2213** is the same as the process from step **1906** to step **1909** in the flowchart of the corresponding point search process in FIG. **19**, so that the description thereof will be omitted. In step **2214**, the distance computing unit **1706** obtains an average value d_{ave} (i, j) of distance data at the pixel of interest (i, j) on the standard image. The calculation method of the average value of distance data is shown by the formula 8.

$$d_{ave}(i, j) = \frac{2}{M(M-1)} \sum_{mm=0i}^{M-1} \sum_{nn=mm+1}^{M} d(i, j, mm, nn) \quad \text{(Formula 8)}$$

The reason why the average value of distance data is obtained is to improve the accuracy of the distance data. When a distance is calculated based on parallaxes between a plurality of images, there is a phenomenon in which a background portion captured by a certain image capturing unit is not captured by another image capturing unit when a foreground object blocks a view of the background portion. This phenomenon is called occlusion. In an image area in which the occlusion occurs, a corresponding point between images cannot be obtained, so that there is a problem that accurate distance calculation cannot be performed. To solve the problem, it is necessary to reduce image areas in which the occlusion occurs by, for example, using a camera array image capturing device such as the camera array image capturing device employed in the present embodiment and increasing the number of image capturing units. Further, a method which uses distance data measured from various viewpoints and generates final distance data is effective. To obtain the effect, as shown in formula 8, distance data obtained from a plurality of image capturing units are averaged. As the distance data at the position of the pixel of interest, a median value of a plurality of input distance data may be used instead of the average value. Finally, in step **2215**, the distance computing unit **1706** outputs the distance data d_{ave} (i, j) and completes the process.

In the present embodiment, as shown in FIG. **2**, a providing method of the range image by color images obtained by a camera array image capturing device including a plurality of color image capturing units is described. In the camera array image capturing device, part or all of the image capturing units **101** to **109** may be replaced by image capturing units that capture a monochrome image. In this case, the color filter **308** in FIG. **3**A, the monochrome image conversion unit **402** in FIG. **4**, and the conversion process to a monochrome image in FIG. **5** (step **502**) are omitted.

As described above, according to the present embodiment, it is possible to provide an accurate range image from an image group acquired by a camera array image capturing device.

(Second Embodiment)

In the first embodiment, in the corresponding point search process used to calculate a distance, a corresponding point in the reference image is searched for only for a pixel position at which a feature point is present in the standard image used to calculate a distance. Next, an aspect that a corresponding point in the reference image is searched for without obtaining a feature point from the standard image will be described as a second embodiment. The description of the same components as those in the first embodiment will be simplified or omitted, and, here, the differences from the first embodiment will be mainly described.

FIG. **24** is a flowchart showing a flow of the process in the corresponding point search unit **1704** according to the present embodiment. The process from step **2401** to step **2403** is the same as the process from step **1901** to step **1903** in the flowchart of FIG. **19** according to the first embodiment. In step **2404**, the corresponding point search unit **1704** performs a block matching process between the standard image and the reference image in the image area (ii, jj). The details of the block matching process will be described later. The process from step **2406** to step **2410** is the same as the process from step **1906** to step **1910** in the flowchart of FIG. **19** according to the first embodiment.

<Block Matching Process>

FIG. **25** is a flowchart showing a flow of the block matching process in step **2404** in the flowchart of FIG. **24**.

First, in step **2501**, the corresponding point search unit **1704** inputs the standard image and the reference image. In step **2502**, the corresponding point search unit **1704** divides the input standard image into a plurality of blocks. In step **2503**, the corresponding point search unit **1704** selects a block of interest from the plurality of divided blocks.

FIG. **26** shows the standard image divided into blocks and a position (bi, bj) of the block of interest. The standard image is divided into Mi blocks in the vertical direction and Mj blocks in the horizontal direction. Therefore, the variables bi and bj, which represent the position of the block of interest, may have the following values: bi=[0, 1, . . . , Mi−1] and bj=[0, 1, . . . , Mj−1]. The corresponding point search unit **1704** selects the most upper-left block of the standard image divided into blocks as the first selected block of interest, so that (bi, bj)=(0, 0).

Let us return to the description of the flowchart in FIG. **25**. In step **2504**, the corresponding point search unit **1704** sets a range in which the block matching of the block of interest is performed. In the same manner as in the case in which the search range of the feature point is determined as shown in FIGS. **21**A and **21**B, the range in which the block matching is performed may be set to any size considering the computing cost. However, the position (bi, bj) of the block of interest needs to be included in the range. In step **2506**, the corresponding point search unit **1704** sets a position (ci, cj) of a pixel of interest on which the block matching process computing is performed in the range in which the block matching is performed. In step **2505**, the corresponding point search unit **1704** calculates an average value of difference values using the standard image and the reference image in a range of a set block. The formula 9 is a computing formula for obtain-

ing an average value E_{ave}(bi, bj, nn) of difference values at the center position (bi, bj) of the block.

$$E_{ave}(bi, bj, nn) = \frac{1}{(2w_i+1)(2w_j+1)} \sum_{a=-wi}^{wi} \sum_{b=-wj}^{wj} |I'(i+bi+a,\ j+bj+b,\ nn) - I'(i,\ j,\ mm)| \quad \text{(Formula 9)}$$

Here, I' (i, j, mm) represents an image of an overlap area in the standard image and I' (i, j, nn) represents an image of an overlap area in the reference image. Here, mm and nn are variables indicating numbers of the standard image and the reference image, respectively. In step **2507**, the corresponding point search unit **1704** determines whether or not the process for obtaining the average value of the difference values is completed for all the pixel positions in the set matching range. If the process for obtaining the average value of the difference values is completed for all the pixel positions, the corresponding point search unit **1704** proceeds to step **2509**. On the other hand, if there is an unprocessed pixel position, the corresponding point search unit **1704** proceeds to step **2508**.

In step **2507**, the corresponding point search unit **1704** changes the position (a, b) of the pixel of interest to a pixel position at which the average value of the difference values is not calculated in the block matching range set in the reference image. After changing the position of the pixel of interest, the corresponding point search unit **1704** returns to step **2506** and repeats the process of steps **2506** and **2507** until the process is completed for all the pixels in the block matching range.

In step **2509**, the corresponding point search unit **1704** obtains a pixel position (ci_min, cj_min) at which the average value of the difference values is smallest and selects a block position at which the average value of the difference values is smallest in the set block matching range as a corresponding point. In short, the pixel position in the reference image nn corresponding to the block position (bi, bj) of the standard image mm is (ci_min, cj_min). The result of the selected corresponding point is held in the following array.

$$Ei(bi,bj,mm)=\{nn,ci_\min\}$$

$$Ej(bi,bj,mm)=\{nn,cj_\min\}$$

Here, Ei (bi, bj, mm) represents a vertical position ci_min of the corresponding pixel in the reference image nn at the block position (bi, bj) of the standard image mm. Similarly, Ej (bi, bj, mm) represents a horizontal position cj_min of the corresponding pixel in the reference image nn at the pixel position (i, j) of the standard image mm.

In step **2510**, the corresponding point search unit **1704** determines whether or not the process for obtaining the average value of the difference values is completed for all the blocks shown in FIG. **26**. If the process for obtaining the average value of the difference values is completed for all the blocks, the corresponding point search unit **1704** proceeds to step **2512**. On the other hand, if there is an unprocessed block, the corresponding point search unit **1704** proceeds to step **2511**.

In step **2511**, the corresponding point search unit **1704** updates the position (bi, bj) of the pixel of interest and changes the position of the block of interest to a position of a block where the average value of the difference values is not obtained. After changing the position of the block of interest, the corresponding point search unit **1704** returns to step **2504** and repeats the process of steps **2504** to **2509** until the block matching process is completed for all the blocks. In step **2512**, when the corresponding point search unit **1704** outputs the corresponding points between the standard image and the reference image, which are obtained in the manner as described above, the process is completed. In the block matching process of the present embodiment, search of the search point on the reference image corresponding to the center coordinate position of the block selected by the block matching is completed. Corresponding points corresponding to pixels other than the center coordinate position of the block are output as pixels having no corresponding point. For the pixels having no corresponding point, in the same manner as in the first embodiment, the distance computing unit **1706** obtains a corresponding pixel by using a result of a nearby pixel where the search of the corresponding point is completed.

As described above, according to the present embodiment, the search process of the corresponding point is performed without obtaining the feature point, so that it is possible to simplify the process performed in the image processing unit **212**.

(Third Embodiment)

In the first and the second embodiments, the range image is generated on the basis of captured images acquired by a plurality of image capturing units in which the focus position is determined in advance. Next, an aspect that the range image is generated by controlling the focus position of each image capturing unit according to a distance to an object whose image is to be captured will be described as a third embodiment. The description of the same components as those in the first or the second embodiment will be simplified or omitted, and, here, the differences from the first and the second embodiments will be mainly described.

<Configuration Diagram of Image Capturing Unit Controller>

FIG. **27** is a block diagram showing an internal configuration of the image capturing unit controller **208** for controlling the focus position of each image capturing unit according to a distance to an object whose image is to be captured.

A distance calculation range acquisition unit **2701** acquires a distance calculation range supplied through the bus **204**. The distance calculation range is provided from the operation unit **205** by an instruction of a user. A parameter acquisition unit **2702** acquires various parameters of the image capturing units **101** to **109** when an image is captured. A focus position setting unit **2703** sets the focus position of each image capturing unit on the basis of the distance calculation range acquired by the distance calculation range acquisition unit. A depth of field computing unit **2704** computes the depth of field of each image capturing unit by using the various parameters supplied from the parameter acquisition unit **2702** and the focus positions set by the focus position setting unit **2703**. A focus position controller **2705** controls the focus position of each image capturing unit on the basis of the result determined by the focus position setting unit **2703**.

The internal configuration and the process flow of the image processing unit **212** of the present embodiment are the same as those in the first and the second embodiments, so that the description thereof will be omitted.

FIG. **28** is a flowchart showing a process flow in the image capturing unit controller **208**. In step **2801**, the parameter acquisition unit **2702** receives the aforementioned parameters related to the image capturing units **101** to **109**.

In step **2802**, the distance calculation range acquisition unit **2701** acquires the distance calculation range for calculating a

distance. In the present embodiment, a distance to an object of 1 m to 3 m is set as a distance calculation range based on a user's instruction.

In step **2803**, the focus position setting unit **2703** selects an image capturing unit to which the focus position is set. The image capturing unit **101** is selected as a first image capturing unit to which the focus position is set.

In step **2804**, the focus position setting unit **2703** sets a first object distance to the image capturing unit selected in step **2803**. Here, the nearest distance, that is, 1 m, in the distance calculation range acquired in step **2802** is set as a first object distance.

In step **2805**, the depth of field computing unit **2704** calculates a front depth of field and a rear depth of field of the set object distance. The formula 10 shows a calculation formula of the front depth of field df. The formula 11 shows a calculation formula of the rear depth of field db.

$$df = \left(1 - \frac{\varepsilon F(d_{obj} - f)}{f^2 + \varepsilon F(d_{obj} - f)}\right) d_{obj} \quad \text{(Formula 10)}$$

$$db = \left(1 + \frac{\varepsilon F(d_{obj} - f)}{f^2 - \varepsilon F(d_{obj} - f)}\right) d_{obj} \quad \text{(Formula 11)}$$

Here, f is the focal length of the image capturing unit, F is the F-number of the image capturing unit, ϵ is a diameter of the permissible circle of confusion, and d_{obj} is a distance from the image capturing unit to the object. The focal length and the F-number are parameters of the image capturing unit and are values supplied from the parameter acquisition unit **2702**. For convenience of description, in the present embodiment, the focal lengths and the F-numbers of all the image capturing units are set to the same value respectively, so that f is set to 35 mm and F is set to 5.6.

The focal length and the F-number may be parameters different for each image capturing unit. All the image capturing units may have parameters different from those of other image capturing units. Or, part of the image capturing units may have the same parameters and the other image capturing units may have different parameters.

The diameter ϵ of the permissible circle of confusion is one of parameters that affect the range of the depth of field. When the diameter ϵ of the permissible circle of confusion is set to a relatively large value, the range of the depth of field increases. However, in the present invention that uses distance estimation by a correlation between images, the accuracy of distance estimation tends to degrade at the ends of the depth of field.

On the other hand, when the diameter ϵ of the permissible circle of confusion is set to a relatively small value, it is possible to prevent the accuracy of distance estimation at the ends of the depth of field from degrading. However, the range of the depth of field decreases, so that it is difficult to calculate a distance in a wide range. In the present embodiment, considering trade-off between these, the diameter ϵ of the permissible circle of confusion is set to 40 um. The size of the diameter of the permissible circle of confusion may be a fixed value or can be set from outside by a user.

The object distance d_{obj}=1 m determined in step **2804** is substituted. When these parameters are substituted in the formula 10 and the formula 11, the front depth of field df and the rear depth of field db are calculated as df=0.85 m and db=1.21 m, respectively.

In step **2806**, the focus position setting unit **2703** sets an object distance where the depth of field is calculated next time. Here, the rear depth of field db calculated in step **2805** is set as the next object distance. In this case, 1.21 m is set to the next object distance d_{obj}. In step **2807**, the focus position setting unit **2703** determines whether or not the set object distance d_{obj} is located outside the distance calculation range determined in step **2802**. If it is determined that the object distance d_{obj} is located outside the distance calculation range (1 m to 3 m), the focus position setting unit **2703** proceeds to step **2809**.

In step **2807**, if it is determined that the object distance d_{obj} is located inside the distance calculation range, the focus position setting unit **2703** proceeds to step **2808**.

In step **2808**, the focus position setting unit **2703** changes the image capturing unit to which the focus position is set in order to select an image capturing unit to which the focus position is set next time, and returns to step **2805**.

In step **2809**, the focus position setting unit **2703** determines whether or not the focus position setting is completed for all the image capturing units. If the focus position setting is completed for all the image capturing units, the focus position setting unit **2703** proceeds to step **2811**. If there is an unprocessed image capturing unit, the focus position setting unit **2703** proceeds to step **2810**.

In step **2810**, the focus position setting unit **2703** updates the image capturing unit and returns to step **2804**. The focus position setting unit **2703** repeatedly performs the process from step **2804** to step **2809** until the focus position setting is completed for all the image capturing units. In step **2811**, the focus position controller **2705** controls the focus position of each image capturing unit on the basis of the focus positions set for the image capturing units, and then the process is completed.

In step **2803**, the focus position setting unit **2703** selects the image capturing unit **101** as a first image capturing unit to which the focus position is set. However, the focus position setting unit **2703** may select another image capturing unit. The focus position setting unit **2703** may select the image capturing unit **109**. In the changing process of the image capturing unit in step **2808**, the image capturing unit may be changed in an order different from the order of numbers of the image capturing units. If the image capturing unit **109** is determined to be the first image capturing unit to which the focus position is set, the image capturing unit may be changed in descending order of the numbers of the image capturing units or may be changed in random order.

Further, in step **2804**, the focus position setting unit **2703** sets the first object distance as the nearest distance in the distance calculation range. However, the first object distance is not limited to this distance. The focus position setting unit **2703** may set the farthest distance in the distance calculation range as the first object distance. In this case, in step **2806**, the process is changed so that the front depth of field is set as the next object distance.

FIG. **29** shows the focus positions of the image capturing units **101** to **109** derived according to the process flow of FIG. **28** and the front and rear depths of field. The focus positions and the depths of field of the image capturing units **101** to **105** cover the set distance calculation range of 1 m to 3 m. The focus positions of the image capturing units **106** to **109** are set so that the image capturing units **106** to **109** further cover the distance calculation range covered by the image capturing units **101** to **105**.

FIG. **30** shows the ranges of the depth of field of the image capturing units and the number of image capturing units that are in a range of the depth of field and are in focus at each

distance on the basis of the focus positions and the front and rear depths of field of the image capturing units **101** to **109** shown in FIG. **29**.

In FIG. **30**, the focus positions of the image capturing units are set so that a range A including the object **1** includes the depths of field of four image capturing units. Further, the focus positions of the image capturing units are set so that a range B including the object **2** includes the depths of field of three image capturing units.

On the other hand, in FIG. **23** of the first embodiment, the focus positions are set so that the depths of field of two image capturing units are included in the range A and the range B. By determining the distance calculation range, it is possible to capture an image of an object as an image in which much more image capturing units are in focus on the same object (an image in which the object is included in the depths of field). Therefore, it is possible to obtain a much more accurate range image.

As described above, according to the present embodiment, it is possible to provide a much more accurate range image by setting the focus positions of the image capturing units according to the distance calculation range.

(Fourth Embodiment)

In the first to the third embodiments, the image capturing apparatus includes image capturing units, each of which has lenses and a sensor. Next, an aspect in which sensors of the image capturing apparatus are integrated into one component will be described as a fourth embodiment. The description of the same components as those in the first to the third embodiments will be simplified or omitted, and, here, the differences from the first to the third embodiments will be mainly described.

FIGS. **31**A and **31**B are diagrams showing an internal configuration of the image capturing apparatus. In the same manner as in FIGS. **3**A and **3**B, each of the image capturing units **101** to **109** includes lenses, an aperture, a shutter, an optical low pass filter, an iR cut filter, a color filter, a sensor, and an A/D converter. However, the configuration of the sensor is different.

A sensor **3100** is a sensor of the image capturing apparatus. Lenses **3101** to **3103** are lenses of the image capturing units **101** to **103**. The sensor **3100** captures object images acquired by the image capturing units **101** to **109** by a single sensor. A single image captured by the sensor **3100** are associated with each image area captured by each image capturing unit and extracted as images captured by the image capturing units **101** to **109**. Thereafter, the distance to the object is calculated by the image processing unit **212** according to the distance calculation method described above. By employing such a configuration, it is possible to further simplify the configuration of the image capturing apparatus.

As described above, according to the present embodiment, it is possible to provide a range image by a downsized image capturing apparatus.

(Another Embodiment)

The object of the present invention is also achieved by performing the process described below. A storage medium recording program code of software realizing the functions of the embodiments described above is supplied to a system or an apparatus and a computer (CPU, MPU, or the like) of the system or the apparatus reads the program code stored in the storage medium. In this case, the program code read from the storage medium realizes the functions of the embodiments described above, so that the program code and the storage medium storing the program code constitute the present invention.

(Other Embodiments)

Aspects of the present invention can also be realized by a computer of a system or apparatus (or devices such as a CPU or MPU) that reads out and executes a program recorded on a memory device to perform the functions of the above-described embodiment(s), and by a method, the steps of which are performed by a computer of a system or apparatus by, for example, reading out and executing a program recorded on a memory device to perform the functions of the above-described embodiment(s). For this purpose, the program is provided to the computer for example via a network or from a recording medium of various types serving as the memory device (e.g., computer-readable medium).

While the present invention has been described with reference to exemplary embodiments, it is to be understood that the invention is not limited to the disclosed exemplary embodiments. The scope of the following claims is to be accorded the broadest interpretation so as to encompass all such modifications and equivalent structures and functions.

This application claims the benefit of Japanese Patent Application No. 2011-176117, filed Aug. 11, 2011, which is hereby incorporated by reference herein in its entirety.

What is claimed is:

1. An image acquisition apparatus comprising:

a first image capturing unit group including a plurality of image capturing units in which at least part of ranges of first depths of field overlap each other and acquiring a first image data group;

a second image capturing unit group including a plurality of image capturing units in which at least part of ranges of second depths of field overlap each other and acquiring a second image data group, the second depths of field being different from the first depths of field;

an in-focus image selection unit configured to calculate, for each of the first image data group acquired by the first image capturing unit group and the second image data group acquired by the second image capturing unit group, an area where angles of view of the plurality of image capturing units in each of the image capturing unit groups overlap each other and to select in-focus image data in the overlap area; and

a distance calculation unit configured to use the in-focus image data selected from the first image data group by the in-focus image selection unit to obtain a distance to a first object in images of the first image data group, and to use the in-focus image data selected from the second image data group by the in-focus image selection unit to obtain a distance to a second object in images of the second image data group, the second object being different from the first object,

wherein the in-focus image selection unit selects the in-focus image data for each sub-area obtained by dividing the overlap area, and

wherein the distance calculation unit calculates the distance to each object in the sub-area.

2. The image acquisition apparatus according to claim **1**, wherein focal lengths of the plurality of image capturing units of the first image capturing unit group and the second image capturing unit group are the same.

3. The image acquisition apparatus according to claim **1**, wherein the range of the depths of field in the first image capturing unit group and the range of the depths of field in the second image capturing unit group do not overlap each other.

4. The image acquisition apparatus according to claim **1**, further comprising:

a setting unit configured to set a distance range in which a distance to an object is obtained; and

a determination unit configured to determine the range of the first depths of field and the range of the second depths of field on the basis of the distance range which is set by the setting unit.

5. The image acquisition apparatus according to claim **1**, further comprising

a determination unit configured to determine whether or not each of the sub-areas is an area in which a distance to an object is obtained,

wherein the distance calculation unit calculates a distance to the object in a sub-area, the sub-area being the area in which a distance to the object is obtained.

6. The image acquisition apparatus according to claim **5**, wherein the determination unit is configured to determine whether or not the sub-area is an area in which a distance to the object is obtained based on a contrast value in the sub-area.

7. The image acquisition apparatus according to claim **1**, further comprising a synthesis unit configured to synthesize a range image showing a distance to each object by using the first object distance data and the second object distance data calculated by the distance calculation unit.

8. The image acquisition apparatus according to claim **1**, wherein the distance calculation unit is configured to obtain a distance to each object by obtaining a corresponding point in an image in each image data group acquired by each image capturing unit group.

9. An image processing method in an image acquisition apparatus having a first image capturing unit group including a plurality of image capturing units in which at least part of ranges of first depths of field overlap each other and a second image capturing unit group including a plurality of image capturing units in which at least part of ranges of second depths of field overlap each other, the second depths of field being different from the first depths of field, the method comprising the steps of:

calculating, for each of a first image data group acquired by the first image capturing unit group and a second image data group acquired by the second image capturing unit group, an area where angles of view of the plurality of image capturing units in each of the image capturing unit groups overlap each other and selecting in-focus image data in the overlap area; and

using the in-focus image data selected from the first image data group in the selecting step to obtain a distance to a first object in images of the first image data group, and using the in-focus image data selected from the second image data group in the selecting step to obtain a distance to a second object in images of the second image data group, the second object being different from the first object,

wherein, in the selecting step, the in-focus image is selected for each sub-area obtained by dividing the overlap area, and

wherein, in the step of obtaining a distance, the distance to each object in the sub-area is calculated.

10. A non-transitory computer readable storage medium storing a program for causing a computer to perform the control method according to claim **9**.

* * * * *