US007783699B2

(12) **United States Patent**
Rasin et al.

(10) **Patent No.: US 7,783,699 B2**
(45) **Date of Patent: Aug. 24, 2010**

(54) **USER INTERFACE SYSTEM FOR A VEHICLE**

(75) Inventors: **Vladimir Rasin**, Northville, MI (US); **Mark Schunder**, Dearborn, MI (US)

(73) Assignee: **Ford Motor Company**, Dearborn, MI (US)

(*) Notice: Subject to any disclaimer, the term of this patent is extended or adjusted under 35 U.S.C. 154(b) by 910 days.

(21) Appl. No.: **11/424,994**

(22) Filed: **Jun. 19, 2006**

(65) **Prior Publication Data**

US 2007/0294625 A1 Dec. 20, 2007

(51) **Int. Cl.**
G06F 15/16 (2006.01)
G06F 3/048 (2006.01)

(52) **U.S. Cl.** **709/203**; 709/217; 701/36

(58) **Field of Classification Search** 709/202–203, 709/217–219; 700/83; 701/36; 715/513, 715/700, 760, 764
See application file for complete search history.

(56) **References Cited**

U.S. PATENT DOCUMENTS

2004/0034455 A1* 2/2004 Simonds et al. 701/1
2004/0056890 A1* 3/2004 Hao et al. 345/744

* cited by examiner

Primary Examiner—Peling A Shaw
(74) *Attorney, Agent, or Firm*—Jennifer M. Stec; Brooks Kushman P.C.

(57) **ABSTRACT**

A user interface system and method for a vehicle enables access to services available through an electronic device. The user interface system includes a networking gateway configured to receive a first data set from the electronic device. A service engine is included, which is operable with the networking gateway. The service engine is configured to process the first data set and output a second data set that corresponds to the services. A data transformation agent receives the second data set and generates a third data set, wherein the third data set is in a predetermined format. A user interface module is included that is configured to communicate with the data transformation agent. The user interface module receives the third data set having the predetermined format and the user interface module provides an interface for the user to access the services available through the electronic device.

20 Claims, 3 Drawing Sheets

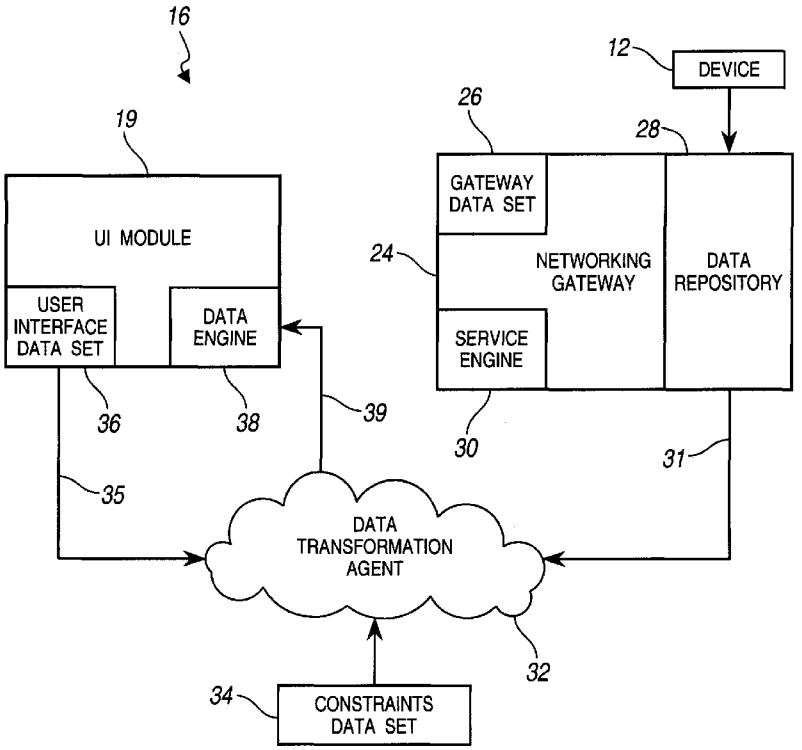

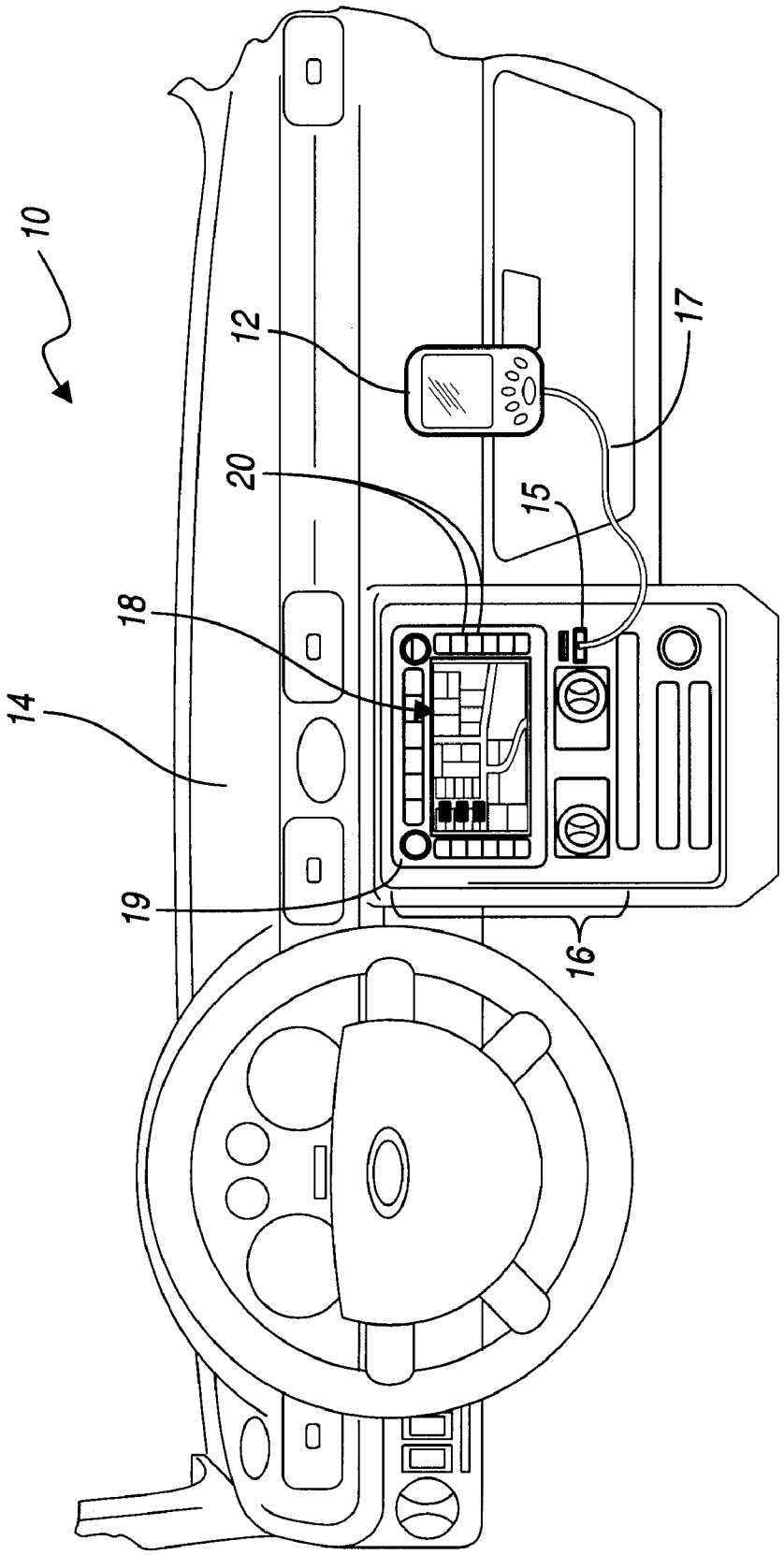

FIG. 1

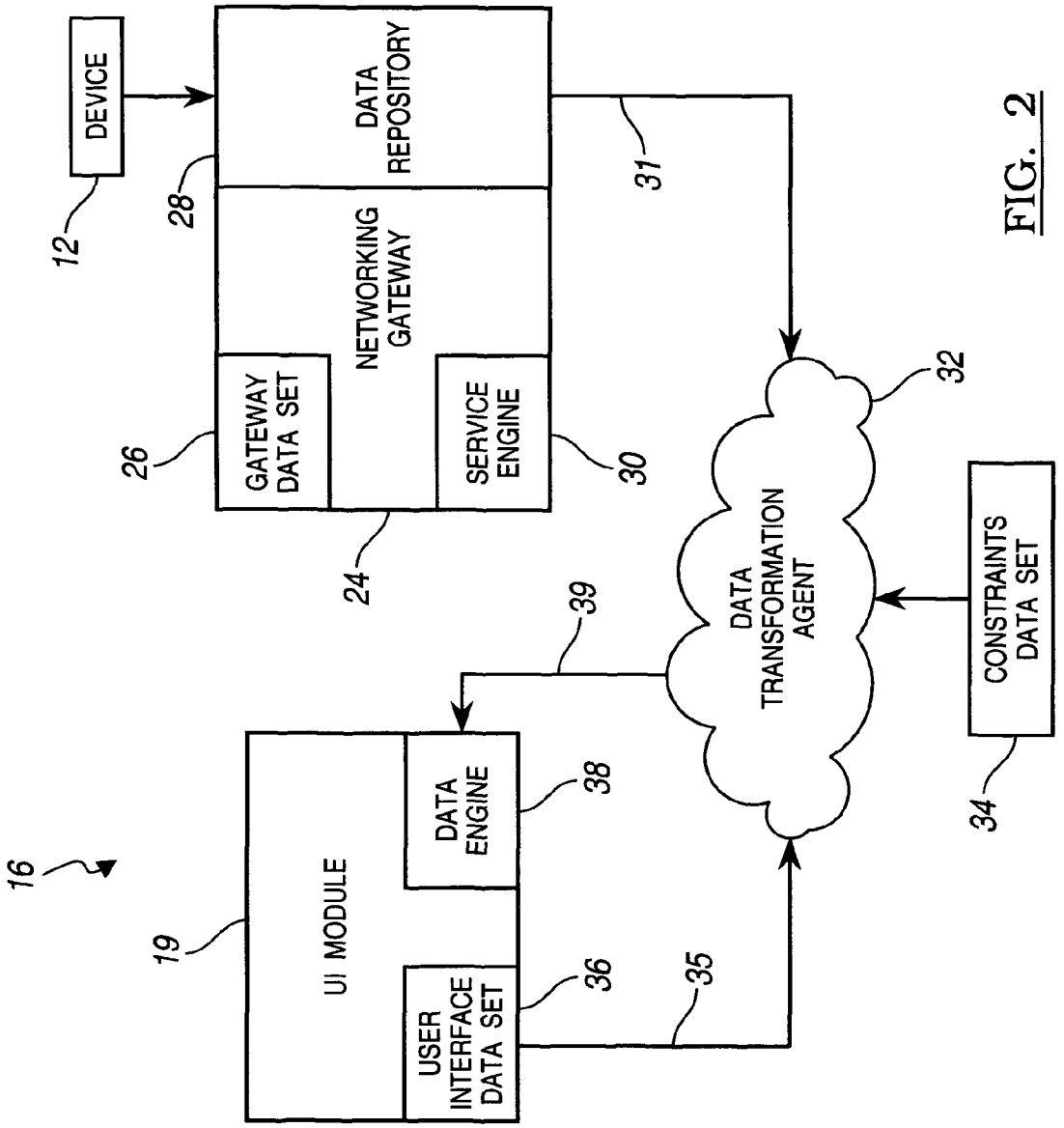
DEVICE
12
28
DATA REPOSITORY
NETWORKING GATEWAY
GATEWAY DATA SET
26
SERVICE ENGINE
30
24
31
32
DATA TRANSFORMATION AGENT
CONSTRAINTS DATA SET
34
39
16
19
UI MODULE
DATA ENGINE
38
USER INTERFACE DATA SET
36
35

FIG. 2

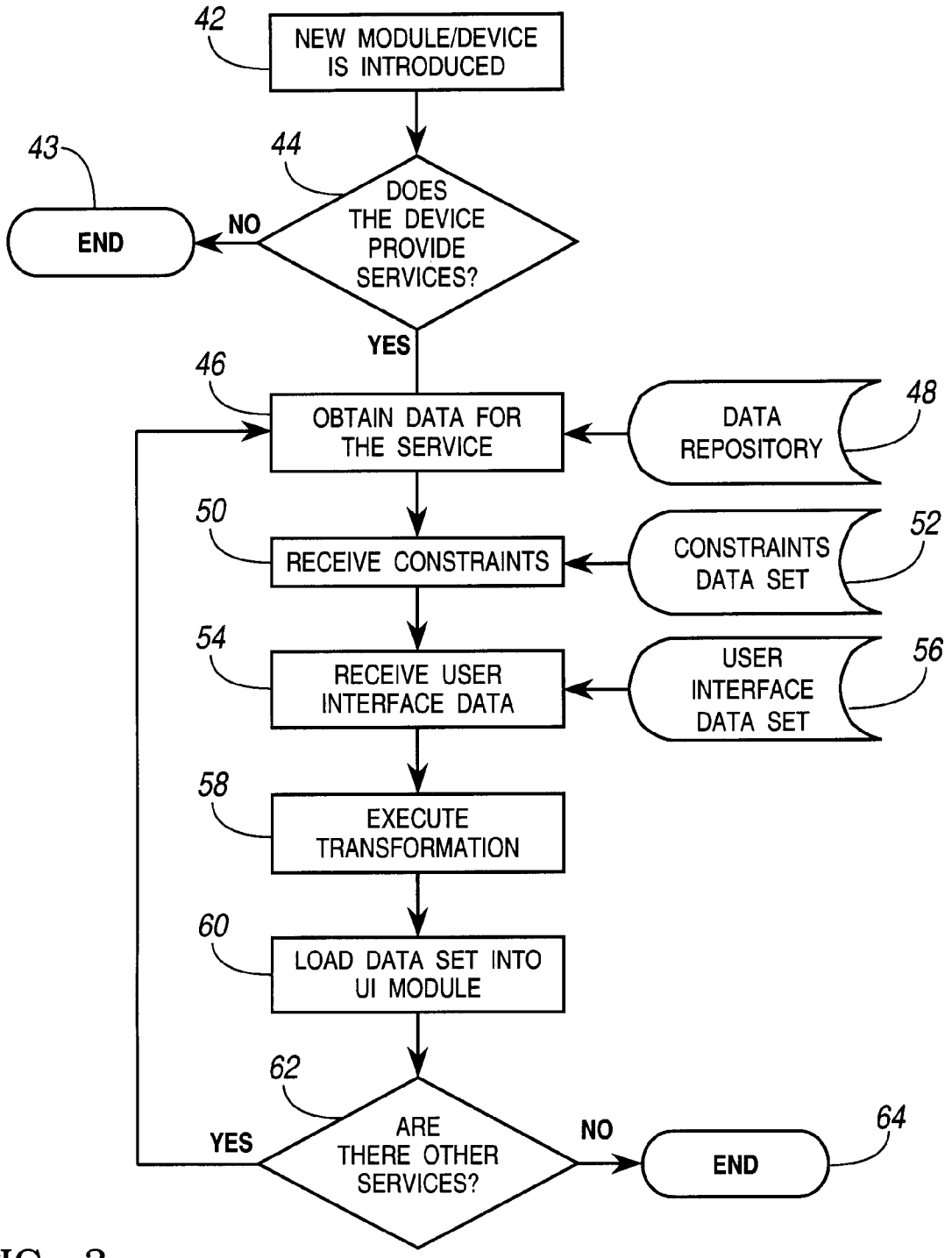
42
NEW MODULE/DEVICE IS INTRODUCED
43
44
DOES THE DEVICE PROVIDE SERVICES?
NO
END
YES
46
OBTAIN DATA FOR THE SERVICE
DATA REPOSITORY
48
50
RECEIVE CONSTRAINTS
CONSTRAINTS DATA SET
52
54
RECEIVE USER INTERFACE DATA
USER INTERFACE DATA SET
56
58
EXECUTE TRANSFORMATION
60
LOAD DATA SET INTO UI MODULE
62
ARE THERE OTHER SERVICES?
YES
NO
END
64

FIG. 3

USER INTERFACE SYSTEM FOR A VEHICLE

TECHNICAL FIELD

The present invention relates generally to a user interface system for a vehicle that enables access to an electronic device.

BACKGROUND OF THE INVENTION

The use of electronic devices in vehicles is common. Particularly, it is well known that consumers utilize devices such as phones, PDAs, and computers to access information. To facilitate the use of these devices, the vehicle typically includes a user interface that enables the user to access the electronic device and utilize services and/or applications located thereon. Conventionally, the vehicle user interface is specifically programmed to operate with an electronic device so as to utilize the specific applications and/or services available through the electronic device. Such programming typically requires manual programming by an authorized dealership or designer. Accordingly, the conventional user interface systems are incapable of dynamic programming or synchronization to enable access to services available through electronic devices.

The present invention was conceived in view of these and other disadvantages of conventional user interface systems.

SUMMARY OF THE INVENTION

The present invention discloses a user interface system and method for a vehicle that enables access to services available through an electronic device. In one embodiment, user interface system includes a networking gateway configured to receive a first data set from the electronic device for service discovery. A service engine is included, which is operable with the networking gateway. The service engine is configured to process the first data set and output a second data set that corresponds to the services. A data transformation agent receives the second data set and generates a third data set, wherein the third data set is in a predetermined format. A user interface module is included that is configured to communicate with the data transformation agent. The user interface module receives the third data set having the predetermined format and, based in part on the third data set, the user interface module provides an interface for the user to access the services available through the electronic device.

The method for accessing services available through the electronic device include receiving a first data set from the electronic device. The method also includes generating a second data set based on the first data set through the use of a networking gateway. The method further includes receiving the second data set at a data transformation agent. Another step includes generating a third data set through the use of a data transformation agent and receiving the third data set at a user interface module. The third data set is processed by the user interface module so as to provide the user access to the services available through the electronic device.

BRIEF DESCRIPTION OF THE DRAWINGS

The features of the present invention which are believed to be novel are set forth with particularity in the appended claims. The present invention, both as to its organization and manner of operation, together with further objects and advantages thereof, may be best understood with reference to the following description, taken in connection with the accompanying drawings in which:

FIG. **1** illustrates a vehicle having a user interface system that enables access to services available through an electronic device in accordance with an embodiment of the present invention;

FIG. **2** illustrates a block diagram of a user interface system in accordance with an embodiment of the present invention; and

FIG. **3** illustrates a flow chart of a method for enabling access to electronic devices through the use of a user interface system in accordance with an embodiment of the present invention.

DETAILED DESCRIPTION OF THE EMBODIMENTS

As required, detailed embodiments of the present invention are disclosed herein. However, it is to be understood that the disclosed embodiments are merely exemplary of the invention that may be embodied in various and alternative forms. The figures are not necessarily to scale, and some features may be exaggerated or minimized to show details of particular proponents. Therefore, specific functional details disclosed herein are not to be interpreted as limiting, but merely as a representative basis for the claims and/or as a representative basis for teaching one skilled in the art to variously employ in the present invention.

Referring to FIG. **1**, a vehicle **10** is illustrated that is configured to communicate and enable access to electronic devices including services and/or applications (collectively referred to as services) available via the electronic devices. These services include, but are not limited to, cellular phone service, satellite radio service, email services, computer application service and the like. In one aspect of the present invention, the electronic devices may be virtually any external device including, but not limited to, a personal digital assistant (PDA), a handheld computer, and the like.

As shown, vehicle **10** includes an instrument panel **14** having a user interface system **16**. The user interface system **16**, which may be referred to as an in-vehicle human machine interface (HMI), provides vehicle occupants information/data pertaining to vehicle **10**, its systems, and devices, including services available through an electronic device **12**. As such, user interface system **16** has a display unit **18**, a user interface module **19** and multiple selection devices **20**.

Display unit **18** is adapted to display information such as maps generated by a navigation system, audio system information, climate information, and services/applications that are accessible through the use of electronic device **12**. Furthermore, display unit **18** may be configured to receive inputs from a user. Selection devices **20** may be buttons or keys that are designated to effect certain functions by user interface system **16** and electronic device **12**. It is recognized that in alternative embodiments selection devices **20** may be embodied as "soft keys" that appear on the display of display unit **18**. User interface system **16** also includes a user interface module **19** having a controller that is capable of processing and storing data in memory. The controller of user interface module **19** may have stored therein at least one data set, which may describe default functions and capabilities of user interface system **16** including display unit **18**, user interface module **19**, and selection devices **20**.

As described in the foregoing, electronic device **12** may be a PDA, a handheld computer, a cellular telephone, a smart phone, a laptop and the like that is capable of providing services and applications for use by vehicle occupants. Electronic device **12** may also have one or more data sets stored in memory that describe or correspond to the services and/or

Ford Ex. 1015

applications available via device **12**. Alternatively, electronic device **12** may serve as a conduit through which the vehicle can access desired services remotely.

In either embodiment, electronic device **12** may be connected to user interface system **16** through the use of a port **15**, which includes universal serial bus (USB) ports and the like. However, although electronic device **12** is physically connected to user interface **16** through the use of a cable **17**, it is recognized that communications may occur wirelessly. For instance, it is contemplated by the present invention that electronic device **12** may communicate with user interface system **16** via a wireless protocol including, but not limited to bluetooth, wi-fi, and the like. As described above, unlike conventional systems, user interface system **16** is capable of automatic programming, reprogramming and/or synchronization with devices, such as electronic device **12**, to enable access to services available through the devices.

Referring to FIG. **2**, a block diagram of user interface system **16** in communication with electronic device **12** is illustrated. As shown, device **12** communicates with user interface system **16** in a manner so as to enable a user to access available services. User interface system **16** is capable of accessing the services available through device **12** by receiving and processing data sets from device **12**. In the illustrated embodiment, user interface system **16** includes user interface module **19**, a networking gateway **24**, and a data transformation agent **32**. It is recognized, however, that alternative embodiments, may have multiple user interface modules **19**. For example, a vehicle may include a first user interface module located the vehicle instrument panel and a second user interface module located in a rear seat entertainment unit.

In either embodiment, upon connection of device **12** to the vehicle (either by-wire or wirelessly), device **12** transmits a data set to user interface system **16**. Reception of the data set may be referred to as service discovery, wherein services available through device **12** are acknowledged by user interface system **16**.

The networking gateway **24** initially receives the data set. Networking gateway **24** includes a data repository **28**, a gateway data set **26**, and a service engine **30**. Service engine **30** is configured to establish communications with devices such as device **12** and to generate a corresponding data set in a desired format that describes the available services. In one embodiment, service engine **30** may be referred to as a vehicle services description language (VSDL) engine, which may be an extensible markup language (XML) based description of the services. The VSDL embodiment does not require heterogenous elements that are found in heterogenous systems (e.g., web service definition language (WSDL), simple object access protocol (SOAP), etc.).

Data repository **28** provides a plurality of default software constructs that describes communication parameters, features of device **12**, and services that may be available via device **12**. In one aspect of the invention, data repository **28** has data stored in a format that is based on the VSDL. As such, the default software constructs of data repository **28** may be embodied as XML data. Additionally, gateway data set **26** includes data that describes capabilities, functions, and features of the networking gateway. Based on the data available from gateway data set **26** and data repository **28**, service engine **30** generates a data set signal **31** that is received by a data transformation agent **32**. In one embodiment, data set signal **31** may be a VSDL dataset that is XML based.

Data transformation agent **32** may be embodied as a software program or data set containing a set of predetermined rules by which received data sets are processed. Accordingly, a constraints data set **34** may contain a plurality of constraints by which these rules are based. In one embodiment, the rules by which data sets are processed are implemented in an XML based vehicle constraints markup language (VCML). These constraints may be used to control the appearance of information displayed by the user interface system display unit (FIG. **1**) and ensure that proper functionality and service behavior by user interface system **16** occurs.

As such, the constraints data set **34** may contain certain data that ensures various performance parameters including, but not limited to, safety, security, regulatory, and vehicle design. The data of constraints data set **34** may include static and dynamic data, which may be loaded into the vehicle at any time. For example, in one embodiment, the data transformation agent having data from constraints data set **34** may be loaded into the user interface system simultaneously with data to be stored within data repository **28**.

As described in the foregoing, the user interface system includes user interface module **19**. User interface module **19** may include a user interface data set **36** and a data engine **38**. User interface data set **36** contains data which describes functions and features of the user interface module. For example, the user interface data set may include data that describes the number of buttons or keys **20** (FIG. **1**) as well as the screen size of display **18**. In one embodiment, the data contained by the user interface data set may be hard coded in a vehicle user interface markup language (VUML). In such an embodiment, the VUML is an XML based language.

Once user interface data set **36** is loaded into user interface module **19**, data transformation agent **32** receives a data set signal **35** which corresponds to the data within user interface data set **36**. As described above, data transformation agent **32** is configured to process data sets received. Accordingly, when data transformation agent **32** receives data sets **31** and **35**, a data set **39** is generated. Data set **39** includes data that has been certified by data transformation agent **32** for use by user interface module **19**. In one aspect of the invention, data set **39** may be a VUML data set that is XML based.

Data engine **38** is responsible for generic interaction with the user and may contain a specification in electronic form that also controls the appearance and/or function of the user interface module display. The specification, which may include XML based data, may be used by data engine **38** to ensure that buttons or keys on the user interface module effect desired user interface system functions operations. As such, the data signal **39** may be received by data engine **38** so as to enable the user interface system to provide a seamless interface for the user to access services available through electronic device **12**.

Now, referring to FIG. **3**, a flow chart illustrates a method for accessing services available through the electronic device. Block **42** illustrates a step wherein the electronic device is introduced or acknowledged. Block **44** illustrates a step wherein the user interface system, through the use of the networking gateway determines whether the electronic device offers any services (also referred to as service discovery). If the electronic device does not offer any services, the method terminates as indicated at block **43**. If the device does offer services, a block **46** occurs. At block **46**, in response to data provided by the data repository (block **48**), the user interface system obtains data that indicates the services available through the electronic device. As described above, the step of obtaining the data may occur through the use of the networking gateway (FIG. **2**).

At block **50**, the user interface system, via the data transformation agent receives constraints that provide a set of rules by which the data is processed. As shown by block **52**, the

constraints, embodied as data, may be stored in the constraints data set. As described in the foregoing, the constraints data set may include rules in an XML based format that control the manner in which the data transformation agent processes received data sets.

As depicted by block **54**, the user interface data is received via the data transformation agent. Block **56** depicts the user interface data set which includes data that describes the appearance and functions of the user interface module. Block **58** depicts a step wherein the data transformation agent executes a transformation of the data sets that are received from the user interface data set, the constraints data set, and the data set signal generated by the networking gateway. This transformation, in one embodiment, results in the generation of a VUML type data set, that is compatible with the user interface module. Accordingly, block **60** depicts a step wherein the processed or transformed data sets are loaded into the user interface module. Block **62** includes the step of determining whether additional services are available via the electronic device. If additional services are available, the method returns to block **46** where the foregoing method if repeated. If there exists no additional services, the method terminates at block **64**.

While the best mode for carrying out the invention has been described in detail, those familiar with the art to which this invention relates will recognize various alternative designs and embodiments for practicing the invention as defined by the following claims.

What is claimed:

1. A user interface system for a vehicle that enables a user to access services available through an electronic device, the system comprising:

a networking gateway configured to receive a first data set from the electronic device, the first data set identifying the services available through the electronic device;

a data repository that stores default software constructs relating to the services available through the electronic device;

a service engine operable with the networking gateway and the data repository, the service engine processing the first data set and outputting a vehicle services description language (VSDL) data set that corresponds to the services based at least in part upon the first data set and the default software constructs;

a data transformation agent for receiving the VSDL data set and at least one constraint, the data transformation agent generating a vehicle user interface markup language (VUML) data set based at least in part upon the VSDL data set and the at least one constraint; and

a user interface module configured to communicate with the data transformation agent, the user interface module receiving the VUML data set and, based in part on the VUML data set, the user interface module providing an interface for the user to access the services available through the electronic device.

2. The user interface system of claim **1**, wherein the user interface module includes:

a display unit having a display for providing information related to the services; and

a data engine configured to receive the VUML data set, the data engine containing a specification that controls appearance of the display upon receipt of the VUML data set.

3. The user interface system of claim **1**, wherein the user interface module includes a user interface data set that describes functions of the user interface module, the user interface data set being received by the data transformation agent and the data transformation agent generating the VUML data set based in part upon the user interface data set.

4. The user interface system of claim **1**, wherein the VSDL data set is compatible with the user interface module.

5. The user interface system of claim **1**, wherein the data transformation agent contains a predetermined set of rules by which the VUML data set is generated.

6. The user interface system of claim **5**, wherein the predetermined set of rules are comprised of an extensible markup language (XML) based vehicle constraints markup language (VCML).

7. The user interface system of claim **1**, wherein the networking gateway includes a gateway data set that contains data associated with at least one of functions and features of the networking gateway.

8. The user interface system of claim **1**, wherein the VSDL data set and the VUML data set have a format that is based on an extensible markup language (XML).

9. A method for accessing services available through an electronic device, the method comprising:

receiving a first data set from the electronic device at a networking gateway for a vehicle user interface system;

generating at the networking gateway a vehicle service description language (VSDL) data set based on the first data set through the use of a service engine;

receiving the VSDL data set and at least one constraint at a data transformation agent of the vehicle user interface system;

generating a vehicle user interface markup language (VUML) data set through the use of the data transformation agent, the VUML data set based at least in part upon the VSDL data set and the at least one constraint; and

receiving the VUML data set at a user interface module for the user interface system, wherein the VUML data set is processed by the user interface module to provide access to the services available through the electronic device.

10. The method of claim **9**, wherein the data transformation agent includes a predetermined set of rules by which the VUML data set is generated.

11. The method of claim **9**, wherein the user interface module includes a user interface data set that describes functions of the user interface module, the user interface data set being received by the data transformation agent and the data transformation agent generating the VUML data set based in part upon the user interface data set.

12. The method of claim **9**, wherein the networking gateway includes a gateway data set that contains data associated with at least one of functions and features of the networking gateway.

13. A user interface system for a vehicle that enables a user to access services available through an electronic device, the system comprising:

a networking gateway configured to receive a first data set from the electronic device, the networking gateway including a service engine, a data repository and a gateway data set, the networking gateway generating a vehicle services description language (VSDL) data set corresponding to the services available based upon the first data set using the service engine, the data repository and the gateway data set;

a user interface module having a display unit, a data engine and a user interface data set, the user interface module providing an interface for the user to access the services available through the electronic device;

a data transformation agent being operable with the networking gateway and the user interface module and

having in memory at least one constraint, the data transformation agent for transforming the user interface data set and the VSDL data set into a vehicle user interface markup language (VUML) data set based on the at least one constraint, the user interface data set, and the VSDL data set; and

wherein the data engine processes the VUML data set so as to enable the user to access the services available through the electronic device.

14. The user interface system of claim **13**, wherein the VSDL data set and the user interface data set have a format based on an extensible markup language (XML).

15. The user interface system of claim **13**, wherein the user interface data set contains data associated with at least one of functions and features of the user interface module.

16. The user interface system of claim **13**, wherein the gateway data set contains data associated with at least one of functions and features of the networking gateway.

17. The user interface system of claim **13**, wherein the VSDL data set contains data associated with the services available through the electronic device.

18. The user interface system of claim **13**, wherein the at least one constraint controls appearance of the display unit.

19. The user interface system of claim **1**, wherein the at least one constraint controls appearance of a display unit.

20. The method of claim **9**, wherein the at least one constraint controls appearance of a display unit.

* * * * *