US005955713A

United States Patent [19]

Titus et al.

[11] **Patent Number: 5,955,713**

[45] **Date of Patent: Sep. 21, 1999**

[54] **TILT SWITCH ARRAY FOR ELECTRONIC ORIENTATION DETECTION**

[75] Inventors: **John S. Titus**, Prior Lake, Minn.; **Leonard P Tetrault**, Northport; **John Peters, Jr.**, Center Moriches, both of N.Y.

[73] Assignees: **Circle Seal Corporation**, Ronkonkoma, N.Y.; **Joint Techno Concepts International, Inc.**, Westboro, Mass.

[21] Appl. No.: **08/943,780**

[22] Filed: **Oct. 3, 1997**

[51] **Int. Cl.**[6] **H01H 35/02**

[52] **U.S. Cl.** **200/61.52**; 33/366.11; 33/391; 200/277

[58] **Field of Search** 200/277, 188, 200/187, 225, 224, 61.52, 61.48, 61.51, 61.47; 33/391, 366.11, 366.24, 366.26

[56] **References Cited**

U.S. PATENT DOCUMENTS

2,450,780	10/1948	Bucklen, III	200/225
3,729,602	4/1973	Myers	200/61.52
3,812,308	5/1974	Bell et al.	200/61.45
3,927,286	12/1975	Fohl	200/61.52 X
4,090,040	5/1978	Berland	179/107
4,135,067	1/1979	Bitko	200/61.52
4,467,154	8/1984	Hill	200/61.45
4,513,183	4/1985	Hill	200/61.45
4,618,746	10/1986	Schwob et al.	200/61.45
4,668,846	5/1987	Klumpp	200/61.45
5,006,676	4/1991	Bogut et al.	200/61.52
5,630,280	5/1997	Crossan, Jr.	33/366.11

Primary Examiner—Renee S. Luebke

Attorney, Agent, or Firm—Merchant, Gould, Smith, Edell, Welter & Schmidt, P.A.

[57] **ABSTRACT**

A tilt switch array is used to determine the orientation of an object relative to an upwards direction. The array includes at least one pair of electrodes within a housing, diametrically opposed along a measurement axis. A conductor equidistantly surrounds each electrode to form a tilt switch gap therebetween. A moveable conducting element within the housing closes the gap between one electrode and its associated conductor under certain orientation conditions of the measurement axis relative to an upwards direction. A number of pairs of electrodes may be placed within the housing, with associated measurement axes so that the orientation of any one of the measurement axes may be detected.

17 Claims, 8 Drawing Sheets

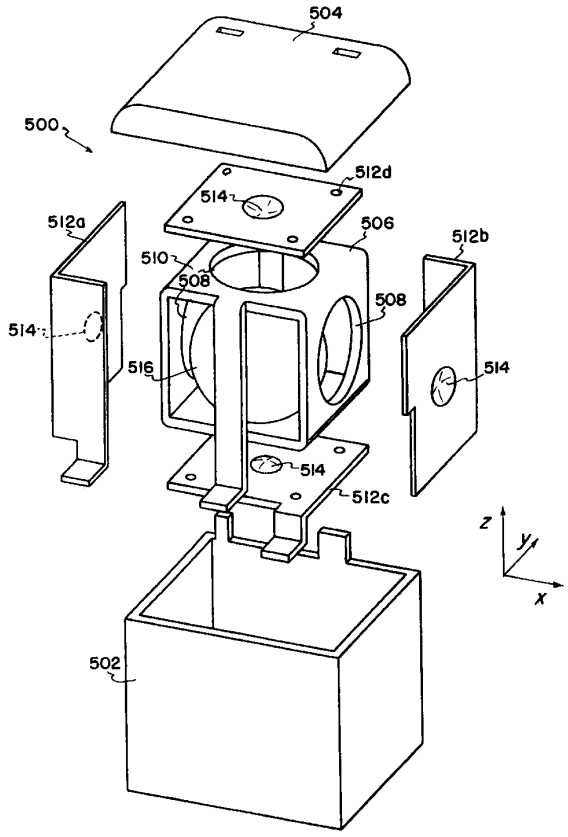

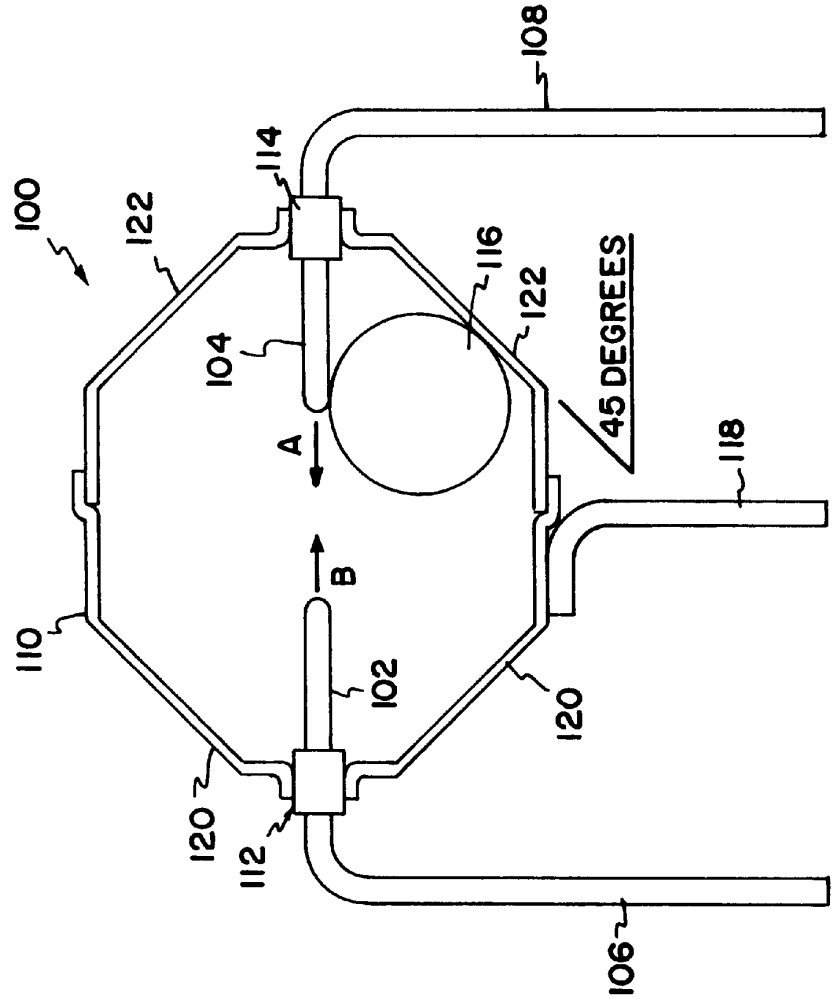
100
122
114
108
104
116
122
45 DEGREES
A
B
118
110
102
120
120
112
106

FIG. 1B

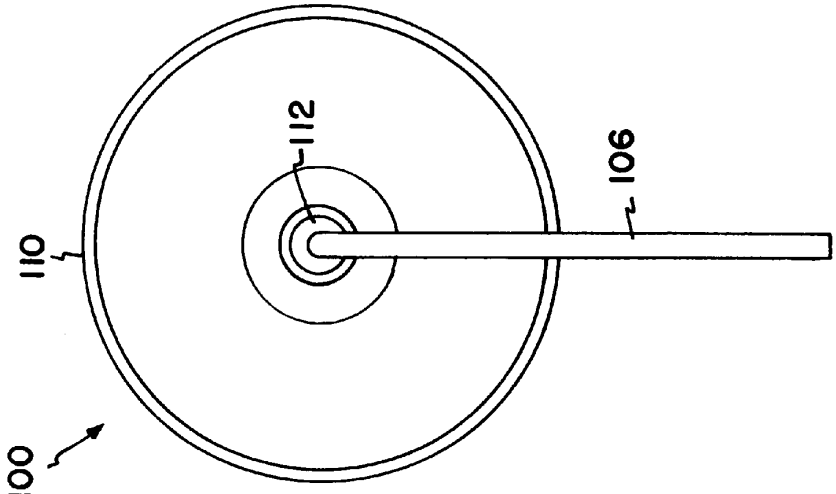
110
112
106
100

FIG. 1A

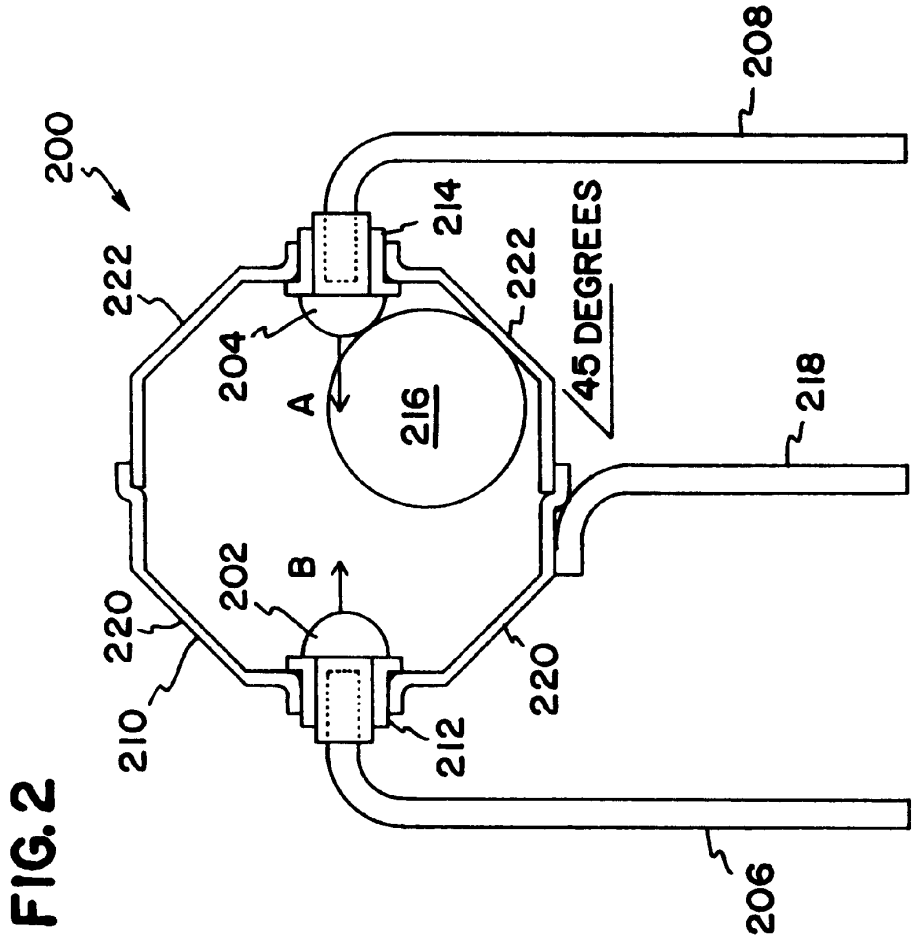
200
208
214
222
222
45 DEGREES
204
A
216
218
202
B
220
220
210
212
206

FIG. 2

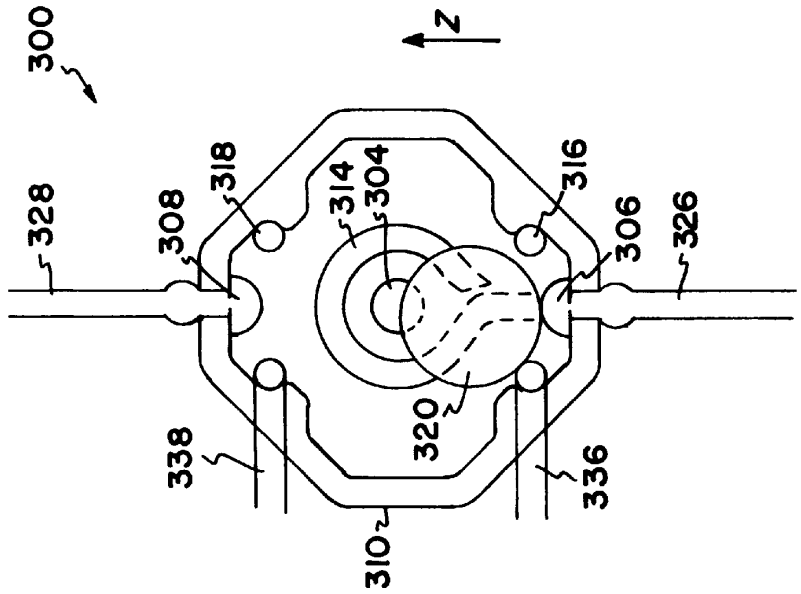
300
Z
328
308
318
314
304
316
306
326
338
320
336
310

FIG. 3B

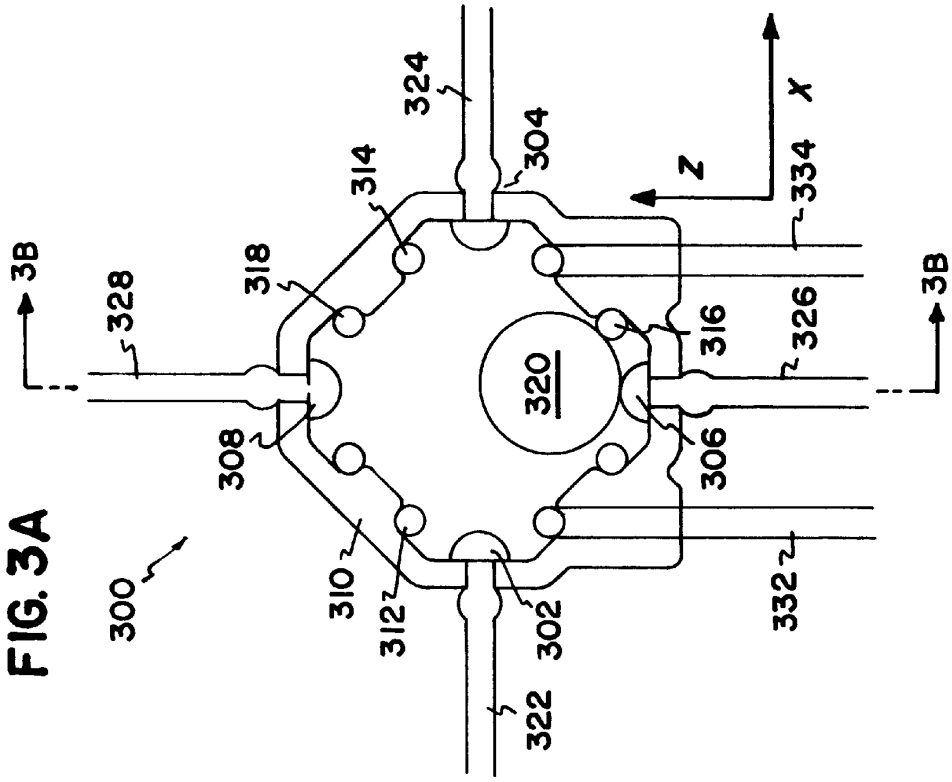
3B
328
318
314
324
304
Z
X
334
316
326
3B
320
308
306
300
310
312
302
332
322

FIG. 3A

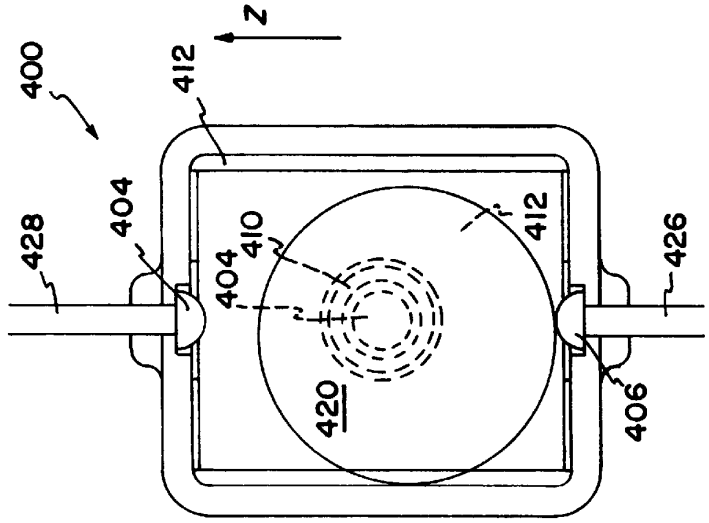
400
412
Z
428
404
410
404
412
426
420
406

FIG. 4B

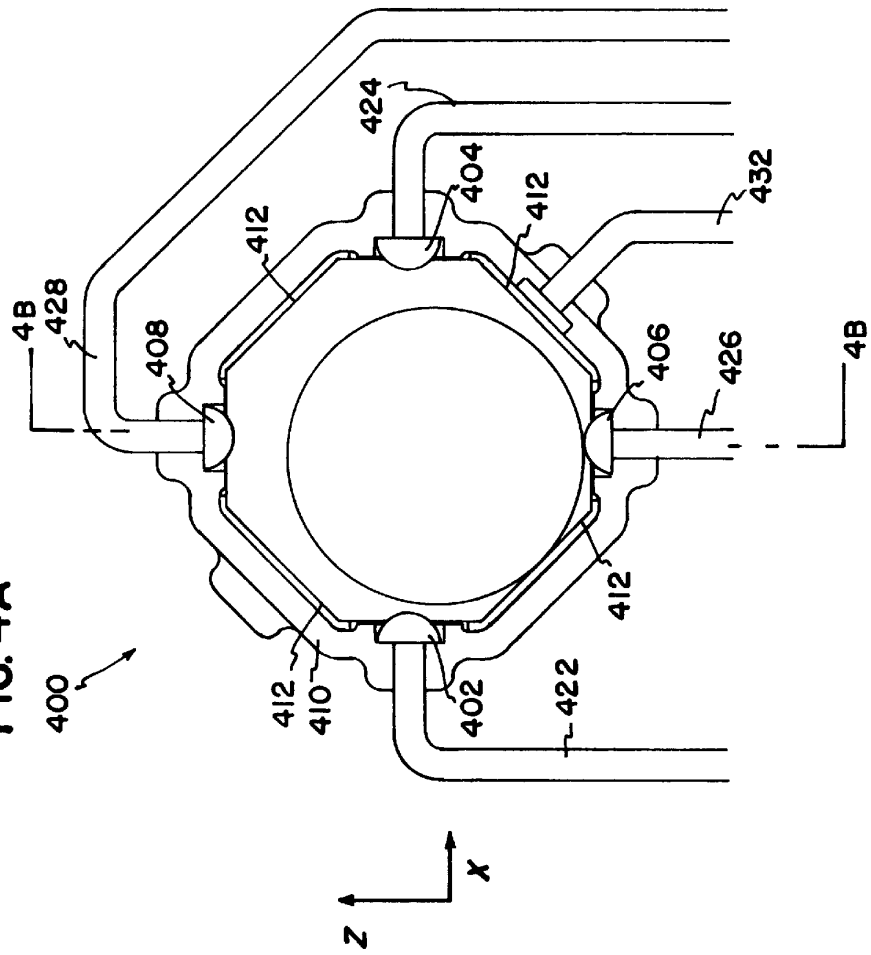
400
4B
428
408
412
424
404
412
432
406
426
4B
412
412
410
402
422
Z
X

FIG. 4A

FIG. 5

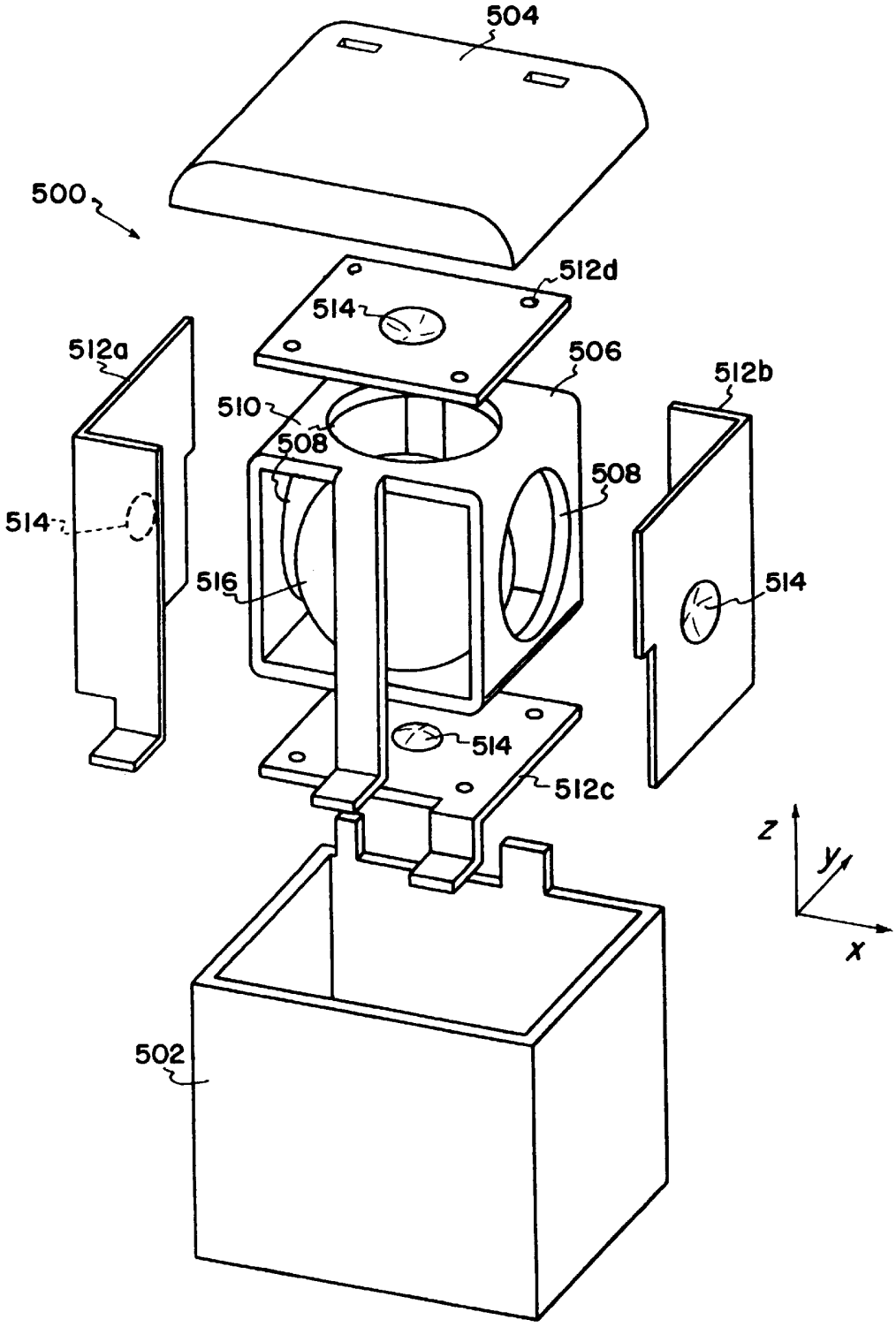
504
500
512d
514
512a
506
512b
510
508
508
514
516
514
514
512c
z
y
x
502

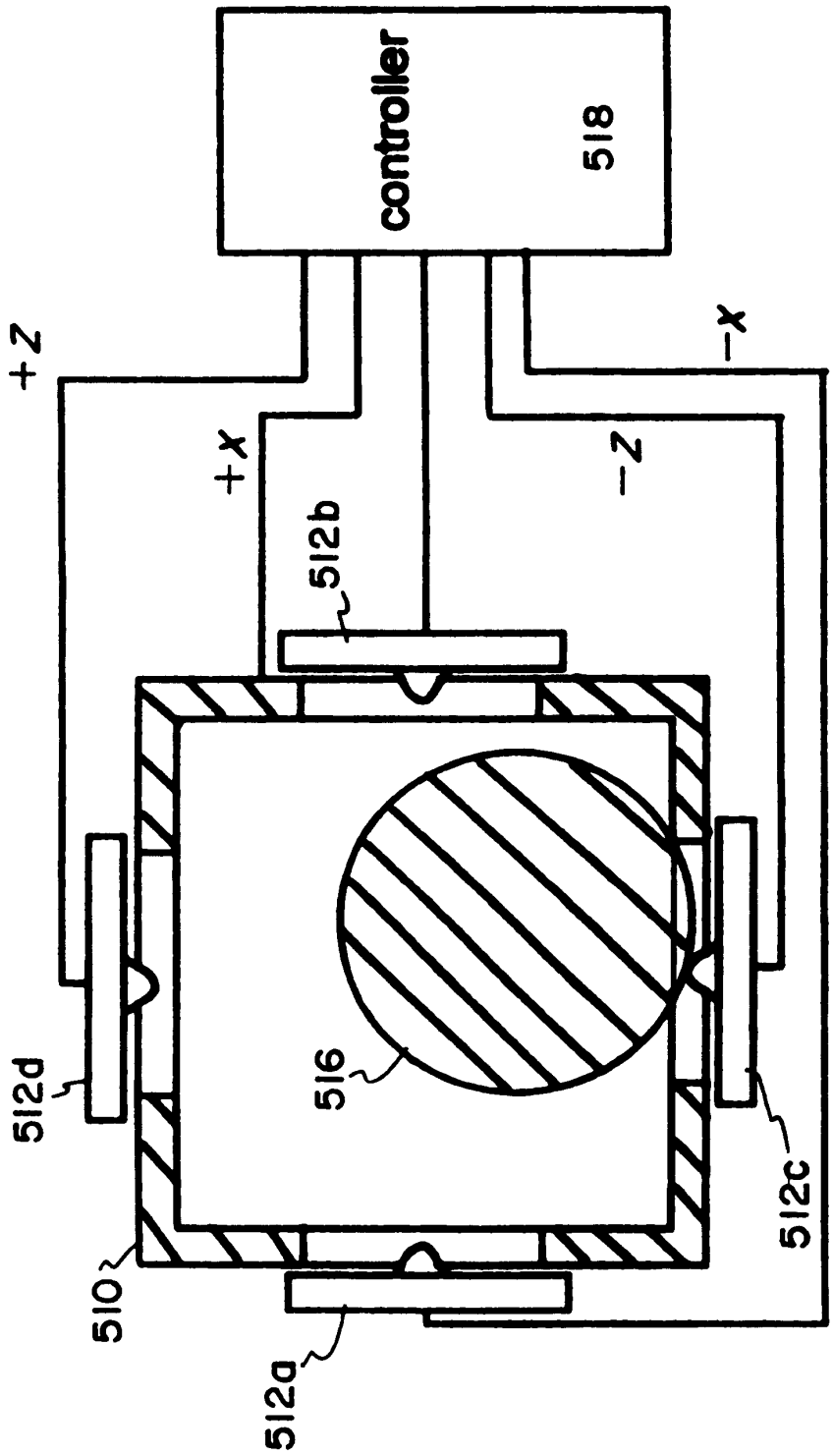

FIG. 6

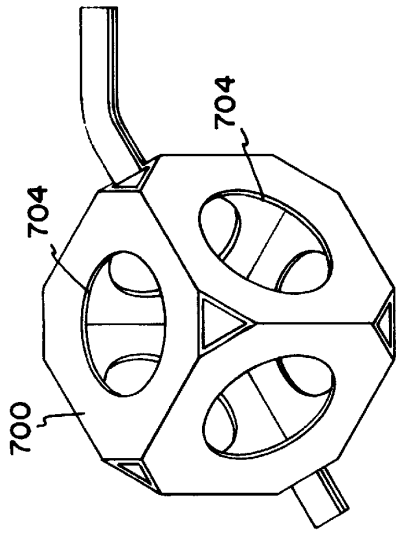

FIG. 7B

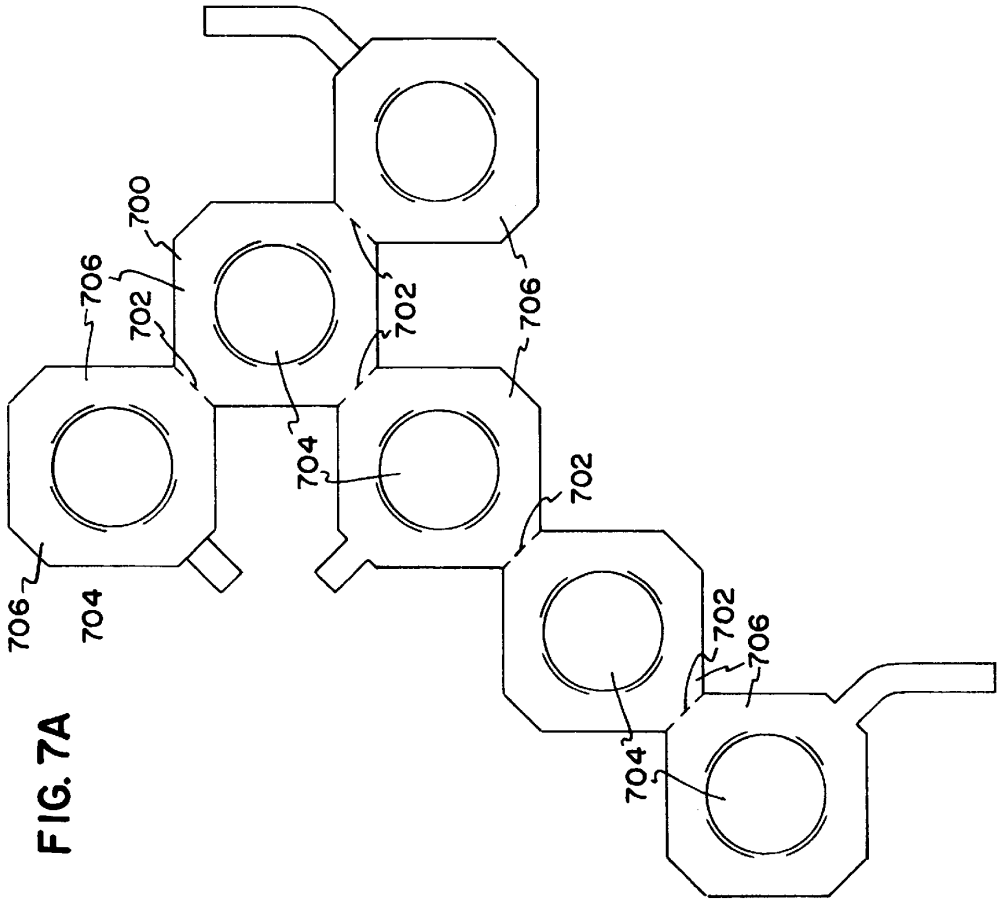

FIG. 7A

FIG. 8

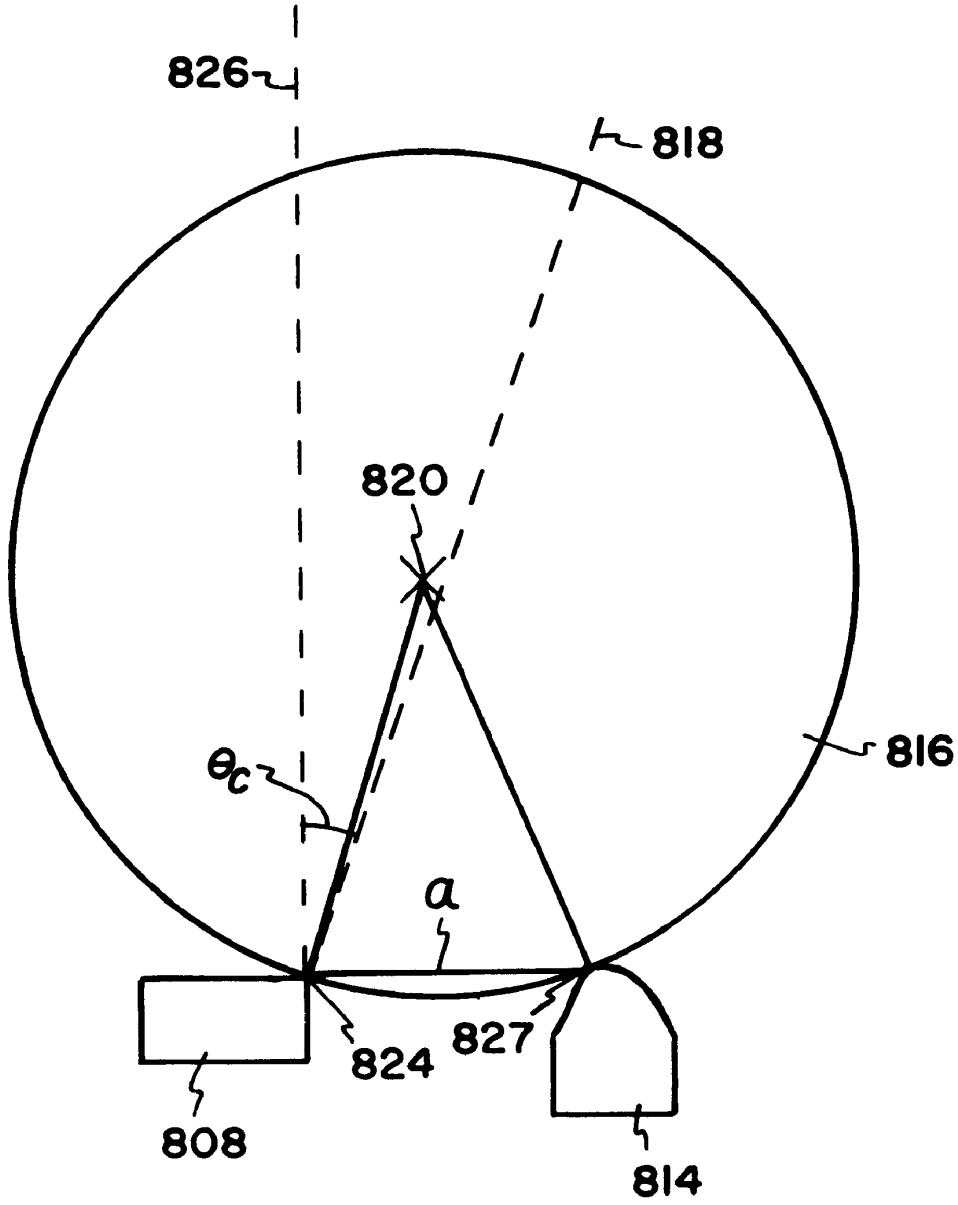

TILT SWITCH ARRAY FOR ELECTRONIC ORIENTATION DETECTION

BACKGROUND OF THE INVENTION

This invention relates in general to an apparatus for detecting the orientation of an object, and particularly to a tilt switch for detecting a particular orientation.

Tilt switches and jitter switches are used in portable electronic devices, such as radio transceivers and paging units, to detect whether the unit is in an non-vertical orientation, and to detect movement of the device. Tilt switches may be used for generating a signal when non-vertical orientation is detected, for example in "mandown" situations where police officers are injured. Further, tilt switches operating as jitter switches can be used for detecting continued motion of a portable device, the lack of such motion typically causing the generation of an alert signal.

A conventional tilt switch includes a glass envelope that contains a ball of mercury. A pair of electrodes are situated at one end of the envelope and the mercury forms an electrical contact between the electrodes when the switch is oriented so that the mercury extends to the ends of the envelope containing the electrodes, thus forming an electrical contact therebetween. In certain applications, it is important to measure whether an electronic device is oriented upwards, downwards, or at an angle in between. For some applications, it is possible to use a number of conventional tilt switches together, where each tilt switch is mounted at a different orientation so that the closing or opening of particular switches indicates the relative orientation of the device. However, the use of several individual tilt switches may take up significant real-estate in the device, and the individual switches must typically be mounted in precise orientation relative to each other in order for the combination of tilt switches to be effective.

Therefore, there is a need for a single tilt switch that can detect one of several orientations. Such a tilt switch should take up less volume within the device, and require that the orientation of only the single tilt switch within the device be precisely established, rather than the orientation of a number of switches.

SUMMARY OF THE INVENTION

To overcome the limitations in the prior art, including those described above, and to overcome other limitations that will become apparent upon reading and understanding the present specification, one particular embodiment of the present invention is directed to a tilt switch having an outer housing and an inner assembly disposed within the outer housing, the inner assembly having a first pair of apertured, opposing sides. A first plate is disposed between each respective side of the first pair of opposing sides and the outer housing, each first plate having a projection thereon to form an electrode region. The first plates are electrically isolated from each other and from the inner assembly, each electrode region and associated aperture perimeter in a respective opposing side together forming a switch gap. An electrically conductive element is movable within the inner assembly, so as to make electrical contact across one of the switch gaps by contacting one of the electrode regions and an associated aperture perimeter.

In another particular embodiment of the invention, a tilt switch array includes a housing having a first axis and a first detector having first and second electrodes aligned parallel to the first axis. The electrodes are disposed within the housing so as to oppose each other to form a first space therebetween. A first conductor has a perimeter substantially surrounding the first electrode and a second conductor has a perimeter substantially surrounding the second electrode. The first and second conductors are each nonparallel with respect to the first axis. A conducting element is movable within the first space so as to contact an electrode and an associated conductor.

The above summary of the present invention is not intended to describe each illustrated embodiment or every implementation of the present invention. Advantages and attainments, together with a more complete understanding of the invention, will become apparent and appreciated by referring to the following description and claims taken in conjunction with the accompanying drawings.

BRIEF DESCRIPTION OF THE DRAWINGS

Referring now to the drawings in which like reference numbers represent corresponding parts throughout:

FIG. **1**A illustrates an end view of a single axis tilt switch according to one embodiment of the invention;

FIG. **1**B illustrates a side view of the single axis tilt switch of FIG. **1**A;

FIG. **2** illustrates a single axis tilt switch array according to another embodiment of the present invention;

FIG. **3**A illustrates a cross-section through a two axis tilt switch array according to another embodiment of the invention;

FIG. **3**B illustrates an orthogonal view through the tilt switch array of FIG. **3**A, as viewed through section **3**B—**3**B;

FIG. **4**A illustrates a cross-section through a two axis tilt switch array according to another embodiment of the invention;

FIG. **4**B illustrates an orthogonal view through the tilt switch array of FIG. **4**A, as viewed through section **4**B—**4**B;

FIG. **5** illustrates another multi-axis tilt switch array according to another embodiment of the present invention;

FIG. **6** illustrates a schematic cross section through the multi-axis tilt switch array of FIG. **5**;

FIG. **7**A illustrates an embodiment of an inner housing for a three axis tilt switch array in unfolded form;

FIG. **7**B illustrates the inner housing of FIG. **7**B in folded form; and

FIG. **8** illustrates the geometry of a ring and an electrode of a tilt switch gap.

While the invention is amenable to various modifications and alternative forms, specifics thereof have been shown by way of example in the drawings and will be described in detail. It should be understood, however, that the intention is not to limit the invention to the particular embodiments described. On the contrary, the intention is to cover all modifications, equivalents, and alternatives falling within the spirit and scope of the invention as defined by the appended claims.

DETAILED DESCRIPTION

In the following description of the illustrated embodiments, reference is made to the accompanying drawings which form a part hereof, and in which is shown by way of illustration, various embodiments in which the invention may be practiced. It is to be understood that other embodiments may be utilized and structural changes may be made without departing from the scope of the present invention.

The present invention is directed to a tilt switch array. In one particular embodiment, a single tilt switch unit includes

two or more tilt switch gaps, each of which can be closed by a metal ball, or other conducting element, free to move within the device. The tilt switch gaps are arranged along orthogonal axes, so that the orientation of these orthogonal axes relative to a downwards position may be measured. The present invention has application in small electronic devices in which an up/down orientation is to be measured. Examples of such electronic devices include radio transceivers, pagers, devices for locating buried electrical utilities and also electronic animal collars, as taught in U.S. Pat. No. 5,794,569. One advantage provided by the invention concerns the degree of control over the cone angle over which the tilt switch provides an "up" signal.

FIGS. **1**A and **1**B illustrate one particular embodiment for the invention for detecting the orientation of a tilt switch array, generally indicated as **100**, relative to an upward position direction. FIG. **1**A illustrates an end view of such a tilt switch array **100** and FIG. **1**B illustrates a cross section through the tilt switch array **100**.

The tilt switch array **100** includes two centered electrodes **102** and **104** that are diametrically opposed and lying along a single axis of the tilt switch **100**. The electrodes **102** and **104** are connected to respective external leads **106** and **108**. The electrodes **102** and **104** are enclosed within a housing **110** with respective insulating seals **112** and **114** to allow the electrodes **102** and **104** to pass through from inside the housing. A conducting ball **116** is disposed within the housing **110** and is free to move within the housing **110** under external forces, as may be imparted to the ball **116** by gravity or acceleration due to motion.

The outer surface of the housing **110** is connected to a housing electrode **118**. The housing **110** is electrically conducting, so that there is an electrically conductive path from the housing electrode **118** to, for example, the second lead **108** through the housing **110**, the ball **116**, and the second electrode **104**, when the ball **116** simultaneously contacts the inner surface of the housing **110** and the electrode **104**, as illustrated.

The housing is shaped so that those portions of the housing **110** surrounding the electrodes **102** and **104** form an angle, in this case 45°, relative to the axis lying between the electrodes **102** and **104**. For example, the housing **110** includes a frustrated conical portion **120** surrounding the first electrode **102**, and a second frustrated conical section **122** surrounding the second electrode **104**. Thus, the ball **116** contacts the second electrode **104** and the right portion **122** of the housing **110** when the electrode **104** points in an upward direction or points within a cone no more than 45° away from an upward direction. The second electrode **104** is defined to point in the direction A, as shown. Thus, the second tilt switch between the housing lead **118** and the second lead **108** is closed when the second electrode **104** is pointing within ±45° of an upward direction.

Similarly, the first tilt switch between the first lead **106** and the housing lead **118** is closed when the ball **116** simultaneously contacts the first portion **120** of the housing **110** and the first electrode **102**. The switch between the first lead and the housing lead **118** is closed when the first electrode **102** points within ±45° of an upward direction. The first electrode **102** is defined to point in the direction labeled "B."

When neither the first electrode **102** nor the second electrode **104** is pointing within ±45° of an upward direction, there is no stable position for the ball **116** to contact either electrode **102** or **104**. Thus, neither the first or second tilt switches are closed when the tilt switch array **100** is in this position.

Another embodiment of a single axis tilt switch array **200** is illustrated in FIG. **2**. The tilt switch array **200** includes a housing **210** with first and second leads **206** and **208** and a housing lead **218** for attachment to an external circuit. The housing **210** has first and second conical portions **220** and **222** around respective first and second electrodes **202** and **204**. A ball **216** is contained within the housing **210** and is free to move around therein, to form contacts between the housing **210** and either of the electrodes **202** and **204**. Here, the tilt switch array **200** is similar to that illustrated in FIG. **1**, except the electrodes **202** and **204** have round heads. Each electrode **202** and **204** may be a semi-tubular rivet with respective leads **206** and **208** contacted inside the respective tubes. Insulating bushings **212** and **214** electrically insulate the housing **210** from the electrodes **202** and **204**.

Both of the single axis tilt switch arrays **100** and **200** may include gas-tight sealed housings **110** and **210** where the housing is filled with an inert gas in order to prevent corrosion of the electrically conducting surfaces within the housings **110** and **210**. The inner surface of the housing **110** and **210** may be plated with a highly conducting metal, for example, gold or copper. Likewise, the electrodes **102** and **104**, and **202** and **204**, and the electrically conducting balls **116** and **216** may also be coated with a highly conducting metal such as gold or copper.

It will be appreciated that the angle of the frustrated conical sections of the housings may be chosen to be either larger or smaller than 45° in order to close the tilt switch when it is aligned within a larger or smaller angle relative to the upwards direction,

It will also be appreciated that the single axis tilt switch arrays may be modified to accept a second pair of electrodes disposed along an axis orthogonal to the axis between the first pair of electrodes so that the tilt switch array may be used for detecting orientation along two different axes relative to an upward direction. Additionally, a third pair of electrodes may be provided along an axis mutually orthogonal to the first two electrode axes in order to permit the detection of the orientation of the tilt switch array along three directions.

FIGS. **3**A and **3**B illustrate one particular embodiment of the invention that permits the detection of the orientation of two orthogonal axes relative to an upward direction.

The tilt switch array **300** includes an insulated housing **310** that has two pairs of mutually orthogonally arranged electrodes therein. The first pair of electrodes **302** and **304** are disposed along the x-axis, and the second pair of electrodes **306** and **308** are disposed along the z-axis, orthogonal to the x-axis.

Each electrode **302**, **304**, **306**, and **308** has an associated lead extending outwardly from the housing **310** for connection to an external circuit. Surrounding each electrode **302**, **304**, **306**, and **308** is a respective metallic ring **312**, **314**, **316**, and **318**. Each ring **312**, **314**, **316**, and **318** has an associated lead **332**, **334**, **336**, and **338** extending through the housing **310** for connection to the external circuit. The external circuit permits the user to determine which particular tilt switch, i.e. electrode/ring combination in the tilt switch array, is closed by the ball **320**.

The position and diameter of each ring relative to its respective electrode is chosen so that the tilt switch array **300** can detect when an electrode is directed to within ±45° of an upward direction. For example, as illustrated, the ball **320** rests on the electrode **306** and its associated ring **316**, thus closing the electrical gap therebetween. If the tilt switch array **300** is tilted so that the z-axis is directed at more than

a selected angle, θ_s, then the ball **320** falls out from the gap between the electrode **306** and ring **316**. The ball **320** may then find another stable position in a gap between another electrode **302**, **304**, or **308** and its associated ring **312**, **314** and **318** that points to within $\pm\theta_s$ of an upward direction. In certain applications, θ_s may be selected to be 45°.

It will be appreciated that this embodiment may be adapted for detection of orientation along three axes, with the addition of a third pair of electrodes oriented orthogonally to the first two pairs of electrodes, and with concomitant rings surrounding the electrodes.

Another particular embodiment of a two-axis tilt switch array **400** is illustrated in FIGS. **4**A and **4**B. In this embodiment, an insulated housing **410** has disposed therein four electrodes **402**, **404**, **406**, and **408**, in pairs directed along orthogonal axes x and z. Each electrode **402**, **404**, **406**, and **408** has an associated lead **422**, **424**, **246**, and **428** for connection to an external circuit for determining the orientation of the tilt switch array **400**. A conducting liner **412** is positioned within the housing **410**, the liner **412** substantially covering the inner surface of the housing **410**, apart from those portions immediately surrounding the electrodes **402**, **404**, **406**, and **408**. The lining **412** is electrically isolated from each of the electrodes **402**, **404**, **406**, and **408** by gaps therebetween. The walls of the housing **410** form frustrated conical portions surrounding each of the electrodes **402**, **404**, **406**, and **408** in a manner similar to that shown in FIGS. **1**A and **2**. The ball **420** is free to move within the housing **410**, and forms an electrical contact between the lining **412** and any electrode **402**, **404**, **406** or **408** that is pointing in a direction within ±45° of an upward direction. Thus, the orientation of two axes of the tilt switch array **400**, namely the x and z-axes, relative to an upward direction may be determined in response to which of the tilt switches formed by the electrodes **402**, **404**, **406**, and **408** and the lining **412** is closed by the ball **420**.

FIG. **5** illustrates one particular embodiment of the invention for detecting orientation of the tilt switch array **500** relative to two orthogonal axes. In the case shown, the tilt switch array **500** detects orientation of the x- and z-axes relative to the upward direction. FIG. **5** illustrates an exploded view of the tilt switch array **500**. The housing **502** and lid **504** enclose all the components, other than electrical connections (not shown). Inside the housing **502** is an inner assembly **506**. The inner assembly **506** has apertures **508** on opposing walls **510**. Plates **512***a*–**512***d* are inserted between the opposing walls **510** and the housing **502**. Each plate **512***a*–**512***d* has a raised portion **514** in the center, raised in the direction of the conducting ball **516** which is centrally located but free to move within the inner assembly **506**.

The tilt switch array **500** operates in the following manner, which is described with reference to FIG. **6**, a schematic cross-section in the x-z plane of the tilt switch array **500**. The plates **512***a*–**512***d* are electrically isolated from each other, and from the inner assembly **506**, which acts as a common. In any a particular orientation, the ball **516** falls to the lowest point within the inner assembly **506** under the pull of gravity. Over a wide range of angles, this position is reached when the conducting ball **516** rests against the raised portion **514** and the edge of the aperture **508**. When in such a condition, the conducting ball **516** bridges the gap between the raised portion **514** and the edge of the aperture **508**, forming an electrically conducting path therebetween. Each of the plates **512***a*–**512***d* is connected to a controller **518**, as is the inner assembly **506**. When the controller **518** detects which of the plates **512***a*–**512***d* is in electrical contact with the inner assembly **506**, then the orientation of the tilt switch array **500** relative to a downward direction can be obtained. For the axis set illustrated, when the ball forms a connection between the −z plate **512***c* and the inner assembly **516**, the controller determines that the array's +z axis is pointing upwards. Reorientation of the tilt switch array **500** so that the conducting ball **516** bridges the gap between the assembly **506** and one of the other plates **512***a*, **512***b*, **512***d* is detected by the controller **518** when another plate **512***a*, **512***b* or **512***d* is connected to the inner assembly **506** by the conducting ball **516**.

It will be appreciated that the embodiment illustrated in FIG. **5** is for illustrative purposes only and does not limit the invention. For example, the plates **512***a*–**512***d* may be replaced by other components that provide contact for the ball **516**, that is centrally located within the aperture **508** of the inner assembly **506**. Similarly, the inner assembly **506** may simply be a number of separate conducting rings with their apertures positioned around the respective raised portions **514**.

The conducting ball **516** may be formed of metal, or of a conducting rubber. The conducting ball **516** may also be a ball of mercury, particularly if the tilt switch array **500** is built sufficiently small that the surface tension of the mercury is sufficient to maintain an overall ball-like shape.

It will be appreciated that the tilt switch array **500** need not detect the orientation of two axes, but may be used simply to detect the orientation of one axis, for example, the orientation of the z-axis. This may be achieved by removing the +x and −x plates **512***a* and **512***b*, or by simply ignoring the information generated by the +x and −x plates. It will further be appreciated that the inner assembly **506** may be provided with opposing walls on all six sides, each with an aperture **508** therein. Additionally, the tilt **30** switch array **500** may be provided with three pairs of plates **512** orthogonally arranged. Such an embodiment permits the detection of which axis out of all three axes is closest to being vertical.

The inner assembly may be formed from a single, stamped metal sheet which is folded into shape. For example, FIG. **7**A illustrates a single stamping **700** which may be folded at joints **702** to form the inner housing **700** shown in FIG. **7**B. The inner housing may be essentially cubic, as illustrated. The inner assembly **700** is illustrated having six apertures **704**, one aperture **704** in each side wall, providing for a tilt switch array operational with respect to three orthogonal axes.

Referring back to FIG. **5**, an important parameter for the user of the tilt switch array **500** is the range of angle through which the tilt switch array **500** may be tilted before the ball **516** leaves the gap between the raised portion **514** and the side of the aperture **508**, thus opening the circuit. This is discussed with reference to FIG. **8**, which schematically illustrates a raised portion **814** and one edge of a ring, or aperture **808**, with a ball **816** resting therebetween. The ball **816** is assumed to be spherical, and its center of mass at the center of the sphere. FIG. **8** illustrates a cross-section taken through the plane described by the center of the ball **816** and the point of contact **822** and **824** on the electrode **814** and the ring **808**, respectively. An isosceles triangle is drawn between these three points **820**, **822** and **824**, with the equal sides have a length r, equal to the radius of the ball **816**. The dashed lines **826** and **828** indicate different vertical axes. The first vertical axis **826** illustrates the situation where the ring **808** is horizontally placed relative the electrode **814**. A vertical line from the ball's center of gravity, at X **820** intersects the line L, length a, lying between the contacting points **822** and **824**. Therefore, the ball **816** sits in the gap

between the electrode **814** and the ring **808**. However, if the system is rotated, so that the vertical axis now lies along dashed line **828**, then a vertical line drawn from the center of gravity at **820** no longer intersects the line between the two contact points **822** and **824**, and the ball's position is unstable and it will fall out from the ring.

The angle, Θ_c, through which the tilt switch array can be rotated before a he ball **816** falls out from the ring can be shown to be given by

$$\Theta_c = \sin^{-1}\frac{a}{2r}.$$

Thus, by judicious selection of a, the separation between contact points **822** and **824** of the electrode and the ring, and r, the radius of the ball **816**, the designer of the tilt switch array may select the angular tilt range over which the tilt switch array indicates that a particular axis of the tilt switch array is pointing downwards.

For example, in the tilt switch array illustrated in FIG. **6** detecting the relative orientation of two orthogonal axes to the downward direction, it may be desired simply to determine which axis is pointing more "upwards" than the other. In such a case, the critical angle θ_c may be set at 45°. Therefore, as the tilt switch array **600** is rotated, the ball **516** escapes from one aperture **508** and is immediately trapped by an adjacent aperture **508**. Therefore, as the array **600** is rotated, there is very little "dead time" when the ball **516** is not trapped in one of the gaps of a tilt switch.

In real manufacturing situations, it may be easier to hold tolerances sufficiently tight to have a critical angle of 40° rather than 45°. Such a selection would allow increased angular coverage by the tilt switch array, and maintain minimize non-responsive angle ranges, while accepting reasonable manufacturing tolerances.

Alternatively, it may be desired to indicate which axis is pointing upwards only when that axis is within a few degrees of the vertical direction. Therefore, the critical angle may be set to be small, for example, ranging from 5° to 10°. In this case, there is a wide range of orientation angles over which none of the tilt switches in the tilt switch array are closed.

The point of the electrode that contacts the ball may not lie in the plane of the ring. It will be appreciated that, in such a case, the separation distance between the electrode and its associated ring/conducting perimeter and the diameter of the ball may be selected to provide a predetermined critical angle.

It will be appreciated that the tilt switch arrays disclosed herein may be used as jitter switches for detecting motion in addition to detecting orientation. In a jitter switch, the conducting ball makes interrupted contact with one or more of the tilt switches in the array due to its motion. For example, if the tilt switch array is used in an electronic unit that is attached to a pet animal, such as a dog, then the motion of the dog as it walks or runs may cause the conducting ball within the tilt switch array to make only intermittent contact with one or more of the tilt switches within the array. The detection of such intermittent operation may be used as an indicator that the animal is in motion.

Jitter operation of a switch may be slowed by providing a damping fluid within the tilt switch array. Viscous forces act on the conducting ball to slow the movement of the ball within the housing under small applied forces, and so the response time of the ball may be increased. Accordingly, the addition of damping fluid may increase the amount of motion required to initiate jitter-type operation.

The foregoing description of the various embodiments of the invention has been presented for the purposes of illustration and description. It is not intended to be exhaustive or to limit the invention to the precise form disclosed. For example, it is possible that pairs of electrodes may be aligned on axes where the axes are not orthogonal to each other, but simply nonparallel. Many modifications and variations are possible in light of the above teaching. It is intended that the scope of the invention be limited not by this detailed description, but rather by the claims appended hereto.

What is claimed is:

1. A tilt switch array, comprising:

an outer housing;

an inner assembly disposed within the outer housing, the inner assembly having a first pair of apertured, opposing sides;

a first plate disposed between each respective side of the first pair of opposing sides and the outer housing, each first plate having a projection thereon to form an electrode region, the first plates being electrically isolated from each other and the inner assembly, each electrode region and associated aperture perimeter in a respective opposing side forming a switch gap; and

an electrically conductive element movable within the inner assembly so as to make electrical contact across one of the switch gaps by contacting one of the electrode regions and an associated aperture perimeter.

2. The tilt switch of claim **1**, wherein the first pair of apertured, opposing sides define a first axis, the inner assembly includes a second pair of opposing, apertured sides defining a second axis nonparallel with respect to the first axis, and further comprising second plates disposed between apertured sides of the second pair of sides and the outer housing, each second plate having a projection thereon to form a second electrode region, the second plates being electrically isolated from each other and the inner assembly, each second electrode region and associated aperture perimeter in one of the second pair of opposing sides forming a switch gap.

3. The tilt switch array of claim **2**, wherein the first and second axes are orthogonal.

4. The tilt switch array of claim **1**, wherein the electrically conductive element is a metal sphere.

5. The tilt switch array of claim **1**, further comprising damping fluid disposed within the housing to dampen motion of the electrically conductive element.

6. The tilt switch array of claim **1**, wherein the switch gap has a length and the electrically conductive element has a diameter selected so that the tilt switch array has a critical angle less than 45°.

7. The tilt switch array of claim **1**, wherein the inner assembly is formed from a single, folded sheet of metal.

8. A tilt switch array for detecting orientation, the tilt switch array comprising:

a housing having a first axis;

a first electrode pair having first and second electrodes aligned parallel to the first axis and disposed within the housing, the first and second electrodes opposing each other to form a first space therebetween, a first conducting perimeter substantially surrounding the first electrode within the housing and a second conducting perimeter substantially surrounding the second electrode within the housing, the first and second conducting perimeters each being nonparallel to the first axis;

an inner assembly, electrically isolated from the electrodes, with first and second apertures, conducting edges of first and second apertures forming the first and second conducting perimeters, respectively;

plates disposed between the inner assembly and the housing, the plates having projecting portions thereon to form the electrodes; and

a conducting element movable within the first space so as to contact one of the electrodes and the conducting perimeter surrounding the one of the electrodes.

9. The tilt switch array of claim **8**, further comprising electrical connectors, connected to the first and second electrodes, the connectors being connectable to an external circuit.

10. The tilt switch array of claim **8**, wherein the perimeters are substantially circular.

11. The tilt switch array of claim **8**, wherein the movable conducting element has a first diameter and the conducting perimeters have a second diameter, the first and second diameters being selected so that the tilt switch array has a critical angle less than approximately 45°.

12. The tilt switch array of claim **8**, wherein the first and second conducting perimeters are electrically connected together.

13. The tilt switch array of claim **8**, wherein the conducting element is a metal sphere.

14. The tilt switch array of claim **8**, further comprising damping fluid within the housing to dampen motion of the conducting element.

15. The tilt switch array of claim **8**, wherein the housing has a second axis nonparallel with respect to the first axis, and further comprising a second electrode pair having third and fourth electrodes aligned with respect to the second axis, electrically isolated from the inner assembly and disposed within the housing, the third and fourth electrodes opposing each other to form a second space therebetween, the second space intersecting the first space, a third conducting aperture edge of the inner assembly substantially surrounding the third electrode and a fourth conducting aperture edge of the inner assembly substantially surrounding the fourth electrode, the third and fourth aperture edges each being nonparallel to the second axis, the conducting element being movable within the second space.

16. The tilt switch array of claim **15**, wherein the first and second axes are orthogonal.

17. The tilt switch array of claim **15**, further comprising a third electrode pair having fifth and sixth electrodes aligned with respect to a third axis nonparallel to the first and second axes, electrically isolated from the inner assembly and disposed within the housing, the fifth and sixth electrodes opposing each other to form a third space therebetween, the third space intersecting the first and second spaces, a fifth conducting aperture edge of the inner assembly substantially surrounding the fifth electrode and a sixth conducting aperture edge of the inner assembly substantially surrounding the sixth electrode, and wherein the conducting element is loosely disposed within the housing so as to be free to move within the first, second and third spaces of the first, second and third axis electrode pairs.

* * * * *