US006200219B1

(12) **United States Patent**
Rudell et al.

(10) **Patent No.: US 6,200,219 B1**
(45) **Date of Patent: *Mar. 13, 2001**

(54) **TOY VEHICLES WITH INTEGRAL MOTION SENSITIVE GAME DISPLAY**

(75) Inventors: **Elliot Rudell**, 1619 Gramercy Ave., Torrance, CA (US) 90501; **George Foster**, Long Beach; **Richard Kamrath**, Rolling Hills Estates, both of CA (US)

(73) Assignee: **Elliot Rudell**, Torrance, CA (US)

(*) Notice: This patent issued on a continued prosecution application filed under 37 CFR 1.53(d), and is subject to the twenty year patent term provisions of 35 U.S.C. 154(a)(2).

Subject to any disclaimer, the term of this patent is extended or adjusted under 35 U.S.C. 154(b) by 0 days.

This patent is subject to a terminal disclaimer.

(21) Appl. No.: **09/189,617**

(22) Filed: **Nov. 9, 1998**

Related U.S. Application Data

(63) Continuation-in-part of application No. 09/095,402, filed on Jun. 10, 1998.

(51) **Int. Cl.**[7] **A63B 9/00**

(52) **U.S. Cl.** ..... **463/37**; 463/6; 463/7; 463/36; 273/148 B; 345/156; 345/157; 345/163

(58) **Field of Search** ..... D14/117.1–117.9; 463/6, 7, 36, 37, 43–47; 273/148 B; D21/324, 329, 424; 345/156–157, 163

(56) **References Cited**

U.S. PATENT DOCUMENTS

5,059,958 * 10/1991 Jacobs et al. 340/706
5,526,481 * 6/1996 Parks et al. 395/155
5,692,956 * 12/1997 Rifkin 463/37

* cited by examiner

Primary Examiner—Jessica J. Harrison
Assistant Examiner—Carmen D. White
(74) *Attorney, Agent, or Firm*—Irell & Manella LLP

(57) **ABSTRACT**

A hand held electronic game which includes a vehicle that can be moved by a player. The vehicle may have a visual display which displays a graphic image. The video game may further have a sensor that senses the motion of a vehicle axle and a processor which varies the graphic image in response to the detected motion of the vehicle to simulate the motion of the vehicle.

12 Claims, 5 Drawing Sheets

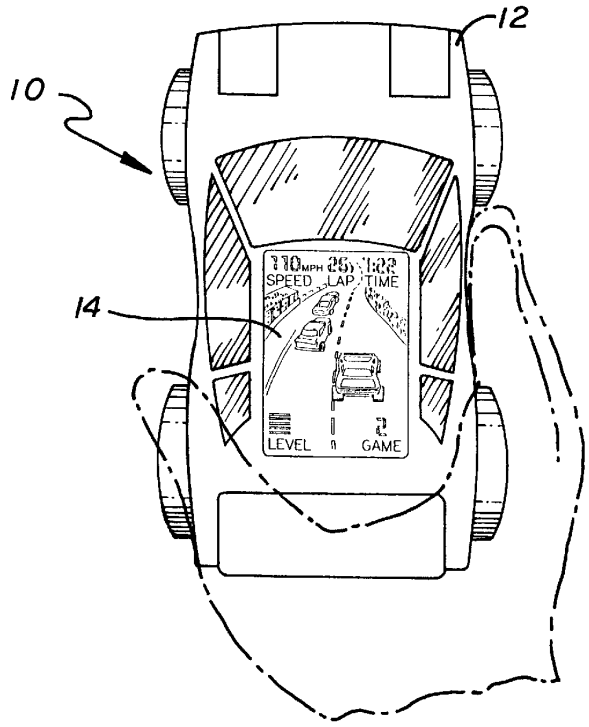

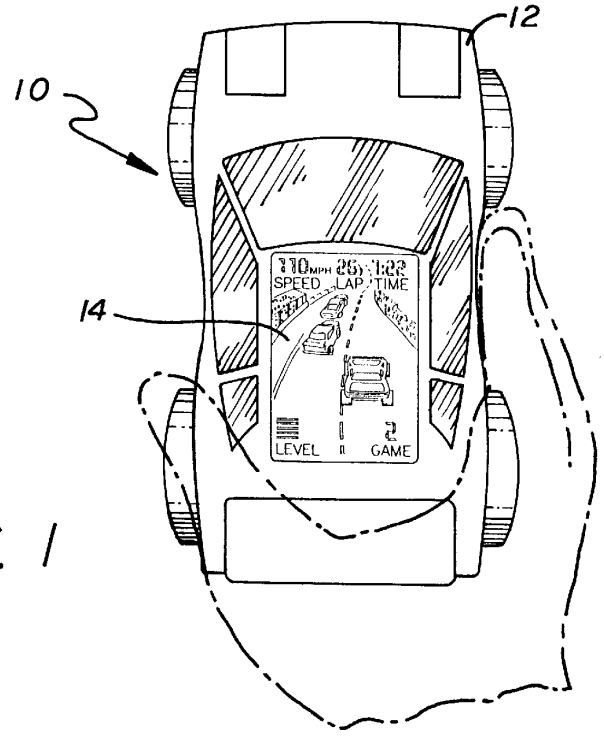

FIG. 1

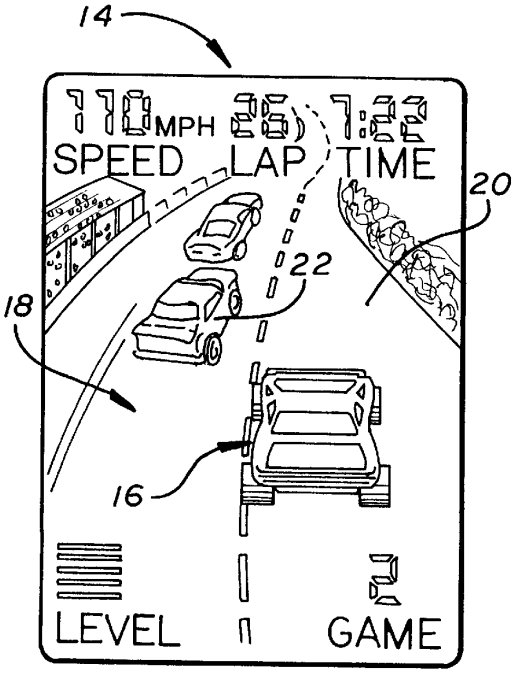

FIG. 2

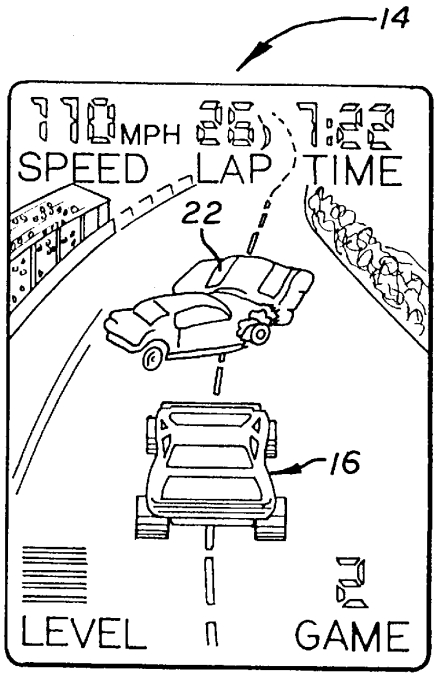

FIG. 3

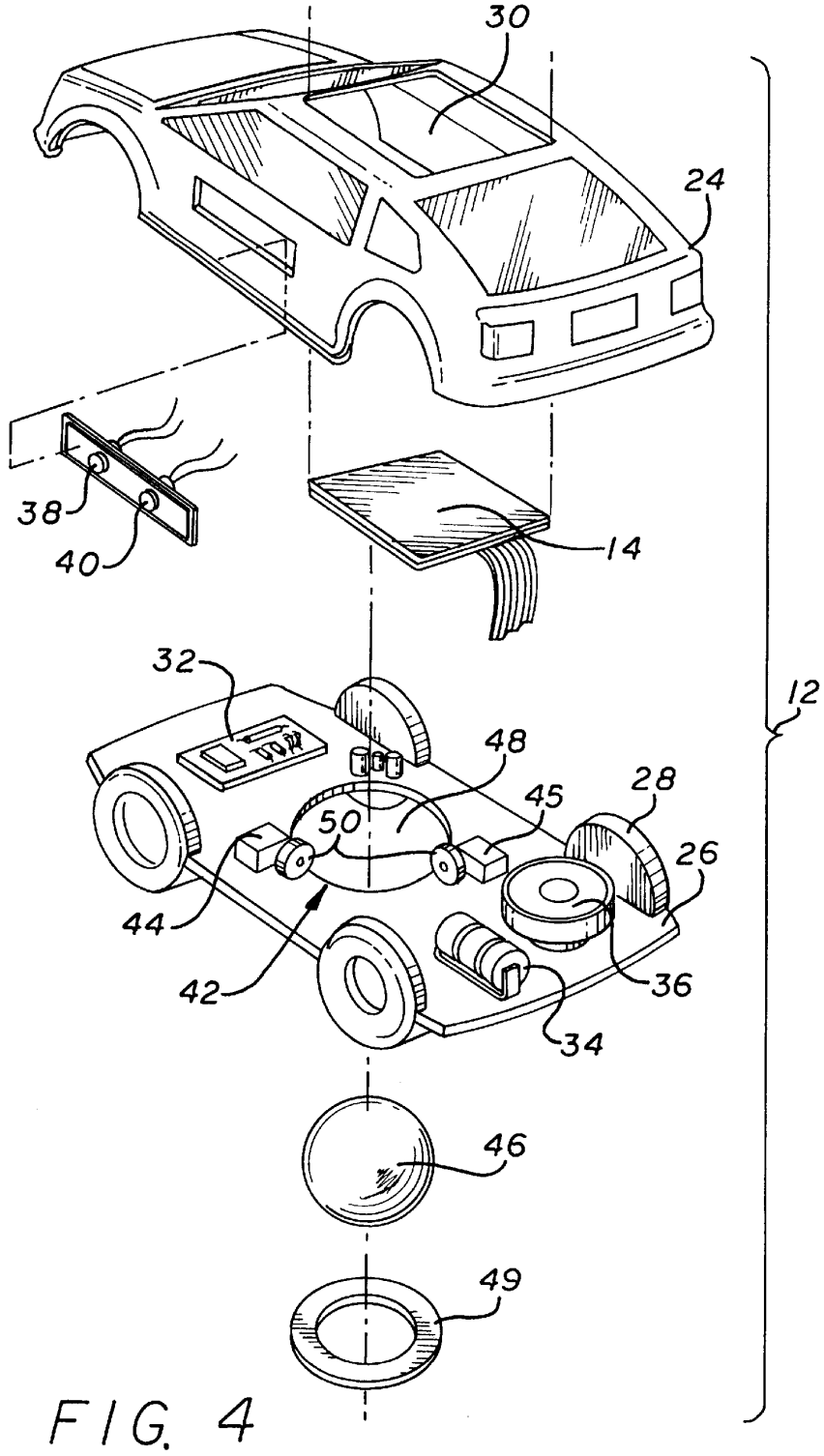

FIG. 4

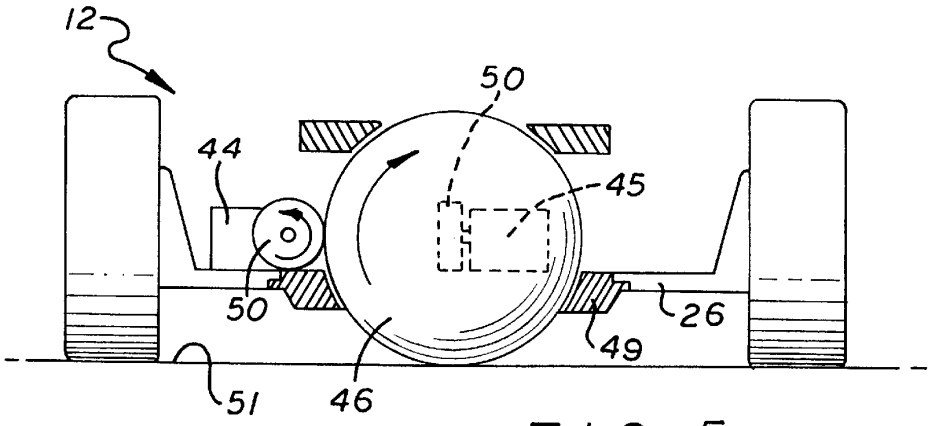
12
50
44
45
50
26
49
51
46

FIG. 5

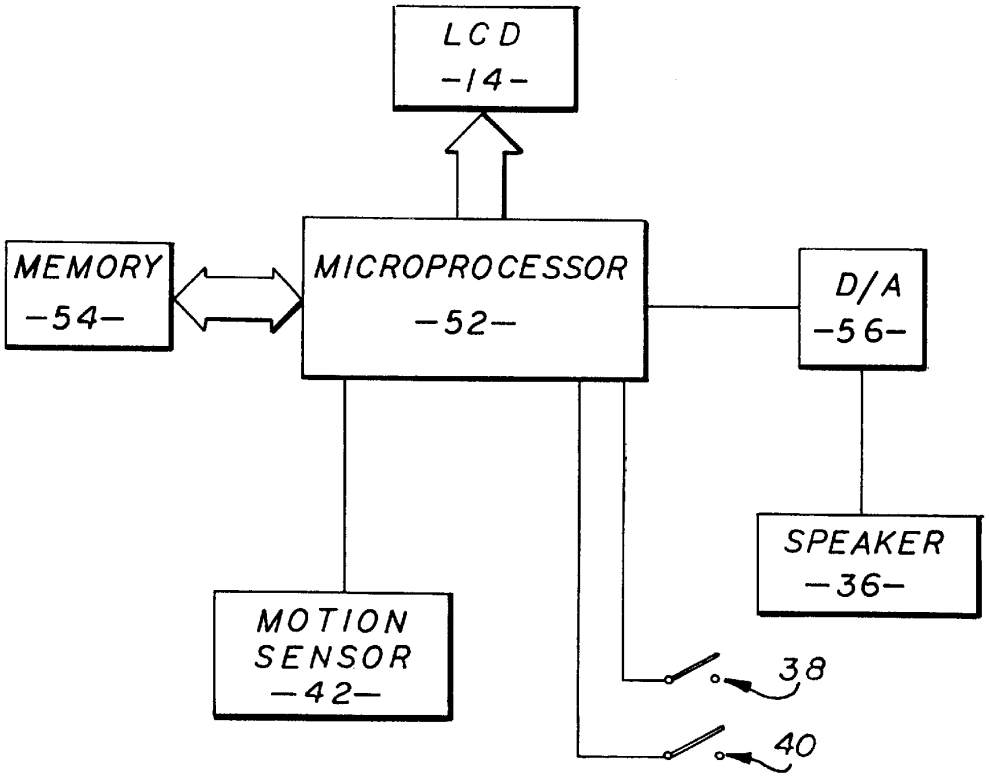
LCD
-14-
MEMORY
-54-
MICROPROCESSOR
-52-
D/A
-56-
SPEAKER
-36-
MOTION
SENSOR
-42-
38
40

FIG. 6

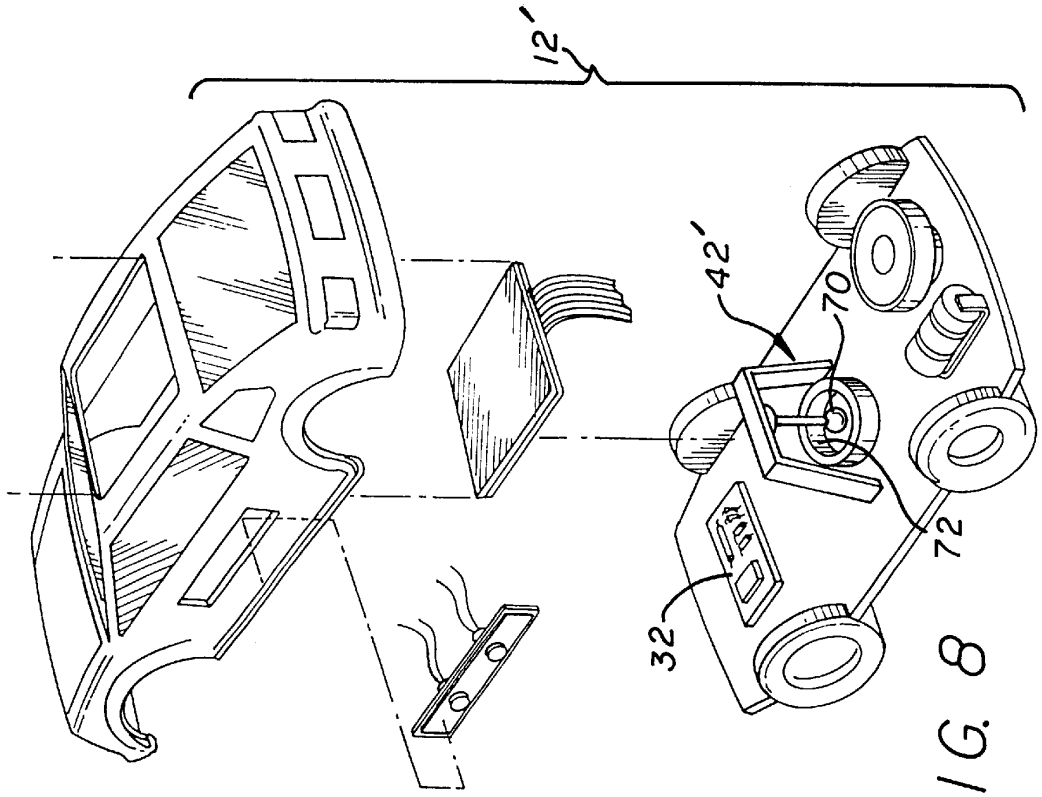
12'
42'
70
72
32

FIG. 8

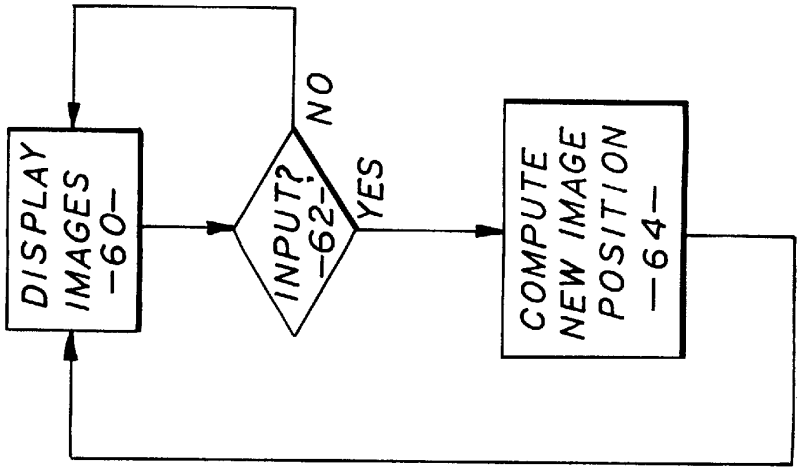
DISPLAY IMAGES -60-
INPUT? -62-
NO
YES
COMPUTE NEW IMAGE POSITION -64-

FIG. 7

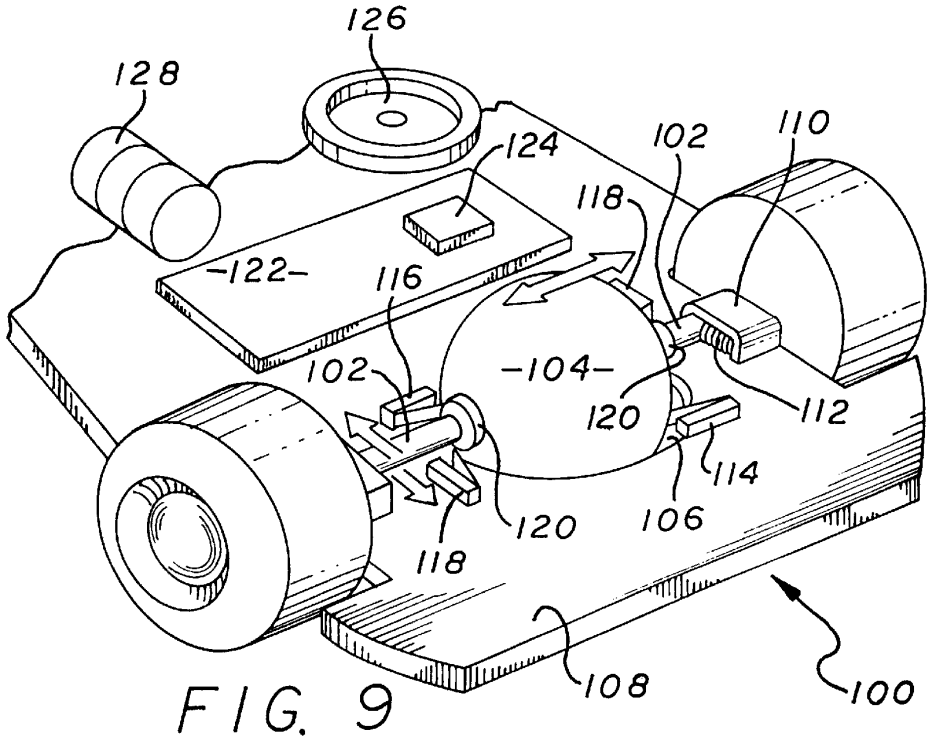
126
128
124
102
110
118
-122-
116
102
-104-
120
112
114
120
106
118
108
100

FIG. 9

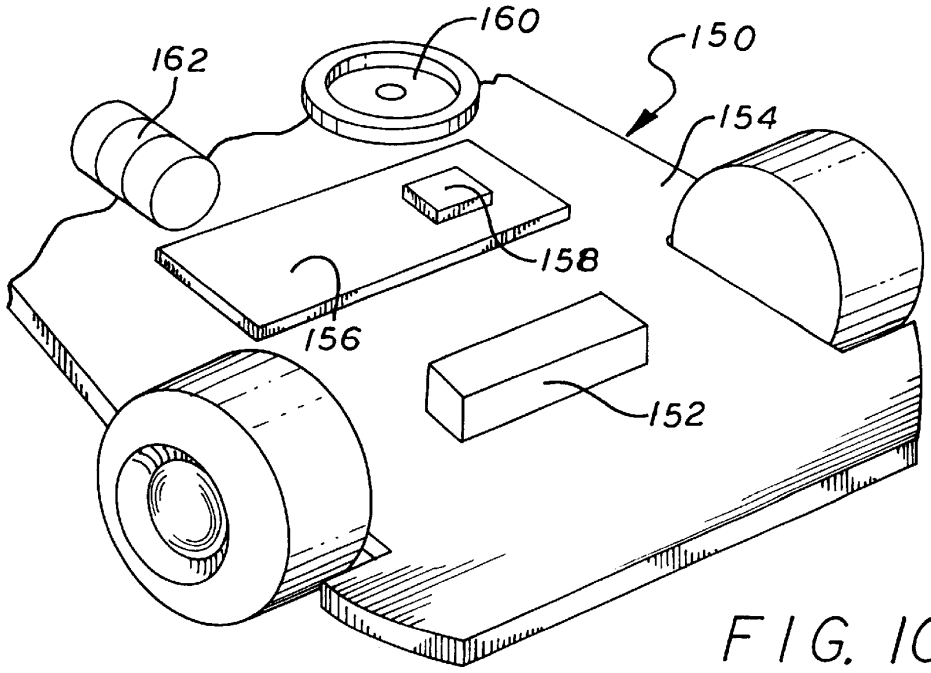
160
150
162
154
158
156
152

FIG. 10

TOY VEHICLES WITH INTEGRAL MOTION SENSITIVE GAME DISPLAY

CROSS REFERENCE TO RELATED APPLICATIONS

This application is a Continuation-in-Part of application Ser. No. 09/095,402, filed on June. 10, 1998, now pending.

BACKGROUND OF THE INVENTION

1. Field of the Invention

The present invention relates to a hand held electronic game with an interactive image display.

2. Background Information

There have been developed and marketed various electronic games which provide interactive three dimensional simulation. For example, there are games which provide a graphic image of a vehicle moving relative to a background image. A game participant may sit in a seat, such as on a motorcycle, that faces a relatively large screen which depicts related images including a graphic image of a motorcycle. The game may further have a handlebar and an accelerator throttle that can be manipulated by the player to vary the position of the graphic motorcycle image. Such games are relatively large and expensive to purchase. For this reason these products are typically limited to use within an arcade or other entertainment center.

There has been marketed a number of hand held electronic games with image display. For example, Tiger Games has marketed products under the trademarks TIGER MINI-BASEBALL and TIGER MINI-STOCK RACING which allows a player to move a dot relative to a graphic image such as a baseball diamond or a race track, respectively. The games may have buttons which allow the player to move the dot.

Radica Games has marketed a hand held electronic game under the name BASS FISHIN'. In general, a player will move the game through the air to simulate the casting of a fishing pole. The game contains a microprocessor, motion sensors, and a liquid crystal display (LCD) which can display data based on the actual casting motion of the game. BASS FISHIN' also contains a reel handle that can be rotated by the player to simulate the sensation of catching a fish. A simulated lake and fish are displayed by the LCD to provide visual assistance to the player, but these images are not altered in direct response to the actions of the player. The graphic image only changes after a "cast," or the rotation of the reel. There is not a continuous variation in the graphic image and movement of the hand held unit.

Mattel Toys has marketed a toy vehicle which has an LCD that displays messages such as "fill gas tank", "change tires". Schaper marketed a toy vehicle which contained a timer and an LCD that displayed the time the vehicle traveled across a playing surface.

None of the hand held electronic games of the prior art provide an interaction between a movement of the game unit and the image displayed by the game. It would be desirable to provide a hand held electronic game that continuously varies a graphic image as the entire game is being moved by a player, wherein the varying graphic image provides a simulated motion of the game.

SUMMARY OF THE INVENTION

One embodiment of the present invention is a hand held toy which includes a vehicle that can be moved by a player.

The vehicle may have a visual display which displays a graphic image. The video game may further have a sensor that senses the motion of a vehicle axle and a processor which varies the graphic image in response to the detected motion of the vehicle to simulate the motion of the vehicle.

BRIEF DESCRIPTION OF THE DRAWINGS

FIG. **1** is a top view of an embodiment of a hand held electronic toy of the present invention;

FIG. **2** is a top view of a visual display of the toy;

FIG. **3** is a top view of the visual display showing a different displayed image;

FIG. **4** is an exploded view of an embodiment of the toy;

FIG. **5** is a side view showing a sensor of the toy;

FIG. **6** is a schematic showing an electronic system of the toy;

FIG. **7** is a flowchart showing an operation of the toy;

FIG. **8** is an exploded view of another embodiment of the toy;

FIG. **9** is a perspective of another embodiment of the toy;

FIG. **10** is a perspective view of another embodiment of the toy.

DETAILED DESCRIPTION OF THE INVENTION

One embodiment of the present invention is a hand held toy which includes a vehicle that can be moved by a player. The vehicle may have a visual display which displays a graphic image such as an image of the vehicle or a background image as seen by a "driver" of the vehicle. The toy may further have a sensor that senses the movement of the vehicle and a processor which varies the graphic image to simulate the motion of the vehicle. The display, sensor and processor are all attached to the vehicle to create a hand held unit.

To operate the toy the processor may perform a software routine which causes the graphic image to move in response to movement of the vehicle. The player may move the vehicle and the corresponding vehicle image to successfully complete a game such as "racing" the vehicle around a track. The software routine may introduce variations in the background image such as another car or an obstacle in the track image. The player must then move the vehicle and the corresponding vehicle image to avoid the other car or obstacle.

Referring to the drawings more particularly by reference numbers, FIGS. **1** and **2** show an embodiment of a hand held toy **10** of the present invention. The hand held toy **10** may be constructed to simulated a toy vehicle **12** such as an automobile. Although a toy automobile is shown and described, it is to be understood that the toy vehicle can be constructed to simulate a boat, an airplane or any other apparatus.

The toy **10** may include a visual display **14** located on a top surface of the vehicle **12**. Locating the visual display **14** on the top surface allows a player to see the display even when the toy vehicle **12** is moving. The visual display **14** may depict a graphic image **16** of the toy vehicle **12** within a background image **18**. By way of example, the background image **18** may include a road image **20** and other vehicle images **22**.

Movement of the toy vehicle **12** may cause the vehicle graphic image **16** to move relative to the background image **18**. For example, if a player moves the toy vehicle **12** in a

forward direction the toy **10** may cause the vehicle image **16** to move in a forward direction relative to the background image **18**. A leftward movement of the toy vehicle **12** may cause the vehicle image **16** to move to the left within the background image **18**.

As shown in FIG. **3**, the toy **10** may vary the background image **18** so that the player must respond with a corresponding movement of the toy vehicle **12** and the vehicle image **16**. For example, the other vehicle images **22** may "crash" in front of the vehicle image **16**. The crash would require the player to move the toy vehicle **12** and corresponding image **16** to avert the other vehicle images **22**. The video game can thus vary the skill level of playing the game by changing the background image **18**.

FIG. **3**A shows an alternate embodiment wherein the visual display **14** does not display an image of the entire vehicle. The graphic image may include a front portion **12'** of a simulated vehicle as seen by a driver of the vehicle. The display **14** may also provide a background image **18** as seen by a driver of the vehicle. The background image **18** may change in correspondence with a movement of the vehicle by a player to simulate the motion of the vehicle.

FIG. **4** shows an embodiment of the toy vehicle **12**. The toy vehicle **12** may include a body **24** that is attached to a chassis **26**. The chassis **26** may have four wheels **28**. The visual display **14** may be located within an opening **30**. The visual display **14** may be a liquid crystal display (LCD) panel. The display **14** may be coupled to a printed circuit board assembly **32** and a battery(ies) **34**. The printed circuit board assembly **32** may also be connected to a speaker **36** and a pair of input buttons **38** and **40**. The circuit board assembly **32** may include electronic circuits which drive the visual display **14** and create sound through the speaker **36**.

The circuit board assembly **32** may also be coupled to a sensor **42** that senses a movement of the toy vehicle **12**. The sensor **42** may include an x motion detector **44** and a y motion detector **45** that are coupled to a ball **46**. The ball **46** may extend through an opening **48** in the chassis **26**. The ball **46** may be coupled to the chassis **26** by a retainer ring **49**. The detectors **44** and **45** provide electrical signals to the circuit board **32** which correspond to a movement of the ball **46**. The detectors **44** and **45** may each have a wheel **50** that rotates with the ball **46**.

As shown in FIG. **5**, movement of the toy vehicle **12** along a playing surface **51** rotates the ball **46** and spins one or both detector wheels **50**. Rotation of a detector wheel(s) **50** provides a corresponding input signal(s) to the printed circuit board assembly **32**. The circuit board assembly **32** then processes the input signal(s) to vary the position of the vehicle image displayed by the visual display. The circuit board assembly **32** may also process a time rate of change of the vehicle **12**, and then set or vary the simulated velocity or acceleration of the graphic image(s).

Referring to FIG. **4**, the input buttons **38** and **40** may be depressed to provide input signals to the circuit board assembly **32**. Input button **38** may be an "acceleration" button which causes the vehicle image to move, or move faster relative to the background image. Input button **40** may be a "brake" button which causes the vehicle image to slow down and/or stop relative to the background image.

FIG. **6** shows an electronic system for the toy **10**. The system may include a microprocessor **52** that is coupled to a memory device(s) **54**. The memory device **54** may be a read only memory (ROM) integrated circuit which contains software instructions for the microprocessor **52**. The microprocessor **52** may perform software routines in conjunction with the instructions stored in the memory device **54**.

The processor **52** may be coupled to the visual display **14**. The processor **52** may drive the display to depict the graphic images in accordance with the software routine(s). The processor **52** may also drive the speaker **36** through a digital to analog (D/A) converter **56**. The processor **52** may drive the speaker **36** to emit sounds such as the crashing of a vehicle. The processor **52**, memory and D/A **56** may be incorporated into the printed circuit board assembly.

The processor **52** may be connected to the sensor **42** and the input buttons **38** and **40**. The processor **52** may utilize input signals from the sensor **42** and/or buttons **38** and **40** to vary the relative position of the vehicle image relative to the background image.

FIG. **7** shows a routine performed by the processor **52**. The visual display is driven to display a vehicle image and a background image in step **60**. The process then determines whether there has been an input signal from the sensor **42**, or buttons **38** and **40** in decision block **62**. If no input signals are received the process returns to step **60** and continues to display the vehicle and background images.

If an input signal(s) is received the processor **52** computes a new position of the vehicle image relative to the background image in process block **64**. The process then returns to step **60** to provide the new image on the visual display. The processor **52** can compute a new relative position by varying the vehicle image, the background image, or both.

Referring to FIG. **2**, the video game may display data relating to the players performance of the game. For example, the game may display the "speed" of the vehicle image relative to the background image, along with the number of laps completed and an elapsed time. The game may have an input button (not shown) which allows the player to vary the skill level of the game. Varying the skill level may vary the software routine performed by the microprocessor **52**.

FIG. **8** shows another embodiment of the toy vehicle **12'** which has a pendulum based sensor **42'**. The sensor **42'** may include an electrically conductive pendulum **70** that can rotate into one of a plurality of electrical contacts **72**. The pendulum **70** and contacts **72** may be coupled to the circuit board assembly **32**. Movement of the pendulum **70** into a contact **72** may provide an input signal to the circuit board assembly **32** to vary the position of the vehicle image. Although an electrical pendulum **70** and contacts **72** are shown and described, it is to be understood that the contacts may be pressure sensors which provide input signals in response to pressure from the pendulum.

FIG. **9** shows another embodiment of a toy vehicle **100** which has a pair of axles **102** that are attached to a ball **104**. The ball **104** extends through an opening **106** of a vehicle housing **108**. The axles **102** may be captured by axle yokes **110** of the housing **108** and biased into aft positions by springs **112**.

The toy **100** may have a forward contact switch **114** and a rearward contact switch **116** that are located adjacent to the ball **104**. The toy **100** may also have a pair of lateral contact switches **118** that are coupled to collars **120** of each axle **102**.

The contact switches **114**, **116** and **118** are connected to a printed circuit board assembly **122** that may include a microprocessor **124**. The toy **100** may also include a speaker **126** and batteries **128** that are connected to the board assembly **122**.

When the toy **100** is moved across a playing surface the ball **104** and axles **102** may slightly move in a fore or aft direction as indicated by the arrows. Movement of the ball **104** may close one of the contact switches **114** or **116**. The

closed switch **114** or **116** provides an input signal to the microprocessor **124** to detect the motion of the toy **100**. Likewise a side to side movement of the toy **100** will induce a lateral shift of the axles **102** and cause one of the axle collars **120** to engage and close one of the contact switches **118**. The closed switch **118** provides an input signal to the microprocessor **124** to detect lateral movement of the toy **100**. Although a ball **104** is shown, it is to be understood that the axles **102** can be coupled to wheels **130** that roll along a playing surface.

FIG. **10** shows another embodiment of a toy **150** which has a mercury switch sensor **152** that can sense the motion of a vehicle housing **154**. The mercury switch sensor **152** can be connected to a printed circuit board assembly **156** which has a microprocessor **158**. The toy **150** may also have a speaker **160** and batteries **162**. In operation the mercury switch sensor **152** provides an input signal to the microprocessor **158** when the vehicle is moved either in the air or along a playing field.

Although a mercury switch sensor is disclosed it is to be understood that item **152** may be another sensing device such as an optical sensor.

The embodiments shown in FIGS. **9** and **10** contain the visual displays shown in FIGS. **1–3**A. These embodiments may also have other features shown in FIGS. **1–8** such as the input buttons.

While certain exemplary embodiments have been described and shown in the accompanying drawings, it is to be understood that such embodiments are merely illustrative of and not restrictive on the broad invention, and that this invention not be limited to the specific constructions and arrangements shown and described, since various other modifications may occur to those ordinarily skilled in the art.

What is claimed is:

1. A hand held toy, comprising:

a vehicle housing;

an axle that is coupled to said vehicle housing;

a visual display that is attached to said vehicle housing and which displays a graphic image;

a sensor that can sense a motion of said axle; and,

a processor that can vary a position of the graphic image in response to the detected motion of said axle.

2. The toy of claim **1**, further comprising a ball that is attached to said axle.

3. The toy of claim **1**, wherein said sensor includes a contact switch.

4. The toy of claim **2**, wherein said axle includes a collar that is coupled to said contact switch.

5. The toy of claim **1**, further comprising an input button that is coupled to said processor, said processor varies the graphic image displayed by said visual display when said input button is depressed.

6. The toy of claim **1**, further comprising a speaker that is coupled to said processor.

7. A hand held toy, comprising:

a vehicle housing;

an axle that is coupled to said vehicle housing;

a wheel that is attached to said axle;

a visual display that is attached to said vehicle housing and which displays a graphic image;

a sensor that can sense a motion of said vehicle housing; and,

a processor that can vary a position of the graphic image in response to the detected motion of said vehicle housing.

8. The toy of claim **7**, further comprising a ball that is attached to said axle.

9. The toy of claim **7**, wherein said sensor includes a contact switch.

10. The toy of claim **7**, wherein said axle includes a collar that is coupled to said contact switch.

11. The toy of claim **7**, further comprising an input button that is coupled to said processor, said processor varies the graphic image displayed by said visual display when said input button is depressed.

12. The toy of claim **7**, further comprising a speaker that is coupled to said processor.

* * * * *