PTO/SB/08a (01-10)
Approved for use through 07/31/2012. OMB 0651-0031
U.S. Patent and Trademark Office; U.S. DEPARTMENT OF COMMERCE
Under the Paperwork Reduction Act of 1995, no persons are required to respond to a collection of information unless it contains a valid OMB control number.

INFORMATION DISCLOSURE STATEMENT BY APPLICANT (**Not for submission under 37 CFR 1.99)**	Application Number	
	Filing Date	2015-08-31
	First Named Inventor	Hyun Lee
	Art Unit	
	Examiner Name	
	Attorney Docket Number	062453-036

U.S.PATENTS						Remove
Examiner Initial*	Cite No	Patent Number	Kind Code[1]	Issue Date	Name of Patentee or Applicant of cited Document	Pages,Columns,Lines where Relevant Passages or Relevant Figures Appear
	1	2043099		1936-02-02	Hanna	
	2	3562555		1971-02-09	Ahrons	
	3	3916390		1975-10-28	Chang et al.	
	4	4234920		1980-11-18	Van Ness et al.	
	5	4420821		1983-12-13	Hoffman	
	6	4449205		1984-05-15	Hoffman	
	7	4965828		1990-10-23	Ergott, Jr. et al.	
	8	5430742		1995-07-04	Jeddeloh et al.	

INFORMATION DISCLOSURE STATEMENT BY APPLICANT (Not for submission under 37 CFR 1.99)	Application Number	
	Filing Date	2015-08-31
	First Named Inventor	Hyun Lee
	Art Unit	
	Examiner Name	
	Attorney Docket Number	062453-036

	9	5519663		1996-05-21	Harper, Jr. et al.	
	10	5519831	A	1996-05-21	Holzhammer	
	11	5563839		1996-10-08	Herdt et al.	
	12	5577213		1996-11-19	Avery et al.	
	13	5619644		1997-04-08	Crockett et al.	
	14	5675725		1997-10-07	Malcolm	
	15	5870350		1999-02-09	Bertin et al.	
	16	5874995		1999-02-23	Naimpally et al.	
	17	5890192		1999-03-30	Lee et al.	
	18	5953215		1999-09-14	Karabatsos	
	19	6023421		2000-02-08	Clinton et al.	

INFORMATION DISCLOSURE STATEMENT BY APPLICANT (Not for submission under 37 CFR 1.99)	Application Number	
	Filing Date	2015-08-31
	First Named Inventor	Hyun Lee
	Art Unit	
	Examiner Name	
	Attorney Docket Number	062453-036

	20	6112310		2000-08-29	Jun et al.	
	21	6145068		2000-11-07	Lewis	
	22	6158015		2000-12-05	Klein	
	23	6199142	B1	2001-03-06	Saulsbury et al.	
	24	6216247	B1	2001-04-10	Creta et al.	
	25	6269382		2001-07-31	Cabrera et al.	
	26	6336174		2002-01-01	Li et al.	
	27	6336176		2002-01-01	Leyda et al.	
	28	6421279	B1	2002-07-16	Tobita et al.	
	29	6459647	B1	2002-10-01	Kengeri	
	30	6487623		2002-11-26	Emerson et al.	

INFORMATION DISCLOSURE STATEMENT BY APPLICANT (Not for submission under 37 CFR 1.99)	Application Number	
	Filing Date	2015-08-31
	First Named Inventor	Hyun Lee
	Art Unit	
	Examiner Name	
	Attorney Docket Number	062453-036

	31	6658507		2003-12-02	Chan	
	32	6691209		2004-02-10	O'Connell	
	33	6721860		2004-02-10	Klein	
	34	6769081	B1	2004-07-27	Parulkar	
	35	6799241	B2	2004-09-28	Kahn et al.	
	36	6799244		2004-09-28	Tanaka et al.	
	37	6816982		2004-11-09	Ravid	
	38	6487102	B1	2002-11-26	Halbert et al.	
	39	6944042	B2	2005-09-13	Komatsuzaki	
	40	6948029	B2	2005-09-20	Yano	
	41	6952368		2005-10-04	Miura et al.	

INFORMATION DISCLOSURE STATEMENT BY APPLICANT (Not for submission under 37 CFR 1.99)	Application Number	
	Filing Date	2015-08-31
	First Named Inventor	Hyun Lee
	Art Unit	
	Examiner Name	
	Attorney Docket Number	062453-036

	42	7053470	B1	2006-05-30	Sellers et al.	
	43	7062618	B2	2006-06-13	Tsunoda et al.	
	44	7089412	B2	2006-08-08	Chen	
	45	7102391	B1	2006-09-05	Sun et al.	
	46	7111142		2006-09-19	Spencer et al.	
	47	7155627	B2	2006-12-26	Matsui	
	48	7200021	B2	2007-04-03	Raghuram	
	49	7234099	B2	2007-06-19	Gower et al.	
	50	7353325		2008-04-01	Lofgren et al.	
	51	7409491	B2	2008-12-05	Doblar et al.	
	52	7409590		2008-08-05	Moshayedi et al.	

INFORMATION DISCLOSURE STATEMENT BY APPLICANT (Not for submission under 37 CFR 1.99)	Application Number	
	Filing Date	2015-08-31
	First Named Inventor	Hyun Lee
	Art Unit	
	Examiner Name	
	Attorney Docket Number	062453-036

	53	7411859	B2	2008-08-12	Sohn et al.	
	54	7421552	B2	2008-09-02	Long	
	55	7467251	B2	2008-12-16	Park et al.	
	56	7600142		1990-10-17	Groos	
	57	7716411	B2	2010-05-11	Panabaker et al.	
	58	7818488	B2	2010-10-19	Park et al.	
	59	8086955		2011-12-27	Zhou et al.	
	60	8102614		2012-01-24	Song et al.	
	61	8233303	B2	2012-07-31	Best et al.	
	62	8301833		2012-10-30	Chen et al.	
	63	8407395		2013-03-26	Kim et al.	

INFORMATION DISCLOSURE STATEMENT BY APPLICANT (Not for submission under 37 CFR 1.99)	Application Number	
	Filing Date	2015-08-31
	First Named Inventor	Hyun Lee
	Art Unit	
	Examiner Name	
	Attorney Docket Number	062453-036

	64	8412879		2013-04-02	Chang et al.	
	65	8516187		2013-08-20	Chen et al.	
	66	8671243		2014-03-11	Chen et al.	
	67	8677060		2014-03-18	Chen et al.	
	68	8874831	B2	2014-10-28	Lee et al.	
	69	8880791	B2	2014-11-04	Chen et al.	
	70	8904098	B2	2014-12-02	Amidi et al.	
	71	8904099	B2	2014-12-02	Chen et al.	

If you wish to add additional U.S. Patent citation information please click the Add button. Add

U.S.PATENT APPLICATION PUBLICATIONS Remove

Examiner Initial*	Cite No	Publication Number	Kind Code[1]	Publication Date	Name of Patentee or Applicant of cited Document	Pages,Columns,Lines where Relevant Passages or Relevant Figures Appear
	1	20020083368		2002-06-27	Abe et al.	

INFORMATION DISCLOSURE STATEMENT BY APPLICANT (Not for submission under 37 CFR 1.99)	Application Number	
	Filing Date	2015-08-31
	First Named Inventor	Hyun Lee
	Art Unit	
	Examiner Name	
	Attorney Docket Number	062453-036

	2	20020199061		2002-12-26	Friedman et al.	
	3	20030158995	A1	2003-08-21	Lee et al.	
	4	20040088508		2004-05-06	Ballard et al.	
	5	20040163027	A1	2004-08-19	MacLaren et al.	
	6	20040190210		2004-09-30	Leete	
	7	20050044302	A1	2005-02-25	Pauley et al.	
	8	20050060488	A1	2005-03-17	Poechmueller	
	9	20050132250	A1	2005-06-16	Hansen et al.	
	10	20050141273	A1	2005-06-30	Park et al.	
	11	20060039197	A1	2006-02-23	Khouri et al.	
	12	20060069896	A1	2006-03-30	Sanders	

INFORMATION DISCLOSURE STATEMENT BY APPLICANT (Not for submission under 37 CFR 1.99)	Application Number	
	Filing Date	2015-08-31
	First Named Inventor	Hyun Lee
	Art Unit	
	Examiner Name	
	Attorney Docket Number	062453-036

	13	20060080515	A1	2006-04-13	Spiers et al.	
	14	20060294295	A1	2006-12-28	Fukuzo	
	15	20070136523		2007-06-14	Bonella et al.	
	16	20070192627		2007-08-16	Oshikiri	
	17	20080104344		2008-05-01	Shimozono et al.	
	18	20080195806		2008-08-14	Cope	
	19	20090031099	A1	2009-01-29	Sartore	
	20	20100274953		2010-10-28	Lee et al.	
	21	20110320804		2011-12-29	Chan et al.	
	22	20120204079		2012-08-09	Takefman et al.	
	23	20120271990		2012-10-25	Chen et al.	

INFORMATION DISCLOSURE STATEMENT BY APPLICANT (Not for submission under 37 CFR 1.99)	Application Number	
	Filing Date	2015-08-31
	First Named Inventor	Hyun Lee
	Art Unit	
	Examiner Name	
	Attorney Docket Number	062453-036

	24	20130019076		2013-01-17	Amidi et al.	
	25	20130086309		2013-04-04	Lee et al.	
	26	20130254456		2013-09-26	Chen et al.	
	27	20130254497		2013-09-26	Chen et al.	
	28	20140059170		2014-02-27	Gasparakis et al.	
	29	20140156919	A1	2014-06-05	Chen et al.	
	30	20140156920	A1	2014-06-05	Chen et al.	

If you wish to add additional U.S. Published Application citation information please click the Add button. Add

FOREIGN PATENT DOCUMENTS Remove

Examiner Initial*	Cite No	Foreign Document Number[3]	Country Code[2] ¡	Kind Code[4]	Publication Date	Name of Patentee or Applicant of cited Document	Pages,Columns,Lines where Relevant Passages or Relevant Figures Appear	T[5]
	1	2013016723	WO	A3	2013-01-31	NETLIST INC.		☐
	2	2737383	EP	A2	2014-06-04	NETLIST INC.		☐

If you wish to add additional Foreign Patent Document citation information please click the Add button Add

EFS Web 2.1.17

INFORMATION DISCLOSURE STATEMENT BY APPLICANT (Not for submission under 37 CFR 1.99)	Application Number	
	Filing Date	2015-08-31
	First Named Inventor	Hyun Lee
	Art Unit	
	Examiner Name	
	Attorney Docket Number	062453-036

NON-PATENT LITERATURE DOCUMENTS			Remove
Examiner Initials*	Cite No	Include name of the author (in CAPITAL LETTERS), title of the article (when appropriate), title of the item (book, magazine, journal, serial, symposium, catalog, etc), date, pages(s), volume-issue number(s), publisher, city and/or country where published.	T5
	1	Office Action in U.S. Patent Application No. 12/240,916, mailed July 29, 2011.	☐
	2	Office Action in U.S. Patent Application No. 12/240,916, mailed February 1, 2012.	☐
	3	Advisory Action in U.S. Patent Application No. 12/240,916, mailed March 13, 2012.	☐
	4	Office Action in U.S. Patent Application No. 12/240,916, mailed April 3, 2012.	☐
	5	Office Action in U.S. Patent Application No. 13/536,173, mailed April 15, 2013.	☐
	6	Office Action in U.S. Patent Application No. 13/905,048, mailed August 1, 2013.	☐
	7	Notice of Allowance in U.S. Patent Application No. 13/559,476, mailed May 6, 2014.	☐
	8	International Search Report and Written Opinion in PCT/US12/48750, dated October 10, 2012.	☐
	9	International Preliminary Report on Patentability in PCT/US12/48750, mailed April 3, 2014.	☐

INFORMATION DISCLOSURE STATEMENT BY APPLICANT (Not for submission under 37 CFR 1.99)	Application Number	
	Filing Date	2015-08-31
	First Named Inventor	Hyun Lee
	Art Unit	
	Examiner Name	
	Attorney Docket Number	062453-036

	10	Office Action in U.S. Patent Application No. 13/625,563, mailed August 5, 2013.	☐
	11	Office Action in U.S. Patent Application No. 13/625,563, mailed May 9, 2014.	☐
	12	Office Action in U.S. Patent Application No. 13/905,053, mailed August 1, 2013.	☐
	13	Office Action in U.S. Patent Application No. 14/173,219, mailed March 13, 2014.	☐
	14	Office Action in U.S. Patent Application No. 14/173,242, mailed March 14, 2014.	☐
	15	JEDEC Standard 21–C, “Configurations for Solid State Memories,” pp. 4.5.5–1 to 4.5.5–18.	☐
	16	Diablo Technologies, Inc.'s Invalidity Contentions, Case No. 13-CV-05889 YGR, dated June 6, 2014.	☐
	17	Smart Storage Systems, Inc's Invalidity Contentions, Case No. 4:13-cv-05889-YGR, dated June 6, 2014.	☐
	18	JEDEC Standard, "Configurations for Solid State Memories", JEDEC Standard 21–C, Release 9, August 1999, 114 pages.	☐
	19	WONG, A. "The BIOS Optimization Guide", Adrian's Rojak Pot, Rev. 6.2, 1998-2001, 67 pages.	☐
	20	American National Standard Dictionary of Electrical and Electrical Terms, IEEE, Fourth Edition, Revised, ANS/IEEE Std 100-1988, Institute of Electrical Engineers, November 3, 1988, pp. 215, 722, 964 and 1103.	☐

INFORMATION DISCLOSURE STATEMENT BY APPLICANT (Not for submission under 37 CFR 1.99)	Application Number	
	Filing Date	2015-08-31
	First Named Inventor	Hyun Lee
	Art Unit	
	Examiner Name	
	Attorney Docket Number	062453-036

	21	Webster's II New College Dictionary, Houghton Mifflin Company, Boston, MA, 2001, pp. 259, 1115.	☐
	22	Bruce, J., "Synchronous DRAM Architectures, Organizations, and Alternate Technologies", Electrical and Computer Engineering Dept., Univ. of Maryland, December 10, 2002, 22 pages.	☐
	23	David, H. et al., "Fully Buffered DIMM (FB-DIMM) Design Considerations", Intel Developer Forum, Intel Corp., February 18, 2004, 36 pages.	☐
	24	Horowitz, P. et al., "The Art of Electronics", Cambridge University Press 2nd Ed. 1989, pp. 471, 495-496.	☐
	25	Innis, J., "MPC8560 PowerQUICC III Compact Flash Interface Design", Freescale Semiconductor, Inc., 2004-2006, pp. 1-23.	☐
	26	Jacob, B., "Memory Systems Cache, DRAM, Disk", Morgan Kaufman Publishers, Burlington, MA, 2008, Preface and Ch. 7 pp. 315-322.	☐
	27	Jandhyala, S. et al., "Design-For-Test Analysis of a Buffered SDRAM DIMM", Semiconductor Group, Texas Instruments, Proceedings of International Workshop in Memory Technology, Design and Testing, Singapore, August 13014, 1996, 15 pages.	☐
	28	JEDEC Standard, Double Data Rate (DDR): SDRAM Specification: JESD79C (Revision JESD79B), March 2003, pp. 1-75.	☐
	29	JEDEC Standard, FBDIMM Specification: DDR2 SDRAM Fully Buffered DIMM (FBDIMM) Design Specification: JESD205, JEDEC SOLID STATE TECH. ASSOC., March 2007, pp. 1-129.	☐
	30	Mutnuary, B. et al., "Analysis of Fully Buffered DIMM Interface in High-speed Server Applications", IBM Corp, xSeries eServer Development, 2006 Electronic Components and Technology Conference, pp. 203-208.	☐
	31	Petition for Inter Partes Review of U.S. Patent No. 8,516,187 (on behalf of SanDisk, Corp.), filed June 19, 2014.	☐

INFORMATION DISCLOSURE STATEMENT BY APPLICANT (Not for submission under 37 CFR 1.99)	Application Number	
	Filing Date	2015-08-31
	First Named Inventor	Hyun Lee
	Art Unit	
	Examiner Name	
	Attorney Docket Number	062453-036

	32	Petition for Inter Partes Review of U.S. Patent No. 8,301,833 (on behalf of SanDisk, Corp.), filed June 20, 2014.	☐
	33	"Using Two Chip Selects to Enable Quad Rank", an IP.com Prior Art Database Technical Disclosure, IP.com Electronic Publication: December 17, 2005, 2 pages.	☐
	34	Petition for Inter Partes Review of U.S. Patent No. 8,516,187 (on behalf of SMART Modular Technologies, Inc.), filed August 22, 2014.	☐
	35	Petition for Inter Partes Review of U.S. Patent No. 8,301,833 (on behalf of SMART Modular Technologies, Inc.), filed August 22, 2014.	☐
	36	"Out of Stealth Mode, Start-Up MetaRAM Unveils New Technology That Quadruples DRAM Capacity", Press Release edited by Storage Newsletter on February 28, 2008 at StorageNewsLetter.com, 8 pages.	☐
	37	"MetaRAM Develops New Technology That Quadruples Memory Capacity of Servers and Workstations; Reduces Price by Up to 90 Percent", Press Release provided by MetaRAM and published on MarketWired.com, February 25, 2008, 3 pages.	☐
	38	"240pin DDR2 MetaSDRAM Registered DIMM based on 1 GB version C", Hynix Semiconductor, Product Description Rev. 0.2, September 2008, 32 pages.	☐
	39	Notice of Allowance in U.S. Patent Application No. 14/489,269, mailed October 8, 2015.	☐

If you wish to add additional non-patent literature document citation information please click the Add button **Add**

EXAMINER SIGNATURE

Examiner Signature		Date Considered	

*EXAMINER: Initial if reference considered, whether or not citation is in conformance with MPEP 609. Draw line through a citation if not in conformance and not considered. Include copy of this form with next communication to applicant.

[1] See Kind Codes of USPTO Patent Documents at www.USPTO.GOV or MPEP 901.04. [2] Enter office that issued the document, by the two-letter code (WIPO Standard ST.3). [3] For Japanese patent documents, the indication of the year of the reign of the Emperor must precede the serial number of the patent document. [4] Kind of document by the appropriate symbols as indicated on the document under WIPO Standard ST.16 if possible. [5] Applicant is to place a check mark here if English language translation is attached.

INFORMATION DISCLOSURE STATEMENT BY APPLICANT (Not for submission under 37 CFR 1.99)	Application Number	
	Filing Date	2015-08-31
	First Named Inventor	Hyun Lee
	Art Unit	
	Examiner Name	
	Attorney Docket Number	062453-036

CERTIFICATION STATEMENT

Please see 37 CFR 1.97 and 1.98 to make the appropriate selection(s):

☐ That each item of information contained in the information disclosure statement was first cited in any communication from a foreign patent office in a counterpart foreign application not more than three months prior to the filing of the information disclosure statement. See 37 CFR 1.97(e)(1).

OR

☐ That no item of information contained in the information disclosure statement was cited in a communication from a foreign patent office in a counterpart foreign application, and, to the knowledge of the person signing the certification after making reasonable inquiry, no item of information contained in the information disclosure statement was known to any individual designated in 37 CFR 1.56(c) more than three months prior to the filing of the information disclosure statement. See 37 CFR 1.97(e)(2).

☐ See attached certification statement.

☐ The fee set forth in 37 CFR 1.17 (p) has been submitted herewith.

☒ A certification statement is not submitted herewith.

SIGNATURE

A signature of the applicant or representative is required in accordance with CFR 1.33, 10.18. Please see CFR 1.4(d) for the form of the signature.

Signature	/Khaled Shami/	Date (YYYY-MM-DD)	2015-08-31
Name/Print	Khaled Shami	Registration Number	38745

This collection of information is required by 37 CFR 1.97 and 1.98. The information is required to obtain or retain a benefit by the public which is to file (and by the USPTO to process) an application. Confidentiality is governed by 35 U.S.C. 122 and 37 CFR 1.14. This collection is estimated to take 1 hour to complete, including gathering, preparing and submitting the completed application form to the USPTO. Time will vary depending upon the individual case. Any comments on the amount of time you require to complete this form and/or suggestions for reducing this burden, should be sent to the Chief Information Officer, U.S. Patent and Trademark Office, U.S. Department of Commerce, P.O. Box 1450, Alexandria, VA 22313-1450. DO NOT SEND FEES OR COMPLETED FORMS TO THIS ADDRESS. **SEND TO: Commissioner for Patents, P.O. Box 1450, Alexandria, VA 22313-1450.**

Privacy Act Statement

The Privacy Act of 1974 (P.L. 93-579) requires that you be given certain information in connection with your submission of the attached form related to a patent application or patent. Accordingly, pursuant to the requirements of the Act, please be advised that: (1) the general authority for the collection of this information is 35 U.S.C. 2(b)(2); (2) furnishing of the information solicited is voluntary; and (3) the principal purpose for which the information is used by the U.S. Patent and Trademark Office is to process and/or examine your submission related to a patent application or patent. If you do not furnish the requested information, the U.S. Patent and Trademark Office may not be able to process and/or examine your submission, which may result in termination of proceedings or abandonment of the application or expiration of the patent.

The information provided by you in this form will be subject to the following routine uses:

1. The information on this form will be treated confidentially to the extent allowed under the Freedom of Information Act (5 U.S.C. 552) and the Privacy Act (5 U.S.C. 552a). Records from this system of records may be disclosed to the Department of Justice to determine whether the Freedom of Information Act requires disclosure of these record s.

2. A record from this system of records may be disclosed, as a routine use, in the course of presenting evidence to a court, magistrate, or administrative tribunal, including disclosures to opposing counsel in the course of settlement negotiations.

3. A record in this system of records may be disclosed, as a routine use, to a Member of Congress submitting a request involving an individual, to whom the record pertains, when the individual has requested assistance from the Member with respect to the subject matter of the record.

4. A record in this system of records may be disclosed, as a routine use, to a contractor of the Agency having need for the information in order to perform a contract. Recipients of information shall be required to comply with the requirements of the Privacy Act of 1974, as amended, pursuant to 5 U.S.C. 552a(m).

5. A record related to an International Application filed under the Patent Cooperation Treaty in this system of records may be disclosed, as a routine use, to the International Bureau of the World Intellectual Property Organization, pursuant to the Patent Cooperation Treaty.

6. A record in this system of records may be disclosed, as a routine use, to another federal agency for purposes of National Security review (35 U.S.C. 181) and for review pursuant to the Atomic Energy Act (42 U.S.C. 218(c)).

7. A record from this system of records may be disclosed, as a routine use, to the Administrator, General Services, or his/her designee, during an inspection of records conducted by GSA as part of that agency's responsibility to recommend improvements in records management practices and programs, under authority of 44 U.S.C. 2904 and 2906. Such disclosure shall be made in accordance with the GSA regulations governing inspection of records for this purpose, and any other relevant (i.e., GSA or Commerce) directive. Such disclosure shall not be used to make determinations about individuals.

8. A record from this system of records may be disclosed, as a routine use, to the public after either publication of the application pursuant to 35 U.S.C. 122(b) or issuance of a patent pursuant to 35 U.S.C. 151. Further, a record may be disclosed, subject to the limitations of 37 CFR 1.14, as a routine use, to the public if the record was filed in an application which became abandoned or in which the proceedings were terminated and which application is referenced by either a published application, an application open to public inspections or an issued patent.

9. A record from this system of records may be disclosed, as a routine use, to a Federal, State, or local law enforcement agency, if the USPTO becomes aware of a violation or potential violation of law or regulation.

PTO/AIA/14 (07-14)
Approved for use through 04/30/2017. OMB 0651-0032
U.S. Patent and Trademark Office; U.S. DEPARTMENT OF COMMERCE
Under the Paperwork Reduction Act of 1995, no persons are required to respond to a collection of information unless it contains a valid OMB control number.

Application Data Sheet 37 CFR 1.76	Attorney Docket Number	062453-036
	Application Number	
Title of Invention	FLASH-DRAM HYBRID MEMORY MODULE	

The application data sheet is part of the provisional or nonprovisional application for which it is being submitted. The following form contains the bibliographic data arranged in a format specified by the United States Patent and Trademark Office as outlined in 37 CFR 1.76.
This document may be completed electronically and submitted to the Office in electronic format using the Electronic Filing System (EFS) or the document may be printed and included in a paper filed application.

Secrecy Order 37 CFR 5.2

☐ Portions or all of the application associated with this Application Data Sheet may fall under a Secrecy Order pursuant to 37 CFR 5.2 (Paper filers only. Applications that fall under Secrecy Order may not be filed electronically.)

Inventor Information:

Inventor 1 Remove

Legal Name

Prefix	Given Name	Middle Name	Family Name	Suffix
	Hyun		Lee	

Residence Information (Select One) ◉ US Residency ◯ Non US Residency ◯ Active US Military Service

City	Ladera Ranch	State/Province	CA	Country of Residence i	US

Mailing Address of Inventor:

Address 1	21 Thalia Street		
Address 2			
City	Ladera Ranch	State/Province	CA
Postal Code	92694	Country i	US

Inventor 2 Remove

Legal Name

Prefix	Given Name	Middle Name	Family Name	Suffix
	Chi-She		Chen	

Residence Information (Select One) ◉ US Residency ◯ Non US Residency ◯ Active US Military Service

City	Walnut	State/Province	CA	Country of Residence i	US

Mailing Address of Inventor:

Address 1	944 Crystal Water Lane		
Address 2			
City	Walnut	State/Province	CA
Postal Code	91789	Country i	US

Inventor 3 Remove

Legal Name

Prefix	Given Name	Middle Name	Family Name	Suffix
	Jeffrey	C.	Solomon	

Residence Information (Select One) ◉ US Residency ◯ Non US Residency ◯ Active US Military Service

Under the Paperwork Reduction Act of 1995, no persons are required to respond to a collection of information unless it contains a valid OMB control number.

Application Data Sheet 37 CFR 1.76	Attorney Docket Number	062453-036
	Application Number	
Title of Invention	FLASH-DRAM HYBRID MEMORY MODULE	

City	Irvine	State/Province	CA	Country of Residence i	US

Mailing Address of Inventor:

Address 1	6 Silver Fir		
Address 2			
City	Irvine	State/Province	CA
Postal Code	92604	Country i	US

Inventor 4 Remove

Legal Name

Prefix	Given Name	Middle Name	Family Name	Suffix
	Scott	H.	Milton	

Residence Information (Select One) (•) US Residency ( ) Non US Residency ( ) Active US Military Service

City	Irvine	State/Province	CA	Country of Residence i	US

Mailing Address of Inventor:

Address 1	49 Statehouse Place		
Address 2			
City	Irvine	State/Province	CA
Postal Code	92602	Country i	US

Inventor 5 Remove

Legal Name

Prefix	Given Name	Middle Name	Family Name	Suffix
	Jayesh		Bhakta	

Residence Information (Select One) (•) US Residency ( ) Non US Residency ( ) Active US Military Service

City	Cerritos	State/Province	CA	Country of Residence i	US

Mailing Address of Inventor:

Address 1	12220 Rose Street		
Address 2			
City	Cerritos	State/Province	CA
Postal Code	90703	Country i	US

All Inventors Must Be Listed - Additional Inventor Information blocks may be generated within this form by selecting the **Add** button. Add

Correspondence Information:

Enter either Customer Number or complete the Correspondence Information section below.
For further information see 37 CFR 1.33(a).

☐ **An Address is being provided for the correspondence Information of this application.**

PTO/AIA/14 (07-14)
Approved for use through 04/30/2017. OMB 0651-0032
U.S. Patent and Trademark Office; U.S. DEPARTMENT OF COMMERCE
Under the Paperwork Reduction Act of 1995, no persons are required to respond to a collection of information unless it contains a valid OMB control number.

Application Data Sheet 37 CFR 1.76	Attorney Docket Number	062453-036
	Application Number	
Title of Invention	FLASH-DRAM HYBRID MEMORY MODULE	

Customer Number	22204		
Email Address		Add Email	Remove Email

Application Information:

Title of the Invention	FLASH-DRAM HYBRID MEMORY MODULE		
Attorney Docket Number	062453-036	**Small Entity Status Claimed**	☒
Application Type	Nonprovisional		
Subject Matter	Utility		
Total Number of Drawing Sheets (if any)	10	**Suggested Figure for Publication (if any)**	

Filing By Reference :

Only complete this section when filing an application by reference under 35 U.S.C. 111(c) and 37 CFR 1.57(a). Do not complete this section if application papers including a specification and any drawings are being filed. Any domestic benefit or foreign priority information must be provided in the appropriate section(s) below (i.e., "Domestic Benefit/National Stage Information" and "Foreign Priority Information").

For the purposes of a filing date under 37 CFR 1.53(b), the description and any drawings of the present application are replaced by this reference to the previously filed application, subject to conditions and requirements of 37 CFR 1.57(a).

Application number of the previously filed application	Filing date (YYYY-MM-DD)	Intellectual Property Authority or Country

Publication Information:

☐ Request Early Publication (Fee required at time of Request 37 CFR 1.219)

☐ **Request Not to Publish.** I hereby request that the attached application not be published under 35 U.S.C. 122(b) and certify that the invention disclosed in the attached application **has not and will not** be the subject of an application filed in another country, or under a multilateral international agreement, that requires publication at eighteen months after filing.

Representative Information:

Representative information should be provided for all practitioners having a power of attorney in the application. Providing this information in the Application Data Sheet does not constitute a power of attorney in the application (see 37 CFR 1.32).
Either enter Customer Number or complete the Representative Name section below. If both sections are completed the customer Number will be used for the Representative Information during processing.

Please Select One:	◉ Customer Number	◯ US Patent Practitioner	◯ Limited Recognition (37 CFR 11.9)
Customer Number	22204		

Under the Paperwork Reduction Act of 1995, no persons are required to respond to a collection of information unless it contains a valid OMB control number.

Application Data Sheet 37 CFR 1.76	Attorney Docket Number	062453-036
	Application Number	
Title of Invention	FLASH-DRAM HYBRID MEMORY MODULE	

Domestic Benefit/National Stage Information:

This section allows for the applicant to either claim benefit under 35 U.S.C. 119(e), 120, 121, 365(c), or 386(c) or indicate National Stage entry from a PCT application. Providing this information in the application data sheet constitutes the specific reference required by 35 U.S.C. 119(e) or 120, and 37 CFR 1.78.
When referring to the current application, please leave the application number blank.

Prior Application Status	Pending				Remove
Application Number	Continuity Type	Prior Application Number	Filing Date (YYYY-MM-DD)		
	Continuation of	14/489269	2014-09-17		
Prior Application Status	Patented				Remove
Application Number	Continuity Type	Prior Application Number	Filing Date (YYYY-MM-DD)	Patent Number	Issue Date (YYYY-MM-DD)
14/489269	Continuation of	13/559476	2012-07-26	8874831	2014-10-28
Prior Application Status	Expired				Remove
Application Number	Continuity Type	Prior Application Number	Filing Date (YYYY-MM-DD)		
13/559476	Claims benefit of provisional	61512871	2011-07-28		
Prior Application Status	Patented				Remove
Application Number	Continuity Type	Prior Application Number	Filing Date (YYYY-MM-DD)	Patent Number	Issue Date (YYYY-MM-DD)
13/559476	Continuation in part of	12240916	2008-09-29	8301833	2012-10-30
Prior Application Status	Abandoned				Remove
Application Number	Continuity Type	Prior Application Number	Filing Date (YYYY-MM-DD)		
12240916	Continuation of	12131873	2008-06-02		
Prior Application Status	Expired				Remove
Application Number	Continuity Type	Prior Application Number	Filing Date (YYYY-MM-DD)		
12131873	Claims benefit of provisional	60941586	2007-06-01		

Additional Domestic Benefit/National Stage Data may be generated within this form by selecting the **Add** button. Add

Foreign Priority Information:

This section allows for the applicant to claim priority to a foreign application. Providing this information in the application data sheet constitutes the claim for priority as required by 35 U.S.C. 119(b) and 37 CFR 1.55. When priority is claimed to a foreign application that is eligible for retrieval under the priority document exchange program (PDX) [i] the information will be used by the Office to automatically attempt retrieval pursuant to 37 CFR 1.55(i)(1) and (2). Under the PDX program, applicant bears the ultimate responsibility for ensuring that a copy of the foreign application is received by the Office from the participating foreign intellectual property office, or a certified copy of the foreign priority application is filed, within the time period specified in 37 CFR 1.55(g)(1).

Remove

Application Number	Country [i]	Filing Date (YYYY-MM-DD)	Access Code [i] (if applicable)

Under the Paperwork Reduction Act of 1995, no persons are required to respond to a collection of information unless it contains a valid OMB control number.

Application Data Sheet 37 CFR 1.76	Attorney Docket Number	062453-036
	Application Number	
Title of Invention	FLASH-DRAM HYBRID MEMORY MODULE	

Additional Foreign Priority Data may be generated within this form by selecting the **Add** button. Add

Statement under 37 CFR 1.55 or 1.78 for AIA (First Inventor to File) Transition Applications

☐ This application (1) claims priority to or the benefit of an application filed before March 16, 2013 and (2) also contains, or contained at any time, a claim to a claimed invention that has an effective filing date on or after March 16, 2013.
NOTE: By providing this statement under 37 CFR 1.55 or 1.78, this application, with a filing date on or after March 16, 2013, will be examined under the first inventor to file provisions of the AIA.

Authorization to Permit Access:

☒ Authorization to Permit Access to the Instant Application by the Participating Offices

If checked, the undersigned hereby grants the USPTO authority to provide the European Patent Office (EPO), the Japan Patent Office (JPO), the Korean Intellectual Property Office (KIPO), the World Intellectual Property Office (WIPO), and any other intellectual property offices in which a foreign application claiming priority to the instant patent application is filed access to the instant patent application. See 37 CFR 1.14(c) and (h). This box should not be checked if the applicant does not wish the EPO, JPO, KIPO, WIPO, or other intellectual property office in which a foreign application claiming priority to the instant patent application is filed to have access to the instant patent application.

In accordance with 37 CFR 1.14(h)(3), access will be provided to a copy of the instant patent application with respect to: 1) the instant patent application-as-filed; 2) any foreign application to which the instant patent application claims priority under 35 U.S.C. 119(a)-(d) if a copy of the foreign application that satisfies the certified copy requirement of 37 CFR 1.55 has been filed in the instant patent application; and 3) any U.S. application-as-filed from which benefit is sought in the instant patent application.

In accordance with 37 CFR 1.14(c), access may be provided to information concerning the date o f filing this Authorization.

Applicant Information:

Providing assignment information in this section does not substitute for compliance with any requirement of part 3 of Title 37 of CFR to have an assignment recorded by the Office.

Under the Paperwork Reduction Act of 1995, no persons are required to respond to a collection of information unless it contains a valid OMB control number.

Application Data Sheet 37 CFR 1.76	Attorney Docket Number	062453-036
	Application Number	
Title of Invention	FLASH-DRAM HYBRID MEMORY MODULE	

Applicant 1 Remove

If the applicant is the inventor (or the remaining joint inventor or inventors under 37 CFR 1.45), this section should not be completed. The information to be provided in this section is the name and address of the legal representative who is the applicant under 37 CFR 1.43; or the name and address of the assignee, person to whom the inventor is under an obligation to assign the invention, or person who otherwise shows sufficient proprietary interest in the matter who is the applicant under 37 CFR 1.46. If the applicant is an applicant under 37 CFR 1.46 (assignee, person to whom the inventor is obligated to assign, or person who otherwise shows sufficient proprietary interest) together with one or more joint inventors, then the joint inventor or inventors who are also the applicant should be identified in this section.

Clear

- (●) Assignee
- ( ) Legal Representative under 35 U.S.C. 117
- ( ) Joint Inventor
- ( ) Person to whom the inventor is obligated to assign.
- ( ) Person who shows sufficient proprietary interest

If applicant is the legal representative, indicate the authority to file the patent application, the inventor is:

Name of the Deceased or Legally Incapacitated Inventor :

If the Applicant is an Organization check here. [X]

Organization Name	Netlist, Inc.		
Mailing Address Information For Applicant:			
Address 1	175 Technology Drive		
Address 2	Suite 150		
City	Irvine	**State/Province**	CA
Country i	US	Postal Code	92618
Phone Number		Fax Number	
Email Address			

Additional Applicant Data may be generated within this form by selecting the Add button. Add

Assignee Information including Non-Applicant Assignee Information:

Providing assignment information in this section does not subsitute for compliance with any requirement of part 3 of Title 37 of CFR to have an assignment recorded by the Office.

Assignee 1

Complete this section if assignee information, including non-applicant assignee information, is desired to be included on the patent application publication . An assignee-applicant identified in the "Applicant Information" section will appear on the patent application publication as an applicant. For an assignee-applicant, complete this section only if identification as an assignee is also desired on the patent application publication.

Remove

If the Assignee or Non-Applicant Assignee is an Organization check here. [ ]

Under the Paperwork Reduction Act of 1995, no persons are required to respond to a collection of information unless it contains a valid OMB control number.

Application Data Sheet 37 CFR 1.76	Attorney Docket Number	062453-036
	Application Number	
Title of Invention	FLASH-DRAM HYBRID MEMORY MODULE	

Prefix	**Given Name**	Middle Name	**Family Name**	Suffix

Mailing Address Information For Assignee including Non-Applicant Assignee:

Address 1			
Address 2			
City		**State/Province**	
Country i		Postal Code	
Phone Number		Fax Number	
Email Address			

Additional Assignee or Non-Applicant Assignee Data may be generated within this form by selecting the Add button. Add

Signature:

Remove

NOTE: This form must be signed in accordance with 37 CFR 1.33. See 37 CFR 1.4 for signature requirements and certifications.

Signature	/Khaled Shami/			Date (YYYY-MM-DD)	2015-08-31
First Name	Khaled	Last Name	Shami	Registration Number	38745

Additional Signature may be generated within this form by selecting the Add button. Add

This collection of information is required by 37 CFR 1.76. The information is required to obtain or retain a benefit by the public which is to file (and by the USPTO to process) an application. Confidentiality is governed by 35 U.S.C. 122 and 37 CFR 1.14. This collection is estimated to take 23 minutes to complete, including gathering, preparing, and submitting the completed application data sheet form to the USPTO. Time will vary depending upon the individual case. Any comments on the amount of time you require to complete this form and/or suggestions for reducing this burden, should be sent to the Chief Information Officer, U.S. Patent and Trademark Office, U.S. Department of Commerce, P.O. Box 1450, Alexandria, VA 22313-1450. DO NOT SEND FEES OR COMPLETED FORMS TO THIS ADDRESS. **SEND TO: Commissioner for Patents, P.O. Box 1450, Alexandria, VA 22313-1450.**

Privacy Act Statement

The Privacy Act of 1974 (P.L. 93-579) requires that you be given certain information in connection with your submission of the attached form related to a patent application or patent. Accordingly, pursuant to the requirements of the Act, please be advised that: (1) the general authority for the collection of this information is 35 U.S.C. 2(b)(2); (2) furnishing of the information solicited is voluntary; and (3) the principal purpose for which the information is used by the U.S. Patent and Trademark Office is to process and/or examine your submission related to a patent application or patent. If you do not furnish the requested information, the U.S. Patent and Trademark Office may not be able to process and/or examine your submission, which may result in termination of proceedings or abandonment of the application or expiration of the patent.

The information provided by you in this form will be subject to the following routine uses:

1. The information on this form will be treated confidentially to the extent allowed under the Freedom of Information Act (5 U.S.C. 552) and the Privacy Act (5 U.S.C. 552a). Records from this system of records may be disclosed to the Department of Justice to determine whether the Freedom of Information Act requires disclosure of these records.

2. A record from this system of records may be disclosed, as a routine use, in the course of presenting evidence to a court, magistrate, or administrative tribunal, including disclosures to opposing counsel in the course of settlement negotiations.

3. A record in this system of records may be disclosed, as a routine use, to a Member of Congress submitting a request involving an individual, to whom the record pertains, when the individual has requested assistance from the Member with respect to the subject matter of the record.

4. A record in this system of records may be disclosed, as a routine use, to a contractor of the Agency having need for the information in order to perform a contract. Recipients of information shall be required to comply with the requirements of the Privacy Act of 1974, as amended, pursuant to 5 U.S.C. 552a(m).

5. A record related to an International Application filed under the Patent Cooperation Treaty in this system of records may be disclosed, as a routine use, to the International Bureau of the World Intellectual Property Organization, pursuant to the Patent C o o p eration Treaty.

6. A record in this system of records may be disclosed, as a routine use, to another federal agency for purposes of National Security review (35 U.S.C. 181) and for review pursuant to the Atomic Energy Act (42 U.S.C. 218(c)).

7. A record from this system of records may be disclosed, as a routine use, to the Administrator, General Services, or his/her designee, during an inspection of records conducted by GSA as part of that agency's responsibility to recommend improvements in records management practices and programs, under authority of 44 U.S.C. 2904 and 2906. Such disclosure shall be made in accordance with the GSA regulations governing inspection of records for this purpose, and any other relevant (i.e., GSA or Commerce) directive. Such disclosure shall not be used to make determinations about individuals.

8. A record from this system of records may be disclosed, as a routine use, to the public after either publication of the application pursuant to 35 U.S.C. 122(b) or issuance of a patent pursuant to 35 U.S.C. 151. Further, a record may be disclosed, subject to the limitations of 37 CFR 1.14, as a routine use, to the public if the record was filed in an application which became abandoned or in which the proceedings were terminated and which application is referenced by either a published application, an application open to public inspections or an issued patent.

9. A record from this system of records may be disclosed, as a routine use, to a Federal, State, or local law enforcement agency, if the USPTO becomes aware of a violation or potential violation of law or regulation.

FLASH-DRAM HYBRID MEMORY MODULE

PRIORITY CLAIM

[0001] This application is a continuation of U.S. Patent Application No. 14/489,269, filed September 17, 2014, titled, "FLASH-DRAM HYBRID MEMORY MODULE", which is a continuation of U.S. Patent No. 8,874,831, issued, October 28, 2014, titled , "FLASH-DRAM HYBRID MEMORY MODULE", which claims the benefit of provisional patent application serial no. 61/512,871, filed July 28, 2011, and is a continuation-in-part of US Patent No. 8,301,833, issued October 30, 2012, which is a continuation of U.S. patent application serial no. 12/131,873, filed June 2, 2008, which claims the benefit of U.S. provisional patent application serial no. 60/941,586, filed June 1, 2007, the contents of all of which are incorporated herein by reference in their entirety.

[0002] This application may also be considered to be related to co-pending U.S. patent application serial no. 13/536,173, filed on June 28, 2012, and commonly owned herewith.

TECHNICAL FIELD

[0003] The present disclosure relates generally to computer memory devices, and more particularly, to devices that employ different types of memory devices such as combinations of Flash and random access memories.

Samsung Electronics Co., Ltd.
Ex. 1011, p. 25

BACKGROUND

[0004] As technology advances and the usage of portable computing devices, such as tablet notebook computers, increases, more data needs to be transferred among data centers and to/from end users. In many cases, data centers are built by clustering multiple servers that are networked to increase performance.

[0005] Although there are many types of networked servers that are specific to the types applications envisioned, the basic concept is generally to increase server performance by dynamically allocating computing and storage resources. In recent years, server technology has evolved to be specific to particular applications such as 'finance transactions' (for example, point-of-service, inter-bank transaction, stock market transaction), 'scientific computation' (for example, fluid dynamic for automobile and ship design, weather prediction, oil and gas expeditions), 'medical diagnostics' (for example, diagnostics based on the fuzzy logic, medical data processing), 'simple information sharing and searching' (for example, web search, retail store website, company home page), 'email' (information distribution and archive), 'security service', 'entertainment' (for example, video-on-demand), and so on. However, all of these applications suffer from the same information transfer bottleneck due to the inability of a high speed CPU (central processing unit) to efficiently transfer data in and out of relatively slower speed storage or memory subsystems, particularly since data transfers typically pass through the CPU input/output (I/O) channels.

[0006] The data transfer limitations by the CPU are exemplified by the arrangement shown in FIG. 1, and apply to data transfers between main storage (for example the hard disk (HD) or

Samsung Electronics Co., Ltd.
Ex. 1011, p. 26

solid state drive (SSD) and the memory subsystems (for example DRAM DIMM (Dynamic Random Access Memory Dual In-line Memory Module) connected to the front side bus (FSB)). In arrangements such as that of FIG. 1, the SSD/HD and DRAM DIMM of a conventional memory arrangement are connected to the CPU via separate memory control ports (not shown). FIG. 1 specifically shows, through the double-headed arrow, the data flow path between the computer or server main storage (SSD/HD) to the DRAM DIMMs. Since the SSD/HD data I/O and the DRAM DIMM data I/O are controlled by the CPU, the CPU needs to allocate its process cycles to control these I/Os, which may include the IRQ (Interrupt Request) service which the CPU performs periodically. As will be appreciated, the more time a CPU allocates to controlling the data transfer traffic, the less time the CPU has to perform other tasks. Therefore, the overall performance of a server will deteriorate with the increased amount of time the CPU has to expend in performing data transfer.

[0007] There have been various approaches to increase the data transfer throughput rates from/to the main storage, such as SSD/HD, to local storage, such as DRAM DIMM. In one example as illustrated in FIG. 2, EcoRAM™ developed by Spansion provides a storage SSD based system that assumes a physical form factor of a DIMM . The EcoRAM™ is populated with Flash memories and a relatively small memory capacity using DRAMs which serve as a data buffer. This arrangement is capable of delivering higher throughput rate than a standard SSD based system since the EcoRAM™ is connected to the CPU (central processing unit) via a high speed interface, such as the HT (Hyper Transport) interface, while an SSD/HD is typically connected via SATA (serial AT attachment), USB (universal serial bus), or PCI Express (peripheral component interface express). For example, the read random access throughput rate of EcoRAM™ is near 3GB/s compared with 400MB/s for a NAND SSD memory subsystem

Samsung Electronics Co., Ltd.
Ex. 1011, p. 27

using the standard PCI Express-based. This is a 7.5X performance improvement. However, the performance improvement for write random access throughput rate is less than 2X (197MBs for the EcoRAM vs. 104MBs for NAND SSD). This is mainly due to the fact that the write speed is cannot be faster than the NAND Flash write access time. Figure 2 is an example of EcoRAM™ using SSD with the form factor of a standard DIMM such that it can be connected to the FSB (front side bus). However, due to the interface protocol difference between DRAM and Flash, an interface device, EcoRAM Accelerator™), which occupies one of the server's CPU sockets is used, and hence further reducing server's performance by reducing the number of available CPU sockets available, and in turn reducing the overall computation efficiency. The server's performance will further suffer due to the limited utilization of the CPU bus due to the large difference in the data transfer throughput rate between read and write operations.

[0008] The EcoRAM™ architecture enables the CPU to view the Flash DIMM controller chip as another processor with a large size of memory available for CPU access.

[0009] In general, the access speed of a Flash based system is limited by four items: the read/write speed of the Flash memory, the CPU's FSB bus speed and efficiency, the Flash DIMM controller's inherent latency, and the HT interconnect speed and efficiency which is dependent on the HT interface controller in the CPU and Flash DIMM controller chip.

[0010] The published results indicate that these shortcomings are evident in that the maximum throughput rate is 1.56 GBs for the read operation and 104 MBs for the write operation. These access rates are 25% of the DRAM read access speed, and 1.7% of the DRAM access speed at 400MHz operation. The disparity in the access speed (15 to 1) between the read

Samsung Electronics Co., Ltd.
Ex. 1011, p. 28

operation and write operation highlight a major disadvantage of this architecture. The discrepancy of the access speed between this type of architecture and JEDEC standard DRAM DIMM is expected to grow wider as the DRAM memory technology advances much faster than the Flash memory.

OVERVIEW

[0011] Described herein is a memory module couplable to a memory controller of a host system. The memory module includes a non-volatile memory subsystem, a data manager coupled to the non-volatile memory subsystem, a volatile memory subsystem coupled to the data manager and operable to exchange data with the non-volatile memory subsystem by way of the data manager, and a controller operable to receive commands from the memory controller and to direct (i) operation of the non-volatile memory subsystem, (ii) operation of the volatile memory subsystem, and (iii) transfer of data between any two or more of the memory controller, the volatile memory subsystem, and the non-volatile memory subsystem based on at least one received command from the memory controller.

[0012] Also described herein is a method for managing a memory module by a memory controller, the memory module including volatile and non-volatile memory subsystems. The method includes receiving control information from the memory controller, wherein the control information is received using a protocol of the volatile memory subsystem. The method further includes identifying a data path to be used for transferring data to or from the memory module using the received control information, and using a data manager and a controller of the memory module to transfer data between any two or more of the memory controller, the volatile memory

Samsung Electronics Co., Ltd.
Ex. 1011, p. 29

subsystem, and the non-volatile memory subsystem based on at least one of the received control information and the identified data path.

[0013] Also described herein is a memory module wherein the data manager is operable to control one or more of data flow rate, data transfer size, data buffer size, data error monitoring, and data error correction in response to receiving at least one of a control signal and control information from the controller.

[0014] Also described herein is a memory module wherein the data manager controls data traffic between any two or more of the memory controller, the volatile memory subsystem, and the non-volatile memory subsystem based on instructions received from the controller.

[0015] Also described herein is a memory module wherein data traffic control relates to any one or more of data flow rate, data transfer size, data buffer size, data transfer bit width, formatting information, direction of data flow, and the starting time of data transfer.

[0016] Also described herein is a memory module wherein the controller configures at least one of a first memory address space of the volatile memory subsystem and a second memory address space of the non-volatile memory subsystem in response to at least one of a received command from the memory controller and memory address space initialization information of the memory module.

Samsung Electronics Co., Ltd.
Ex. 1011, p. 30

[0017] Also described herein is a memory module wherein the data manager is configured as a bi-directional data transfer fabric having two or more sets of data ports coupled to any one of the volatile and non-volatile memory subsystems.

[0018] Also described herein is a memory module wherein at least one of the volatile and non-volatile memory subsystems comprises one or more memory segments.

[0019] Also described herein is a memory module wherein each memory segment comprises at least one memory circuit, memory device, or memory die.

[0020] Also described herein is a memory module wherein the volatile memory subsystem comprises DRAM memory.

[0021] Also described herein is a memory module wherein the non-volatile memory subsystem comprises flash memory.

[0022] Also described herein is a memory module wherein at least one set of data ports is operated by the data manager to independently and/or concurrently transfer data to or from one or more memory segments of the volatile or non-volatile memory subsystems.

[0023] Also described herein is a memory module wherein the data manager and controller are configured to effect data transfer between the memory controller and the non-volatile memory subsystem in response to memory access commands received by the controller from the memory controller.

Samsung Electronics Co., Ltd.
Ex. 1011, p. 31

[0024] Also described herein is a memory module wherein the volatile memory subsystem is operable as a buffer for the data transfer between the memory controller and non-volatile memory.

[0025] Also described herein is a memory module wherein the data manager further includes a data format module configured to format data to be transferred between any two or more of the memory controller, the volatile memory subsystem, and the non-volatile memory subsystem based on control information received from the controller.

[0026] Also described herein is a memory module wherein the data manager further includes a data buffer for buffering data delivered to or from the non-volatile memory subsystem.

[0027] Also described herein is a memory module wherein the controller is operable to perform one or more of memory address translation, memory address mapping, address domain conversion, memory access control, data error correction, and data width modulation between the volatile and non-volatile memory subsystems.

[0028] Also described herein is a memory module wherein the controller is configured to effect operation with the host system in accordance with a prescribed protocol.

[0029] Also described herein is a memory module wherein the prescribed protocol is selected from one or more of DDR, DDR2, DDR3, and DDR4 protocols.

Samsung Electronics Co., Ltd.
Ex. 1011, p. 32

[0030] Also described herein is a memory module wherein the controller is operable to configure memory space in the memory module based on at least one of a command received from the memory controller, a programmable value written into a register, a value corresponding to a first portion of the volatile memory subsystem, a value corresponding to a first portion of the non-volatile memory subsystem, and a timing value.

[0031] Also described herein is a memory module wherein the controller configures the memory space of the memory module using at least a first portion of the volatile memory subsystem and a first portion of the non-volatile memory subsystem, and the controller presents a unified memory space to the memory controller.

[0032] Also described herein is a memory module wherein the controller configures the memory space in the memory module using partitioning instructions that are application-specific.

[0033] Also described herein is a memory module wherein the controller is operable to copy booting information from the non-volatile to the volatile memory subsystem during power up.

[0034] Also described herein is a memory module wherein the controller includes a volatile memory control module, a non-volatile memory control module, data manager control module, a command interpreter module, and a scheduler module.

[0035] Also described herein is a memory module wherein commands from the volatile memory control module to the volatile memory subsystem are subordinated to commands from the memory controller to the controller.

Samsung Electronics Co., Ltd.
Ex. 1011, p. 33

[0036] Also described herein is a memory module wherein the controller effects pre-fetching of data from the non-volatile to the volatile memory.

[0037] Also described herein is a memory module wherein the pre-fetching is initiated by the memory controller writing an address of requested data into a register of the controller.

[0038] Also described herein is a memory module wherein the controller is operable to initiate a copy operation of data of a closed block in the volatile memory subsystem to a target block in the non-volatile memory subsystem.

[0039] Also described herein is a memory module wherein, if the closed block is re-opened, the controller is operable to abort the copy operation and to erase the target block from the non-volatile memory subsystem.

[0040] Also described herein is a method for managing a memory module wherein the transfer of data includes a bidirectional transfer of data between the non-volatile and the volatile memory subsystems.

[0041] Also described herein is a method for managing a memory module further comprising operating the data manager to control one or more of data flow rate, data transfer size, data width size, data buffer size, data error monitoring, data error correction, and the starting time of the transfer of data.

Samsung Electronics Co., Ltd.
Ex. 1011, p. 34

[0042] Also described herein is a method for managing a memory module further comprising operating the data manager to control data traffic between the memory controller and at least one of the volatile and non-volatile memory subsystems.

[0043] Also described herein is a method for managing a memory module wherein data traffic control relates to any one or more of data transfer size, formatting information, direction of data flow, and the starting time of the transfer of data.

[0044] Also described herein is a method for managing a memory module wherein data traffic control by the data manager is based on instructions received from the controller.

[0045] Also described herein is a method for managing a memory module further comprising operating the data manager as a bi-directional data transfer fabric with two or more sets of data ports coupled to any one of the volatile and non-volatile memory subsystems.

[0046] Also described herein is a method for managing a memory module wherein at least one of the volatile and non-volatile memory subsystems comprises one or more memory segments.

[0047] Also described herein is a method for managing a memory module wherein each memory segment comprises at least one memory circuit, memory device, or memory die.

[0048] Also described herein is a method for managing a memory module wherein the volatile memory subsystem comprises DRAM memory.

Samsung Electronics Co., Ltd.
Ex. 1011, p. 35

[0049] Also described herein is a method for managing a memory module wherein the non-volatile memory subsystem comprises Flash memory.

[0050] Also described herein is a method for managing a memory module further comprising operating the data ports to independently and/or concurrently transfer data to or from one or more memory segments of the volatile or non-volatile memory subsystems.

[0051] Also described herein is a method for managing a memory module further comprising directing transfer of data bi-directionally between the volatile and non-volatile memory subsystems using the data manager and in response to memory access commands received by the controller from the memory controller.

[0052] Also described herein is a method for managing a memory module further comprising buffering the data transferred between the memory controller and non-volatile memory subsystem using the volatile memory subsystem.

[0053] Also described herein is a method for managing a memory module further comprising using the controller to perform one or more of memory address translation, memory address mapping, address domain conversion, memory access control, data error correction, and data width modulation between the volatile and non-volatile memory subsystems.

[0054] Also described herein is a method for managing a memory module further comprising using the controller to effect communication with a host system by the volatile memory subsystem in accordance with a prescribed protocol.

Samsung Electronics Co., Ltd.
Ex. 1011, p. 36

[0055] Also described herein is a method for managing a memory module wherein the prescribed protocol is selected from one or more of DDR, DDR2, DDR3, and DDR4 protocols.

[0056] Also described herein is a method for managing a memory module further comprising using the controller to configure memory space in the memory module based on at least one of a command received from the memory controller, a programmable value written into a register, a value corresponding to a first portion of the volatile memory subsystem, a value corresponding to a first portion of the non-volatile memory subsystem, and a timing value.

[0057] Also described herein is a method for managing a memory module wherein the controller configures the memory space of the memory module using at least a first portion of the volatile memory subsystem and a first portion of the non-volatile memory subsystem, and the controller presents a unified memory space to the memory controller.

[0058] Also described herein is a method for managing a memory module wherein the controller configures the memory space in the memory module using partitioning instructions that are application-specific.

[0059] Also described herein is a method for managing a memory module further comprising using the controller to copy booting information from the non-volatile to the volatile memory subsystem during power up.

[0060] Also described herein is a method for managing a memory module wherein the controller includes a volatile memory control module, the method further comprising generating

commands by the volatile memory control module in response to commands from the memory controller, and transmitting the generated commands to the volatile memory subsystem.

[0061] Also described herein is a method for managing a memory module further comprising pre-fetching of data from the non-volatile memory subsystem to the volatile memory subsystem.

[0062] Also described herein is a method for managing a memory module wherein the pre-fetching is initiated by the memory controller writing an address of requested data into a register of the controller.

[0063] Also described herein is a method for managing a memory module further comprising initiating a copy operation of data of a closed block in the volatile memory subsystem to a target block in the non-volatile memory subsystem.

[0064] Also described herein is a method for managing a memory module further comprising aborting the copy operation when the closed block of the volatile memory subsystem is re-opened, and erasing the target block in the non-volatile memory subsystem.

BRIEF DESCRIPTION OF THE DRAWINGS

[0065] The accompanying drawings, which are incorporated into and constitute a part of this specification, illustrate one or more examples of embodiments and, together with the description of example embodiments, serve to explain the principles and implementations of the embodiments.

Samsung Electronics Co., Ltd.
Ex. 1011, p. 38

[0066] In the drawings:

FIG. 1 is a block diagram illustrating the path of data transfer, via a CPU, of a conventional memory arrangement;

FIG. 2 is a block diagram of a known EcoRAM™ architecture;

FIGS. 3A and 3B are block diagrams of a non-volatile memory DIMM or NVDIMM;

FIGS. 4A and 4B are block diagrams of a Flash-DRAM hybrid DIMM or FDHDIMM;

FIG. 5A is a block diagram of a memory module 500 in accordance with certain embodiments described herein;

FIG. 5B is a block diagram showing some functionality of a memory module such as that shown in FIG. 5A;

FIG. 6 is a block diagram showing some details of the data manager (DMgr);

FIG. 7 is a functional block diagram of the on-module controller (CDC);

FIG. 8A is a block diagram showing more details of the prior art Flash-DRAM hybrid DIMM (FDHDIMM) of FIGS. 4A and 4B;

FIG. 8B is a block diagram of a Flash-DRAM hybrid DIMM (FDHDIMM) in accordance with certain embodiments disclosed herein;

FIG. 9 is a flow diagram directed to the transfer of data from Flash memory to DRAM memory and vice versa in an exemplary FDHDIMM;

FIG. 10 is a block diagram showing an example of mapping of DRAM address space to Flash memory address space; and

Samsung Electronics Co., Ltd.
Ex. 1011, p. 39

FIG. 11 is a table showing estimates of the maximum allowed closed blocks in a queue to be written back to Flash memory for different DRAM densities using various average block use time.

DESCRIPTION OF EXAMPLE EMBODIMENTS

[0067] Example embodiments are described herein in the context of a system of computers, servers, controllers, memory modules, hard disk drives and software. Those of ordinary skill in the art will realize that the following description is illustrative only and is not intended to be in any way limiting. Other embodiments will readily suggest themselves to such skilled persons having the benefit of this disclosure. Reference will now be made in detail to implementations of the example embodiments as illustrated in the accompanying drawings. The same reference indicators will be used to the extent possible throughout the drawings and the following description to refer to the same or like items.

[0068] In the interest of clarity, not all of the routine features of the implementations described herein are shown and described. It will, of course, be appreciated that in the development of any such actual implementation, numerous implementation-specific decisions must be made in order to achieve the developer's specific goals, such as compliance with application- and business-related constraints, and that these specific goals will vary from one implementation to another and from one developer to another. Moreover, it will be appreciated that such a development effort might be complex and time-consuming, but would nevertheless be

Samsung Electronics Co., Ltd.
Ex. 1011, p. 40

a routine undertaking of engineering for those of ordinary skill in the art having the benefit of this disclosure.

[0069] In accordance with this disclosure, the components, process steps, and/or data structures described herein may be implemented using various types of operating systems, computing platforms, computer programs, and/or general purpose machines. In addition, those of ordinary skill in the art will recognize that devices of a less general purpose nature, such as hardwired devices, field programmable gate arrays (FPGAs), application specific integrated circuits (ASICs), or the like, may also be used without departing from the scope and spirit of the inventive concepts disclosed herein. Where a method comprising a series of process steps is implemented by a computer or a machine and those process steps can be stored as a series of instructions readable by the machine, they may be stored on a tangible medium such as a computer memory device (e.g., ROM (Read Only Memory), PROM (Programmable Read Only Memory), EEPROM (Electrically Eraseable Programmable Read Only Memory), Flash memory, Jump Drive, and the like), magnetic storage medium (e.g., tape, magnetic disk drive, and the like), optical storage medium (e.g., CD-ROM, DVD-ROM, paper card, paper tape and the like) and other types of program memory.

[0070] The term "exemplary" where used herein is intended to mean "serving as an example, instance or illustration." Any embodiment described herein as "exemplary" is not necessarily to be construed as preferred or advantageous over other embodiments.

[0071] Disclosed herein are arrangements for improving memory access rates and addressing the high disparity (15 to 1 ratio) between the read and write data throughput rates. In one

Samsung Electronics Co., Ltd.
Ex. 1011, p. 41

arrangement, a Flash-DRAM-hybrid DIMM (FDHDIMM) with integrated Flash and DRAM is used. Methods for controlling such an arrangement are described.

[0072] In certain embodiments, the actual memory density (size or capacity) of the DIMM and/or the ratio of DRAM memory to Flash memory are configurable for optimal use with a particular application (for example, POS, inter-bank transaction, stock market transaction, scientific computation such as fluid dynamics for automobile and ship design, weather prediction, oil and gas expeditions, medical diagnostics such as diagnostics based on the fuzzy logic, medical data processing, simple information sharing and searching such as web search, retail store website, company home page, email or information distribution and archive, security service, and entertainment such as video-on-demand).

[0073] In certain embodiments, the device contains a high density Flash memory with a low density DRAM, wherein the DRAM is used as a data buffer for read/write operation. The Flash serves as the main memory. Certain embodiments described herein overcome the needs of having a long separation period between an Activate command (may be referred to as RAS) and a corresponding read or write command (may be referred to as first CAS command).

[0074] In accordance with one embodiment, described with reference to FIGS. 3A and 3B, a memory system 300 includes a non-volatile (for example Flash) memory subsystem 302 and a volatile (for example DRAM) memory subsystem 304. The examples of FIGS. 3A and 3B are directed to architectures of a non-volatile DIMM (NVDIMM) NVDIMM system that may use a power subsystem (not shown) that can include a battery or a capacitor as a means for energy storage to copy DRAM memory data into Flash memory when power loss occurs, is detected, or

Samsung Electronics Co., Ltd.
Ex. 1011, p. 42

is anticipated to occur during operation. When normal power is restored, a restore NVDIMM operation is initiated and the data stored in the Flash memory is properly restored to the DRAM memory. In this architecture, the density of the Flash is about the same as the DRAM memory size or within a few multiples, although in some applications it may be higher. This type of architecture may also be used to provide non-volatile storage that is connected to the FSB (front side bus) to support RAID (Redundant Array of Independent Disks) based systems or other type of operations. An NVDIMM controller 306 receives and interprets commands from the system memory controller hub (MCH). The NVDIMM controller 306 control the NVDIMM DRAM and Flash memory operations. In FIG. 3A, the DRAM 304 communicates data with the MCH, while an internal bus 308 is used for data transfer between the DRAM and Flash memory subsystems. In FIG. 3B, the NVDIMM controller 306' of NVDIMM 300' monitors events or commands and enables data transfer to occur in a first mode between the DRAM 304' and Flash 302' or in a second mode between the DRAM and the MCH.

[0075] In accordance with one embodiment, a general architecture for a Flash and DRAM hybrid DIMM (FDHDIMM) system 400 is shown in FIG. 4A. The FDHDIMM interfaces with an MCH (memory controller hub) to operate and behave as a high density DIMM, wherein the MCH interfaces with the non-volatile memory subsystem (for example Flash) 402 is controlled by an FDHDIMM controller 404. Although the MCH interfaces with the Flash via the FDHDIMM controller, the FDHDIMM overall performance is governed by the Flash access time. The volatile memory subsystem (for example DRAM) 406 is primarily used as a data buffer or a temporary storage location such that data from the Flash memory 402 is transferred to the DRAM 406 at the Flash access speed, and buffered or collected into the DRAM 406, which then transfers the buffered data to the MCH based on the access time of DRAM. Similarly,

Samsung Electronics Co., Ltd.
Ex. 1011, p. 43

when the MCH transfers data to the DRAM 406, the FDHDIMM controller 404 manages the data transfer from the DRAM 406 to the Flash 402. Since the Flash memory access speed (both read and write) is relatively slower than DRAM, (e.g. for example a few hundred microseconds for read access), the average data throughput rate of FDHDIMM 400 is limited by the Flash access speed. The DRAM 406 serves as a data buffer stage that buffers the MCH read or write data. Thus, the DRAM 406 serves as a temporary storage for the data to be transferred from/to the Flash 402. Furthermore, in accordance with one embodiment, the MCH recognizes the physical density of an FDHDIMM operating as a high density DIMM as the density of Flash alone.

[0076] In accordance with one embodiment, a read operation can be performed by the MCH by sending an activate command (may be simply referred to as RAS, or row address strobe) to the FDHDIMM 400 to conduct a pre-fetch read data operation from the Flash 402 to the DRAM 406, with the pre-fetch data size being for example a page (1KB or 2KB, or may be programmable to any size). The MCH then sends a read command (may be simply referred to as CAS, or column address strobe) to read the data out input of the DRAM. In this embodiment, the data transfer from Flash to DRAM occurs at Flash access speed rates, while data transfer from DRAM to MCH occurs at DRAM access speed rates. In this example, data latency and throughput rates are the same as any DRAM operation as long as the read operations are executed onto the pages that were opened with the activate command previously sent to pre-fetch data from the Flash to DRAM. Thus, a longer separation time period between the RAS (e.g. Activate command) and the first CAS (column address strobe e.g. read or write command) is required to account for the time it takes to pre-fetch data from the Flash to DRAM.

Samsung Electronics Co., Ltd.
Ex. 1011, p. 44

[0077] An example of FDHDIMM operating as a DDR DIMM with SSD is shown in FIG. 4B, wherein the FDHDIMM 400'supports two different interface interpretations to the MCH. In the first interface interpretation, the MCH views the FDHDIMM 400' as a combination of DRAM DIMM and SSD (not illustrated). In this mode the MCH needs to manage two address spaces, one for the DRAMs 402' and one for the Flash 404'. The MCH is coupled to, and controls, both of the DRAM and Flash memory subsystems. One advantage of this mode is that the CPU does not need to be in the data path when data is moved from DRAM to Flash or from Flash to DRAM. In the second interface interpretation, the MCH views the FDHDIMM 400' as an on-DIMM Flash with the SSD in an extended memory space that is behind the DRAM space. Thus, in this mode, the MCH physically fetches data from the SSD to the DDR DRAM and then the DRAM sends the data to the MCH. Since all data movement occurs on the FDHDIMM, this mode will provide better performance than if the data were to be moved through or via the CPU.

[0078] In accordance with one embodiment and as shown in FIG. 4B, the FDHDIMM 400' receives control signals 408 from the MCH, where the control signals may include one or more control signals specifically for the DRAM 402' operation and one or more control signals specifically for the Flash 404' operation. In this embodiment, the MCH or CPU is coupled to the FDHDIMM via a single data bus interface 410 which couples the MCH to the DRAM.

[0079] FIGS. 5A and 5B are block diagrams of a memory module 500 that is couplable to a host system (not shown). The host system may be a server or any other system comprising a memory system controller or an MCH for providing and controlling the read/write access to one or more memory systems, wherein each memory system may include a plurality of memory subsystems, a plurality of memory devices, or at least one memory module. The term

Samsung Electronics Co., Ltd.
Ex. 1011, p. 45

"read/write access" means the ability of the MCH to interface with a memory system or subsystem in order to write data into it or read data from it, depending on the particular requirement at a particular time.

[0080] In certain embodiments, memory module 500 is a Flash-DRAM hybrid memory subsystem which may be integrated with other components of a host system. In certain embodiments, memory module 500 is a Flash-DRAM hybrid memory module that has the DIMM (dual-inline memory module) form factor, and may be referred to as a FDHDIMM, although it is to be understood that in both structure and operation it may be different from the FDHDIMM discussed above and described with reference to FIGS. 4A and 4B. Memory module 500 includes two on-module intermediary components: a controller and a data manager. These on-module intermediary components may be physically separate components, circuits, or modules, or they may be integrated onto a single integrated circuit or device, or integrated with other memory devices, for example in a three dimensional stack, or in any one of several other possible expedients for integration known to those skilled in the art to achieve a specific design, application, or economic goal. In the case of a DIMM, these on-module intermediary components are an on-DIMM Controller (CDC) 502 and an on-DIMM data manager (DMgr) 504. While the DIMM form factor will predominate the discussion herein, it should be understood that this is for illustrative purposes only and memory systems using other form factors are contemplated as well. CDC 502 and data manager DMgr 504 are operative to manage the interface between a non-volatile memory subsystem such as a Flash 506, a volatile memory subsystem such as a DRAM 508, and a host system represented by MCH 510.

Samsung Electronics Co., Ltd.
Ex. 1011, p. 46

[0081] In certain embodiments, CDC 502 controls the read/write access to/from Flash memory 506 from/to DRAM memory 508, and to/from DRAM memory from/to MCH 510. Read/write access between DRAM 508, Flash 506 and MCH 510 may be referred to herein generally as communication, wherein control and address information C/A 560 is sent from MCH 510 to CDC 502, and possible data transfers follow as indicated by Data 550, Data 555, and/or Data 556. In certain embodiments, the CDC 502 performs specific functions for memory address transformation, such as address translation, mapping, or address domain conversion, Flash access control, data error correction, manipulation of data width or data formatting or data modulation between the Flash memory and DRAM, and so on. In certain embodiments, the CDC 502 ensures that memory module 500 provides transparent operation to the MCH in accordance with certain industry standards, such as DDR, DDR2, DDR3, DDR4 protocols. In the arrangement shown in FIGS. 5A and 5B, there is no direct access from the MCH 510 to the Flash 506 memory subsystem. Thus in accordance with certain embodiments, the Flash access speed has minimal impact on the overall FDHDIMM access speed. In the schematic illustration of FIG. 5B and in accordance with one embodiment, the CDC controller 502 receives standard DDR commands from the MCH, interprets, and produces commands and/or control signals to control the operation of the Data manager (DMgr), the Flash memory and the DRAM memory. The DMgr controls the data path routing amongst DRAMs, Flash and MCH, as detailed below. The data path routing control signals are independently operated without any exclusivity.

[0082] An exemplary role of DMgr 504 is described with reference to FIG. 6. In certain embodiments and in response to communication from CDC 502, DMgr 504 provides a variety of functions to control data flow rate, data transfer size, data buffer size, data error monitoring or data error correction. For example, these functions or operations can be performed on-the-fly

Samsung Electronics Co., Ltd.
Ex. 1011, p. 47

(while data is being transferred via the DMgr 504) or performed on buffered or stored data in DRAM or a buffer. In addition, one role of DMgr 504 is to provide interoperability among various memory subsystems or components and/or MCH 510.

[0083] In one embodiment, an exemplary host system operation begins with initialization. The CDC 502 receives a first command from the MCH 510 to initialize FDHDIMM 500 using a certain memory space. The memory space as would be controlled by MCH 510 can be configured or programmed during initialization or after initialization has completed. The MCH 510 can partition or parse the memory space in various ways that are optimized for a particular application that the host system needs to run or execute. In one embodiment, the CDC 502 maps the actual physical Flash 506 and DRAM 508 memory space using the information sent by MCH 510 via the first command. In one embodiment, the CDC 502 maps the memory address space of any one of the Flash 506 and DRAM 508 memory subsystems using memory address space information that is received from the host system, stored in a register within FDHDIMM 500, or stored in a memory location of a non-volatile memory subsystem, for example a portion of Flash 506 or a separate non-volatile memory subsystem. In one embodiment, the memory address space information corresponds to a portion of initialization information of the FDHDIMM 500.

[0084] In one embodiment, MCH 510 may send a command to restore a certain amount of data information from Flash 506 to DRAM 508. The CDC 502 provides control information to DMgr 504 to appropriately copy the necessary information from Flash 506 to the DRAM 508. This operation can provide support for various host system booting operations and/or a special host system power up operation.

Samsung Electronics Co., Ltd.
Ex. 1011, p. 48

[0085] In one embodiment, MCH 510 sends a command which may include various fields comprising control information regarding data transfer size, data format options, and/or startup time. CDC 502 receives and interprets the command and provides control signals to DMgr 504 to control the data traffic between the Flash 506, the DRAM 508, and the MCH 510. For example, DMgr 504 receives the data transfer size, formatting information, direction of data flow (via one or more multiplexers such as 611, 612, 621, 622 as detailed below), and the starting time of the actual data transfer from CDC 502. DMgr 504 may also receive additional control information from the CDC 502 to establish a data flow path and/or to correctly establish the data transfer fabric. In certain embodiments, DMgr 504 also functions as a bi-directional data transfer fabric. For example, DMgr 504 may have more than 2 sets of data ports facing the Flash 506 and the DRAM 508. Multiplexers 611 and 612 provide controllable data paths from any one of the DRAMs 508(1) and 508(2) (DRAM-A and DRAM-B) to any one of the MCH 510 and the Flash 506. Similarly multiplexers 621 and 622 provide controllable data paths from any one of the MCH and the Flash memory to any one of the DRAMs 508(1) and 508(2) (DRAM-A and DRAM-B). In one embodiment, DRAM 508(1) is a segment of DRAM 508, while in other embodiments, DRAM 508(1) is a separate DRAM memory subsystem. It will be understood that each memory segment can comprise one or more memory circuits, a memory devices, and/or memory integrated circuits. Of course other configurations for DRAM 508 are possible, and other data transfer fabrics using complex data paths and suitable types of multiplexing logic are contemplated.

[0086] In accordance with one embodiment, the two sets of multiplexors 611, 612 and 621, 622 allow independent data transfer to Flash 506 from DRAM-A 508(1) and DRAM-B 508(2). For example, in response to one or more control signals or a command from CDC 502, DMgr

Samsung Electronics Co., Ltd.
Ex. 1011, p. 49

504 can transfer data from DRAM-A 508(1) to MCH 510, via multiplexer 611, at the same time as from DRAM-B 508(2) to the Flash 506, via multiplexer 612; or data is transferred from DRAM-B 508(2) to MCH 510, via multiplexer 611, and simultaneously data is transferred from the Flash 506 to DRAM-A 508(1), via multiplexer 621. Further, in the same way that data can be transferred to or from the DRAM in both device-wide or segment-by-segment fashion, data can be transferred to or from the flash memory in device-wide or segment-by-segment fashion, and the flash memory can be addressed and accessed accordingly.

[0087] In accordance with one embodiment the illustrated arrangement of data transfer fabric of DMgr 504 also allows the CDC 502 to control data transfer from the Flash memory to the MCH by buffering the data from the Flash 506 using a buffer 602, and matching the data rate and/or data format of MCH 510. The buffer 602 is shown in FIG. 6 as a portion of a data format module 604; however, buffer 602 may also be a distributed buffer such that one buffer is used for each one of the set of multiplexer logic elements shown as multiplexers 611, 612, 621, and 622. Various buffer arrangements may be used, such as a programmable size buffer to meet the requirement of a given system design requirement, for example the disparity between read/write access time; or overall system performance, for example latency. In certain embodiments, the buffer 604 may introduce one or more clock cycle delays into a data communication path between MCH 510, DRAM 508, and Flash 506.

[0088] In certain embodiments, data format module 604 contains a data formatting subsystem (not shown) to enable DMgr 504 to format and perform data transfer in accordance with control information received from CDC502. Data buffer 604 of data format module 602, discussed above, also supports a wide data bus 606 coupled to the Flash memory 506 operating

Samsung Electronics Co., Ltd.
Ex. 1011, p. 50

at a first frequency, while receiving data from DRAM 508 using a relatively smaller width data bus 608 operating at a second frequency, the second frequency being larger than the first frequency in certain embodiments. The buffer 602 is designed to match the data flow rate between the DRAM 508 and the Flash 506.

[0089] A register 690 provides the ability to register commands received from MCH 510 via C/A 560 (FIG. 5A). The register 690 may communicate these commands to CDC 502 and/or to the DRAM 508 and/or Flash 506. The register 690 communicates these registered commands to CDC 502 for processing. The register 690 may also include multiple registers (not shown), such that it can provide the ability to register multiple commands, a sequence of commands, or provide a pipeline delay stage for buffering and providing a controlled execution of certain commands received form MCH 510.

[0090] In certain embodiments, the register 690 may register commands from MCH 510 and transmit the registered commands to DRAM 508 and/or Flash 506 memory subsystems. In certain embodiments, the CDC 502 monitors commands received from MCH 510, via control and address bus C/A 560, and provides appropriate control information to DMgr 504, DRAM 508, or Flash 506 to execute these commands and perform data transfer operations between MCH 510 and FDHDIMM 500 via MCH data bus 610.

[0091] FIG. 7 illustrates a functional block diagram of the CDC 502. In certain embodiments, the major functional blocks of the CDC 502 are a DRAM control block DRAMCtrl 702, Flash control block FlashCtrl 704, MCH command interpreter CmdInt 706, DRAM-Flash interface scheduler Scheduler 708, and DMgr control block (DMgrCtrl) 710.

Samsung Electronics Co., Ltd.
Ex. 1011, p. 51

[0092] In accordance with one embodiment, DRAMCtrl 702 generates DRAM commands that are independent from the commands issued by the MCH 510. In accordance with one embodiment, when the MCH 510 initiates a read/write operation from/to the same DRAM 508 that is currently executing a command from the DRAMCtrl 702, then the CDC 502 may choose to instruct DRAMCtrl 702 to abort its operation in order to execute the operation initiated by the MCH. However, the CDC 502 may also pipeline the operation so that it causes DRAMCtrl 702 to either halt or complete its current operation prior to executing that of the MCH. The CDC 502 may also instruct DRAMCtrl 702 to resume its operation once the command from MCH 510 is completed.

[0093] In accordance with one embodiment, the FlashCtrl 704 generates appropriate Flash commands for the proper read/write operations. The CmdInt 706 intercepts commands received from MCH 510 and generates the appropriate control information and control signals and transmit them to the appropriate FDHDIMM functional block. For example, CmdInt 706 issues an interrupt signal to the DRAMCtrl 702 when the MCH issues a command that collides (conflicts) with the currently executing or pending commands that DRAMCtrl 702 has initiated independently from MCH 510, thus subordinating these commands to those from the MCH. The Scheduler 708 schedules the Flash–DRAM interface operation such that there is no resource conflict in the DMgr 504. In accordance with one embodiment, the Scheduler 708 assigns time slots for the DRAMCtrl 702 and FlashCtrl 704 operation based on the current status and the pending command received or to be received from the MCH. The DMgrCtrl 710 generates and sends appropriate control information and control signals for the proper operation and control of the data transfer fabric to enable or disable data paths between Flash 506, DRAM 508, and the MCH 510.

[0094] FIG. 8A is a block diagram showing a Flash-DRAM hybrid DIMM (FDHDIMM) 801. As seen from FIG. 8A, this Flash-DRAM hybrid DIMM requires two separate and independent address buses to separately control the address spaces: one for the Flash memory Flash 803 and the other for the DRAM memory DRAM 805. The MCH 810 treats the DRAM 805 and Flash 803 as separate memory subsystems, for example DRAM and SSD/HD memory subsystems. The memory in each address space is controlled directly by the MCH. However, the on-DIMM data path 807 between Flash 803 and DRAM 805 allows for direct data transfer to occur between the Flash 803 and the DRAM 805 in response to control information from Ctrl 830. In this embodiment, this data transfer mechanism provides direct support for executing commands from the MCH without having the MCH directly controlling the data transfer, and thus improving data transfer performance from Flash 803 to the DRAM 805. However, the MCH needs to manage two address spaces and two different memory protocols simultaneously. Moreover, the MCH needs to map the DRAM memory space into the Flash memory space, and the data interface time suffers due to the difference in the data access time between the Flash memory and the DRAM memory.

[0095] In accordance with one embodiment, a memory space mapping of a Flash-DRAM hybrid DIMM is shown in FIG. 8B. A memory controller of a host system (not shown) controls both of the DRAM 508 address space and the Flash 506 address space using a single unified address space. The CDC 502 receives memory access commands from the MCH and generates control information for appropriate mapping and data transfer between Flash and DRAM memory subsystem to properly carry out the memory access commands. In one embodiment, the memory controller of the host system views the large Flash memory space as a DRAM memory space, and accesses this unified memory space with a standard DDR (double data rate)

Samsung Electronics Co., Ltd.
Ex. 1011, p. 53

protocol used for accessing DRAM. The unified memory space in this case can exhibit overlapping memory address space between the Flash 506 and the DRAM 508. The overlapping memory address space may be used as a temporary storage or buffer for data transfer between the Flash 506 and the DRAM 508. For example, the DRAM memory space may hold a copy of data from the selected Flash memory space such that the MCH can access this data normally via DDR memory access commands. The CDC 502 controls the operation of the Flash 506 and DRAM 508 memory subsystems in response to commands received from a memory controller of a host system.

[0096] In one embodiment, the unified memory space corresponds to a contiguous address space comprising a first portion of the address space of the Flash 506 and a first portion of the address space of the DRAM 508. The first portion of the address space of the Flash 506 can be determined via a first programmable register holding a first value corresponding to the desired Flash memory size to be used. Similarly, the first portion of the address space of the DRAM 508 can be determined via a second programmable register holding a second value corresponding to the desired DRAM memory size to be used. In one embodiment, any one of the first portion of the address space of the Flash 506 and the first portion of the address space of the DRAM 508 is determined via a first value corresponding to a desired performance or memory size, the first value being received by the CDC 502 via a command sent by memory controller of the host system.

[0097] In accordance with one embodiment, a flow diagram directed to the transfer of data from Flash memory to DRAM memory and vice versa in an exemplary FDHDIMM is shown in Fig. 9. In certain embodiments, data transfer from the Flash 506 to the DRAM 508 occurs in

Samsung Electronics Co., Ltd.
Ex. 1011, p. 54

accordance with memory access commands which the CDC 502 receives from the memory controller of the host system. In certain embodiments, the CDC 502 controls the data transfer from the DRAM 508 to the Flash 506 so as to avoid conflict with any memory operation that is currently being executed. For example, when all the pages in a particular DRAM memory block are closed. The CDC 502 partitions the DRAM memory space into a number of blocks for the purpose of optimally supporting the desired application. The controller can configure memory space in the memory module based on at least one of one or more commands received from the MCH, instructions received from the MCH, a programmable value written into a register, a value corresponding to a first portion of the volatile memory subsystem, a value corresponding to a first portion of the non-volatile memory subsystem, and a timing value. Furthermore, the block size can be configurable by the memory controller of the host system, such that the number pages in a block can be optimized to support a particular application or a task. Furthermore, the block size may be configured on-the-fly, e.g. CDC 502 can receive instruction regarding a desired block size from the memory controller via a memory command, or via a programmable value.

[0098] In certain embodiments, a memory controller can access the memory module using a standard access protocol, such as JEDEC's DDR DRAM, by sending a memory access command to the CDC 502 which in turn determines what type of a data transfer operation it is and the corresponding target address where the data information is stored, e.g. data information is stored in the DRAM 508 or Flash 506 memory subsystems. In response to a read operation, if the CDC 502 determines that data information, e.g. a page (or block), does not reside in the DRAM 508 but resides in Flash 506, then the CDC 502 initiates and controls all necessary data transfer operations from Flash 506 to DRAM 508 and subsequently to the memory controller. In one

Samsung Electronics Co., Ltd.
Ex. 1011, p. 55

embodiment, once the CDC 502 completes the data transfer operation of the requested data information from the Flash 506 to the DRAM 508, the CDC 502 alerts the memory controller to retrieve the data information from the DRAM 508. In on embodiment, the memory controller initiates the copying of data information from Flash 506 to DRAM 508 by writing, into a register in the CDC 502, the target Flash address along with a valid block size. The CDC 502 in turn, executes appropriate operations and generates control information to copy the data information to the DRAM 508. Consequently, the memory controller can access or retrieve the data information using standard memory access commands or protocol.

[0099] An exemplary flow chart is shown in FIG. 9, a starting step or power up 902, is followed by an initialization step 904, the memory controller initiates, at step 906, a data move from the Flash 506 to the DRAM 508 by writing target address and size, to a control register in the CDC 502, which then copies, at 908, data information from the Flash 506 to the DRAM 508 and erases the block in the Flash. Erasing the data information from Flash may be accomplished independently from (or concurrently with) other steps that CDC 502 performs in this flow chart, i.e. other steps can be executed concurrently with the Erase the Flash block step. Once the data information or a block of data information is thus moved to the DRAM 508, the memory controller can operate on this data block using standard memory access protocol or commands at 910. The CDC 502 checks, at 912, if any of the DRAM 508 blocks, or copied blocks, are closed. If the memory controller closed any open blocks in DRAM 508, then the CDC 502 initiate a Flash write to write the closed block from the DRAM 508 to the Flash 506, at 914. In addition, the memory controller, at 916, reopens the closed block that is currently being written into the Flash 506, then the CDC 502 stops the Flash write operation and erases the Flash block which

Samsung Electronics Co., Ltd.
Ex. 1011, p. 56

was being written to, as shown at 918. Otherwise, the CDC 502 continues and completes the writing operation to the Flash at 920.

[00100] The dashed lines in FIG. 9 indicate independent or parallel activities that can be performed by the CDC 502. At any time the CDC 502 receives a DRAM load command from a memory controller which writes a Flash target address and/or block size information into the RC register(s) at 922, as described above, then the CDC 502 executes a load DRAM w/RC step 906 and initiates another branch (or a thread) of activities that includes steps 908 – 922. In one embodiment, the CDC 502 controls the data transfer operations between DRAM 508 and Flash 506 such that the Flash 506 is completely hidden from the memory controller. The CDC 502 monitors all memory access commands sent by the memory controller using standard DRAM protocol and appropriately configures and manipulate both Flash 506 and DRAM 508 memory subsystems to perform the requested memory access operation and thus achieve the desired results. The memory controller does not interface directly with the Flash memory subsystem. Instead, the memory controller interfaces with the CDC 502 and/or DMgr 504 as shown in Fig. 5 and Fig. 6. Moreover, the memory controller may use one or more protocol, such as DDR, DDR2, DDR3, DDR4 protocols or the like.

[00101] In accordance with one embodiment, an example of mapping a DRAM address space to Flash memory address space is shown in FIG. 10. Two sets (1002, 1004) of address bits AD6 to AD17, forming a 24 bit extended memory page address, are allocated for the block address. For example, assuming a Block size of 256K Bytes, then a 24-bit block address space (using the two sets of AD6 to AD17 1002 and 1004) would enable access to 4TB of Flash memory storage space. If a memory module has 1GB of DRAM storage capacity, then it can hold approximately

Samsung Electronics Co., Ltd.
Ex. 1011, p. 57

4K Blocks of data in the DRAM memory, each Block comprise 256 K Bytes of data. The DRAM address space, corresponding to the 4K blocks, can be assigned to different virtual ranks and banks, where the number of virtual ranks and banks is configurable and can be manipulated to meet a specific design or performance needs. For example, if a 1G Bytes memory module is configured to comprise two ranks with eight banks per rank, then each bank would hold two hundred fifty (250) blocks or the equivalent of 62 M Bytes or 62K pages, where each page correspond to a 1K Bytes. Other configurations using different page, block, banks, or ranks numbers may also be used. Furthermore, an exemplary mapping of 24-bit DDR DIMM block address to Flash memory address, using Block addressing as described above, is shown in Fig. 10. The 24-bit can be decomposed into fields, such as a logical unit number LUN address 1060 field, a Block address 1050 field, a Plane address 1040, a Page address 1030, and a group of least significant address bits A_0A_1 1020. The Plane address 1040 is a sub address of the block address, and it may be used to support multiple page IO so as to improve Flash memory subsystem operation. In this example, it is understood that different number of bits may be allocated to each field of the 24-bit

[00102] The CDC 502 manages the block write-back operation by queuing the blocks that are ready to be written back to the Flash memory. As described above, if any page in a queued block for a write operation is reopened, then the CDC 502 will stop the queued block write operation, and remove the block from the queue. Once all the pages in a block are closed, then the CDC 502 restarts the write-back operation and queue the block for a write operation.

[00103] In accordance with one embodiment, an exemplary read operation from Flash 506 to DRAM 508 can be performed in approximately 400μs, while a write operation from DRAM 508

Samsung Electronics Co., Ltd.
Ex. 1011, p. 58

to Flash 506 can be performed in approximately 22ms resulting in a read to write ratio of 55 to 1. Therefore, if the average time a host system's memory controller spends accessing data information in a Block of DRAM is about 22ms (that is the duration that a Block comprises one or more pages that are open), then the block write-back operation from DRAM to Flash would not impact performance and hence the disparity between read and write access may be completely hidden from the memory controller. If the block usage time is 11ms instead of 22ms, then the CDC 502 control the data transfer operation between DRAM 508 and Flash 506 such that there are no more than 9 closed blocks in the queue to be written-back to the Flash memory, hence approximately an average of 100ms can be maintained for a standard DDR DRAM operation. Moreover, the number of closed Blocks in the queue to be written-back to the Flash memory subsystem varies with the average block usage time and the desired performance for a specific host system or for a specific application running using the host system resources.

[00104] Consequently, the maximum number of closed Blocks to be written-back to Flash can be approximated to be

((#of blocks per bank)/(ratio of 'Flash_block_write_time' to 'Flash_read_time'))*((Block usage time)/('Flash_block_write_time'))

[00105] In order to maintain less than 100ms time period for queued write-back Blocks, then using a Flash memory subsystem having 22ms write access time per Block would results in a maximum number of four Blocks to be queued for write operation to Flash 506. Therefore, on average approximately 88ms (= 22ms * 4) for blocks means that each bank should not have more than four Blocks that need to be written back to the Flash 506.

Samsung Electronics Co., Ltd.
Ex. 1011, p. 59

[00106] The above equation also indicates that bigger DRAM memory space can support shorter block usage times. For example, 2GB of DRAM memory allows the 8 closed blocks to be written-back to Flash. The table in FIG. 11 provides an estimation of the maximum allowed closed blocks in the queue to be written back to the Flash memory for different DRAM density using various average block use time.

[00107] While embodiments and applications have been shown and described, it would be apparent to those skilled in the art having the benefit of this disclosure that many more modifications than mentioned above are possible without departing from the inventive concepts disclosed herein. The invention, therefore, is not to be restricted except in the spirit of the appended claims.

Samsung Electronics Co., Ltd.
Ex. 1011, p. 60

CLAIMS

What is claimed is:

1. A memory module comprising:

a first plurality of data signal lines forming a first data bus;

a second plurality of data signal lines forming a second data bus;

a third plurality of data signal lines forming a data bus;

a data manager coupled to the data bus, the first data bus, and the second data bus, wherein the memory module is couplable to a memory controller of a host system using the data bus, a control bus, and an address bus;

a non-volatile memory subsystem coupled to the data manager using the first data bus, the non-volatile memory subsystem operable to communicate data signals with the data manager by way of the first data bus;

a volatile memory subsystem coupled to the data manager using the second data bus, the volatile memory subsystem operable to communicate data signals with the data manager by way of the second data bus; and

a controller operable to receive one or more memory access commands from the memory controller of the host system by way of the control bus and the address bus, the controller operable to generate at least one of a first, second and third plurality of signals in response to the one or more memory access commands received from the memory controller of the host system, the controller operable to direct (i) operation of the non-volatile memory subsystem using the first plurality of signals, (ii) operation of the volatile memory subsystem using the second plurality of signals, and (iii) operation of the data manager using the third plurality of signals.

Samsung Electronics Co., Ltd.
Ex. 1011, p. 61

ABSTRACT

A memory module that is couplable to a memory controller hub (MCH) of a host system includes a non-volatile memory subsystem, a data manager coupled to the non-volatile memory subsystem, a volatile memory subsystem coupled to the data manager and operable to exchange data with the non-volatile memory subsystem by way of the data manager, and a controller operable to receive read/write commands from the MCH and to direct transfer of data between any two or more of the MCH, the volatile memory subsystem, and the non-volatile memory subsystem based on the commands.

Samsung Electronics Co., Ltd.
Ex. 1011, p. 62

Electronic Acknowledgement Receipt

EFS ID:	23339494
Application Number:	14840865
International Application Number:	
Confirmation Number:	2445
Title of Invention:	FLASH-DRAM HYBRID MEMORY MODULE
First Named Inventor/Applicant Name:	Hyun Lee
Customer Number:	22204
Filer:	Khaled Shami/George Hinton
Filer Authorized By:	Khaled Shami
Attorney Docket Number:	062453-036
Receipt Date:	31-AUG-2015
Filing Date:	
Time Stamp:	16:24:37
Application Type:	Utility under 35 USC 111(a)

Payment information:

Submitted with Payment	no

File Listing:

Document Number	Document Description	File Name	File Size(Bytes)/ Message Digest	Multi Part /.zip	Pages (if appl.)
1	Drawings-only black and white line drawings	20150831_Drawings_062453-036.pdf	932503 1cfa192aee65744bca4fc2e66b66b833badb7474	no	10

Warnings:

Information:

2	Oath or Declaration filed	20150831_Declaration_062453-036.pdf	452725 8d46a1fbbc611ec470054168069dd74b0f1d2d22	no	5
Warnings:					
Information:					
3	Information Disclosure Statement (IDS) Form (SB08)	20150831_IDS_062453-036.pdf	625037 70d0d218d78d655a8018ff572b857c37a769aa92	no	16
Warnings:					
Information:					
4	Application Data Sheet	20150831_ADS_062453-036.pdf	1819865 a103c4b4ce56a9e2ba68f3812f79c9d30c256b3d	no	8
Warnings:					
Information:					
5		20150831_Specification_062453-036.pdf	164709 9b31d15d6bcb49c33d7a005af0f5c08245e00777	yes	38

Multipart Description/PDF files in .zip description

Document Description	Start	End
Specification	1	36
Claims	37	37
Abstract	38	38

Warnings:

Information:

Total Files Size (in bytes):	3994839

This Acknowledgement Receipt evidences receipt on the noted date by the USPTO of the indicated documents, characterized by the applicant, and including page counts, where applicable. It serves as evidence of receipt similar to a Post Card, as described in MPEP 503.

New Applications Under 35 U.S.C. 111
If a new application is being filed and the application includes the necessary components for a filing date (see 37 CFR 1.53(b)-(d) and MPEP 506), a Filing Receipt (37 CFR 1.54) will be issued in due course and the date shown on this Acknowledgement Receipt will establish the filing date of the application.

National Stage of an International Application under 35 U.S.C. 371
If a timely submission to enter the national stage of an international application is compliant with the conditions of 35 U.S.C. 371 and other applicable requirements a Form PCT/DO/EO/903 indicating acceptance of the application as a national stage submission under 35 U.S.C. 371 will be issued in addition to the Filing Receipt, in due course.

New International Application Filed with the USPTO as a Receiving Office
If a new international application is being filed and the international application includes the necessary components for an international filing date (see PCT Article 11 and MPEP 1810), a Notification of the International Application Number and of the International Filing Date (Form PCT/RO/105) will be issued in due course, subject to prescriptions concerning national security, and the date shown on this Acknowledgement Receipt will establish the international filing date of the application.

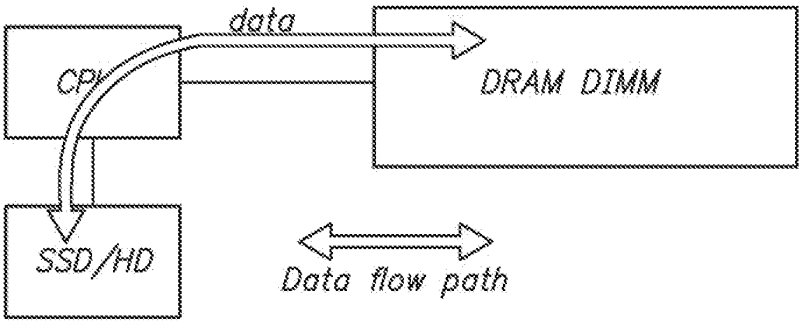

FIG. 1
(PRIOR ART)

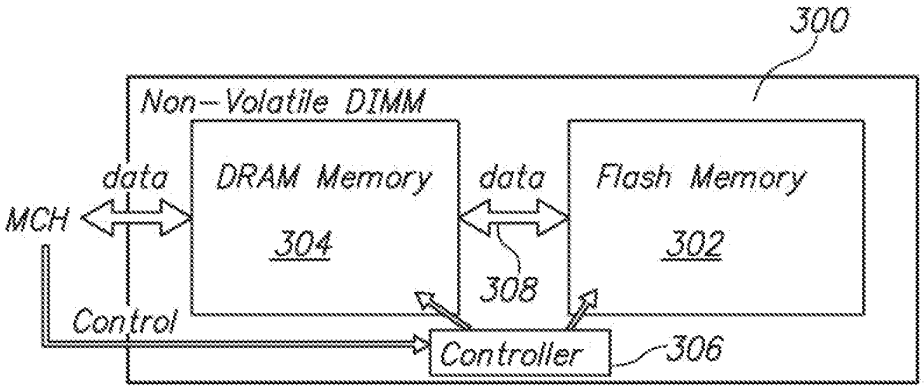

FIG. 3A

Spansion EcoRAM Configurations

256GB Spansion EcoRAM Solution – Single Accelerator

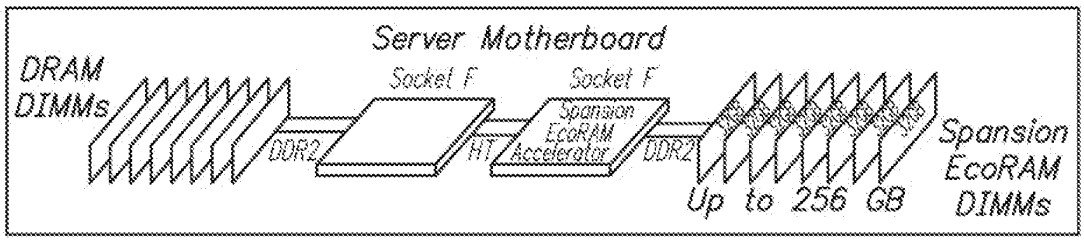

256GB Single Accelerator Spansion EcoRAM Solution

256GB Spansion EcoRAM Solution – Dual Accelerator

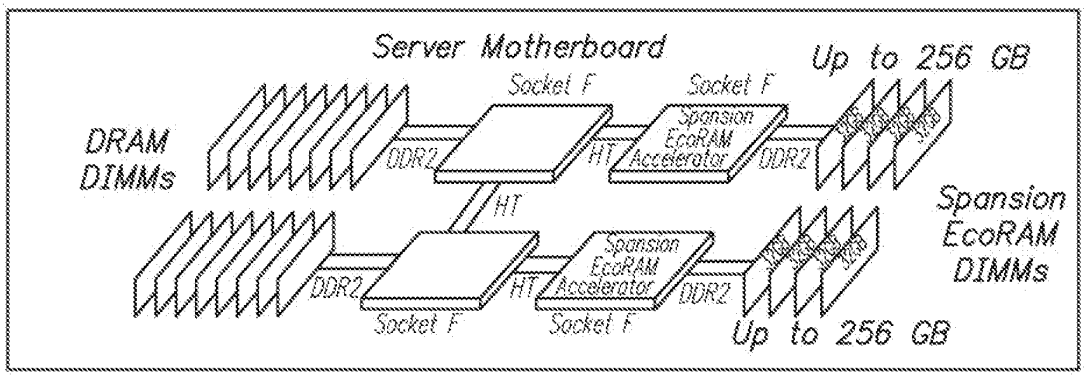

256GB Single Accelerator Spansion EcoRAM Solution

FIG. 2
(PRIOR ART)

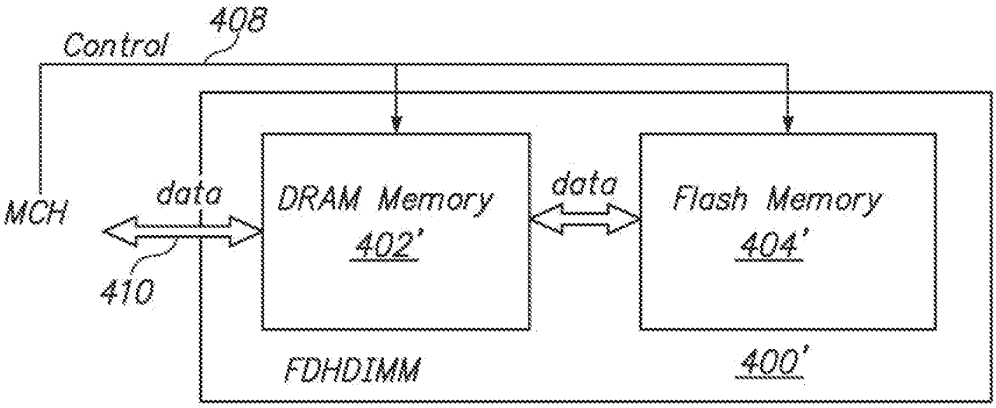

FIG. 4B

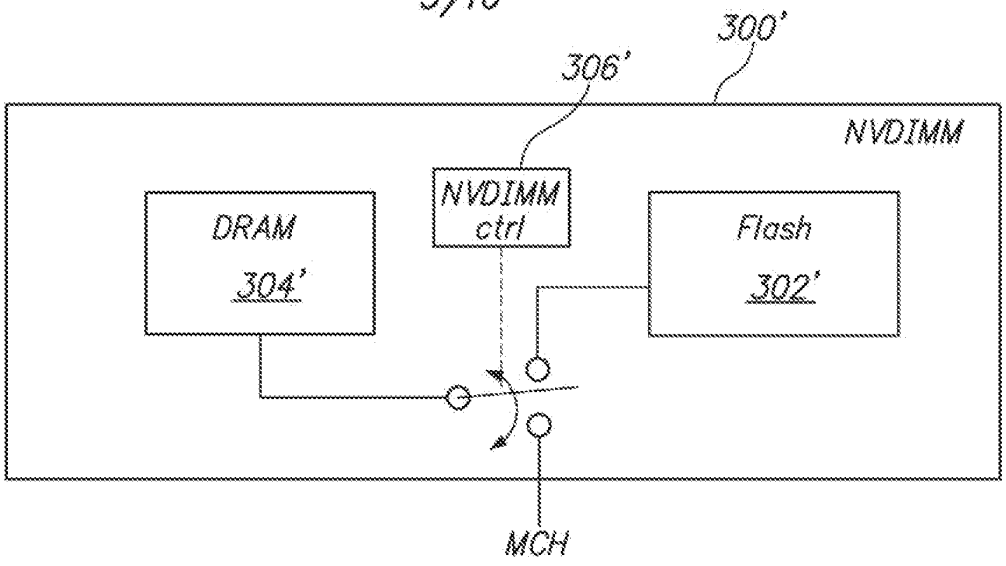
300'
306'
NVDIMM
NVDIMM ctrl
DRAM
304'
Flash
302'
MCH

FIG. 3B

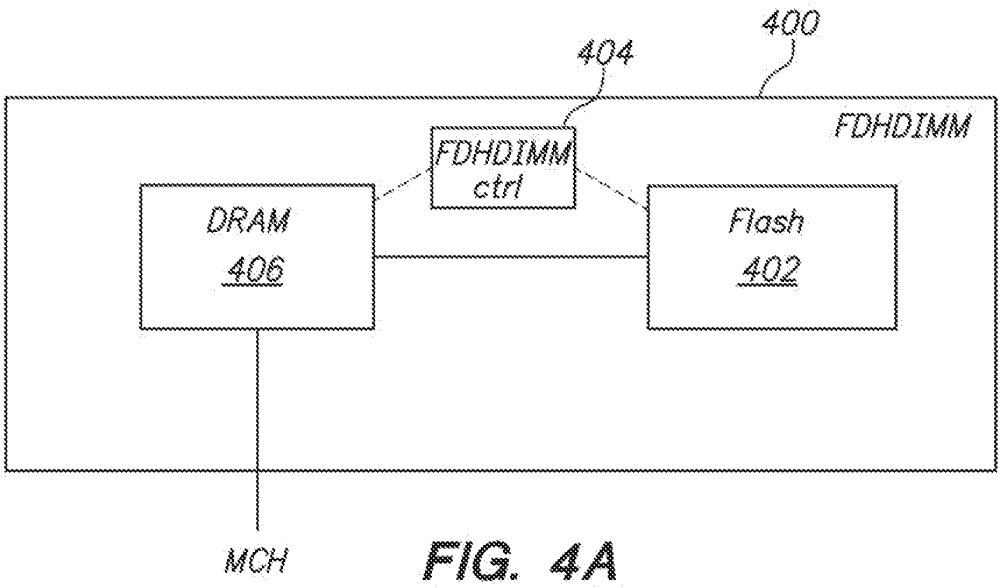
400
404
FDHDIMM
FDHDIMM ctrl
DRAM
406
Flash
402
MCH

FIG. 4A

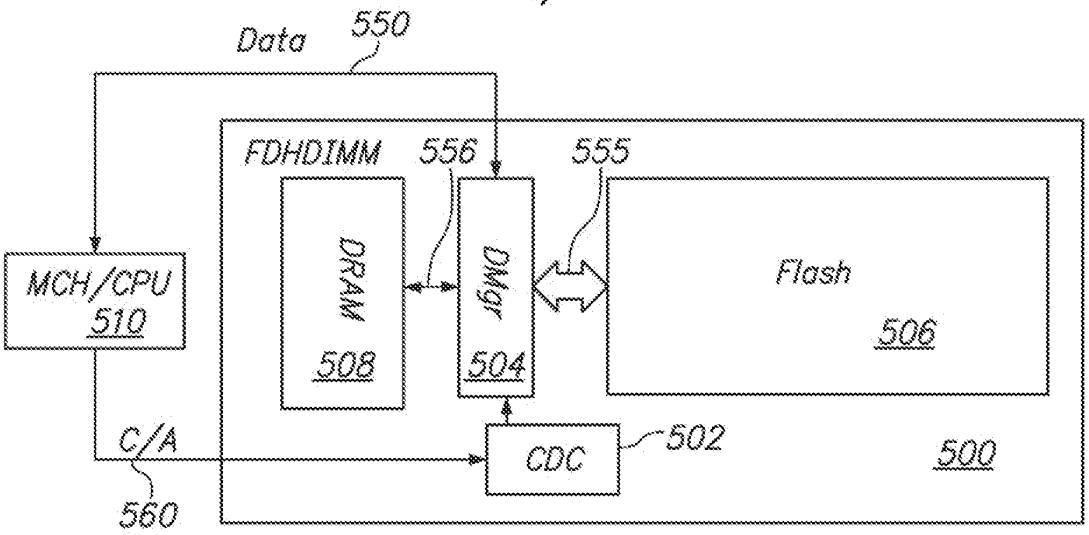
Data
550
FDHDIMM
556
555
DRAM
508
DMgr
504
Flash
506
MCH/CPU
510
C/A
560
CDC
502
500

FIG. 5A

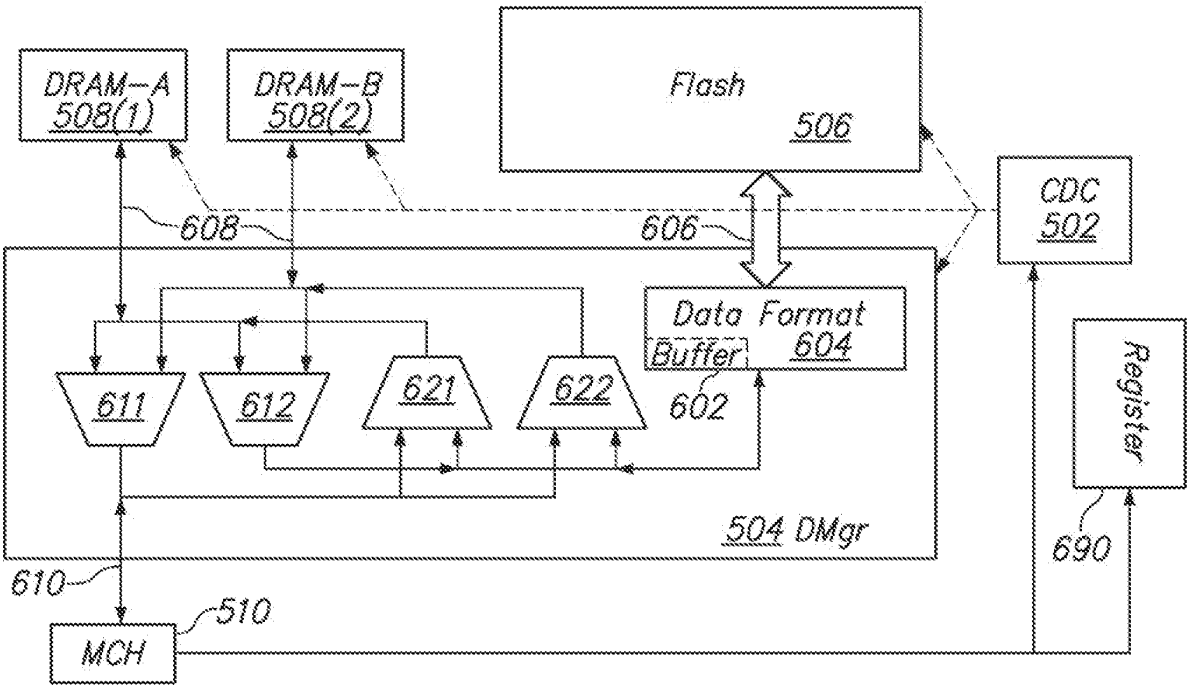
DRAM-A
508(1)
DRAM-B
508(2)
Flash
506
CDC
502
608
606
Data Format
604
Buffer
602
611
612
621
622
Register
690
504 DMgr
610
510
MCH

FIG. 6

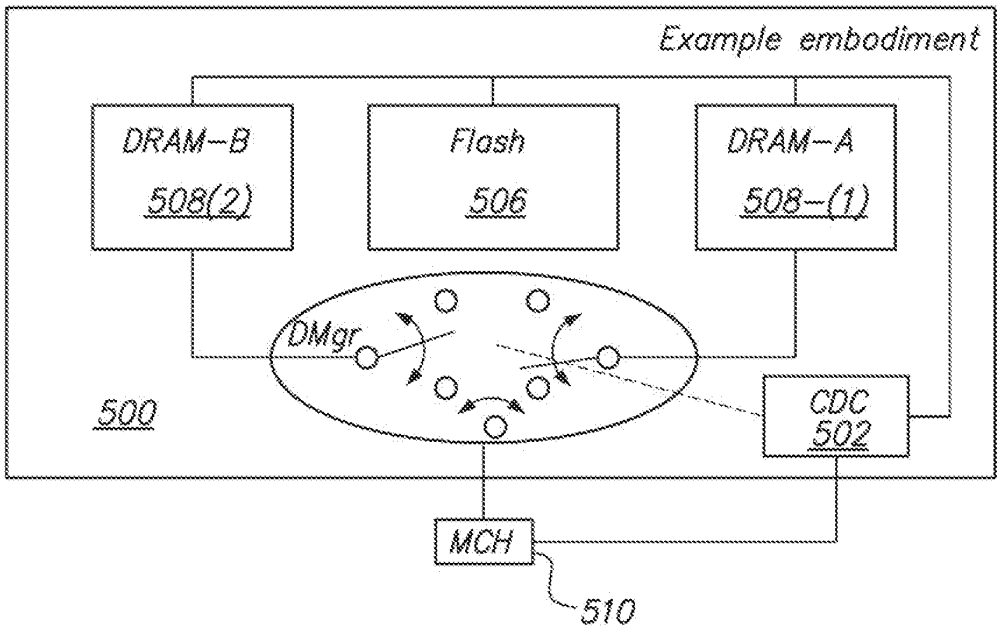
Example embodiment
DRAM–B
508(2)
Flash
506
DRAM–A
508–(1)
DMgr
500
CDC
502
MCH
510

FIG. 5B

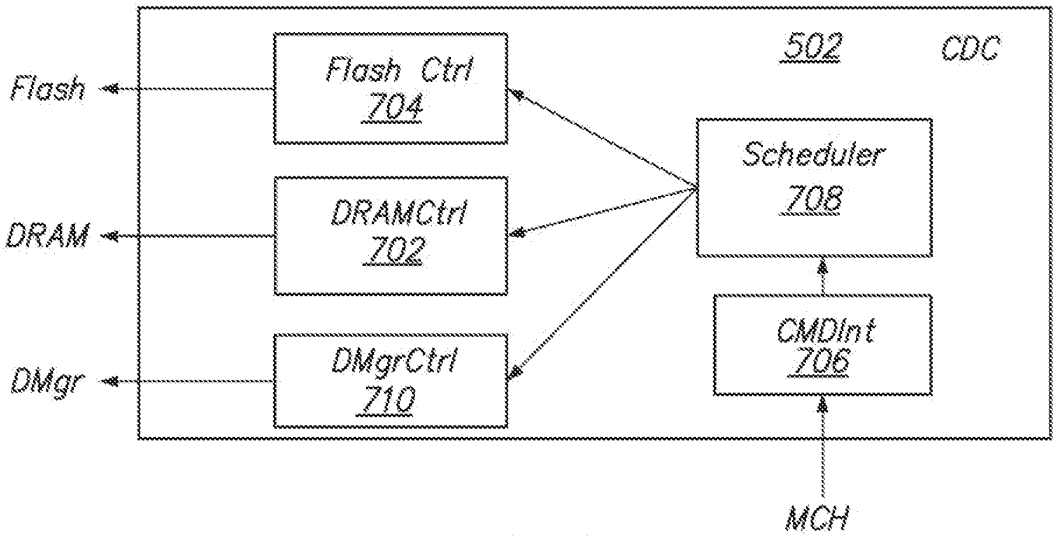
502
CDC
Flash
Flash Ctrl
704
DRAM
DRAMCtrl
702
DMgr
DMgrCtrl
710
Scheduler
708
CMDInt
706
MCH

FIG. 7

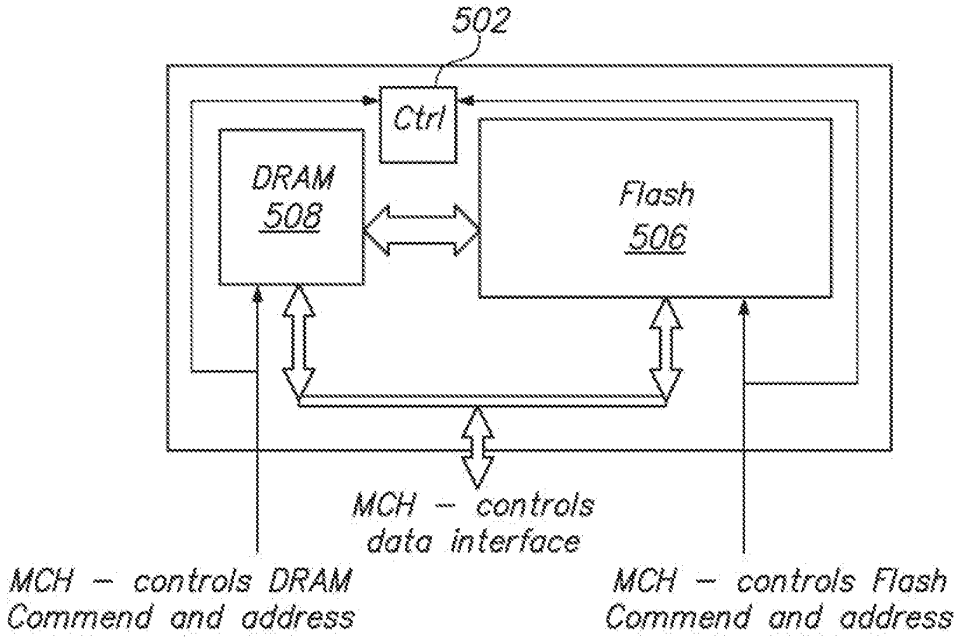
502
Ctrl
DRAM
508
Flash
506
MCH – controls
data interface
MCH – controls DRAM
Commend and address
MCH – controls Flash
Commend and address

FIG. 8A

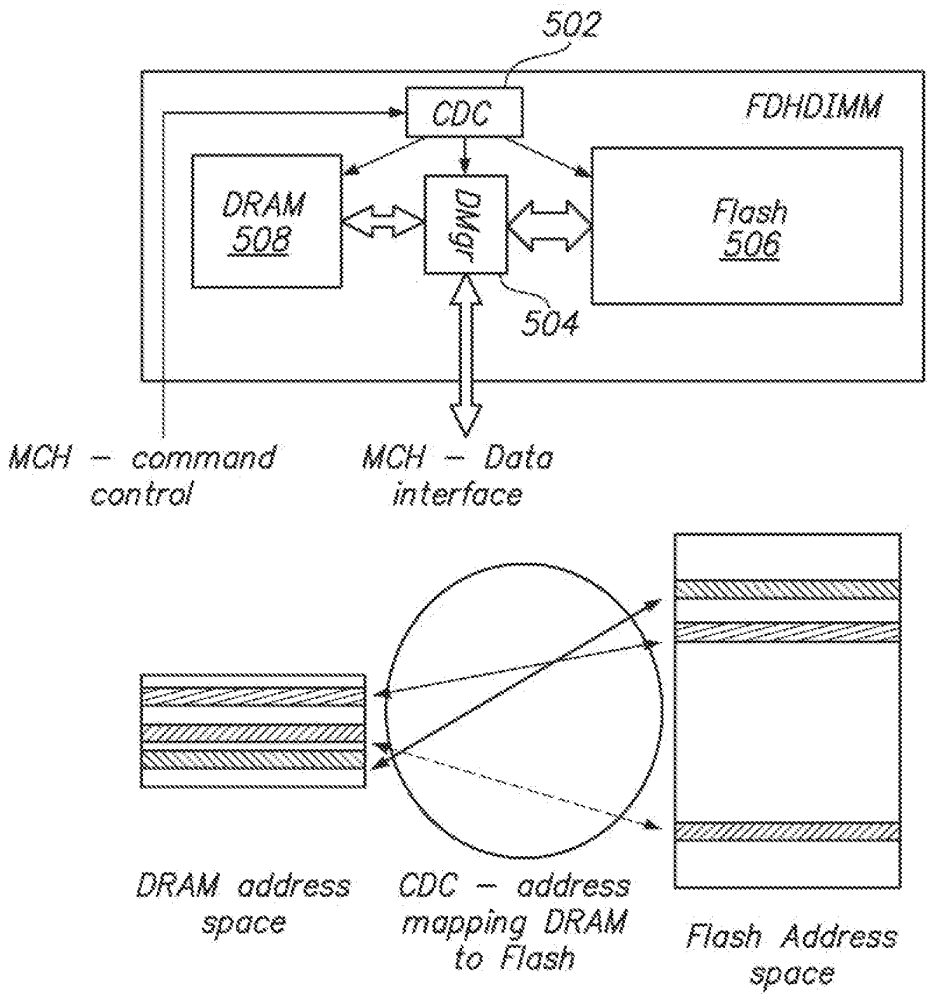
502
CDC
FDHDIMM
DRAM
508
DMGr
Flash
506
504
MCH – command control
MCH – Data interface
DRAM address space
CDC – address mapping DRAM to Flash
Flash Address space

FIG. 8B

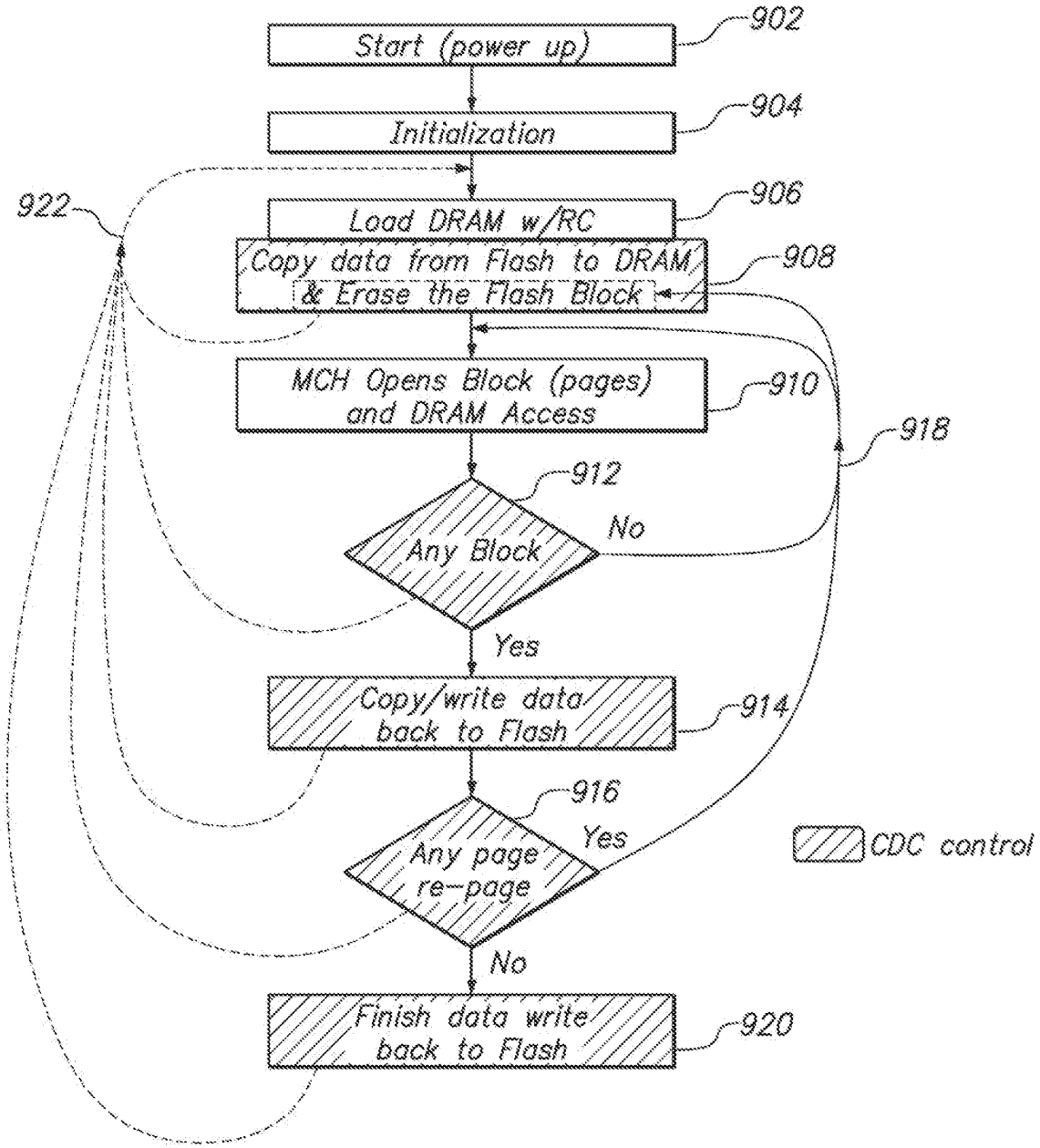
Start (power up)
902
Initialization
904
Load DRAM w/RC
906
Copy data from Flash to DRAM, & Erase the Flash Block
908
MCH Opens Block (pages) and DRAM Access
910
Any Block
912
No
Yes
Copy/write data back to Flash
914
Any page re-page
916
Yes
No
Finish data write back to Flash
920
922
918
CDC control

FIG. 9

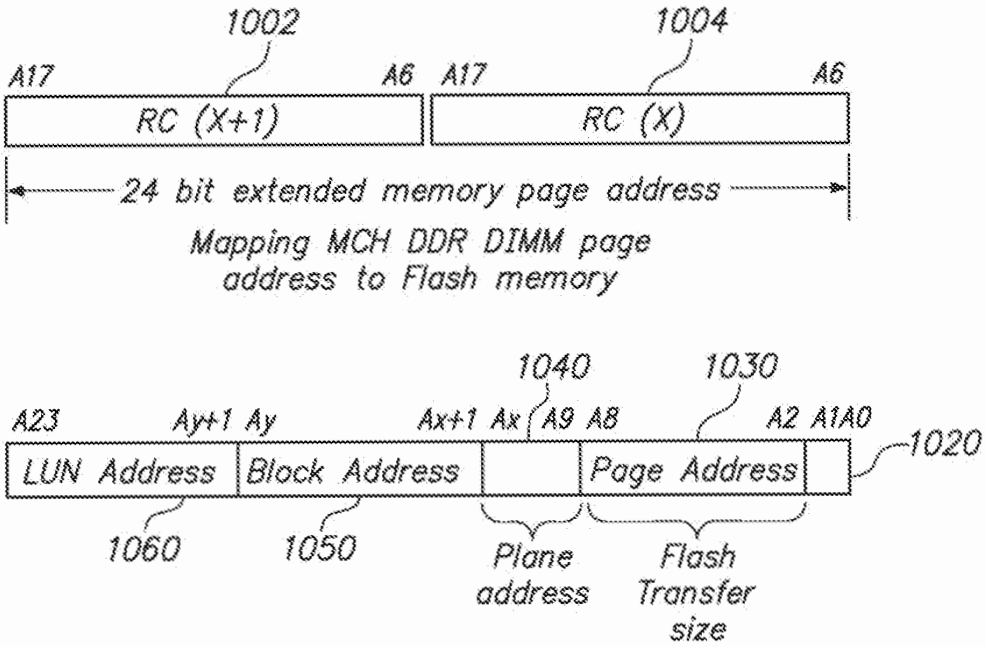
1002
1004
A17
A6
A17
A6
RC (X+1)
RC (X)
24 bit extended memory page address
Mapping MCH DDR DIMM page address to Flash memory
1040
1030
A23
Ay+1
Ay
Ax+1
Ax
A9
A8
A2
A1A0
1020
LUN Address
Block Address
Page Address
1060
1050
Plane address
Flash Transfer size

FIG. 10

DRAM density (GB)	# of blocks per bank	Flash wr-time to rd-time ratio	Avg block use time (sec)	Flash write time (sec)	Max allowed Closed Blk in queue to be written back to Flash
1	250	55	1.00E-03	2.00E-02	0
1	250	55	1.00E-02	2.00E-02	2
1	250	55	2.00E-02	2.00E-02	5
1	250	55	5.00E-02	2.00E-02	11
2	500	55	1.00E-03	2.00E-02	0
2	500	55	1.00E-02	2.00E-02	5
2	500	55	2.00E-02	2.00E-02	9
2	500	55	5.00E-02	2.00E-02	23
4	1000	55	1.00E-03	2.00E-02	1
4	1000	55	1.00E-02	2.00E-02	9
4	1000	55	2.00E-02	2.00E-02	18
4	1000	55	5.00E-02	2.00E-02	45

FIG. 11

PTO/AIA/01 (06-12)
Approved for use through 01/31/2014. OMB 0651-0032
U.S. Patent and Trademark Office; U.S. DEPARTMENT OF COMMERCE
Under the Paperwork Reduction Act of 1995, no persons are required to respond to a collection of information unless it displays a valid OMB control number.

DECLARATION (37 CFR 1.63) FOR UTILITY OR DESIGN APPLICATION USING AN APPLICATION DATA SHEET (37 CFR 1.76)

Title of Invention	FLASH-DRAM HYBRID MEMORY MODULE

As the below named inventor, I hereby declare that:

This declaration is directed to:

☐ The attached application, or

☒ United States application or PCT international application number 14/489269 filed on September 17, 2014.

The above-identified application was made or authorized to be made by me.

I believe that I am the original inventor or an original joint inventor of a claimed invention in the application.

I hereby acknowledge that any willful false statement made in this declaration is punishable under 18 U.S.C. 1001 by fine or imprisonment of not more than five (5) years, or both.

WARNING:

Petitioner/applicant is cautioned to avoid submitting personal information in documents filed in a patent application that may contribute to identity theft. Personal information such as social security numbers, bank account numbers, or credit card numbers (other than a check or credit card authorization form PTO-2038 submitted for payment purposes) is never required by the USPTO to support a petition or an application. If this type of personal information is included in documents submitted to the USPTO, petitioners/applicants should consider redacting such personal information from the documents before submitting them to the USPTO. Petitioner/applicant is advised that the record of a patent application is available to the public after publication of the application (unless a non-publication request in compliance with 37 CFR 1.213(a) is made in the application) or issuance of a patent. Furthermore, the record from an abandoned application may also be available to the public if the application is referenced in a published application or an issued patent (see 37 CFR 1.14). Checks and credit card authorization forms PTO-2038 submitted for payment purposes are not retained in the application file and therefore are not publicly available.

LEGAL NAME OF INVENTOR

Inventor: Jeffrey C. Solomon Date (Optional) :

Signature: Jeffrey C. Solomon

Note: An application data sheet (PTO/SB/14 or equivalent), including naming the entire inventive entity, must accompany this form or must have been previously filed. Use an additional PTO/AIA/01 form for each additional inventor.

This collection of information is required by 35 U.S.C. 115 and 37 CFR 1.63. The information is required to obtain or retain a benefit by the public which is to file (and by the USPTO to process) an application. Confidentiality is governed by 35 U.S.C. 122 and 37 CFR 1.11 and 1.14. This collection is estimated to take 1 minute to complete, including gathering, preparing, and submitting the completed application form to the USPTO. Time will vary depending upon the individual case. Any comments on the amount of time you require to complete this form and/or suggestions for reducing this burden, should be sent to the Chief Information Officer, U.S. Patent and Trademark Office, U.S. Department of Commerce, P.O. Box 1450, Alexandria, VA 22313-1450. DO NOT SEND FEES OR COMPLETED FORMS TO THIS ADDRESS. **SEND TO: Commissioner for Patents, P.O. Box 1450, Alexandria, VA 22313-1450.**

If you need assistance in completing the form, call 1-800-PTO-9199 and select option 2.

PTO/AIA/01 (06-12)
Approved for use through 01/31/2014. OMB 0651-0032
U.S. Patent and Trademark Office; U.S. DEPARTMENT OF COMMERCE
Under the Paperwork Reduction Act of 1995, no persons are required to respond to a collection of information unless it displays a valid OMB control number.

DECLARATION (37 CFR 1.63) FOR UTILITY OR DESIGN APPLICATION USING AN APPLICATION DATA SHEET (37 CFR 1.76)

Title of Invention: FLASH-DRAM HYBRID MEMORY MODULE

As the below named inventor, I hereby declare that:

This declaration is directed to:

☐ The attached application, or

☒ United States application or PCT international application number 14/489269 filed on September 17, 2014.

The above-identified application was made or authorized to be made by me.

I believe that I am the original inventor or an original joint inventor of a claimed invention in the application.

I hereby acknowledge that any willful false statement made in this declaration is punishable under 18 U.S.C. 1001 by fine or imprisonment of not more than five (5) years, or both.

WARNING:

Petitioner/applicant is cautioned to avoid submitting personal information in documents filed in a patent application that may contribute to identity theft. Personal information such as social security numbers, bank account numbers, or credit card numbers (other than a check or credit card authorization form PTO-2038 submitted for payment purposes) is never required by the USPTO to support a petition or an application. If this type of personal information is included in documents submitted to the USPTO, petitioners/applicants should consider redacting such personal information from the documents before submitting them to the USPTO. Petitioner/applicant is advised that the record of a patent application is available to the public after publication of the application (unless a non-publication request in compliance with 37 CFR 1.213(a) is made in the application) or issuance of a patent. Furthermore, the record from an abandoned application may also be available to the public if the application is referenced in a published application or an issued patent (see 37 CFR 1.14). Checks and credit card authorization forms PTO-2038 submitted for payment purposes are not retained in the application file and therefore are not publicly available.

LEGAL NAME OF INVENTOR

Inventor: Scott H. Milton Date (Optional): 10/17/2014

Signature: Scott H. Milton

Note: An application data sheet (PTO/SB/14 or equivalent), including naming the entire inventive entity, must accompany this form or must have been previously filed. Use an additional PTO/AIA/01 form for each additional inventor.

This collection of information is required by 35 U.S.C. 115 and 37 CFR 1.63. The information is required to obtain or retain a benefit by the public which is to file (and by the USPTO to process) an application. Confidentiality is governed by 35 U.S.C. 122 and 37 CFR 1.11 and 1.14. This collection is estimated to take 1 minute to complete, including gathering, preparing, and submitting the completed application form to the USPTO. Time will vary depending upon the individual case. Any comments on the amount of time you require to complete this form and/or suggestions for reducing this burden, should be sent to the Chief Information Officer, U.S. Patent and Trademark Office, U.S. Department of Commerce, P.O. Box 1450, Alexandria, VA 22313-1450. DO NOT SEND FEES OR COMPLETED FORMS TO THIS ADDRESS. **SEND TO: Commissioner for Patents, P.O. Box 1450, Alexandria, VA 22313-1450.**

If you need assistance in completing the form, call 1-800-PTO-9199 and select option 2.

PTO/AIA/01 (06-12)
Approved for use through 01/31/2014. OMB 0651-0032
U.S. Patent and Trademark Office; U.S. DEPARTMENT OF COMMERCE
Under the Paperwork Reduction Act of 1995, no persons are required to respond to a collection of information unless it displays a valid OMB control number.

DECLARATION (37 CFR 1.63) FOR UTILITY OR DESIGN APPLICATION USING AN APPLICATION DATA SHEET (37 CFR 1.76)

Title of Invention	FLASH-DRAM HYBRID MEMORY MODULE

As the below named inventor, I hereby declare that:

This declaration is directed to:

☐ The attached application, or

☒ United States application or PCT international application number 14/489269 filed on September 17, 2014.

The above-identified application was made or authorized to be made by me.

I believe that I am the original inventor or an original joint inventor of a claimed invention in the application.

I hereby acknowledge that any willful false statement made in this declaration is punishable under 18 U.S.C. 1001 by fine or imprisonment of not more than five (5) years, or both.

WARNING:

Petitioner/applicant is cautioned to avoid submitting personal information in documents filed in a patent application that may contribute to identity theft. Personal information such as social security numbers, bank account numbers, or credit card numbers (other than a check or credit card authorization form PTO-2038 submitted for payment purposes) is never required by the USPTO to support a petition or an application. If this type of personal information is included in documents submitted to the USPTO, petitioners/applicants should consider redacting such personal information from the documents before submitting them to the USPTO. Petitioner/applicant is advised that the record of a patent application is available to the public after publication of the application (unless a non-publication request in compliance with 37 CFR 1.213(a) is made in the application) or issuance of a patent. Furthermore, the record from an abandoned application may also be available to the public if the application is referenced in a published application or an issued patent (see 37 CFR 1.14). Checks and credit card authorization forms PTO-2038 submitted for payment purposes are not retained in the application file and therefore are not publicly available.

LEGAL NAME OF INVENTOR

Inventor: Hyun Lee Date (Optional) :

Signature:

Note: An application data sheet (PTO/SB/14 or equivalent), including naming the entire inventive entity, must accompany this form or must have been previously filed. Use an additional PTO/AIA/01 form for each additional inventor.

This collection of information is required by 35 U.S.C. 115 and 37 CFR 1.63. The information is required to obtain or retain a benefit by the public which is to file (and by the USPTO to process) an application. Confidentiality is governed by 35 U.S.C. 122 and 37 CFR 1.11 and 1.14. This collection is estimated to take 1 minute to complete, including gathering, preparing, and submitting the completed application form to the USPTO. Time will vary depending upon the individual case. Any comments on the amount of time you require to complete this form and/or suggestions for reducing this burden, should be sent to the Chief Information Officer, U.S. Patent and Trademark Office, U.S. Department of Commerce, P.O. Box 1450, Alexandria, VA 22313-1450. DO NOT SEND FEES OR COMPLETED FORMS TO THIS ADDRESS. **SEND TO: Commissioner for Patents, P.O. Box 1450, Alexandria, VA 22313-1450.**

If you need assistance in completing the form, call 1-800-PTO-9199 and select option 2.

PTO/AIA/01 (06-12)
Approved for use through 01/31/2014. OMB 0651-0032
U.S. Patent and Trademark Office; U.S. DEPARTMENT OF COMMERCE
Under the Paperwork Reduction Act of 1995, no persons are required to respond to a collection of information unless it displays a valid OMB control number.

DECLARATION (37 CFR 1.63) FOR UTILITY OR DESIGN APPLICATION USING AN APPLICATION DATA SHEET (37 CFR 1.76)

Title of Invention	FLASH-DRAM HYBRID MEMORY MODULE

As the below named inventor, I hereby declare that:

This declaration is directed to:

☐ The attached application, or

☒ United States application or PCT international application number 14/489269 filed on September 17, 2014.

The above-identified application was made or authorized to be made by me.

I believe that I am the original inventor or an original joint inventor of a claimed invention in the application.

I hereby acknowledge that any willful false statement made in this declaration is punishable under 18 U.S.C. 1001 by fine or imprisonment of not more than five (5) years, or both.

WARNING:

Petitioner/applicant is cautioned to avoid submitting personal information in documents filed in a patent application that may contribute to identity theft. Personal information such as social security numbers, bank account numbers, or credit card numbers (other than a check or credit card authorization form PTO-2038 submitted for payment purposes) is never required by the USPTO to support a petition or an application. If this type of personal information is included in documents submitted to the USPTO, petitioners/applicants should consider redacting such personal information from the documents before submitting them to the USPTO. Petitioner/applicant is advised that the record of a patent application is available to the public after publication of the application (unless a non-publication request in compliance with 37 CFR 1.213(a) is made in the application) or issuance of a patent. Furthermore, the record from an abandoned application may also be available to the public if the application is referenced in a published application or an issued patent (see 37 CFR 1.14). Checks and credit card authorization forms PTO-2038 submitted for payment purposes are not retained in the application file and therefore are not publicly available.

LEGAL NAME OF INVENTOR

Inventor: Jayesh Bhakta Date (Optional): 9-17-2014

Signature: Jayesh Bhakta

Note: An application data sheet (PTO/SB/14 or equivalent), including naming the entire inventive entity, must accompany this form or must have been previously filed. Use an additional PTO/AIA/01 form for each additional inventor.

This collection of information is required by 35 U.S.C. 115 and 37 CFR 1.63. The information is required to obtain or retain a benefit by the public which is to file (and by the USPTO to process) an application. Confidentiality is governed by 35 U.S.C. 122 and 37 CFR 1.11 and 1.14. This collection is estimated to take 1 minute to complete, including gathering, preparing, and submitting the completed application form to the USPTO. Time will vary depending upon the individual case. Any comments on the amount of time you require to complete this form and/or suggestions for reducing this burden, should be sent to the Chief Information Officer, U.S. Patent and Trademark Office, U.S. Department of Commerce, P.O. Box 1450, Alexandria, VA 22313-1450. DO NOT SEND FEES OR COMPLETED FORMS TO THIS ADDRESS. **SEND TO: Commissioner for Patents, P.O. Box 1450, Alexandria, VA 22313-1450.**

If you need assistance in completing the form, call 1-800-PTO-9199 and select option 2.

PTO/AIA/01 (06-12)
Approved for use through 01/31/2014. OMB 0651-0032
U.S. Patent and Trademark Office; U.S. DEPARTMENT OF COMMERCE
Under the Paperwork Reduction Act of 1995, no persons are required to respond to a collection of information unless it displays a valid OMB control number.

DECLARATION (37 CFR 1.63) FOR UTILITY OR DESIGN APPLICATION USING AN APPLICATION DATA SHEET (37 CFR 1.76)

Title of Invention	FLASH-DRAM HYBRID MEMORY MODULE

As the below named inventor, I hereby declare that:

This declaration is directed to:

☐ The attached application, or

☒ United States application or PCT international application number 14/489269 filed on September 17, 2014.

The above-identified application was made or authorized to be made by me.

I believe that I am the original inventor or an original joint inventor of a claimed invention in the application.

I hereby acknowledge that any willful false statement made in this declaration is punishable under 18 U.S.C. 1001 by fine or imprisonment of not more than five (5) years, or both.

WARNING:

Petitioner/applicant is cautioned to avoid submitting personal information in documents filed in a patent application that may contribute to identity theft. Personal information such as social security numbers, bank account numbers, or credit card numbers (other than a check or credit card authorization form PTO-2038 submitted for payment purposes) is never required by the USPTO to support a petition or an application. If this type of personal information is included in documents submitted to the USPTO, petitioners/applicants should consider redacting such personal information from the documents before submitting them to the USPTO. Petitioner/applicant is advised that the record of a patent application is available to the public after publication of the application (unless a non-publication request in compliance with 37 CFR 1.213(a) is made in the application) or issuance of a patent. Furthermore, the record from an abandoned application may also be available to the public if the application is referenced in a published application or an issued patent (see 37 CFR 1.14). Checks and credit card authorization forms PTO-2038 submitted for payment purposes are not retained in the application file and therefore are not publicly available.

LEGAL NAME OF INVENTOR

Inventor: Chi-She Chen Date (Optional): Oct-17-2014

Signature: Chi-She Chen

Note: An application data sheet (PTO/SB/14 or equivalent), including naming the entire inventive entity, must accompany this form or must have been previously filed. Use an additional PTO/AIA/01 form for each additional inventor.

This collection of information is required by 35 U.S.C. 115 and 37 CFR 1.63. The information is required to obtain or retain a benefit by the public which is to file (and by the USPTO to process) an application. Confidentiality is governed by 35 U.S.C. 122 and 37 CFR 1.11 and 1.14. This collection is estimated to take 1 minute to complete, including gathering, preparing, and submitting the completed application form to the USPTO. Time will vary depending upon the individual case. Any comments on the amount of time you require to complete this form and/or suggestions for reducing this burden, should be sent to the Chief Information Officer, U.S. Patent and Trademark Office, U.S. Department of Commerce, P.O. Box 1450, Alexandria, VA 22313-1450. DO NOT SEND FEES OR COMPLETED FORMS TO THIS ADDRESS. **SEND TO: Commissioner for Patents, P.O. Box 1450, Alexandria, VA 22313-1450.**

If you need assistance in completing the form, call 1-800-PTO-9199 and select option 2.

PATENT APPLICATION FEE DETERMINATION RECORD Substitute for Form PTO-875	Application or Docket Number 14/840,865

APPLICATION AS FILED - PART I

FOR	(Column 1) NUMBER FILED	(Column 2) NUMBER EXTRA	SMALL ENTITY RATE($)	SMALL ENTITY FEE($)	OR	OTHER THAN SMALL ENTITY RATE($)	OTHER THAN SMALL ENTITY FEE($)
BASIC FEE (37 CFR 1.16(a), (b), or (c))	N/A	N/A	N/A	70		N/A	
SEARCH FEE (37 CFR 1.16(k), (i), or (m))	N/A	N/A	N/A	300		N/A	
EXAMINATION FEE (37 CFR 1.16(o), (p), or (q))	N/A	N/A	N/A	360		N/A	
TOTAL CLAIMS (37 CFR 1.16(i))	1 minus 20 =	*	x 40 =	0.00	OR		
INDEPENDENT CLAIMS (37 CFR 1.16(h))	1 minus 3 =	*	x 210 =	0.00			
APPLICATION SIZE FEE (37 CFR 1.16(s))	If the specification and drawings exceed 100 sheets of paper, the application size fee due is $310 ($155 for small entity) for each additional 50 sheets or fraction thereof. See 35 U.S.C. 41(a)(1)(G) and 37 CFR 1.16(s).			0.00			
MULTIPLE DEPENDENT CLAIM PRESENT (37 CFR 1.16(j))				0.00			
* If the difference in column 1 is less than zero, enter "0" in column 2.			TOTAL	730		TOTAL	

APPLICATION AS AMENDED - PART II

		(Column 1) CLAIMS REMAINING AFTER AMENDMENT		(Column 2) HIGHEST NUMBER PREVIOUSLY PAID FOR	(Column 3) PRESENT EXTRA	SMALL ENTITY RATE($)	SMALL ENTITY ADDITIONAL FEE($)	OR	OTHER THAN SMALL ENTITY RATE($)	OTHER THAN SMALL ENTITY ADDITIONAL FEE($)
AMENDMENT A	Total (37 CFR 1.16(i))	*	Minus	**	=	x =		OR	x =	
AMENDMENT A	Independent (37 CFR 1.16(h))	*	Minus	***	=	x =		OR	x =	
AMENDMENT A	Application Size Fee (37 CFR 1.16(s))									
AMENDMENT A	FIRST PRESENTATION OF MULTIPLE DEPENDENT CLAIM (37 CFR 1.16(j))							OR		
						TOTAL ADD'L FEE		OR	TOTAL ADD'L FEE	

		(Column 1) CLAIMS REMAINING AFTER AMENDMENT		(Column 2) HIGHEST NUMBER PREVIOUSLY PAID FOR	(Column 3) PRESENT EXTRA	RATE($)	ADDITIONAL FEE($)		RATE($)	ADDITIONAL FEE($)
AMENDMENT B	Total (37 CFR 1.16(i))	*	Minus	**	=	x =		OR	x =	
AMENDMENT B	Independent (37 CFR 1.16(h))	*	Minus	***	=	x =		OR	x =	
AMENDMENT B	Application Size Fee (37 CFR 1.16(s))									
AMENDMENT B	FIRST PRESENTATION OF MULTIPLE DEPENDENT CLAIM (37 CFR 1.16(j))							OR		
						TOTAL ADD'L FEE		OR	TOTAL ADD'L FEE	

* If the entry in column 1 is less than the entry in column 2, write "0" in column 3.
** If the "Highest Number Previously Paid For" IN THIS SPACE is less than 20, enter "20".
*** If the "Highest Number Previously Paid For" IN THIS SPACE is less than 3, enter "3".
The "Highest Number Previously Paid For" (Total or Independent) is the highest found in the appropriate box in column 1.

UNITED STATES PATENT AND TRADEMARK OFFICE

UNITED STATES DEPARTMENT OF COMMERCE
United States Patent and Trademark Office
Address: COMMISSIONER FOR PATENTS
P.O. Box 1450
Alexandria, Virginia 22313-1450
www.uspto.gov

APPLICATION NUMBER	FILING or 371(c) DATE	GRP ART UNIT	FIL FEE REC'D	ATTY.DOCKET.NO	TOT CLAIMS	IND CLAIMS
14/840,865	08/31/2015	2139	0.00	062453-036	1	1

CONFIRMATION NO. 2445

FILING RECEIPT

22204
NIXON PEABODY, LLP
799 Ninth Street, NW
SUITE 500
WASHINGTON, DC 20001

OC000000077430465

Date Mailed: 09/16/2015

Receipt is acknowledged of this non-provisional patent application. The application will be taken up for examination in due course. Applicant will be notified as to the results of the examination. Any correspondence concerning the application must include the following identification information: the U.S. APPLICATION NUMBER, FILING DATE, NAME OF APPLICANT, and TITLE OF INVENTION. Fees transmitted by check or draft are subject to collection. Please verify the accuracy of the data presented on this receipt. **If an error is noted on this Filing Receipt, please submit a written request for a Filing Receipt Correction. Please provide a copy of this Filing Receipt with the changes noted thereon. If you received a "Notice to File Missing Parts" for this application, please submit any corrections to this Filing Receipt with your reply to the Notice. When the USPTO processes the reply to the Notice, the USPTO will generate another Filing Receipt incorporating the requested corrections**

Inventor(s)

Hyun Lee, Ladera Ranch, CA;
Chi-She Chen, Walnut, CA;
Jeffrey C. Solomon, Irvine, CA;
Scott H. Milton, Irvine, CA;
Jayesh Bhakta, Cerritos, CA;

Applicant(s)

Netlist, Inc., Irvine, CA;

Power of Attorney: None

Domestic Priority data as claimed by applicant

This application is a CON of 14/489,269 09/17/2014
which is a CON of 13/559,476 07/26/2012 PAT 8874831
which claims benefit of 61/512,871 07/28/2011
and is a CIP of 12/240,916 09/29/2008 PAT 8301833
which is a CON of 12/131,873 06/02/2008 ABN
which claims benefit of 60/941,586 06/01/2007

Foreign Applications for which priority is claimed (You may be eligible to benefit from the **Patent Prosecution Highway** program at the USPTO. Please see http://www.uspto.gov for more information.) - None.
Foreign application information must be provided in an Application Data Sheet in order to constitute a claim to foreign priority. See 37 CFR 1.55 and 1.76.

Permission to Access - A proper **Authorization to Permit Access to Application by Participating Offices** (PTO/SB/39 or its equivalent) has been received by the USPTO.

If Required, Foreign Filing License Granted: 09/14/2015

The country code and number of your priority application, to be used for filing abroad under the Paris Convention, is **US 14/840,865**

Projected Publication Date: To Be Determined - pending completion of Missing Parts

Non-Publication Request: No

Early Publication Request: No
**** SMALL ENTITY ****
Title

FLASH-DRAM HYBRID MEMORY MODULE

Preliminary Class

711

Statement under 37 CFR 1.55 or 1.78 for AIA (First Inventor to File) Transition Applications: No

PROTECTING YOUR INVENTION OUTSIDE THE UNITED STATES

Since the rights granted by a U.S. patent extend only throughout the territory of the United States and have no effect in a foreign country, an inventor who wishes patent protection in another country must apply for a patent in a specific country or in regional patent offices. Applicants may wish to consider the filing of an international application under the Patent Cooperation Treaty (PCT). An international (PCT) application generally has the same effect as a regular national patent application in each PCT-member country. The PCT process **simplifies** the filing of patent applications on the same invention in member countries, but **does not result** in a grant of "an international patent" and does not eliminate the need of applicants to file additional documents and fees in countries where patent protection is desired.

Almost every country has its own patent law, and a person desiring a patent in a particular country must make an application for patent in that country in accordance with its particular laws. Since the laws of many countries differ in various respects from the patent law of the United States, applicants are advised to seek guidance from specific foreign countries to ensure that patent rights are not lost prematurely.

Applicants also are advised that in the case of inventions made in the United States, the Director of the USPTO must issue a license before applicants can apply for a patent in a foreign country. The filing of a U.S. patent application serves as a request for a foreign filing license. The application's filing receipt contains further information and guidance as to the status of applicant's license for foreign filing.

Applicants may wish to consult the USPTO booklet, "General Information Concerning Patents" (specifically, the section entitled "Treaties and Foreign Patents") for more information on timeframes and deadlines for filing foreign patent applications. The guide is available either by contacting the USPTO Contact Center at 800-786-9199, or it can be viewed on the USPTO website at http://www.uspto.gov/web/offices/pac/doc/general/index.html.

For information on preventing theft of your intellectual property (patents, trademarks and copyrights), you may wish to consult the U.S. Government website, http://www.stopfakes.gov. Part of a Department of Commerce initiative, this website includes self-help "toolkits" giving innovators guidance on how to protect intellectual property in specific countries such as China, Korea and Mexico. For questions regarding patent enforcement issues, applicants may call the U.S. Government hotline at 1-866-999-HALT (1-866-999-4258).

LICENSE FOR FOREIGN FILING UNDER

Title 35, United States Code, Section 184

Title 37, Code of Federal Regulations, 5.11 & 5.15

GRANTED

The applicant has been granted a license under 35 U.S.C. 184, if the phrase "IF REQUIRED, FOREIGN FILING LICENSE GRANTED" followed by a date appears on this form. Such licenses are issued in all applications where the conditions for issuance of a license have been met, regardless of whether or not a license may be required as set forth in 37 CFR 5.15. The scope and limitations of this license are set forth in 37 CFR 5.15(a) unless an earlier license has been issued under 37 CFR 5.15(b). The license is subject to revocation upon written notification. The date indicated is the effective date of the license, unless an earlier license of similar scope has been granted under 37 CFR 5.13 or 5.14.

This license is to be retained by the licensee and may be used at any time on or after the effective date thereof unless it is revoked. This license is automatically transferred to any related applications(s) filed under 37 CFR 1.53(d). This license is not retroactive.

The grant of a license does not in any way lessen the responsibility of a licensee for the security of the subject matter as imposed by any Government contract or the provisions of existing laws relating to espionage and the national security or the export of technical data. Licensees should apprise themselves of current regulations especially with respect to certain countries, of other agencies, particularly the Office of Defense Trade Controls, Department of State (with respect to Arms, Munitions and Implements of War (22 CFR 121-128)); the Bureau of Industry and Security, Department of Commerce (15 CFR parts 730-774); the Office of Foreign AssetsControl, Department of Treasury (31 CFR Parts 500+) and the Department of Energy.

NOT GRANTED

No license under 35 U.S.C. 184 has been granted at this time, if the phrase "IF REQUIRED, FOREIGN FILING LICENSE GRANTED" DOES NOT appear on this form. Applicant may still petition for a license under 37 CFR 5.12, if a license is desired before the expiration of 6 months from the filing date of the application. If 6 months has lapsed from the filing date of this application and the licensee has not received any indication of a secrecy order under 35 U.S.C. 181, the licensee may foreign file the application pursuant to 37 CFR 5.15(b).

SelectUSA

The United States represents the largest, most dynamic marketplace in the world and is an unparalleled location for business investment, innovation, and commercialization of new technologies. The U.S. offers tremendous resources and advantages for those who invest and manufacture goods here. Through SelectUSA, our nation works to promote and facilitate business investment. SelectUSA provides information assistance to the international investor community; serves as an ombudsman for existing and potential investors; advocates on behalf of U.S. cities, states, and regions competing for global investment; and counsels U.S. economic development organizations on investment attraction best practices. To learn more about why the United States is the best country in the world to develop technology, manufacture products, deliver services, and grow your business, visit http://www.SelectUSA.gov or call +1-202-482-6800.

UNITED STATES PATENT AND TRADEMARK OFFICE

UNITED STATES DEPARTMENT OF COMMERCE
United States Patent and Trademark Office
Address: COMMISSIONER FOR PATENTS
P.O. Box 1450
Alexandria, Virginia 22313-1450
www.uspto.gov

APPLICATION NUMBER	FILING OR 371(C) DATE	FIRST NAMED APPLICANT	ATTY. DOCKET NO./TITLE
14/840,865	08/31/2015	Hyun Lee	062453-036

CONFIRMATION NO. 2445

FORMALITIES LETTER

22204
NIXON PEABODY, LLP
799 Ninth Street, NW
SUITE 500
WASHINGTON, DC 20001

OC000000077430466

Date Mailed: 09/16/2015

NOTICE TO FILE MISSING PARTS OF NONPROVISIONAL APPLICATION

FILED UNDER 37 CFR 1.53(b)

Filing Date Granted

Items Required To Avoid Abandonment:

An application number and filing date have been accorded to this application. The item(s) indicated below, however, are missing. Applicant is given **TWO MONTHS** from the date of this Notice within which to file all required items below to avoid abandonment. Extensions of time may be obtained by filing a petition accompanied by the extension fee under the provisions of 37 CFR 1.136(a).

- The statutory basic filing fee is missing.
- The application search fee must be submitted.
- The application examination fee must be submitted.
- Surcharge as set forth in 37 CFR 1.16(f) must be submitted.
  The surcharge is due for any one of:
  - late submission of the basic filing fee, search fee, or examination fee,
  - late submission of inventor's oath or declaration,
  - filing an application that does not contain at least one claim on filing, or
  - submission of an application filed by reference to a previously filed application.

SUMMARY OF FEES DUE:

The fee(s) required within **TWO MONTHS** from the date of this Notice to avoid abandonment is/are itemized below. Small entity discount is in effect. If applicant is qualified for micro entity status, an acceptable Certification of Micro Entity Status must be submitted to establish micro entity status. (See 37 CFR 1.29 and forms PTO/SB/15A and 15B.)

- $ **70** basic filing fee.
- $ **70** surcharge.
- $ **300** search fee.
- $ **360** examination fee.
- $(**0**) previous unapplied payment amount.
- $ **800** TOTAL FEE BALANCE DUE.

Samsung Electronics Co., Ltd.
Ex. 1011, p. 85

Replies must be received in the USPTO within the set time period or must include a proper Certificate of Mailing or Transmission under 37 CFR 1.8 with a mailing or transmission date within the set time period. For more information and a suggested format, see Form PTO/SB/92 and MPEP 512.

Replies should be mailed to:

Mail Stop Missing Parts
Commissioner for Patents
P.O. Box 1450
Alexandria VA 22313-1450

Registered users of EFS-Web may alternatively submit their reply to this notice via EFS-Web, including a copy of this Notice and selecting the document description "Applicant response to Pre-Exam Formalities Notice". https://sportal.uspto.gov/authenticate/AuthenticateUserLocalEPF.html

For more information about EFS-Web please call the USPTO Electronic Business Center at 1-866-217-9197 or visit our website at http://www.uspto.gov/ebc.

If you are not using EFS-Web to submit your reply, you must include a copy of this notice.

Questions about the contents of this notice and the requirements it sets forth should be directed to the Office of Data Management, Application Assistance Unit, at **(571) 272-4000** or **(571) 272-4200** or **1-888-786-0101**.

/kxaysana/

IN THE UNITED STATES PATENT AND TRADEMARK OFFICE

APPLICANT:	Hyun LEE	CONFIRMATION NO.: 2445
APPLICATION NO.:	14/840,865	
FILING DATE:	August 31, 2015	
TITLE:	FLASH-DRAM HYBRID MEMORY MODULE	
EXAMINER:	NOT ASSIGNED	
ART UNIT:	2139	

Mail Stop Missing Parts
Commissioner for Patents
P.O. Box 1450
Alexandria, VA 22313-1450

RESPONSE TO NOTICE TO FILE MISSING PARTS

Sir:

In response to the Notice to File Missing Parts of Nonprovisional Application, mailed September 16, 2015, Applicant submits the following fees:

Basic Filing Fee	$ 280.00
Surcharge	$ 140.00
Search Fee	$ 600.00
Examination Fee	$ 720.00
Four Months Extension	$2,200.00
TOTAL	$3,940.00

Please charge any additional required fees or credit any overpayment not otherwise credited, to our Deposit Account No. 19-2380.

Respectfully submitted,

NIXON PEABODY LLP

Dated: March 16, 2016

/Khaled Shami/
Khaled Shami
Reg. No. 38,745

NIXON PEABODY LLP
799 9TH STREET, N.W., SUITE 500
WASHINGTON, D.C. 20001-4501
TEL: 202-585-8000
FAX: 202-585-8080

Electronic Patent Application Fee Transmittal

Application Number:	14840865
Filing Date:	31-Aug-2015
Title of Invention:	FLASH-DRAM HYBRID MEMORY MODULE
First Named Inventor/Applicant Name:	Hyun Lee
Filer:	Khaled Shami/Sheila M. Mattingly
Attorney Docket Number:	062453-036

Filed as Large Entity

Filing Fees for Utility under 35 USC 111(a)

Description	Fee Code	Quantity	Amount	Sub-Total in USD($)
Basic Filing:				
Utility application filing	1011	1	280	280
Utility Search Fee	1111	1	600	600
Utility Examination Fee	1311	1	720	720
Pages:				
Claims:				
Miscellaneous-Filing:				
Late Filing Fee for Oath or Declaration	1051	1	140	140
Petition:				

Description	Fee Code	Quantity	Amount	Sub-Total in USD($)
Patent-Appeals-and-Interference:				
Post-Allowance-and-Post-Issuance:				
Extension-of-Time:				
Extension - 4 months with $0 paid	1254	1	2200	2200
Miscellaneous:				
		Total in USD ($)		**3940**

Electronic Acknowledgement Receipt

EFS ID:	25216000
Application Number:	14840865
International Application Number:	
Confirmation Number:	2445
Title of Invention:	FLASH-DRAM HYBRID MEMORY MODULE
First Named Inventor/Applicant Name:	Hyun Lee
Customer Number:	22204
Filer:	Khaled Shami/Sheila M. Mattingly
Filer Authorized By:	Khaled Shami
Attorney Docket Number:	062453-036
Receipt Date:	16-MAR-2016
Filing Date:	31-AUG-2015
Time Stamp:	16:08:52
Application Type:	Utility under 35 USC 111(a)

Payment information:

Submitted with Payment	yes
Payment Type	Deposit Account
Payment was successfully received in RAM	$3940
RAM confirmation Number	2879
Deposit Account	502686
Authorized User	COSTELLIA, JEFF
The Director of the USPTO is hereby authorized to charge indicated fees and credit any overpayment as follows:	

Charge any Additional Fees required under 37 CFR 1.21 (Miscellaneous fees and charges)

File Listing:

Document Number	Document Description	File Name	File Size(Bytes)/ Message Digest	Multi Part /.zip	Pages (if appl.)
1	Applicant Response to Pre-Exam Formalities Notice	062453_036_Response_to_Missing_Parts.pdf	54944 fdfead67040d793636ab69eb4e03e64f07130e06	no	2
Warnings:					
The page size in the PDF is too large. The pages should be 8.5 x 11 or A4. If this PDF is submitted, the pages will be resized upon entry into the Image File Wrapper and may affect subsequent processing					
Information:					
2	Fee Worksheet (SB06)	fee-info.pdf	38624 63291843d0dde33baa084ea20807c9f9f62a8889	no	2
Warnings:					
Information:					
		Total Files Size (in bytes):	93568		

This Acknowledgement Receipt evidences receipt on the noted date by the USPTO of the indicated documents, characterized by the applicant, and including page counts, where applicable. It serves as evidence of receipt similar to a Post Card, as described in MPEP 503.

New Applications Under 35 U.S.C. 111
If a new application is being filed and the application includes the necessary components for a filing date (see 37 CFR 1.53(b)-(d) and MPEP 506), a Filing Receipt (37 CFR 1.54) will be issued in due course and the date shown on this Acknowledgement Receipt will establish the filing date of the application.

National Stage of an International Application under 35 U.S.C. 371
If a timely submission to enter the national stage of an international application is compliant with the conditions of 35 U.S.C. 371 and other applicable requirements a Form PCT/DO/EO/903 indicating acceptance of the application as a national stage submission under 35 U.S.C. 371 will be issued in addition to the Filing Receipt, in due course.

New International Application Filed with the USPTO as a Receiving Office
If a new international application is being filed and the international application includes the necessary components for an international filing date (see PCT Article 11 and MPEP 1810), a Notification of the International Application Number and of the International Filing Date (Form PCT/RO/105) will be issued in due course, subject to prescriptions concerning national security, and the date shown on this Acknowledgement Receipt will establish the international filing date of the application.

PATENT APPLICATION FEE DETERMINATION RECORD Substitute for Form PTO-875	Application or Docket Number 14/840,865

APPLICATION AS FILED - PART I

FOR	(Column 1) NUMBER FILED	(Column 2) NUMBER EXTRA	SMALL ENTITY RATE($)	SMALL ENTITY FEE($)	OR	OTHER THAN SMALL ENTITY RATE($)	OTHER THAN SMALL ENTITY FEE($)
BASIC FEE (37 CFR 1.16(a), (b), or (c))	N/A	N/A	N/A			N/A	280
SEARCH FEE (37 CFR 1.16(k), (i), or (m))	N/A	N/A	N/A			N/A	600
EXAMINATION FEE (37 CFR 1.16(o), (p), or (q))	N/A	N/A	N/A			N/A	720
TOTAL CLAIMS (37 CFR 1.16(i))	1 minus 20 =	*			OR	x 80 =	0.00
INDEPENDENT CLAIMS (37 CFR 1.16(h))	1 minus 3 =	*				x 420 =	0.00
APPLICATION SIZE FEE (37 CFR 1.16(s))	If the specification and drawings exceed 100 sheets of paper, the application size fee due is $310 ($155 for small entity) for each additional 50 sheets or fraction thereof. See 35 U.S.C. 41(a)(1)(G) and 37 CFR 1.16(s).						0.00
MULTIPLE DEPENDENT CLAIM PRESENT (37 CFR 1.16(j))							0.00
* If the difference in column 1 is less than zero, enter "0" in column 2.			TOTAL			TOTAL	1600

APPLICATION AS AMENDED - PART II

		(Column 1) CLAIMS REMAINING AFTER AMENDMENT		(Column 2) HIGHEST NUMBER PREVIOUSLY PAID FOR	(Column 3) PRESENT EXTRA	SMALL ENTITY RATE($)	SMALL ENTITY ADDITIONAL FEE($)	OR	OTHER THAN SMALL ENTITY RATE($)	OTHER THAN SMALL ENTITY ADDITIONAL FEE($)
AMENDMENT A	Total (37 CFR 1.16(i))	*	Minus	**	=	x =		OR	x =	
AMENDMENT A	Independent (37 CFR 1.16(h))	*	Minus	***	=	x =		OR	x =	
AMENDMENT A	Application Size Fee (37 CFR 1.16(s))									
AMENDMENT A	FIRST PRESENTATION OF MULTIPLE DEPENDENT CLAIM (37 CFR 1.16(j))							OR		
						TOTAL ADD'L FEE		OR	TOTAL ADD'L FEE	

		(Column 1) CLAIMS REMAINING AFTER AMENDMENT		(Column 2) HIGHEST NUMBER PREVIOUSLY PAID FOR	(Column 3) PRESENT EXTRA	RATE($)	ADDITIONAL FEE($)		RATE($)	ADDITIONAL FEE($)
AMENDMENT B	Total (37 CFR 1.16(i))	*	Minus	**	=	x =		OR	x =	
AMENDMENT B	Independent (37 CFR 1.16(h))	*	Minus	***	=	x =		OR	x =	
AMENDMENT B	Application Size Fee (37 CFR 1.16(s))									
AMENDMENT B	FIRST PRESENTATION OF MULTIPLE DEPENDENT CLAIM (37 CFR 1.16(j))							OR		
						TOTAL ADD'L FEE		OR	TOTAL ADD'L FEE	

* If the entry in column 1 is less than the entry in column 2, write "0" in column 3.
** If the "Highest Number Previously Paid For" IN THIS SPACE is less than 20, enter "20".
*** If the "Highest Number Previously Paid For" IN THIS SPACE is less than 3, enter "3".
The "Highest Number Previously Paid For" (Total or Independent) is the highest found in the appropriate box in column 1.

UNITED STATES PATENT AND TRADEMARK OFFICE

UNITED STATES DEPARTMENT OF COMMERCE
United States Patent and Trademark Office
Address: COMMISSIONER FOR PATENTS
P.O. Box 1450
Alexandria, Virginia 22313-1450
www.uspto.gov

APPLICATION NUMBER	FILING or 371(c) DATE	GRP ART UNIT	FIL FEE REC'D	ATTY.DOCKET.NO	TOT CLAIMS	IND CLAIMS
14/840,865	08/31/2015	2139	1740	062453-036	1	1

CONFIRMATION NO. 2445

UPDATED FILING RECEIPT

22204
NIXON PEABODY, LLP
799 Ninth Street, NW
SUITE 500
WASHINGTON, DC 20001

OC000000081738812

Date Mailed: 03/28/2016

Receipt is acknowledged of this non-provisional patent application. The application will be taken up for examination in due course. Applicant will be notified as to the results of the examination. Any correspondence concerning the application must include the following identification information: the U.S. APPLICATION NUMBER, FILING DATE, NAME OF APPLICANT, and TITLE OF INVENTION. Fees transmitted by check or draft are subject to collection. Please verify the accuracy of the data presented on this receipt. **If an error is noted on this Filing Receipt, please submit a written request for a Filing Receipt Correction. Please provide a copy of this Filing Receipt with the changes noted thereon. If you received a "Notice to File Missing Parts" for this application, please submit any corrections to this Filing Receipt with your reply to the Notice. When the USPTO processes the reply to the Notice, the USPTO will generate another Filing Receipt incorporating the requested corrections**

Inventor(s)

Hyun Lee, Ladera Ranch, CA;
Chi-She Chen, Walnut, CA;
Jeffrey C. Solomon, Irvine, CA;
Scott H. Milton, Irvine, CA;
Jayesh Bhakta, Cerritos, CA;

Applicant(s)

Netlist, Inc., Irvine, CA;

Power of Attorney: None

Domestic Priority data as claimed by applicant

This application is a CON of 14/489,269 09/17/2014 PAT 9158684
which is a CON of 13/559,476 07/26/2012 PAT 8874831
which claims benefit of 61/512,871 07/28/2011
and is a CIP of 12/240,916 09/29/2008 PAT 8301833
which is a CON of 12/131,873 06/02/2008 ABN
which claims benefit of 60/941,586 06/01/2007

Foreign Applications for which priority is claimed (You may be eligible to benefit from the **Patent Prosecution Highway** program at the USPTO. Please see http://www.uspto.gov for more information.) - None.
Foreign application information must be provided in an Application Data Sheet in order to constitute a claim to foreign priority. See 37 CFR 1.55 and 1.76.

Permission to Access Application via Priority Document Exchange: Yes

Permission to Access Search Results: No

Applicant may provide or rescind an authorization for access using Form PTO/SB/39 or Form PTO/SB/69 as appropriate.

If Required, Foreign Filing License Granted: 09/14/2015
The country code and number of your priority application, to be used for filing abroad under the Paris Convention, is **US 14/840,865**
Projected Publication Date: 07/07/2016
Non-Publication Request: No
Early Publication Request: No
Title

FLASH-DRAM HYBRID MEMORY MODULE

Preliminary Class

711

Statement under 37 CFR 1.55 or 1.78 for AIA (First Inventor to File) Transition Applications: No

PROTECTING YOUR INVENTION OUTSIDE THE UNITED STATES

Since the rights granted by a U.S. patent extend only throughout the territory of the United States and have no effect in a foreign country, an inventor who wishes patent protection in another country must apply for a patent in a specific country or in regional patent offices. Applicants may wish to consider the filing of an international application under the Patent Cooperation Treaty (PCT). An international (PCT) application generally has the same effect as a regular national patent application in each PCT-member country. The PCT process **simplifies** the filing of patent applications on the same invention in member countries, but **does not result** in a grant of "an international patent" and does not eliminate the need of applicants to file additional documents and fees in countries where patent protection is desired.

Almost every country has its own patent law, and a person desiring a patent in a particular country must make an application for patent in that country in accordance with its particular laws. Since the laws of many countries differ in various respects from the patent law of the United States, applicants are advised to seek guidance from specific foreign countries to ensure that patent rights are not lost prematurely.

Applicants also are advised that in the case of inventions made in the United States, the Director of the USPTO must issue a license before applicants can apply for a patent in a foreign country. The filing of a U.S. patent application serves as a request for a foreign filing license. The application's filing receipt contains further information and guidance as to the status of applicant's license for foreign filing.

Applicants may wish to consult the USPTO booklet, "General Information Concerning Patents" (specifically, the section entitled "Treaties and Foreign Patents") for more information on timeframes and deadlines for filing foreign patent applications. The guide is available either by contacting the USPTO Contact Center at 800-786-9199, or it can be viewed on the USPTO website at http://www.uspto.gov/web/offices/pac/doc/general/index.html.

For information on preventing theft of your intellectual property (patents, trademarks and copyrights), you may wish to consult the U.S. Government website, http://www.stopfakes.gov. Part of a Department of Commerce initiative, this website includes self-help "toolkits" giving innovators guidance on how to protect intellectual property in specific

countries such as China, Korea and Mexico. For questions regarding patent enforcement issues, applicants may call the U.S. Government hotline at 1-866-999-HALT (1-866-999-4258).

LICENSE FOR FOREIGN FILING UNDER

Title 35, United States Code, Section 184

Title 37, Code of Federal Regulations, 5.11 & 5.15

GRANTED

The applicant has been granted a license under 35 U.S.C. 184, if the phrase "IF REQUIRED, FOREIGN FILING LICENSE GRANTED" followed by a date appears on this form. Such licenses are issued in all applications where the conditions for issuance of a license have been met, regardless of whether or not a license may be required as set forth in 37 CFR 5.15. The scope and limitations of this license are set forth in 37 CFR 5.15(a) unless an earlier license has been issued under 37 CFR 5.15(b). The license is subject to revocation upon written notification. The date indicated is the effective date of the license, unless an earlier license of similar scope has been granted under 37 CFR 5.13 or 5.14.

This license is to be retained by the licensee and may be used at any time on or after the effective date thereof unless it is revoked. This license is automatically transferred to any related applications(s) filed under 37 CFR 1.53(d). This license is not retroactive.

The grant of a license does not in any way lessen the responsibility of a licensee for the security of the subject matter as imposed by any Government contract or the provisions of existing laws relating to espionage and the national security or the export of technical data. Licensees should apprise themselves of current regulations especially with respect to certain countries, of other agencies, particularly the Office of Defense Trade Controls, Department of State (with respect to Arms, Munitions and Implements of War (22 CFR 121-128)); the Bureau of Industry and Security, Department of Commerce (15 CFR parts 730-774); the Office of Foreign AssetsControl, Department of Treasury (31 CFR Parts 500+) and the Department of Energy.

NOT GRANTED

No license under 35 U.S.C. 184 has been granted at this time, if the phrase "IF REQUIRED, FOREIGN FILING LICENSE GRANTED" DOES NOT appear on this form. Applicant may still petition for a license under 37 CFR 5.12, if a license is desired before the expiration of 6 months from the filing date of the application. If 6 months has lapsed from the filing date of this application and the licensee has not received any indication of a secrecy order under 35 U.S.C. 181, the licensee may foreign file the application pursuant to 37 CFR 5.15(b).

SelectUSA

The United States represents the largest, most dynamic marketplace in the world and is an unparalleled location for business investment, innovation, and commercialization of new technologies. The U.S. offers tremendous resources and advantages for those who invest and manufacture goods here. Through SelectUSA, our nation works to promote and facilitate business investment. SelectUSA provides information assistance to the international investor community; serves as an ombudsman for existing and potential investors; advocates on behalf of U.S. cities, states, and regions competing for global investment; and counsels U.S. economic development organizations on investment attraction best practices. To learn more about why the United States is the best country in the world to develop

technology, manufacture products, deliver services, and grow your business, visit http://www.SelectUSA.gov or call +1-202-482-6800.

UNITED STATES PATENT AND TRADEMARK OFFICE

UNITED STATES DEPARTMENT OF COMMERCE
United States Patent and Trademark Office
Address: COMMISSIONER FOR PATENTS
P.O. Box 1450
Alexandria, Virginia 22313-1450
www.uspto.gov

APPLICATION NO.	FILING DATE	FIRST NAMED INVENTOR	ATTORNEY DOCKET NO.	CONFIRMATION NO.
14/840,865	08/31/2015	Hyun Lee	062453-036	2445

22204 7590 04/21/2016
NIXON PEABODY, LLP
799 Ninth Street, NW
SUITE 500
WASHINGTON, DC 20001

EXAMINER
ELMORE, STEPHEN C

ART UNIT	PAPER NUMBER
2138	

NOTIFICATION DATE	DELIVERY MODE
04/21/2016	ELECTRONIC

Please find below and/or attached an Office communication concerning this application or proceeding.

The time period for reply, if any, is set in the attached communication.

Notice of the Office communication was sent electronically on above-indicated "Notification Date" to the following e-mail address(es):

nppatent@nixonpeabody.com
ipairlink@nixonpeabody.com

PTOL-90A (Rev. 04/07)

Office Action Summary	Application No. 14/840,865	Applicant(s) LEE ET AL.	
	Examiner STEPHEN ELMORE	Art Unit 2138	AIA (First Inventor to File) Status No

-- The MAILING DATE of this communication appears on the cover sheet with the correspondence address --

Period for Reply

A SHORTENED STATUTORY PERIOD FOR REPLY IS SET TO EXPIRE 3 MONTHS FROM THE MAILING DATE OF THIS COMMUNICATION.

- Extensions of time may be available under the provisions of 37 CFR 1.136(a). In no event, however, may a reply be timely filed after SIX (6) MONTHS from the mailing date of this communication.
- If NO period for reply is specified above, the maximum statutory period will apply and will expire SIX (6) MONTHS from the mailing date of this communication.
- Failure to reply within the set or extended period for reply will, by statute, cause the application to become ABANDONED (35 U.S.C. § 133). Any reply received by the Office later than three months after the mailing date of this communication, even if timely filed, may reduce any earned patent term adjustment. See 37 CFR 1.704(b).

Status

1)☒ Responsive to communication(s) filed on 8/31/2015.

☐ A declaration(s)/affidavit(s) under **37 CFR 1.130(b)** was/were filed on _____.

2a)☐ This action is **FINAL**. 2b)☒ This action is non-final.

3)☐ An election was made by the applicant in response to a restriction requirement set forth during the interview on _____; the restriction requirement and election have been incorporated into this action.

4)☐ Since this application is in condition for allowance except for formal matters, prosecution as to the merits is closed in accordance with the practice under *Ex parte Quayle*, 1935 C.D. 11, 453 O.G. 213.

Disposition of Claims*

5)☒ Claim(s) 1 is/are pending in the application.

5a) Of the above claim(s) _____ is/are withdrawn from consideration.

6)☐ Claim(s) _____ is/are allowed.

7)☒ Claim(s) 1 is/are rejected.

8)☐ Claim(s) _____ is/are objected to.

9)☐ Claim(s) _____ are subject to restriction and/or election requirement.

* If any claims have been determined allowable, you may be eligible to benefit from the **Patent Prosecution Highway** program at a participating intellectual property office for the corresponding application. For more information, please see http://www.uspto.gov/patents/init_events/pph/index.jsp or send an inquiry to PPHfeedback@uspto.gov.

Application Papers

10)☐ The specification is objected to by the Examiner.

11)☒ The drawing(s) filed on 8/31/2015 is/are: a)☒ accepted or b)☐ objected to by the Examiner.

Applicant may not request that any objection to the drawing(s) be held in abeyance. See 37 CFR 1.85(a).

Replacement drawing sheet(s) including the correction is required if the drawing(s) is objected to. See 37 CFR 1.121(d).

Priority under 35 U.S.C. § 119

12)☐ Acknowledgment is made of a claim for foreign priority under 35 U.S.C. § 119(a)-(d) or (f).

Certified copies:

a)☐ All b)☐ Some** c)☐ None of the:

1.☐ Certified copies of the priority documents have been received.

2.☐ Certified copies of the priority documents have been received in Application No. _____.

3.☐ Copies of the certified copies of the priority documents have been received in this National Stage application from the International Bureau (PCT Rule 17.2(a)).

** See the attached detailed Office action for a list of the certified copies not received.

Attachment(s)

1) ☐ Notice of References Cited (PTO-892)

2) ☒ Information Disclosure Statement(s) (PTO/SB/08a and/or PTO/SB/08b) Paper No(s)/Mail Date 8/31/2015.

3) ☐ Interview Summary (PTO-413) Paper No(s)/Mail Date. _____ .

4) ☐ Other: _____.

Samsung Electronics Co., Ltd.
Ex. 1011, p. 99

The present application is being examined under the pre-AIA first to invent provisions.

DETAILED ACTION

1. This Office action responds to the Continuation application filed 8/31/2015.

2. Claim 1 is presented for examination.

Priority

3. Acknowledgment is made of applicant's claim for Domestic Benefit/National Stage priority based on applications filed 6/1/2007, 6/2/2008, 9/29/2008, 7/28/2011, 7/26/2012, and 9/17/2014. The priority requests are granted for the presently claimed invention of claim 1.

Information Disclosure Statement

4. The information disclosure statement filed 8/31/2015 contains listed items which fail to comply with 37 CFR § 1.98(a)(2), which requires a legible copy of all foreign patents, publications, or other information submitted for consideration by the Office. The listed items which fail to comply with 37 CFR § 1.98(a)(2) have been “lined-through” or “crossed-out”.

Double Patenting

5. A rejection based on double patenting of the "same invention" type finds its support in the language of 35 U.S.C. § 101 which states that "whoever invents or discovers any new and useful process ... may obtain a patent therefor ..." (Emphasis added). Thus, the term "same invention," in this context, means an invention drawn to identical subject matter. See *Miller v. Eagle Mfg. Co.*, 151 U.S. 186 (1894); *In re Ockert*, 245 F.2d 467, 114 USPQ 330 (CCPA 1957); and *In re Vogel*, 422 F.2d 438, 164 USPQ 619 (CCPA 1970).

A statutory type (35 U.S.C. § 101) double patenting rejection can be overcome by canceling or amending the conflicting claims so they are no longer coextensive in scope. The

filing of a terminal disclaimer cannot overcome a double patenting rejection based upon 35 U.S.C. § 101.

Claim 1 is rejected under 35 U.S.C. 101 as claiming the same invention as that of claim 1 of prior U.S. Patent No. 9,158,684. This is a statutory double patenting rejection.

Conclusion

6. The prior art made of record and not relied upon is cited to establish the level of skill in applicant's art and those arts considered reasonably pertinent to applicant's disclosure. See MPEP 707.05(c).

Any inquiry concerning this communication or earlier communications from the examiner should be directed to STEPHEN ELMORE whose telephone number is (571)272-4436. The examiner can normally be reached on Mon-Fri from 9:30-5:00.

If attempts to reach the examiner by telephone are unsuccessful, the examiner's supervisor, Mano Padmanabhan can be reached on (571) 272-4210. The fax phone number for the organization where this application or proceeding is assigned is 571-273-8300.

Information regarding the status of an application may be obtained from the Patent Application Information Retrieval (PAIR) system. Status information for published applications may be obtained from either Private PAIR or Public PAIR. Status information for unpublished applications is available through Private PAIR only. For more information about the PAIR system, see http://pair-direct.uspto.gov. Should you have questions on access to the Private PAIR system, contact the Electronic Business Center (EBC) at 866-217-9197 (toll-free). If you would like assistance from a USPTO Customer Service Representative or access to the automated information system, call 800-786-9199 (IN USA OR CANADA) or 571-272-1000.

/STEPHEN ELMORE/
Primary Examiner, Art Unit 2138

April 17, 2016

PTO/SB/08a (01-10)
Approved for use through 07/31/2012. OMB 0651-0031
U.S. Patent and Trademark Office; U.S. DEPARTMENT OF COMMERCE
Under the Paperwork Reduction Act of 1995, no persons are required to respond to a collection of information unless it contains a valid OMB control number.

INFORMATION DISCLOSURE STATEMENT BY APPLICANT (**Not for submission under 37 CFR 1.99)**	Application Number	
	Filing Date	2015-08-31
	First Named Inventor	Hyun Lee
	Art Unit	
	Examiner Name	
	Attorney Docket Number	062453-036

U.S.PATENTS						Remove
Examiner Initial*	Cite No	Patent Number	Kind Code[1]	Issue Date	Name of Patentee or Applicant of cited Document	Pages,Columns,Lines where Relevant Passages or Relevant Figures Appear
	1	2043099		1936-02-02	Hanna	
	2	3562555		1971-02-09	Ahrons	
	3	3916390		1975-10-28	Chang et al.	
	4	4234920		1980-11-18	Van Ness et al.	
	5	4420821		1983-12-13	Hoffman	
	6	4449205		1984-05-15	Hoffman	
	7	4965828		1990-10-23	Ergott, Jr. et al.	
	8	5430742		1995-07-04	Jeddeloh et al.	

ALL REFERENCES CONSIDERED EXCEPT WHERE LINED THROUGH. /S.E./

INFORMATION DISCLOSURE STATEMENT BY APPLICANT (Not for submission under 37 CFR 1.99)		
	Application Number	
	Filing Date	2015-08-31
	First Named Inventor	Hyun Lee
	Art Unit	
	Examiner Name	
	Attorney Docket Number	062453-036

	9	5519663		1996-05-21	Harper, Jr. et al.	
	10	5519831	A	1996-05-21	Holzhammer	
	11	5563839		1996-10-08	Herdt et al.	
	12	5577213		1996-11-19	Avery et al.	
	13	5619644		1997-04-08	Crockett et al.	
	14	5675725		1997-10-07	Malcolm	
	15	5870350		1999-02-09	Bertin et al.	
	16	5874995		1999-02-23	Naimpally et al.	
	17	5890192		1999-03-30	Lee et al.	
	18	5953215		1999-09-14	Karabatsos	
	19	6023421		2000-02-08	Clinton et al.	

ALL REFERENCES CONSIDERED EXCEPT WHERE LINED THROUGH. /S.E./

INFORMATION DISCLOSURE STATEMENT BY APPLICANT (Not for submission under 37 CFR 1.99)		
	Application Number	
	Filing Date	2015-08-31
	First Named Inventor	Hyun Lee
	Art Unit	
	Examiner Name	
	Attorney Docket Number	062453-036

	20	6112310		2000-08-29	Jun et al.	
	21	6145068		2000-11-07	Lewis	
	22	6158015		2000-12-05	Klein	
	23	6199142	B1	2001-03-06	Saulsbury et al.	
	24	6216247	B1	2001-04-10	Creta et al.	
	25	6269382		2001-07-31	Cabrera et al.	
	26	6336174		2002-01-01	Li et al.	
	27	6336176		2002-01-01	Leyda et al.	
	28	6421279	B1	2002-07-16	Tobita et al.	
	29	6459647	B1	2002-10-01	Kengeri	
	30	6487623		2002-11-26	Emerson et al.	

ALL REFERENCES CONSIDERED EXCEPT WHERE LINED THROUGH. /S.E./

INFORMATION DISCLOSURE STATEMENT BY APPLICANT (Not for submission under 37 CFR 1.99)		
	Application Number	
	Filing Date	2015-08-31
	First Named Inventor	Hyun Lee
	Art Unit	
	Examiner Name	
	Attorney Docket Number	062453-036

	31	6658507		2003-12-02	Chan	
	32	6691209		2004-02-10	O'Connell	
	33	6721860		2004-02-10	Klein	
	34	6769081	B1	2004-07-27	Parulkar	
	35	6799241	B2	2004-09-28	Kahn et al.	
	36	6799244		2004-09-28	Tanaka et al.	
	37	6816982		2004-11-09	Ravid	
	38	6487102	B1	2002-11-26	Halbert et al.	
	39	6944042	B2	2005-09-13	Komatsuzaki	
	40	6948029	B2	2005-09-20	Yano	
	41	6952368		2005-10-04	Miura et al.	

ALL REFERENCES CONSIDERED EXCEPT WHERE LINED THROUGH. /S.E./

INFORMATION DISCLOSURE STATEMENT BY APPLICANT (Not for submission under 37 CFR 1.99)		
	Application Number	
	Filing Date	2015-08-31
	First Named Inventor	Hyun Lee
	Art Unit	
	Examiner Name	
	Attorney Docket Number	062453-036

	42	7053470	B1	2006-05-30	Sellers et al.	
	43	7062618	B2	2006-06-13	Tsunoda et al.	
	44	7089412	B2	2006-08-08	Chen	
	45	7102391	B1	2006-09-05	Sun et al.	
	46	7111142		2006-09-19	Spencer et al.	
	47	7155627	B2	2006-12-26	Matsui	
	48	7200021	B2	2007-04-03	Raghuram	
	49	7234099	B2	2007-06-19	Gower et al.	
	50	7353325		2008-04-01	Lofgren et al.	
	51	7409491	B2	2008-12-05	Doblar et al.	
	52	7409590		2008-08-05	Moshayedi et al.	

ALL REFERENCES CONSIDERED EXCEPT WHERE LINED THROUGH. /S.E./

INFORMATION DISCLOSURE STATEMENT BY APPLICANT (Not for submission under 37 CFR 1.99)		
	Application Number	
	Filing Date	2015-08-31
	First Named Inventor	Hyun Lee
	Art Unit	
	Examiner Name	
	Attorney Docket Number	062453-036

	53	7411859	B2	2008-08-12	Sohn et al.	
	54	7421552	B2	2008-09-02	Long	
	55	7467251	B2	2008-12-16	Park et al.	
	56	7600142		1990-10-17	Groos	
	57	7716411	B2	2010-05-11	Panabaker et al.	
	58	7818488	B2	2010-10-19	Park et al.	
	59	8086955		2011-12-27	Zhou et al.	
	60	8102614		2012-01-24	Song et al.	
	61	8233303	B2	2012-07-31	Best et al.	
	62	8301833		2012-10-30	Chen et al.	
	63	8407395		2013-03-26	Kim et al.	

ALL REFERENCES CONSIDERED EXCEPT WHERE LINED THROUGH. /S.E./

INFORMATION DISCLOSURE STATEMENT BY APPLICANT (Not for submission under 37 CFR 1.99)		
	Application Number	
	Filing Date	2015-08-31
	First Named Inventor	Hyun Lee
	Art Unit	
	Examiner Name	
	Attorney Docket Number	062453-036

	64	8412879		2013-04-02	Chang et al.	
	65	8516187		2013-08-20	Chen et al.	
	66	8671243		2014-03-11	Chen et al.	
	67	8677060		2014-03-18	Chen et al.	
	68	8874831	B2	2014-10-28	Lee et al.	
	69	8880791	B2	2014-11-04	Chen et al.	
	70	8904098	B2	2014-12-02	Amidi et al.	
	71	8904099	B2	2014-12-02	Chen et al.	

If you wish to add additional U.S. Patent citation information please click the Add button. Add

U.S.PATENT APPLICATION PUBLICATIONS Remove

Examiner Initial*	Cite No	Publication Number	Kind Code[1]	Publication Date	Name of Patentee or Applicant of cited Document	Pages,Columns,Lines where Relevant Passages or Relevant Figures Appear
	1	20020083368		2002-06-27	Abe et al.	

ALL REFERENCES CONSIDERED EXCEPT WHERE LINED THROUGH. /S.E./

INFORMATION DISCLOSURE STATEMENT BY APPLICANT (Not for submission under 37 CFR 1.99)		
	Application Number	
	Filing Date	2015-08-31
	First Named Inventor	Hyun Lee
	Art Unit	
	Examiner Name	
	Attorney Docket Number	062453-036

	2	20020199061		2002-12-26	Friedman et al.	
	3	20030158995	A1	2003-08-21	Lee et al.	
	4	20040088508		2004-05-06	Ballard et al.	
	5	20040163027	A1	2004-08-19	MacLaren et al.	
	6	20040190210		2004-09-30	Leete	
	7	20050044302	A1	2005-02-25	Pauley et al.	
	8	20050060488	A1	2005-03-17	Poechmueller	
	9	20050132250	A1	2005-06-16	Hansen et al.	
	10	20050141273	A1	2005-06-30	Park et al.	
	11	20060039197	A1	2006-02-23	Khouri et al.	
	12	20060069896	A1	2006-03-30	Sanders	

ALL REFERENCES CONSIDERED EXCEPT WHERE LINED THROUGH. /S.E./

INFORMATION DISCLOSURE STATEMENT BY APPLICANT (Not for submission under 37 CFR 1.99)		
	Application Number	
	Filing Date	2015-08-31
	First Named Inventor	Hyun Lee
	Art Unit	
	Examiner Name	
	Attorney Docket Number	062453-036

	13	20060080515	A1	2006-04-13	Spiers et al.	
	14	20060294295	A1	2006-12-28	Fukuzo	
	15	20070136523		2007-06-14	Bonella et al.	
	16	20070192627		2007-08-16	Oshikiri	
	17	20080104344		2008-05-01	Shimozono et al.	
	18	20080195806		2008-08-14	Cope	
	19	20090031099	A1	2009-01-29	Sartore	
	20	20100274953		2010-10-28	Lee et al.	
	21	20110320804		2011-12-29	Chan et al.	
	22	20120204079		2012-08-09	Takefman et al.	
	23	20120271990		2012-10-25	Chen et al.	

ALL REFERENCES CONSIDERED EXCEPT WHERE LINED THROUGH. /S.E./

INFORMATION DISCLOSURE STATEMENT BY APPLICANT (Not for submission under 37 CFR 1.99)		
	Application Number	
	Filing Date	2015-08-31
	First Named Inventor	Hyun Lee
	Art Unit	
	Examiner Name	
	Attorney Docket Number	062453-036

	24	20130019076		2013-01-17	Amidi et al.	
	25	20130086309		2013-04-04	Lee et al.	
	26	20130254456		2013-09-26	Chen et al.	
	27	20130254497		2013-09-26	Chen et al.	
	28	20140059170		2014-02-27	Gasparakis et al.	
	29	20140156919	A1	2014-06-05	Chen et al.	
	30	20140156920	A1	2014-06-05	Chen et al.	

If you wish to add additional U.S. Published Application citation information please click the Add button. Add

FOREIGN PATENT DOCUMENTS Remove

Examiner Initial*	Cite No	Foreign Document Number[3]	Country Code[2] ¡	Kind Code[4]	Publication Date	Name of Patentee or Applicant of cited Document	Pages,Columns,Lines where Relevant Passages or Relevant Figures Appear	T[5]
	1	2013016723	WO	A3	2013-01-31	NETLIST INC.		☐
	2	2737383	EP	A2	2014-06-04	NETLIST INC.		☐

If you wish to add additional Foreign Patent Document citation information please click the Add button Add

ALL REFERENCES CONSIDERED EXCEPT WHERE LINED THROUGH. /S.E./

14840865 - GAU: 2138

Receipt date: 08/31/2015

INFORMATION DISCLOSURE STATEMENT BY APPLICANT

(Not for submission under 37 CFR 1.99)

Application Number	
Filing Date	2015-08-31
First Named Inventor	Hyun Lee
Art Unit	
Examiner Name	
Attorney Docket Number	062453-036

NON-PATENT LITERATURE DOCUMENTS			Remove
Examiner Initials*	Cite No	Include name of the author (in CAPITAL LETTERS), title of the article (when appropriate), title of the item (book, magazine, journal, serial, symposium, catalog, etc), date, pages(s), volume-issue number(s), publisher, city and/or country where published.	T5
	1	Office Action in U.S. Patent Application No. 12/240,916, mailed July 29, 2011.	☐
	2	Office Action in U.S. Patent Application No. 12/240,916, mailed February 1, 2012.	☐
	3	Advisory Action in U.S. Patent Application No. 12/240,916, mailed March 13, 2012.	☐
	4	Office Action in U.S. Patent Application No. 12/240,916, mailed April 3, 2012.	☐
	5	Office Action in U.S. Patent Application No. 13/536,173, mailed April 15, 2013.	☐
	6	Office Action in U.S. Patent Application No. 13/905,048, mailed August 1, 2013.	☐
	7	Notice of Allowance in U.S. Patent Application No. 13/559,476, mailed May 6, 2014.	☐
	8	International Search Report and Written Opinion in PCT/US12/48750, dated October 10, 2012.	☐
	9	International Preliminary Report on Patentability in PCT/US12/48750, mailed April 3, 2014.	☐

ALL REFERENCES CONSIDERED EXCEPT WHERE LINED THROUGH. /S.E./

EFS Web 2.1.17

14840865 - GAU: 2138

Receipt date: 08/31/2015

INFORMATION DISCLOSURE STATEMENT BY APPLICANT

(Not for submission under 37 CFR 1.99)

Application Number	
Filing Date	2015-08-31
First Named Inventor	Hyun Lee
Art Unit	
Examiner Name	
Attorney Docket Number	062453-036

	10	Office Action in U.S. Patent Application No. 13/625,563, mailed August 5, 2013.	☐
	11	Office Action in U.S. Patent Application No. 13/625,563, mailed May 9, 2014.	☐
	12	Office Action in U.S. Patent Application No. 13/905,053, mailed August 1, 2013.	☐
	13	Office Action in U.S. Patent Application No. 14/173,219, mailed March 13, 2014.	☐
	14	Office Action in U.S. Patent Application No. 14/173,242, mailed March 14, 2014.	☐
	15	JEDEC Standard 21–C, "Configurations for Solid State Memories," pp. 4.5.5–1 to 4.5.5–18.	☐
	16	Diablo Technologies, Inc.'s Invalidity Contentions, Case No. 13-CV-05889-YGR, dated June 6, 2014.	☐
	17	Smart Storage Systems, Inc's Invalidity Contentions, Case No. 4:13-cv-05889-YGR, dated June 6, 2014.	☐
	18	JEDEC Standard, "Configurations for Solid State Memories", JEDEC Standard 21–C, Release 9, August 1999, 114 pages.	☐
	19	WONG, A. "The BIOS Optimization Guide", Adrian's Rojak Pot, Rev. 6.2, 1998-2001, 67 pages.	☐
	20	American National Standard Dictionary of Electrical and Electrical Terms, IEEE, Fourth Edition, Revised, ANS/IEEE Std 100-1988, Institute of Electrical Engineers, November 3, 1988, pp. 215, 722, 964 and 1103.	☐

EFS Web 2.1.17

ALL REFERENCES CONSIDERED EXCEPT WHERE LINED THROUGH. /S.E./

14840865 - GAU: 2138

Receipt date: 08/31/2015

INFORMATION DISCLOSURE STATEMENT BY APPLICANT

(Not for submission under 37 CFR 1.99)

Application Number	
Filing Date	2015-08-31
First Named Inventor	Hyun Lee
Art Unit	
Examiner Name	
Attorney Docket Number	062453-036

	21	Webster's II New College Dictionary, Houghton Mifflin Company, Boston, MA, 2001, pp. 259, 1115.	☐
	22	Bruce, J., "Synchronous DRAM Architectures, Organizations, and Alternate Technologies", Electrical and Computer Engineering Dept., Univ. of Maryland, December 10, 2002, 22 pages.	☐
	23	David, H. et al., "Fully Buffered DIMM (FB-DIMM) Design Considerations", Intel Developer Forum, Intel Corp., February 18, 2004, 36 pages.	☐
	24	Horowitz, P. et al., "The Art of Electronics", Cambridge University Press 2nd Ed. 1989, pp. 471, 495-496.	☐
	25	Innis, J., "MPC8560 PowerQUICC III Compact Flash Interface Design", Freescale Semiconductor, Inc., 2004-2006, pp. 1-23.	☐
	26	Jacob, B., "Memory Systems Cache, DRAM, Disk", Morgan Kaufman Publishers, Burlington, MA, 2008, Preface and Ch. 7 pp. 315-322.	☐
	27	Jandhyala, S. et al., "Design-For-Test Analysis of a Buffered SDRAM DIMM", Semiconductor Group, Texas Instruments, Proceedings of International Workshop in Memory Technology, Design and Testing, Singapore, August 13014, 1996, 15 pages.	☐
	28	JEDEC Standard, Double Data Rate (DDR): SDRAM Specification: JESD79C (Revision JESD79B), March 2003, pp. 1-75.	☐
	29	JEDEC Standard, FBDIMM Specification: DDR2 SDRAM Fully Buffered DIMM (FBDIMM) Design Specification: JESD205, JEDEC SOLID STATE TECH. ASSOC., March 2007, pp. 1-129.	☐
	30	Mutnuary, B. et al., "Analysis of Fully Buffered DIMM Interface in High-speed Server Applications", IBM Corp, xSeries eServer Development, 2006 Electronic Components and Technology Conference, pp. 203-208.	☐
	31	Petition for Inter Partes Review of U.S. Patent No. 8,516,187 (on behalf of SanDisk, Corp.), filed June 19, 2014.	☐

EFS Web 2.1.17

ALL REFERENCES CONSIDERED EXCEPT WHERE LINED THROUGH. /S.E./

14840865 - GAU: 2138

Receipt date: 08/31/2015

INFORMATION DISCLOSURE STATEMENT BY APPLICANT

(Not for submission under 37 CFR 1.99)

Application Number	
Filing Date	2015-08-31
First Named Inventor	Hyun Lee
Art Unit	
Examiner Name	
Attorney Docket Number	062453-036

	32	Petition for Inter Partes Review of U.S. Patent No. 8,301,833 (on behalf of SanDisk, Corp.), filed June 20, 2014.	☐
	33	"Using Two Chip Selects to Enable Quad Rank", an IP.com Prior Art Database Technical Disclosure, IP.com Electronic Publication: December 17, 2005, 2 pages.	☐
	34	Petition for Inter Partes Review of U.S. Patent No. 8,516,187 (on behalf of SMART Modular Technologies, Inc.), filed August 22, 2014.	☐
	35	Petition for Inter Partes Review of U.S. Patent No. 8,301,833 (on behalf of SMART Modular Technologies, Inc.), filed August 22, 2014.	☐
	36	"Out of Stealth Mode, Start-Up MetaRAM Unveils New Technology That Quadruples DRAM Capacity", Press Release edited by Storage Newsletter on February 28, 2008 at StorageNewsLetter.com, 8 pages.	☐
	37	"MetaRAM Develops New Technology That Quadruples Memory Capacity of Servers and Workstations; Reduces Price by Up to 90 Percent", Press Release provided by MetaRAM and published on MarketWired.com, February 25, 2008, 3 pages.	☐
	38	"240pin DDR2 MetaSDRAM Registered DIMM based on 1 GB version C", Hynix Semiconductor, Product Description Rev. 0.2, September 2008, 32 pages.	☐
	39	Notice of Allowance in U.S. Patent Application No. 14/489,269, mailed October 8, 2015.	☐

If you wish to add additional non-patent literature document citation information please click the Add button **Add**

EXAMINER SIGNATURE

Examiner Signature	/Stephen Elmore/	Date Considered	04/17/2016

*EXAMINER: Initial if reference considered, whether or not citation is in conformance with MPEP 609. Draw line through a citation if not in conformance and not considered. Include copy of this form with next communication to applicant.

[1] See Kind Codes of USPTO Patent Documents at www.USPTO.GOV or MPEP 901.04. [2] Enter office that issued the document, by the two-letter code (WIPO Standard ST.3). [3] For Japanese patent documents, the indication of the year of the reign of the Emperor must precede the serial number of the patent document. [4] Kind of document by the appropriate symbols as indicated on the document under WIPO Standard ST.16 if possible. [5] Applicant is to place a check mark here if English language translation is attached.

EFS Web 2.1.17

ALL REFERENCES CONSIDERED EXCEPT WHERE LINED THROUGH. /S.E./

14840865 - GAU: 2138

Receipt date: 08/31/2015

INFORMATION DISCLOSURE STATEMENT BY APPLICANT

(Not for submission under 37 CFR 1.99)

Application Number	
Filing Date	2015-08-31
First Named Inventor	Hyun Lee
Art Unit	
Examiner Name	
Attorney Docket Number	062453-036

CERTIFICATION STATEMENT

Please see 37 CFR 1.97 and 1.98 to make the appropriate selection(s):

☐ That each item of information contained in the information disclosure statement was first cited in any communication from a foreign patent office in a counterpart foreign application not more than three months prior to the filing of the information disclosure statement. See 37 CFR 1.97(e)(1).

OR

☐ That no item of information contained in the information disclosure statement was cited in a communication from a foreign patent office in a counterpart foreign application, and, to the knowledge of the person signing the certification after making reasonable inquiry, no item of information contained in the information disclosure statement was known to any individual designated in 37 CFR 1.56(c) more than three months prior to the filing of the information disclosure statement. See 37 CFR 1.97(e)(2).

☐ See attached certification statement.

☐ The fee set forth in 37 CFR 1.17 (p) has been submitted herewith.

☒ A certification statement is not submitted herewith.

SIGNATURE

A signature of the applicant or representative is required in accordance with CFR 1.33, 10.18. Please see CFR 1.4(d) for the form of the signature.

Signature	/Khaled Shami/	Date (YYYY-MM-DD)	2015-08-31
Name/Print	Khaled Shami	Registration Number	38745

This collection of information is required by 37 CFR 1.97 and 1.98. The information is required to obtain or retain a benefit by the public which is to file (and by the USPTO to process) an application. Confidentiality is governed by 35 U.S.C. 122 and 37 CFR 1.14. This collection is estimated to take 1 hour to complete, including gathering, preparing and submitting the completed application form to the USPTO. Time will vary depending upon the individual case. Any comments on the amount of time you require to complete this form and/or suggestions for reducing this burden, should be sent to the Chief Information Officer, U.S. Patent and Trademark Office, U.S. Department of Commerce, P.O. Box 1450, Alexandria, VA 22313-1450. DO NOT SEND FEES OR COMPLETED FORMS TO THIS ADDRESS. **SEND TO: Commissioner for Patents, P.O. Box 1450, Alexandria, VA 22313-1450.**

ALL REFERENCES CONSIDERED EXCEPT WHERE LINED THROUGH. /S.E./

EFS Web 2.1.17

Privacy Act Statement

The Privacy Act of 1974 (P.L. 93-579) requires that you be given certain information in connection with your submission of the attached form related to a patent application or patent. Accordingly, pursuant to the requirements of the Act, please be advised that: (1) the general authority for the collection of this information is 35 U.S.C. 2(b)(2); (2) furnishing of the information solicited is voluntary; and (3) the principal purpose for which the information is used by the U.S. Patent and Trademark Office is to process and/or examine your submission related to a patent application or patent. If you do not furnish the requested information, the U.S. Patent and Trademark Office may not be able to process and/or examine your submission, which may result in termination of proceedings or abandonment of the application or expiration of the patent.

The information provided by you in this form will be subject to the following routine uses:

1. The information on this form will be treated confidentially to the extent allowed under the Freedom of Information Act (5 U.S.C. 552) and the Privacy Act (5 U.S.C. 552a). Records from this system of records may be disclosed to the Department of Justice to determine whether the Freedom of Information Act requires disclosure of these record s.

2. A record from this system of records may be disclosed, as a routine use, in the course of presenting evidence to a court, magistrate, or administrative tribunal, including disclosures to opposing counsel in the course of settlement negotiations.

3. A record in this system of records may be disclosed, as a routine use, to a Member of Congress submitting a request involving an individual, to whom the record pertains, when the individual has requested assistance from the Member with respect to the subject matter of the record.

4. A record in this system of records may be disclosed, as a routine use, to a contractor of the Agency having need for the information in order to perform a contract. Recipients of information shall be required to comply with the requirements of the Privacy Act of 1974, as amended, pursuant to 5 U.S.C. 552a(m).

5. A record related to an International Application filed under the Patent Cooperation Treaty in this system of records may be disclosed, as a routine use, to the International Bureau of the World Intellectual Property Organization, pursuant to the Patent Cooperation Treaty.

6. A record in this system of records may be disclosed, as a routine use, to another federal agency for purposes of National Security review (35 U.S.C. 181) and for review pursuant to the Atomic Energy Act (42 U.S.C. 218(c)).

7. A record from this system of records may be disclosed, as a routine use, to the Administrator, General Services, or his/her designee, during an inspection of records conducted by GSA as part of that agency's responsibility to recommend improvements in records management practices and programs, under authority of 44 U.S.C. 2904 and 2906. Such disclosure shall be made in accordance with the GSA regulations governing inspection of records for this purpose, and any other relevant (i.e., GSA or Commerce) directive. Such disclosure shall not be used to make determinations about individuals.

8. A record from this system of records may be disclosed, as a routine use, to the public after either publication of the application pursuant to 35 U.S.C. 122(b) or issuance of a patent pursuant to 35 U.S.C. 151. Further, a record may be disclosed, subject to the limitations of 37 CFR 1.14, as a routine use, to the public if the record was filed in an application which became abandoned or in which the proceedings were terminated and which application is referenced by either a published application, an application open to public inspections or an issued patent.

9. A record from this system of records may be disclosed, as a routine use, to a Federal, State, or local law enforcement agency, if the USPTO becomes aware of a violation or potential violation of law or regulation.

ALL REFERENCES CONSIDERED EXCEPT WHERE LINED THROUGH. /S.E./

Index of Claims	Application/Control No.	Applicant(s)/Patent Under Reexamination
	14840865	LEE ET AL.
	Examiner	**Art Unit**
	STEPHEN ELMORE	2138

✓	Rejected	-	Cancelled	N	Non-Elected	A	Appeal
=	Allowed	÷	Restricted	I	Interference	O	Objected

☐ Claims renumbered in the same order as presented by applicant ☐ CPA ☐ T.D. ☐ R.1.47

CLAIM		DATE								
Final	Original	04/17/2016								
	1	✓								

EAST Search History

EAST Search History (Prior Art)

Ref #	Hits	Search Query	DBs	Default Operator	Plurals	Time Stamp
L1	11370	711/103.ccls.	US-PGPUB; USPAT; USOCR; FPRS; EPO; JPO; IBM_TDB	OR	ON	2016/04/17 18:28
L2	2789	365/185.33.ccls.	US-PGPUB; USPAT; USOCR; FPRS; EPO; JPO; IBM_TDB	OR	ON	2016/04/17 18:28
L3	21178	711/111,112,114,154,156.ccls.	US-PGPUB; USPAT; USOCR; FPRS; EPO; JPO; IBM_TDB	OR	ON	2016/04/17 18:28
L4	33146	L1 or L2 or L3	US-PGPUB; USPAT; USOCR; FPRS; EPO; JPO; IBM_TDB	OR	ON	2016/04/17 18:28
L5	6379	hybrid near3 memory	US-PGPUB; USPAT; USOCR; FPRS; EPO; JPO; IBM_TDB	OR	ON	2016/04/17 18:28
L6	666	data adj manager and controller and memory adj controller	US-PGPUB; USPAT; USOCR; FPRS; EPO; JPO; IBM_TDB	OR	ON	2016/04/17 18:28
L7	16	L5 and L6	US-PGPUB; USPAT;	OR	ON	2016/04/17 18:28

			USOCR; FPRS; EPO; JPO; IBM_TDB;			
L8	3	L7 and ((@pd or @ad)<"20120726")	US-PGPUB; USPAT; USOCR; FPRS; EPO; JPO; IBM_TDB;	OR	ON	2016/04/17 18:28
L9	2	(US-20070136523-$).did. or (US-8412879-$).did.	US-PGPUB; USPAT	OR	ON	2016/04/17 18:28
L10	185600	(format$3 near3 data) with (transfer or transferred or transferring or move or moved or moving or transmitted or transmission or write or written or writing or store or stored or storing)	US-PGPUB; USPAT; USOCR; FPRS; EPO; JPO; IBM_TDB;	OR	ON	2016/04/17 18:28
L11	100	L6 and L10	US-PGPUB; USPAT; USOCR; FPRS; EPO; JPO; IBM_TDB;	OR	ON	2016/04/17 18:28
L12	4	L5 and L11	US-PGPUB; USPAT; USOCR; FPRS; EPO; JPO; IBM_TDB;	OR	ON	2016/04/17 18:28
L13	6	L4 and L11	US-PGPUB; USPAT; USOCR; FPRS; EPO; JPO; IBM_TDB;	OR	ON	2016/04/17 18:28
L14	373	(bi-direction or bi-directional) near3 fabric	US-PGPUB; USPAT; USOCR; FPRS; EPO; JPO; IBM_TDB;	OR	ON	2016/04/17 18:28
L15	4	L14 with (data adj manager)	US-PGPUB; USPAT; USOCR; FPRS;	OR	ON	2016/04/17 18:28

			EPO; JPO; IBM_TDB;			
L16	24	(data near3 (port or input-output or I/O or IO)) and L11	US-PGPUB; USPAT; USOCR; FPRS; EPO; JPO; IBM_TDB;	OR	ON	2016/04/17 18:28
L17	4	L5 and L16	US-PGPUB; USPAT; USOCR; FPRS; EPO; JPO; IBM_TDB;	OR	ON	2016/04/17 18:28
L18	15	L16 and ((@pd or @ad)<"20120726")	US-PGPUB; USPAT; USOCR; FPRS; EPO; JPO; IBM_TDB;	OR	ON	2016/04/17 18:28
L19	0	L4 and L18	US-PGPUB; USPAT; USOCR; FPRS; EPO; JPO; IBM_TDB;	OR	ON	2016/04/17 18:28
L20	15	L6 and L18	US-PGPUB; USPAT; USOCR; FPRS; EPO; JPO; IBM_TDB;	OR	ON	2016/04/17 18:28
L21	0	L14 and L20	US-PGPUB; USPAT; USOCR; FPRS; EPO; JPO; IBM_TDB;	OR	ON	2016/04/17 18:28
L22	0	L5 and L20	US-PGPUB; USPAT; USOCR; FPRS; EPO; JPO; IBM_TDB;	OR	ON	2016/04/17 18:28
L23	34769	(control adj information or control adj data or control adj meta-data or control adj	US-PGPUB;	OR	ON	2016/04/17 18:28

		metadata) near3 controller	USPAT; USOCR; FPRS; EPO; JPO; IBM_TDB;			
L24	4	((control adj information or control adj data or control adj meta-data or control adj metadata) near3 controller) and L16	US-PGPUB; USPAT; USOCR; FPRS; EPO; JPO; IBM_TDB;	OR	ON	2016/04/17 18:28
L25	3	L6 and L23 and L10 and L4	US-PGPUB; USPAT; USOCR; FPRS; EPO; JPO; IBM_TDB;	OR	ON	2016/04/17 18:28
L26	4	L6 and L23 and L10	US-PGPUB; USPAT; USOCR; FPRS; EPO; JPO; IBM_TDB;	OR	ON	2016/04/17 18:28
L27	12	L6 and L23	US-PGPUB; USPAT; USOCR; FPRS; EPO; JPO; IBM_TDB;	OR	ON	2016/04/17 18:28
L28	7045	((Hyun) near2 (Lee)).INV.	US-PGPUB; USPAT; USOCR	OR	ON	2016/04/17 18:28
L29	24	((Chi-She) near2 (Chen)).INV.	US-PGPUB; USPAT; USOCR	OR	ON	2016/04/17 18:28
L30	107	((Jeffrey) near2 (Solomon)).INV.	US-PGPUB; USPAT; USOCR	OR	ON	2016/04/17 18:28
L31	176	((Scott) near2 (Milton)).INV.	US-PGPUB; USPAT; USOCR	OR	ON	2016/04/17 18:28
L32	97	((Jayesh) near2 (Bhakta)).INV.	US-PGPUB; USPAT; USOCR	OR	ON	2016/04/17 18:28
L33	4	(data adj manager same controller same memory adj controller) and L5 and (L10	US-PGPUB;	OR	ON	2016/04/17 18:28

		or L14)	USPAT; USOCR; FPRS; EPO; JPO; IBM_TDB;			
L34	719	(hybrid near3 memory).ti.	US-PGPUB; USPAT; USOCR; FPRS; EPO; JPO; IBM_TDB;	OR	ON	2016/04/17 18:28
L35	10	L6 and L34	US-PGPUB; USPAT; USOCR; FPRS; EPO; JPO; IBM_TDB;	OR	ON	2016/04/17 18:28
L36	0	L35 and ((@pd or @ad)<"20120726")	US-PGPUB; USPAT; USOCR; FPRS; EPO; JPO; IBM_TDB;	OR	ON	2016/04/17 18:28
L37	10	(data adj manager and memory adj controller) and L34	US-PGPUB; USPAT; USOCR; FPRS; EPO; JPO; IBM_TDB;	OR	ON	2016/04/17 18:28
L38	0	L37 and ((@pd or @ad)<"20120726")	US-PGPUB; USPAT; USOCR; FPRS; EPO; JPO; IBM_TDB;	OR	ON	2016/04/17 18:28
L39	2	(data adj manager) and L34 and ((@pd or @ad)<"20120726")	US-PGPUB; USPAT; USOCR; FPRS; EPO; JPO; IBM_TDB;	OR	ON	2016/04/17 18:28
L40	37	("20080195806" | "6658507" | "5675725" | "20040190210" | "6336176" | "7409590" | "20100274953" | "6336174" | "5519663" | "6487623" | "20080104344" | "4420821" | "6799244" | "20020083368" | "4449205" | "8301833" | "7111142" | "20070192627" | "6158015" | "20120204079").PN.	US-PGPUB; USPAT; USOCR; FPRS; EPO; JPO; IBM_TDB;	OR	ON	2016/04/17 18:28

L41	1	L6 and L40	US-PGPUB; USPAT; USOCR; FPRS; EPO; JPO; IBM_TDB	OR	ON	2016/04/17 18:28
L42	110	("2043099" | "20030158995" | "20040163027" | "20050044302" | "20050060488" | "20050132250" | "20050141273" | "20060039197" | "20060069896" | "20060080515" | "20060294295" | "20090031099" | "3562555" | "3916390" | "4234920" | "4965828" | "5430742" | "5519831" | "5563839" | "5870350" | "5874995" | "5890192" | "5953215" | "6023421" | "6112310" | "6145068" | "6199142" | "6216247" | "6421279" | "6459647" | "6487102" | "6769081" | "6799241" | "6944042" | "6948029" | "6952368" | "7053470" | "7062618" | "7089412" | "7102391" | "7155627" | "7200021" | "7234099" | "7409491" | "7411859" | "7421552" | "7467251" | "7600142" | "7716411" | "7818488" | "8233303").PN.	US-PGPUB; USPAT; USOCR; FPRS; EPO; JPO; IBM_TDB	OR	ON	2016/04/17 18:28
L43	0	L14 and L42	US-PGPUB; USPAT; USOCR; FPRS; EPO; JPO; IBM_TDB	OR	ON	2016/04/17 18:28
L44	0	L16 and L42	US-PGPUB; USPAT; USOCR; FPRS; EPO; JPO; IBM_TDB	OR	ON	2016/04/17 18:28
L45	0	L6 and L42	US-PGPUB; USPAT; USOCR; FPRS; EPO; JPO; IBM_TDB	OR	ON	2016/04/17 18:28
L46	1	"8874831".pn.	US-PGPUB; USPAT; USOCR; FPRS; EPO; JPO; IBM_TDB	OR	ON	2016/04/17 18:28
L47	8	"8301833".pn.	US-PGPUB; USPAT;	OR	ON	2016/04/17 18:28

			USOCR; FPRS; EPO; JPO; IBM_TDB;			
L48	1	(US-8301833-$).did.	USPAT	OR	ON	2016/04/17 18:28
L49	3	L7 and ((@pd or @ad)<"20110728")	US-PGPUB; USPAT; USOCR; FPRS; EPO; JPO; IBM_TDB;	OR	ON	2016/04/17 18:28
L50	1	"8874831".pn.	US-PGPUB; USPAT; USOCR; FPRS; EPO; JPO; IBM_TDB;	OR	ON	2016/04/17 18:28
L51	82	("20020083368" | "20030158995" | "20040163027" | "20040190210" | "20050044302" | "20050060488" | "20050132250" | "20050141273" | "20060039197" | "20060069896" | "20060080515" | "20060294295" | "20070136523" | "20070192627" | "20080104344" | "20080195806" | "20090031099" | "20100274953" | "20110320804" | "20120204079" | "20140059170" | "2043099" | "3562555" | "3916390" | "4234920" | "4420821" | "4449205" | "4965828" | "5430742" | "5519663" | "5519831" | "5563839" | "5577213" | "5619644" | "5675725" | "5870350" | "5874995" | "5890192" | "5953215" | "6023421" | "6112310" | "6145068" | "6158015" | "6199142" | "6216247" | "6269382" | "6336174" | "6336176" | "6421279" | "6459647" | "6487102" | "6487623" | "6658507" | "6691209" | "6769081" | "6799241" | "6799244" | "6944042" | "6948029" | "6952368" | "7053470" | "7062618" | "7089412" | "7102391" | "7111142" | "7155627" | "7200021" | "7234099" | "7409491" | "7409590" | "7411859" | "7421552" | "7467251" | "7600142" | "7716411" | "7818488" | "8086955" | "8102614" | "8233303" | "8301833" | "8412879").PN.	US-PGPUB; USPAT; USOCR	OR	ON	2016/04/17 18:28
L52	8	"8301833".pn.	US-PGPUB; USPAT; USOCR; FPRS; EPO; JPO; IBM_TDB;	OR	ON	2016/04/17 18:28

L53	1	(US-8301833-$).did.	USPAT	OR	ON	2016/04/17 18:28
L54	1	(US-8102614-$).did.	USPAT	OR	ON	2016/04/17 18:28
L55	188	(format$3 near3 data) with (transfer or transferred or transferring or move or moved or moving or transmitted or transmission or write or written or writing or store or stored or storing) same (data adj manager)	US-PGPUB; USPAT; USOCR; FPRS; EPO; JPO; IBM_TDB;	OR	ON	2016/04/17 18:28
L56	3	((first adj3 signals) and (second adj3 signals) and (third adj3 signals)) and L55	US-PGPUB; USPAT; USOCR; FPRS; EPO; JPO; IBM_TDB;	OR	ON	2016/04/17 18:28
L57	11	((first adj3 signals) and (second adj3 signals) and (third adj3 signals)) and L34	US-PGPUB; USPAT; USOCR; FPRS; EPO; JPO; IBM_TDB;	OR	ON	2016/04/17 18:28
L58	8	L57 and ((@pd or @ad)<"20110728")	US-PGPUB; USPAT; USOCR; FPRS; EPO; JPO; IBM_TDB;	OR	ON	2016/04/17 18:28
L59	0	L37 and ((@pd or @ad)<"20110728")	US-PGPUB; USPAT; USOCR; FPRS; EPO; JPO; IBM_TDB;	OR	ON	2016/04/17 18:28
L60	1265	G06F12/0638.CPC.	US-PGPUB; USPAT; USOCR; FPRS; EPO; JPO; IBM_TDB;	OR	ON	2016/04/17 18:28
L61	15570	G06F12/0246.CPC.	US-PGPUB; USPAT; USOCR; FPRS; EPO; JPO; IBM_TDB;	OR	ON	2016/04/17 18:28
L62	3078	G06F13/4243.CPC.	US-	OR	ON	2016/04/17

			PGPUB; USPAT; USOCR; FPRS; EPO; JPO; IBM_TDB;			18:28
L63	6872	G11C7/1072.CPC.	US-PGPUB; USPAT; USOCR; FPRS; EPO; JPO; IBM_TDB;	OR	ON	2016/04/17 18:28
L64	434	G11C14/0018.CPC.	US-PGPUB; USPAT; USOCR; FPRS; EPO; JPO; IBM_TDB;	OR	ON	2016/04/17 18:28
L65	26307	L60 or L61 or L62 or L63 or L64	US-PGPUB; USPAT; USOCR; FPRS; EPO; JPO; IBM_TDB;	OR	ON	2016/04/17 18:28
L66	4	L55 and L65	US-PGPUB; USPAT; USOCR; FPRS; EPO; JPO; IBM_TDB;	OR	ON	2016/04/17 18:28
L67	0	L66 and ((@pd or @ad)<"20110728")	US-PGPUB; USPAT; USOCR; FPRS; EPO; JPO; IBM_TDB;	OR	ON	2016/04/17 18:28
L68	11	L5 and L57	US-PGPUB; USPAT; USOCR; FPRS; EPO; JPO; IBM_TDB;	OR	ON	2016/04/17 18:28
L69	2	L6 and L68	US-PGPUB; USPAT; USOCR; FPRS; EPO; JPO;	OR	ON	2016/04/17 18:28

			IBM_TDB;			
L70	2	(data adj manager) and L68	US-PGPUB; USPAT; USOCR; FPRS; EPO; JPO; IBM_TDB;	OR	ON	2016/04/17 18:28
L71	2	L57 and L65	US-PGPUB; USPAT; USOCR; FPRS; EPO; JPO; IBM_TDB;	OR	ON	2016/04/17 18:28
L72	104	(data adj manager) and L65	US-PGPUB; USPAT; USOCR; FPRS; EPO; JPO; IBM_TDB;	OR	ON	2016/04/17 18:28
L73	2	((first adj3 signals) and (second adj3 signals) and (third adj3 signals)) and L72	US-PGPUB; USPAT; USOCR; FPRS; EPO; JPO; IBM_TDB;	OR	ON	2016/04/17 18:28
L90	10	("9158684" or "8874831" or "8301833").PN.	US-PGPUB; USPAT; USOCR; FPRS; EPO; JPO; IBM_TDB;	OR	ON	2016/04/17 18:33
L91	207	("20020083368" | "20020199061" | "20030158995" | "20040088508" | "20040163027" | "20040190210" | "20050044302" | "20050060488" | "20050132250" | "20050141273" | "20060039197" | "20060069896" | "20060080515" | "20060294295" | "20070136523" | "20070192627" | "20080104344" | "20080195806" | "20090031099" | "20100274953" | "20110320804" | "20120204079" | "20120271990" | "20130019076" | "20130086309" | "20130254456" | "20130254497" | "20140059170" | "20140156919" | "20140156920" | "2043099" | "3562555" | "3916390" | "4234920" | "4420821" | "4449205" | "4965828" | "5430742" | "5519663" | "5519831" | "5563839" | "5577213" | "5619644" | "5675725" | "5870350" | "5874995" | "5890192" | "5953215" |	US-PGPUB; USPAT; USOCR; FPRS; EPO; JPO; IBM_TDB;	OR	ON	2016/04/17 18:36

		"6023421" | "6112310" | "6145068" | "6158015" | "6199142" | "6216247" | "6269382" | "6336174" | "6336176" | "6421279" | "6459647" | "6487102" | "6487623" | "6658507" | "6691209" | "6721860" | "6769081" | "6799241" | "6799244" | "6816982" | "6944042" | "6948029" | "6952368" | "7053470" | "7062618" | "7089412" | "7102391" | "7111142" | "7155627" | "7200021" | "7234099" | "7353325" | "7409491" | "7409590" | "7411859" | "7421552" | "7467251" | "7600142" | "7716411" | "7818488" | "8086955" | "8102614" | "8233303" | "8301833" | "8407395" | "8412879" | "8516187" | "8671243" | "8677060" | "8874831" | "8880791" | "8904098" | "8904099").PN.				
L92	3	72 and 91	US-PGPUB; USPAT; USOCR; FPRS; EPO; JPO; IBM_TDB;	OR	ON	2016/04/17 18:36

EAST Search History (Interference)

Ref #	Hits	Search Query	DBs	Default Operator	Plurals	Time Stamp
L74	24	((Chi-She) near2 (Chen)).INV.	US-PGPUB; USPAT; UPAD	OR	ON	2016/04/17 18:28
L75	107	((Jeffrey) near2 (Solomon)).INV.	US-PGPUB; USPAT; UPAD	OR	ON	2016/04/17 18:28
L76	132	((Scott) near2 (Milton)).INV.	US-PGPUB; USPAT; UPAD	OR	ON	2016/04/17 18:28
L77	97	((Jayesh) near2 (Bhakta)).INV.	US-PGPUB; USPAT; UPAD	OR	ON	2016/04/17 18:28
L78	7045	((Hyun) near2 (Lee)).INV.	US-PGPUB; USPAT; UPAD	OR	ON	2016/04/17 18:28
L79	7289	L74 or L75 or L76 or L77 or L78	US-PGPUB; USPAT; UPAD	OR	ON	2016/04/17 18:28
L80	10	(data adj manager with controller with memory adj controller).clm.	US-PGPUB; USPAT; UPAD	OR	ON	2016/04/17 18:28
L81	4	L79 and L80	US-PGPUB; USPAT; UPAD	OR	ON	2016/04/17 18:28
L82	13234	(data adj path or memory adj segment).clm.	US-PGPUB; USPAT; UPAD	OR	ON	2016/04/17 18:28
L83	49	L79 and L82	US-PGPUB; USPAT;	OR	ON	2016/04/17 18:28

			UPAD			
L84	4	L80 and L83	US-PGPUB; USPAT; UPAD	OR	ON	2016/04/17 18:28
L85	11327	711/103.ccls.	US-PGPUB; USPAT; UPAD	OR	ON	2016/04/17 18:28
L86	1583	(data adj manager).clm.	US-PGPUB; USPAT; UPAD	OR	ON	2016/04/17 18:28
L87	603	G06F12/0638.CPC.	US-PGPUB; USPAT; UPAD	OR	ON	2016/04/17 18:28
L88	20	L79 and L85	US-PGPUB; USPAT; UPAD	OR	ON	2016/04/17 18:28
L89	3	L86 and L88	US-PGPUB; USPAT; UPAD	OR	ON	2016/04/17 18:28

4/17/2016 6:37:55 PM
C:\Users\selmore\Documents\EAST\Workspaces\14840865.wsp

Search Notes	Application/Control No.	Applicant(s)/Patent Under Reexamination
	14840865	LEE ET AL.
	Examiner	**Art Unit**
	STEPHEN ELMORE	2138

CPC- SEARCHED

Symbol	Date	Examiner
G06F 12/0638; G06F 12/0246; G06F 13/4243; G11C 7/1072; G11C 14/0018;	4/17/2016	SE

CPC COMBINATION SETS - SEARCHED

Symbol	Date	Examiner

US CLASSIFICATION SEARCHED

Class	Subclass	Date	Examiner
711	103, 111, 112, 114, 154, 156	4/17/2016	SE
365	185.33	4/17/2016	SE

SEARCH NOTES

Search Notes	Date	Examiner
EAST	4/17/2016	SE
Inventor Name Search for DP	4/17/2016	SE

INTERFERENCE SEARCH

US Class/ CPC Symbol	US Subclass / CPC Group	Date	Examiner

UNITED STATES PATENT AND TRADEMARK OFFICE

UNITED STATES DEPARTMENT OF COMMERCE
United States Patent and Trademark Office
Address: COMMISSIONER FOR PATENTS
P.O. Box 1450
Alexandria, Virginia 22313-1450
www.uspto.gov

APPLICATION NUMBER	FILING OR 371(C) DATE	FIRST NAMED APPLICANT	ATTY. DOCKET NO./TITLE
14/840,865	08/31/2015	Hyun Lee	062453-036

CONFIRMATION NO. 2445

22204
NIXON PEABODY, LLP
799 Ninth Street, NW
SUITE 500
WASHINGTON, DC 20001

PUBLICATION NOTICE

OC000000084194570

Title:FLASH-DRAM HYBRID MEMORY MODULE

Publication No.US-2016-0196223-A1
Publication Date:07/07/2016

NOTICE OF PUBLICATION OF APPLICATION

The above-identified application will be electronically published as a patent application publication pursuant to 37 CFR 1.211, et seq. The patent application publication number and publication date are set forth above.

The publication may be accessed through the USPTO's publically available Searchable Databases via the Internet at www.uspto.gov. The direct link to access the publication is currently http://www.uspto.gov/patft/.

The publication process established by the Office does not provide for mailing a copy of the publication to applicant. A copy of the publication may be obtained from the Office upon payment of the appropriate fee set forth in 37 CFR 1.19(a)(1). Orders for copies of patent application publications are handled by the USPTO's Office of Public Records. The Office of Public Records can be reached by telephone at (703) 308-9726 or (800) 972-6382, by facsimile at (703) 305-8759, by mail addressed to the United States Patent and Trademark Office, Office of Public Records, Alexandria, VA 22313-1450 or via the Internet.

In addition, information on the status of the application, including the mailing date of Office actions and the dates of receipt of correspondence filed in the Office, may also be accessed via the Internet through the Patent Electronic Business Center at www.uspto.gov using the public side of the Patent Application Information and Retrieval (PAIR) system. The direct link to access this status information is currently http://pair.uspto.gov/. Prior to publication, such status information is confidential and may only be obtained by applicant using the private side of PAIR.

Further assistance in electronically accessing the publication, or about PAIR, is available by calling the Patent Electronic Business Center at 1-866-217-9197.

Office of Data Managment, Application Assistance Unit (571) 272-4000, or (571) 272-4200, or 1-888-786-0101

IN THE UNITED STATES PATENT AND TRADEMARK OFFICE

APPLICANT:	Hyun LEE	CONFIRMATION NO.: 2445
APPLICATION NO.:	14/840,865	
FILING DATE:	August 31, 2015	
TITLE:	FLASH-DRAM HYBRID MEMORY MODULE	
EXAMINER:	Stephen C. ELMORE	
ART UNIT:	2138	

Mail Stop Amendment
Commissioner for Patents
P.O. Box 1450
Alexandria, VA 22313-1450

AMENDMENT AND/OR REPLY TO OFFICE ACTION

Sir:

In response to the Office Action mailed April 21, 2016, please amend the subject application as indicated.

Amendments to the Claims, if any, are reflected in the Listing of Claims beginning on page **2**.

Remarks begin on page **7**.

Samsung Electronics Co., Ltd.
Ex. 1011, p. 133

In the Claims

The following Listing of Claims replaces all prior versions in the application:

LISTING OF CLAIMS

1. (Canceled)

2. (New) A memory module comprising:

a data manager configured to be coupled to a memory controller of a host system using a data bus, the data manager is operable to communicate data signals with the memory controller of the host system by way of the data bus in accordance with a first protocol;

a first volatile memory subsystem coupled to the data manager using a first data bus, the first volatile memory subsystem is operable to communicate data signals with the data manager by way of the first data bus in accordance with the first protocol;

a second volatile memory subsystem coupled to the data manager using a second data bus, the second volatile memory subsystem is operable to communicate data signals with the data manager by way of the second data bus in accordance with the first protocol;

a non-volatile memory subsystem coupled to the data manager using a third data bus, the non-volatile memory subsystem is operable to communicate data signals with the data manager by way of the third data bus using a second protocol; and

a controller operable to receive one or more commands from the memory controller of the host system in accordance with the first protocol, and in response to the one or more commands received from the memory controller of the host system, the controller generates and transmits one or more control signals to the data manager, wherein, in response to the one or more control signals, the data manager transfers data between the first volatile memory subsystem and the memory controller of the host system and transfers data signals between the non-volatile memory subsystem and the second volatile memory subsystem.

3. (New) The memory module of claim 2, wherein the second protocol is different from the first protocol.

Samsung Electronics Co., Ltd.
Ex. 1011, p. 134

4. (New) The memory module of claim 3, wherein the first protocol is selected from the group consisting of DDR, DDR2, DDR3, and DDR4 protocols.

5. (New) The memory module of claim 2, wherein the data manager controls data traffic between any one of the first volatile memory subsystem and the second volatile memory subsystem and any one of the non-volatile memory subsystem and the memory controller of the host system based on one or more commands received from the controller.

6. (New) The memory module of claim 2, wherein the data manager controls a starting time of a data transfer between any one of the first volatile memory subsystem and the second volatile memory subsystem and any one of the non-volatile memory subsystem and the memory controller of the host system based on one or more commands or control signals received from the controller.

7. (New) The memory module of claim 2, wherein the data manager is configured as a bi-directional data transfer fabric.

8. (New) The memory module of claim 2, wherein the data manager is operable to concurrently transfer data (i) between the first volatile memory subsystem and the memory controller of the host system, and (ii) between the non-volatile memory subsystem and the second volatile memory subsystem.

9. (New) The memory module of claim 2, wherein the data manager further comprises a data formatting subsystem operable to format data to be transferred via the data bus, the first data bus, the second data bus and the third data bus.

10. (New) A memory module couplable to a memory controller of a host system, the memory module comprising:

a non-volatile memory (NVM) subsystem coupled to a NVM controller;

a data manager coupled to a data manager controller and to the NVM subsystem;

a volatile memory (VM) subsystem coupled to a VM controller and to the data manager; and

a controller operable to receive a command from the memory controller of the host system, the controller include the NVM controller, the VM controller, and the data manager

Samsung Electronics Co., Ltd.
Ex. 1011, p. 135

controller, the VM controller is operable (i) to generate and transmit a first command to the VM subsystem in response to the command received from the memory controller of the host system, and (ii) to generate and transmit a second command to the VM subsystem, wherein the second command is generated by the VM controller independently from the command received from the memory controller of the host system, and wherein the controller is operable to direct (i) operation of the NVM subsystem by way of the NVM controller, (ii) operation of the VM subsystem by way of the VM controller, and (iii) operation of the data manager by way of the data manager controller to transfer data between any two or more of the memory controller of the host system, the VM subsystem, and the NVM subsystem based on any one of the first command and the second command.

11. (New) The memory module of claim 10, wherein the controller further includes an interface scheduler, the interface scheduler schedules the VM subsystem operation and the NVM subsystem operation such that no resource conflict occurs in the data manager.

12. (New) The memory module of claim 10, wherein the controller further includes an interface scheduler, the interface scheduler assigns time slots for the VM controller and the NVM controller based on current command status and a pending command received or to be received from the memory controller of the host system.

13. (New) The memory module of claim 10, wherein the VM subsystem is operable to exchange data with the NVM subsystem by way of the data manager in response to the second command received from the VM controller.

14. (New) The memory module of claim 10, wherein the controller further includes an interface scheduler, if the command received by the controller from the memory controller of the host system is a read or write operation from/to the VM subsystem that conflicts with an operation being executed by VM subsystem in response to the second command, then the interface scheduler instructs the VM controller (i) to abort the current operation of VM subsystem, and (ii) to execute an operation in response to the first command.

15. (New) The memory module of claim 10, wherein the controller further includes an interface scheduler, if the command received by the controller from the memory controller of the

Samsung Electronics Co., Ltd.
Ex. 1011, p. 136

host system is a read or write operation from/to the VM subsystem that conflicts with an operation being executed by VM subsystem in response to the second command, then the interface scheduler instructs the VM controller to complete the current operation of VM subsystem before executing an operation in response to the first command.

16. (New) The memory module of claim 10, wherein the controller further includes an interface scheduler, if the command received by the controller from the memory controller of the host system is a read or write operation from/to the VM subsystem that conflicts with an operation being executed by VM subsystem in response to the second command, then the interface scheduler instructs the VM controller (i) to halt the current operation of VM subsystem, (ii) to execute an operation in response to the first command, and (iii) to resume the operation in response to the second command.

17. (New) A memory module couplable to a memory controller of a host system, the memory module comprising:

a non-volatile memory (NVM) subsystem;

a data manager coupled to a data manager controller and to the NVM subsystem;

a volatile memory (VM) subsystem coupled to the data manager; and

a controller operable to receive a read command from the memory controller of the host system, the controller is configured to determine, in response to the read command, a target address for a requested data, and if requested data is not stored in the VM subsystem, then the controller (i) initiates data transfer operations from the NVM subsystem to the VM subsystem by way of the data manager, and (ii) initiates data transfer operations from the VM subsystem to the memory controller of the host system by way of the data manager.

18. (New) The memory module of claim 17, wherein the controller is operable to direct (i) operation of the NVM subsystem by way of a NVM controller, (ii) operation of the VM subsystem by way of a VM controller, and (iii) operation of the data manager by way of a data manager controller to transfer data between any two or more of the memory controller of the host system, the VM subsystem, and the NVM subsystem based on the read command.

19. (New) The memory module of claim 17, wherein the data manager controls a starting time of a data transfer between any two or more of the memory controller of the host system, the VM subsystem, and the NVM subsystem based on the read command.

20. (New) The memory module of claim 17, wherein the VM subsystem includes first and second VM subsystems.

21. (New) The memory module of claim 20, wherein the data manager controls a starting time of a data transfer between any one of the first VM subsystem and the second VM subsystem and any one of the NVM subsystem and the memory controller of the host system based on the read command.

22. (New) The memory module of claim 20, wherein the data manager is operable to concurrently transfer data (i) between the first VM subsystem and the memory controller of the host system, and (ii) between the NVM subsystem and the second VM subsystem.

REMARKS

The Office Action mailed April 21, 2016 has been carefully considered. Reconsideration in view of the following remarks is respectfully requested.

Canceled Claims

Claim 1 has been canceled without prejudice or disclaimer of the subject matter contained therein.

Rejection(s) Pursuant to Judicially-Created Double Patenting

Claim 1 stands rejected pursuant to the judicially-created doctrine of obviousness-type double patenting as allegedly being unpatentable over claim 1 of prior U.S. Patent No. 9,158,684.

Claim 1 has been canceled and the rejection thereof is moot.

Newly-Added Claims

Claims 2-22 have been added to further particularly point out and distinctly claim the subject matter regarded as the invention.

Conclusion

In view of the preceding discussion, Applicants respectfully urge that the claims of the present application define patentable subject matter and should be passed to allowance.

If the Examiner believes that a telephone call would help advance prosecution, the Examiner is kindly invited to call the undersigned attorney at the number below.

Please charge any additional required fees, including those necessary to obtain extensions of time to render timely the filing of the instant Amendment and/or Reply to Office Action, or credit any overpayment not otherwise credited, to our Deposit Account No. 19-2380.

Respectfully submitted,

NIXON PEABODY LLP

Dated: October 20, 2016

/Khaled Shami/
Khaled Shami
Reg. No. 38,745

NIXON PEABODY LLP
799 9TH STREET, N.W., SUITE 500
WASHINGTON, D.C. 20001-4501
TEL: 202-585-8000
FAX: 202-585-8080

Samsung Electronics Co., Ltd.
Ex. 1011, p. 140

Electronic Patent Application Fee Transmittal

Application Number:	14840865
Filing Date:	31-Aug-2015
Title of Invention:	FLASH-DRAM HYBRID MEMORY MODULE
First Named Inventor/Applicant Name:	Hyun Lee
Filer:	Khaled Shami/Sheila M. Mattingly
Attorney Docket Number:	062453-036

Filed as Large Entity

Filing Fees for Utility under 35 USC 111(a)

Description	Fee Code	Quantity	Amount	Sub-Total in USD($)
Basic Filing:				
Pages:				
Claims:				
CLAIMS IN EXCESS OF 20	1202	1	80	80
Miscellaneous-Filing:				
Petition:				
Patent-Appeals-and-Interference:				
Post-Allowance-and-Post-Issuance:				

Description	Fee Code	Quantity	Amount	Sub-Total in USD($)
Extension-of-Time:				
Extension - 3 months with $0 paid	1253	1	1400	1400
Miscellaneous:				
		Total in USD ($)		**1480**

Electronic Acknowledgement Receipt

EFS ID:	27277502
Application Number:	14840865
International Application Number:	
Confirmation Number:	2445
Title of Invention:	FLASH-DRAM HYBRID MEMORY MODULE
First Named Inventor/Applicant Name:	Hyun Lee
Customer Number:	22204
Filer:	Khaled Shami/Sheila M. Mattingly
Filer Authorized By:	Khaled Shami
Attorney Docket Number:	062453-036
Receipt Date:	20-OCT-2016
Filing Date:	31-AUG-2015
Time Stamp:	16:45:33
Application Type:	Utility under 35 USC 111(a)

Payment information:

Submitted with Payment	yes
Payment Type	DA
Payment was successfully received in RAM	$1480
RAM confirmation Number	102116INTEFSW00003532192380
Deposit Account	
Authorized User	
The Director of the USPTO is hereby authorized to charge indicated fees and credit any overpayment as follows:	

File Listing:

Document Number	Document Description	File Name	File Size(Bytes)/ Message Digest	Multi Part /.zip	Pages (if appl.)
1		062453_036_Amendment.pdf	78779 52e162faad2f98a699c0fe96dad45c508a5b8cb7	yes	8

Multipart Description/PDF files in .zip description

Document Description	Start	End
Amendment/Req. Reconsideration-After Non-Final Reject	1	1
Claims	2	6
Applicant Arguments/Remarks Made in an Amendment	7	8

Warnings:

The page size in the PDF is too large. The pages should be 8.5 x 11 or A4. If this PDF is submitted, the pages will be resized upon entry into the Image File Wrapper and may affect subsequent processing

Information:

2	Fee Worksheet (SB06)	fee-info.pdf	32284 4a3748ac9a898f85817878694472e221361eaa8f	no	2

Warnings:

Information:

Total Files Size (in bytes):	111063

This Acknowledgement Receipt evidences receipt on the noted date by the USPTO of the indicated documents, characterized by the applicant, and including page counts, where applicable. It serves as evidence of receipt similar to a Post Card, as described in MPEP 503.

New Applications Under 35 U.S.C. 111
If a new application is being filed and the application includes the necessary components for a filing date (see 37 CFR 1.53(b)-(d) and MPEP 506), a Filing Receipt (37 CFR 1.54) will be issued in due course and the date shown on this Acknowledgement Receipt will establish the filing date of the application.

National Stage of an International Application under 35 U.S.C. 371
If a timely submission to enter the national stage of an international application is compliant with the conditions of 35 U.S.C. 371 and other applicable requirements a Form PCT/DO/EO/903 indicating acceptance of the application as a national stage submission under 35 U.S.C. 371 will be issued in addition to the Filing Receipt, in due course.

New International Application Filed with the USPTO as a Receiving Office
If a new international application is being filed and the international application includes the necessary components for an international filing date (see PCT Article 11 and MPEP 1810), a Notification of the International Application Number and of the International Filing Date (Form PCT/RO/105) will be issued in due course, subject to prescriptions concerning national security, and the date shown on this Acknowledgement Receipt will establish the international filing date of the application.

Doc code: IDS
Doc description: Information Disclosure Statement (IDS) Filed

PTO/SB/08a (03-15)
Approved for use through 07/31/2016. OMB 0651-0031
U.S. Patent and Trademark Office; U.S. DEPARTMENT OF COMMERCE
Under the Paperwork Reduction Act of 1995, no persons are required to respond to a collection of information unless it contains a valid OMB control number.

INFORMATION DISCLOSURE STATEMENT BY APPLICANT

(Not for submission under 37 CFR 1.99)

Application Number	14840865
Filing Date	2015-08-31
First Named Inventor	Hyun LEE
Art Unit	2138
Examiner Name	Stephen C. ELMORE
Attorney Docket Number	062453-036

U.S.PATENTS Remove

Examiner Initial*	Cite No	Patent Number	Kind Code[1]	Issue Date	Name of Patentee or Applicant of cited Document	Pages,Columns,Lines where Relevant Passages or Relevant Figures Appear
	1	9158684	B2	2015-10-13	Lee et al.	

If you wish to add additional U.S. Patent citation information please click the Add button. Add

U.S.PATENT APPLICATION PUBLICATIONS Remove

Examiner Initial*	Cite No	Publication Number	Kind Code[1]	Publication Date	Name of Patentee or Applicant of cited Document	Pages,Columns,Lines where Relevant Passages or Relevant Figures Appear
	1	20100110748	A1	2010-05-06	Best	
	2	20110161569	A1	2011-06-30	Shan et al.	

If you wish to add additional U.S. Published Application citation information please click the Add button. Add

FOREIGN PATENT DOCUMENTS Remove

Examiner Initial*	Cite No	Foreign Document Number[3]	Country Code[2] i	Kind Code[4]	Publication Date	Name of Patentee or Applicant of cited Document	Pages,Columns,Lines where Relevant Passages or Relevant Figures Appear	T[5]
	1							

If you wish to add additional Foreign Patent Document citation information please click the Add button Add

NON-PATENT LITERATURE DOCUMENTS Remove

INFORMATION DISCLOSURE STATEMENT BY APPLICANT (Not for submission under 37 CFR 1.99)	Application Number	14840865
	Filing Date	2015-08-31
	First Named Inventor	Hyun LEE
	Art Unit	2138
	Examiner Name	Stephen C. ELMORE
	Attorney Docket Number	062453-036

Examiner Initials*	Cite No	Include name of the author (in CAPITAL LETTERS), title of the article (when appropriate), title of the item (book, magazine, journal, serial, symposium, catalog, etc), date, pages(s), volume-issue number(s), publisher, city and/or country where published.	T[5]
	1		

If you wish to add additional non-patent literature document citation information please click the Add button Add

EXAMINER SIGNATURE

Examiner Signature		Date Considered	

*EXAMINER: Initial if reference considered, whether or not citation is in conformance with MPEP 609. Draw line through a citation if not in conformance and not considered. Include copy of this form with next communication to applicant.

[1] See Kind Codes of USPTO Patent Documents at www.USPTO.GOV or MPEP 901.04. [2] Enter office that issued the document, by the two-letter code (WIPO Standard ST.3). [3] For Japanese patent documents, the indication of the year of the reign of the Emperor must precede the serial number of the patent document. [4] Kind of document by the appropriate symbols as indicated on the document under WIPO Standard ST.16 if possible. [5] Applicant is to place a check mark here if English language translation is attached.

INFORMATION DISCLOSURE STATEMENT BY APPLICANT (Not for submission under 37 CFR 1.99)		
	Application Number	14840865
	Filing Date	2015-08-31
	First Named Inventor	Hyun LEE
	Art Unit	2138
	Examiner Name	Stephen C. ELMORE
	Attorney Docket Number	062453-036

CERTIFICATION STATEMENT

Please see 37 CFR 1.97 and 1.98 to make the appropriate selection(s):

That each item of information contained in the information disclosure statement was first cited in any communication from a foreign patent office in a counterpart foreign application not more than three months prior to the filing of the information disclosure statement. See 37 CFR 1.97(e)(1).

OR

☐ That no item of information contained in the information disclosure statement was cited in a communication from a foreign patent office in a counterpart foreign application, and, to the knowledge of the person signing the certification after making reasonable inquiry, no item of information contained in the information disclosure statement was known to any individual designated in 37 CFR 1.56(c) more than three months prior to the filing of the information disclosure statement. See 37 CFR 1.97(e)(2).

See attached certification statement.

☒ The fee set forth in 37 CFR 1.17 (p) has been submitted herewith.

☒ A certification statement is not submitted herewith.

SIGNATURE

A signature of the applicant or representative is required in accordance with CFR 1.33, 10.18. Please see CFR 1.4(d) for the form of the signature.

Signature	/Khaled Shami, Reg. No. 38,745/	Date (YYYY-MM-DD)	2016-10-20
Name/Print	Khaled Shami	Registration Number	38,745

This collection of information is required by 37 CFR 1.97 and 1.98. The information is required to obtain or retain a benefit by the public which is to file (and by the USPTO to process) an application. Confidentiality is governed by 35 U.S.C. 122 and 37 CFR 1.14. This collection is estimated to take 1 hour to complete, including gathering, preparing and submitting the completed application form to the USPTO. Time will vary depending upon the individual case. Any comments on the amount of time you require to complete this form and/or suggestions for reducing this burden, should be sent to the Chief Information Officer, U.S. Patent and Trademark Office, U.S. Department of Commerce, P.O. Box 1450, Alexandria, VA 22313-1450. DO NOT SEND FEES OR COMPLETED FORMS TO THIS ADDRESS. **SEND TO: Commissioner for Patents, P.O. Box 1450, Alexandria, VA 22313-1450.**

Privacy Act Statement

The Privacy Act of 1974 (P.L. 93-579) requires that you be given certain information in connection with your submission of the attached form related to a patent application or patent. Accordingly, pursuant to the requirements of the Act, please be advised that: (1) the general authority for the collection of this information is 35 U.S.C. 2(b)(2); (2) furnishing of the information solicited is voluntary; and (3) the principal purpose for which the information is used by the U.S. Patent and Trademark Office is to process and/or examine your submission related to a patent application or patent. If you do not furnish the requested information, the U.S. Patent and Trademark Office may not be able to process and/or examine your submission, which may result in termination of proceedings or abandonment of the application or expiration of the patent.

The information provided by you in this form will be subject to the following routine uses:

1. The information on this form will be treated confidentially to the extent allowed under the Freedom of Information Act (5 U.S.C. 552) and the Privacy Act (5 U.S.C. 552a). Records from this system of records may be disclosed to the Department of Justice to determine whether the Freedom of Information Act requires disclosure of these record s.

2. A record from this system of records may be disclosed, as a routine use, in the course of presenting evidence to a court, magistrate, or administrative tribunal, including disclosures to opposing counsel in the course of settlement negotiations.

3. A record in this system of records may be disclosed, as a routine use, to a Member of Congress submitting a request involving an individual, to whom the record pertains, when the individual has requested assistance from the Member with respect to the subject matter of the record.

4. A record in this system of records may be disclosed, as a routine use, to a contractor of the Agency having need for the information in order to perform a contract. Recipients of information shall be required to comply with the requirements of the Privacy Act of 1974, as amended, pursuant to 5 U.S.C. 552a(m).

5. A record related to an International Application filed under the Patent Cooperation Treaty in this system of records may be disclosed, as a routine use, to the International Bureau of the World Intellectual Property Organization, pursuant to the Patent Cooperation Treaty.

6. A record in this system of records may be disclosed, as a routine use, to another federal agency for purposes of National Security review (35 U.S.C. 181) and for review pursuant to the Atomic Energy Act (42 U.S.C. 218(c)).

7. A record from this system of records may be disclosed, as a routine use, to the Administrator, General Services, or his/her designee, during an inspection of records conducted by GSA as part of that agency's responsibility to recommend improvements in records management practices and programs, under authority of 44 U.S.C. 2904 and 2906. Such disclosure shall be made in accordance with the GSA regulations governing inspection of records for this purpose, and any other relevant (i.e., GSA or Commerce) directive. Such disclosure shall not be used to make determinations about individuals.

8. A record from this system of records may be disclosed, as a routine use, to the public after either publication of the application pursuant to 35 U.S.C. 122(b) or issuance of a patent pursuant to 35 U.S.C. 151. Further, a record may be disclosed, subject to the limitations of 37 CFR 1.14, as a routine use, to the public if the record was filed in an application which became abandoned or in which the proceedings were terminated and which application is referenced by either a published application, an application open to public inspections or an issued patent.

9. A record from this system of records may be disclosed, as a routine use, to a Federal, State, or local law enforcement agency, if the USPTO becomes aware of a violation or potential violation of law or regulation.

Electronic Patent Application Fee Transmittal

Application Number:	14840865
Filing Date:	31-Aug-2015
Title of Invention:	FLASH-DRAM HYBRID MEMORY MODULE
First Named Inventor/Applicant Name:	Hyun Lee
Filer:	Khaled Shami/Sheila M. Mattingly
Attorney Docket Number:	062453-036

Filed as Large Entity

Filing Fees for Utility under 35 USC 111(a)

Description	Fee Code	Quantity	Amount	Sub-Total in USD($)
Basic Filing:				
Pages:				
Claims:				
Miscellaneous-Filing:				
Petition:				
Patent-Appeals-and-Interference:				
Post-Allowance-and-Post-Issuance:				
Extension-of-Time:				

Description	Fee Code	Quantity	Amount	Sub-Total in USD($)
Miscellaneous:				
Submission- Information Disclosure Stmt	1806	1	180	180
		Total in USD ($)		**180**

Electronic Acknowledgement Receipt

EFS ID:	27278548
Application Number:	14840865
International Application Number:	
Confirmation Number:	2445
Title of Invention:	FLASH-DRAM HYBRID MEMORY MODULE
First Named Inventor/Applicant Name:	Hyun Lee
Customer Number:	22204
Filer:	Khaled Shami/Sheila M. Mattingly
Filer Authorized By:	Khaled Shami
Attorney Docket Number:	062453-036
Receipt Date:	20-OCT-2016
Filing Date:	31-AUG-2015
Time Stamp:	17:35:32
Application Type:	Utility under 35 USC 111(a)

Payment information:

Submitted with Payment	yes
Payment Type	DA
Payment was successfully received in RAM	$180
RAM confirmation Number	102116INTEFSW00004472192380
Deposit Account	
Authorized User	
The Director of the USPTO is hereby authorized to charge indicated fees and credit any overpayment as follows:	

File Listing:

Document Number	Document Description	File Name	File Size(Bytes)/ Message Digest	Multi Part /.zip	Pages (if appl.)
1	Information Disclosure Statement (IDS) Form (SB08)	062453_036_IDS.pdf	1120800 887a5ff2e5b948cf553cff6e433a682a445176d4	no	4
Warnings:					
Information:					
2	Fee Worksheet (SB06)	fee-info.pdf	30214 a5fab6095c978497439e4c075befb8e43b94a273	no	2
Warnings:					
Information:					
		Total Files Size (in bytes):	1151014		

This Acknowledgement Receipt evidences receipt on the noted date by the USPTO of the indicated documents, characterized by the applicant, and including page counts, where applicable. It serves as evidence of receipt similar to a Post Card, as described in MPEP 503.

New Applications Under 35 U.S.C. 111
If a new application is being filed and the application includes the necessary components for a filing date (see 37 CFR 1.53(b)-(d) and MPEP 506), a Filing Receipt (37 CFR 1.54) will be issued in due course and the date shown on this Acknowledgement Receipt will establish the filing date of the application.

National Stage of an International Application under 35 U.S.C. 371
If a timely submission to enter the national stage of an international application is compliant with the conditions of 35 U.S.C. 371 and other applicable requirements a Form PCT/DO/EO/903 indicating acceptance of the application as a national stage submission under 35 U.S.C. 371 will be issued in addition to the Filing Receipt, in due course.

New International Application Filed with the USPTO as a Receiving Office
If a new international application is being filed and the international application includes the necessary components for an international filing date (see PCT Article 11 and MPEP 1810), a Notification of the International Application Number and of the International Filing Date (Form PCT/RO/105) will be issued in due course, subject to prescriptions concerning national security, and the date shown on this Acknowledgement Receipt will establish the international filing date of the application.

PTO/SB/06 (09-11)
Approved for use through 1/31/2014. OMB 0651-0032
U.S. Patent and Trademark Office; U.S. DEPARTMENT OF COMMERCE
Under the Paperwork Reduction Act of 1995, no persons are required to respond to a collection of information unless it displays a valid OMB control number.

PATENT APPLICATION FEE DETERMINATION RECORD Substitute for Form PTO-875	Application or Docket Number 14/840,865	Filing Date 08/31/2015	☐ To be Mailed

ENTITY: ☒ LARGE ☐ SMALL ☐ MICRO

APPLICATION AS FILED – PART I

FOR	(Column 1) NUMBER FILED	(Column 2) NUMBER EXTRA	RATE ($)	FEE ($)
☐ BASIC FEE (37 CFR 1.16(a), (b), or (c))	N/A	N/A	N/A	
☐ SEARCH FEE (37 CFR 1.16(k), (i), or (m))	N/A	N/A	N/A	
☐ EXAMINATION FEE (37 CFR 1.16(o), (p), or (q))	N/A	N/A	N/A	
TOTAL CLAIMS (37 CFR 1.16(i))	minus 20 =	*	X $ =	
INDEPENDENT CLAIMS (37 CFR 1.16(h))	minus 3 =	*	X $ =	
☐ APPLICATION SIZE FEE (37 CFR 1.16(s))	If the specification and drawings exceed 100 sheets of paper, the application size fee due is $310 ($155 for small entity) for each additional 50 sheets or fraction thereof. See 35 U.S.C. 41(a)(1)(G) and 37 CFR 1.16(s).			
☐ MULTIPLE DEPENDENT CLAIM PRESENT (37 CFR 1.16(j))				
* If the difference in column 1 is less than zero, enter "0" in column 2.			TOTAL	

APPLICATION AS AMENDED – PART II

AMENDMENT

10/20/2016	(Column 1) CLAIMS REMAINING AFTER AMENDMENT		(Column 2) HIGHEST NUMBER PREVIOUSLY PAID FOR	(Column 3) PRESENT EXTRA	RATE ($)	ADDITIONAL FEE ($)
Total (37 CFR 1.16(i))	* 21	Minus	** 20	= 1	X $80 =	80
Independent (37 CFR 1.16(h))	* 3	Minus	***3	= 0	X $420 =	0
☐ Application Size Fee (37 CFR 1.16(s))						
☐ FIRST PRESENTATION OF MULTIPLE DEPENDENT CLAIM (37 CFR 1.16(j))						
					TOTAL ADD'L FEE	**80**

AMENDMENT

	(Column 1) CLAIMS REMAINING AFTER AMENDMENT		(Column 2) HIGHEST NUMBER PREVIOUSLY PAID FOR	(Column 3) PRESENT EXTRA	RATE ($)	ADDITIONAL FEE ($)
Total (37 CFR 1.16(i))	*	Minus	**	=	X $ =	
Independent (37 CFR 1.16(h))	*	Minus	***	=	X $ =	
☐ Application Size Fee (37 CFR 1.16(s))						
☐ FIRST PRESENTATION OF MULTIPLE DEPENDENT CLAIM (37 CFR 1.16(j))						
					TOTAL ADD'L FEE	

* If the entry in column 1 is less than the entry in column 2, write "0" in column 3.
** If the "Highest Number Previously Paid For" IN THIS SPACE is less than 20, enter "20".
*** If the "Highest Number Previously Paid For" IN THIS SPACE is less than 3, enter "3".
The "Highest Number Previously Paid For" (Total or Independent) is the highest number found in the appropriate box in column 1.

LIE
PARTHENIA D. MERRILL

This collection of information is required by 37 CFR 1.16. The information is required to obtain or retain a benefit by the public which is to file (and by the USPTO to process) an application. Confidentiality is governed by 35 U.S.C. 122 and 37 CFR 1.14. This collection is estimated to take 12 minutes to complete, including gathering, preparing, and submitting the completed application form to the USPTO. Time will vary depending upon the individual case. Any comments on the amount of time you require to complete this form and/or suggestions for reducing this burden, should be sent to the Chief Information Officer, U.S. Patent and Trademark Office, U.S. Department of Commerce, P.O. Box 1450, Alexandria, VA 22313-1450. DO NOT SEND FEES OR COMPLETED FORMS TO THIS ADDRESS. **SEND TO: Commissioner for Patents, P.O. Box 1450, Alexandria, VA 22313-1450.**
If you need assistance in completing the form, call 1-800-PTO-9199 and select option 2.

UNITED STATES PATENT AND TRADEMARK OFFICE

UNITED STATES DEPARTMENT OF COMMERCE
United States Patent and Trademark Office
Address: COMMISSIONER FOR PATENTS
P.O. Box 1450
Alexandria, Virginia 22313-1450
www.uspto.gov

NOTICE OF ALLOWANCE AND FEE(S) DUE

22204 7590 11/18/2016
NIXON PEABODY, LLP
799 Ninth Street, NW
SUITE 500
WASHINGTON, DC 20001

EXAMINER
ELMORE, STEPHEN C

ART UNIT	PAPER NUMBER
2133	

DATE MAILED: 11/18/2016

APPLICATION NO.	FILING DATE	FIRST NAMED INVENTOR	ATTORNEY DOCKET NO.	CONFIRMATION NO.
14/840,865	08/31/2015	Hyun Lee	062453-036	2445

TITLE OF INVENTION: FLASH-DRAM HYBRID MEMORY MODULE

APPLN. TYPE	ENTITY STATUS	ISSUE FEE DUE	PUBLICATION FEE DUE	PREV. PAID ISSUE FEE	TOTAL FEE(S) DUE	DATE DUE
nonprovisional	UNDISCOUNTED	$960	$0	$0	$960	02/21/2017

THE APPLICATION IDENTIFIED ABOVE HAS BEEN EXAMINED AND IS ALLOWED FOR ISSUANCE AS A PATENT. PROSECUTION ON THE MERITS IS CLOSED. THIS NOTICE OF ALLOWANCE IS NOT A GRANT OF PATENT RIGHTS. THIS APPLICATION IS SUBJECT TO WITHDRAWAL FROM ISSUE AT THE INITIATIVE OF THE OFFICE OR UPON PETITION BY THE APPLICANT. SEE 37 CFR 1.313 AND MPEP 1308.

THE ISSUE FEE AND PUBLICATION FEE (IF REQUIRED) MUST BE PAID WITHIN THREE MONTHS FROM THE MAILING DATE OF THIS NOTICE OR THIS APPLICATION SHALL BE REGARDED AS ABANDONED. THIS STATUTORY PERIOD CANNOT BE EXTENDED. SEE 35 U.S.C. 151. THE ISSUE FEE DUE INDICATED ABOVE DOES NOT REFLECT A CREDIT FOR ANY PREVIOUSLY PAID ISSUE FEE IN THIS APPLICATION. IF AN ISSUE FEE HAS PREVIOUSLY BEEN PAID IN THIS APPLICATION (AS SHOWN ABOVE), THE RETURN OF PART B OF THIS FORM WILL BE CONSIDERED A REQUEST TO REAPPLY THE PREVIOUSLY PAID ISSUE FEE TOWARD THE ISSUE FEE NOW DUE.

HOW TO REPLY TO THIS NOTICE:

I. Review the ENTITY STATUS shown above. If the ENTITY STATUS is shown as SMALL or MICRO, verify whether entitlement to that entity status still applies.

If the ENTITY STATUS is the same as shown above, pay the TOTAL FEE(S) DUE shown above.

If the ENTITY STATUS is changed from that shown above, on PART B - FEE(S) TRANSMITTAL, complete section number 5 titled "Change in Entity Status (from status indicated above)".

For purposes of this notice, small entity fees are 1/2 the amount of undiscounted fees, and micro entity fees are 1/2 the amount of small entity fees.

II. PART B - FEE(S) TRANSMITTAL, or its equivalent, must be completed and returned to the United States Patent and Trademark Office (USPTO) with your ISSUE FEE and PUBLICATION FEE (if required). If you are charging the fee(s) to your deposit account, section "4b" of Part B - Fee(s) Transmittal should be completed and an extra copy of the form should be submitted. If an equivalent of Part B is filed, a request to reapply a previously paid issue fee must be clearly made, and delays in processing may occur due to the difficulty in recognizing the paper as an equivalent of Part B.

III. All communications regarding this application must give the application number. Please direct all communications prior to issuance to Mail Stop ISSUE FEE unless advised to the contrary.

IMPORTANT REMINDER: Utility patents issuing on applications filed on or after Dec. 12, 1980 may require payment of maintenance fees. It is patentee's responsibility to ensure timely payment of maintenance fees when due.

PTOL-85 (Rev. 02/11)

Samsung Electronics Co., Ltd.
Ex. 1011, p. 155

PART B - FEE(S) TRANSMITTAL

Complete and send this form, together with applicable fee(s), to: Mail **Mail Stop ISSUE FEE**
Commissioner for Patents
P.O. Box 1450
Alexandria, Virginia 22313-1450
or Fax (571)-273-2885

INSTRUCTIONS: This form should be used for transmitting the ISSUE FEE and PUBLICATION FEE (if required). Blocks 1 through 5 should be completed where appropriate. All further correspondence including the Patent, advance orders and notification of maintenance fees will be mailed to the current correspondence address as indicated unless corrected below or directed otherwise in Block 1, by (a) specifying a new correspondence address; and/or (b) indicating a separate "FEE ADDRESS" for maintenance fee notifications.

CURRENT CORRESPONDENCE ADDRESS (Note: Use Block 1 for any change of address)

22204 7590 11/18/2016
NIXON PEABODY, LLP
799 Ninth Street, NW
SUITE 500
WASHINGTON, DC 20001

Note: A certificate of mailing can only be used for domestic mailings of the Fee(s) Transmittal. This certificate cannot be used for any other accompanying papers. Each additional paper, such as an assignment or formal drawing, must have its own certificate of mailing or transmission.

Certificate of Mailing or Transmission

I hereby certify that this Fee(s) Transmittal is being deposited with the United States Postal Service with sufficient postage for first class mail in an envelope addressed to the Mail Stop ISSUE FEE address above, or being facsimile transmitted to the USPTO (571) 273-2885, on the date indicated below.

(Depositor's name)
(Signature)
(Date)

APPLICATION NO.	FILING DATE	FIRST NAMED INVENTOR	ATTORNEY DOCKET NO.	CONFIRMATION NO.
14/840,865	08/31/2015	Hyun Lee	062453-036	2445

TITLE OF INVENTION: FLASH-DRAM HYBRID MEMORY MODULE

APPLN. TYPE	ENTITY STATUS	ISSUE FEE DUE	PUBLICATION FEE DUE	PREV. PAID ISSUE FEE	TOTAL FEE(S) DUE	DATE DUE
nonprovisional	UNDISCOUNTED	$960	$0	$0	$960	02/21/2017

EXAMINER	ART UNIT	CLASS-SUBCLASS
ELMORE, STEPHEN C	2133	711-103000

1. Change of correspondence address or indication of "Fee Address" (37 CFR 1.363).
- ❑ Change of correspondence address (or Change of Correspondence Address form PTO/SB/122) attached.
- ❑ "Fee Address" indication (or "Fee Address" Indication form PTO/SB/47; Rev 03-02 or more recent) attached. **Use of a Customer Number is required.**

2. For printing on the patent front page, list
(1) The names of up to 3 registered patent attorneys or agents OR, alternatively,
(2) The name of a single firm (having as a member a registered attorney or agent) and the names of up to 2 registered patent attorneys or agents. If no name is listed, no name will be printed.

1_____
2_____
3_____

3. ASSIGNEE NAME AND RESIDENCE DATA TO BE PRINTED ON THE PATENT (print or type)

PLEASE NOTE: Unless an assignee is identified below, no assignee data will appear on the patent. If an assignee is identified below, the document has been filed for recordation as set forth in 37 CFR 3.11. Completion of this form is NOT a substitute for filing an assignment.

(A) NAME OF ASSIGNEE (B) RESIDENCE: (CITY and STATE OR COUNTRY)

Please check the appropriate assignee category or categories (will not be printed on the patent) : ❑ Individual ❑ Corporation or other private group entity ❑ Government

4a. The following fee(s) are submitted:
- ❑ Issue Fee
- ❑ Publication Fee (No small entity discount permitted)
- ❑ Advance Order - # of Copies _____

4b. Payment of Fee(s): **(Please first reapply any previously paid issue fee shown above)**
- ❑ A check is enclosed.
- ❑ Payment by credit card. Form PTO-2038 is attached.
- ❑ The director is hereby authorized to charge the required fee(s), any deficiency, or credits any overpayment, to Deposit Account Number _____ (enclose an extra copy of this form).

5. **Change in Entity Status** (from status indicated above)
- ❑ Applicant certifying micro entity status. See 37 CFR 1.29 — NOTE: Absent a valid certification of Micro Entity Status (see forms PTO/SB/15A and 15B), issue fee payment in the micro entity amount will not be accepted at the risk of application abandonment.
- ❑ Applicant asserting small entity status. See 37 CFR 1.27 — NOTE: If the application was previously under micro entity status, checking this box will be taken to be a notification of loss of entitlement to micro entity status.
- ❑ Applicant changing to regular undiscounted fee status. — NOTE: Checking this box will be taken to be a notification of loss of entitlement to small or micro entity status, as applicable.

NOTE: This form must be signed in accordance with 37 CFR 1.31 and 1.33. See 37 CFR 1.4 for signature requirements and certifications.

Authorized Signature _____ Date _____

Typed or printed name _____ Registration No. _____

PTOL-85 Part B (10-13) Approved for use through 10/31/2013. OMB 0651-0033 U.S. Patent and Trademark Office; U.S. DEPARTMENT OF COMMERCE

Samsung Electronics Co., Ltd.
Ex. 1011, p. 156

UNITED STATES PATENT AND TRADEMARK OFFICE

UNITED STATES DEPARTMENT OF COMMERCE
United States Patent and Trademark Office
Address: COMMISSIONER FOR PATENTS
P.O. Box 1450
Alexandria, Virginia 22313-1450
www.uspto.gov

APPLICATION NO.	FILING DATE	FIRST NAMED INVENTOR	ATTORNEY DOCKET NO.	CONFIRMATION NO.
14/840,865	08/31/2015	Hyun Lee	062453-036	2445

22204 7590 11/18/2016
NIXON PEABODY, LLP
799 Ninth Street, NW
SUITE 500
WASHINGTON, DC 20001

EXAMINER
ELMORE, STEPHEN C

ART UNIT	PAPER NUMBER
2133	

DATE MAILED: 11/18/2016

Determination of Patent Term Adjustment under 35 U.S.C. 154 (b)
(Applications filed on or after May 29, 2000)

The Office has discontinued providing a Patent Term Adjustment (PTA) calculation with the Notice of Allowance.

Section 1(h)(2) of the AIA Technical Corrections Act amended 35 U.S.C. 154(b)(3)(B)(i) to eliminate the requirement that the Office provide a patent term adjustment determination with the notice of allowance. See Revisions to Patent Term Adjustment, 78 Fed. Reg. 19416, 19417 (Apr. 1, 2013). Therefore, the Office is no longer providing an initial patent term adjustment determination with the notice of allowance. The Office will continue to provide a patent term adjustment determination with the Issue Notification Letter that is mailed to applicant approximately three weeks prior to the issue date of the patent, and will include the patent term adjustment on the patent. Any request for reconsideration of the patent term adjustment determination (or reinstatement of patent term adjustment) should follow the process outlined in 37 CFR 1.705.

Any questions regarding the Patent Term Extension or Adjustment determination should be directed to the Office of Patent Legal Administration at (571)-272-7702. Questions relating to issue and publication fee payments should be directed to the Customer Service Center of the Office of Patent Publication at 1-(888)-786-0101 or (571)-272-4200.

PTOL-85 (Rev. 02/11)

Samsung Electronics Co., Ltd.
Ex. 1011, p. 157

OMB Clearance and PRA Burden Statement for PTOL-85 Part B

The Paperwork Reduction Act (PRA) of 1995 requires Federal agencies to obtain Office of Management and Budget approval before requesting most types of information from the public. When OMB approves an agency request to collect information from the public, OMB (i) provides a valid OMB Control Number and expiration date for the agency to display on the instrument that will be used to collect the information and (ii) requires the agency to inform the public about the OMB Control Number's legal significance in accordance with 5 CFR 1320.5(b).

The information collected by PTOL-85 Part B is required by 37 CFR 1.311. The information is required to obtain or retain a benefit by the public which is to file (and by the USPTO to process) an application. Confidentiality is governed by 35 U.S.C. 122 and 37 CFR 1.14. This collection is estimated to take 12 minutes to complete, including gathering, preparing, and submitting the completed application form to the USPTO. Time will vary depending upon the individual case. Any comments on the amount of time you require to complete this form and/or suggestions for reducing this burden, should be sent to the Chief Information Officer, U.S. Patent and Trademark Office, U.S. Department of Commerce, P.O. Box 1450, Alexandria, Virginia 22313-1450. DO NOT SEND FEES OR COMPLETED FORMS TO THIS ADDRESS. SEND TO: Commissioner for Patents, P.O. Box 1450, Alexandria, Virginia 22313-1450. Under the Paperwork Reduction Act of 1995, no persons are required to respond to a collection of information unless it displays a valid OMB control number.

Privacy Act Statement

The Privacy Act of 1974 (P.L. 93-579) requires that you be given certain information in connection with your submission of the attached form related to a patent application or patent. Accordingly, pursuant to the requirements of the Act, please be advised that: (1) the general authority for the collection of this information is 35 U.S.C. 2(b)(2); (2) furnishing of the information solicited is voluntary; and (3) the principal purpose for which the information is used by the U.S. Patent and Trademark Office is to process and/or examine your submission related to a patent application or patent. If you do not furnish the requested information, the U.S. Patent and Trademark Office may not be able to process and/or examine your submission, which may result in termination of proceedings or abandonment of the application or expiration of the patent.

The information provided by you in this form will be subject to the following routine uses:

1. The information on this form will be treated confidentially to the extent allowed under the Freedom of Information Act (5 U.S.C. 552) and the Privacy Act (5 U.S.C 552a). Records from this system of records may be disclosed to the Department of Justice to determine whether disclosure of these records is required by the Freedom of Information Act.
2. A record from this system of records may be disclosed, as a routine use, in the course of presenting evidence to a court, magistrate, or administrative tribunal, including disclosures to opposing counsel in the course of settlement negotiations.
3. A record in this system of records may be disclosed, as a routine use, to a Member of Congress submitting a request involving an individual, to whom the record pertains, when the individual has requested assistance from the Member with respect to the subject matter of the record.
4. A record in this system of records may be disclosed, as a routine use, to a contractor of the Agency having need for the information in order to perform a contract. Recipients of information shall be required to comply with the requirements of the Privacy Act of 1974, as amended, pursuant to 5 U.S.C. 552a(m).
5. A record related to an International Application filed under the Patent Cooperation Treaty in this system of records may be disclosed, as a routine use, to the International Bureau of the World Intellectual Property Organization, pursuant to the Patent Cooperation Treaty.
6. A record in this system of records may be disclosed, as a routine use, to another federal agency for purposes of National Security review (35 U.S.C. 181) and for review pursuant to the Atomic Energy Act (42 U.S.C. 218(c)).
7. A record from this system of records may be disclosed, as a routine use, to the Administrator, General Services, or his/her designee, during an inspection of records conducted by GSA as part of that agency's responsibility to recommend improvements in records management practices and programs, under authority of 44 U.S.C. 2904 and 2906. Such disclosure shall be made in accordance with the GSA regulations governing inspection of records for this purpose, and any other relevant (i.e., GSA or Commerce) directive. Such disclosure shall not be used to make determinations about individuals.
8. A record from this system of records may be disclosed, as a routine use, to the public after either publication of the application pursuant to 35 U.S.C. 122(b) or issuance of a patent pursuant to 35 U.S.C. 151. Further, a record may be disclosed, subject to the limitations of 37 CFR 1.14, as a routine use, to the public if the record was filed in an application which became abandoned or in which the proceedings were terminated and which application is referenced by either a published application, an application open to public inspection or an issued patent.
9. A record from this system of records may be disclosed, as a routine use, to a Federal, State, or local law enforcement agency, if the USPTO becomes aware of a violation or potential violation of law or regulation.

Notice of Allowability	Application No. 14/840,865	Applicant(s) LEE ET AL.	
	Examiner STEPHEN ELMORE	Art Unit 2133	AIA (First Inventor to File) Status No

-- The MAILING DATE of this communication appears on the cover sheet with the correspondence address--

All claims being allowable, PROSECUTION ON THE MERITS IS (OR REMAINS) CLOSED in this application. If not included herewith (or previously mailed), a Notice of Allowance (PTOL-85) or other appropriate communication will be mailed in due course. **THIS NOTICE OF ALLOWABILITY IS NOT A GRANT OF PATENT RIGHTS.** This application is subject to withdrawal from issue at the initiative of the Office or upon petition by the applicant. See 37 CFR 1.313 and MPEP 1308.

1. ☒ This communication is responsive to *the Amendment filed 10/20/2016*.
   ☐ A declaration(s)/affidavit(s) under **37 CFR 1.130(b)** was/were filed on_____.
2. ☐ An election was made by the applicant in response to a restriction requirement set forth during the interview on _____; the restriction requirement and election have been incorporated into this action.
3. ☒ The allowed claim(s) is/are *2-22, renumbered 1-21*. As a result of the allowed claim(s), you may be eligible to benefit from the **Patent Prosecution Highway** program at a participating intellectual property office for the corresponding application. For more information, please see http://www.uspto.gov/patents/init_events/pph/index.jsp or send an inquiry to PPHfeedback@uspto.gov.
4. ☐ Acknowledgment is made of a claim for foreign priority under 35 U.S.C. § 119(a)-(d) or (f).

   Certified copies:

   a) ☐ All b) ☐ Some *c) ☐ None of the:
   1. ☐ Certified copies of the priority documents have been received.
   2. ☐ Certified copies of the priority documents have been received in Application No. _____ .
   3. ☐ Copies of the certified copies of the priority documents have been received in this national stage application from the International Bureau (PCT Rule 17.2(a)).

   * Certified copies not received: _____.

Applicant has THREE MONTHS FROM THE "MAILING DATE" of this communication to file a reply complying with the requirements noted below. Failure to timely comply will result in ABANDONMENT of this application.
THIS THREE-MONTH PERIOD IS NOT EXTENDABLE.

5. ☐ CORRECTED DRAWINGS (as "replacement sheets") must be submitted.
   ☐ including changes required by the attached Examiner's Amendment / Comment or in the Office action of Paper No./Mail Date _____.

   Identifying indicia such as the application number (see 37 CFR 1.84(c)) should be written on the drawings in the front (not the back) of each sheet. Replacement sheet(s) should be labeled as such in the header according to 37 CFR 1.121(d).
6. ☐ DEPOSIT OF and/or INFORMATION about the deposit of BIOLOGICAL MATERIAL must be submitted. Note the attached Examiner's comment regarding REQUIREMENT FOR THE DEPOSIT OF BIOLOGICAL MATERIAL.

Attachment(s)

1. ☒ Notice of References Cited (PTO-892)
2. ☒ Information Disclosure Statements (PTO/SB/08), Paper No./Mail Date 10/20/2016
3. ☐ Examiner's Comment Regarding Requirement for Deposit of Biological Material
4. ☐ Interview Summary (PTO-413), Paper No./Mail Date _____ .
5. ☒ Examiner's Amendment/Comment
6. ☒ Examiner's Statement of Reasons for Allowance
7. ☐ Other _____.

/STEPHEN ELMORE/
Primary Examiner, Art Unit 2133

Samsung Electronics Co., Ltd.
Ex. 1011, p. 159

The present application is being examined under the pre-AIA first to invent provisions.

EXAMINER'S COMMENT, AMENDMENT, and REASONS FOR ALLOWANCE

Priority

1. Applicant claims Domestic Benefit to the following parent patent applications based upon the following continuity claim dependencies:

a. Continuation of prior application 14/489,269 filed 9/17/2014;

b. Continuation of prior application 13/559,476 filed 7/26/2012;

c. Non-provisional 61/512,871 filed 7/28/2011;

d. Continuation-in-part of 12/240,916 filed 6/2/2008;

e. Continuation of 12/131,873 filed June 2, 2008;

f. Non-provisional 60/941,586 filed 6/1/2007.

Applicant's claim for the benefit of a prior-filed application under 35 U.S.C. 119(e) or under 35 U.S.C. 120, 121, 365(c), or 386(c) is acknowledged. However, Applicant has not complied with one or more conditions for receiving the benefit of an earlier filing date under 35 U.S.C. 120 as follows:

The later-filed application must be an application for a patent for an invention which is also disclosed in the prior application (the parent or original non-provisional application or provisional application). The disclosure of the invention in the parent application and in the later-filed application must be sufficient to comply with the requirements of 35 U.S.C. 112(a) or the first paragraph of pre-AIA 35 U.S.C. 112, except for the best mode requirement. See *Transco Products, Inc. v. Performance Contracting, Inc.*, 38 F.3d 551, 32 USPQ2d 1077 (Fed. Cir. 1994).

The disclosures of the prior-filed applications, 1.(d)-(f), i.e., Continuation-in-part of 12/240,916, Continuation of 12/131,873, and Non-provisional of 60/941,586, fail to provide adequate support or enablement in the manner provided by 35 U.S.C. 112(a) or pre-AIA 35 U.S.C. 112, first paragraph for one or more claims of this application.

Specifically, Claims 2-22 of the present application recite the claimed feature "data manager" which lacks proper antecedent basis or clear support under 35 U.S.C. 112(a) or pre-AIA 35 U.S.C. 112, first paragraph in the above identified parent applications, specifically, parent items 1.(d)-(f).

The effective priority date that claims 2-22 are entitled to therefore becomes 7/28/2011 based upon the earliest proper priority claim being that to parent application Non-provisional 61/512,871.

EXAMINER'S AMENDMENT

2. An examiner's amendment to the record appears below. Should the changes and/or additions be unacceptable to applicant, an amendment may be filed as provided by 37 CFR 1.312. To ensure consideration of such an amendment, it MUST be submitted no later than the payment of the issue fee.

The application has been amended as follows to correct an obvious typographical error:

IN THE CLAIMS

In claim 10, line 8, replace "include" with -- includes --.

REASONS FOR ALLOWANCE

3. The following is an examiner's statement of reasons for allowance:

In independent claims 2, 10, and 17 the following features taken **in combination with** the remaining limitations of the independent claim are not found in and/or are not obvious in view of the closest prior art of record, Shan et al., U.S. 2011/0161569 A1, giving the feature "data

manager" the scope of meaning disclosed in the specification, page 26, paragraphs [0087-0088], which identifies the feature "data manager" additionally as element **DMgr 504**,

Claim 2,

"a first volatile memory subsystem coupled to the data manager using a first data bus, the first volatile memory subsystem is operable to communicate data signals with the data manager by way of the first data bus in accordance with the first protocol; a second volatile memory subsystem coupled to the data manager using a second data bus, the second volatile memory subsystem is operable to communicate data signals with the data manager by way of the second data bus in accordance with the first protocol; a non-volatile memory subsystem coupled to the data manager using a third data bus, the non-volatile memory subsystem is operable to communicate data signals with the data manager by way of the third data bus using a second protocol" and *"a controller operable to receive one or more commands from the memory controller of the host system in accordance with the first protocol, and in response to the one or more commands received from the memory controller of the host system, the controller generates and transmits one or more control signals to the data manager, wherein, in response to the one or more control signals, the data manager transfers data between the first volatile memory subsystem and the memory controller of the host system and transfers data signals between the non-volatile memory subsystem and the second volatile memory subsystem";*

Claim 10,

"a data manager coupled to a data manager controller and to the NVM subsystem; a volatile memory (VM) subsystem coupled to a VM controller and to the data manager" and *"a controller operable to receive a command from the memory controller of the host system, the*

controller includes the NVM controller, the VM controller, and the data manager controller, the VM controller is operable (i) to generate and transmit a first command to the VM subsystem in response to the command received from the memory controller of the host system, and (ii) to generate and transmit a second command to the VM subsystem, wherein the second command is generated by the VM controller independently from the command received from the memory controller of the host system, and wherein the controller is operable to direct (i) operation of the NVM subsystem by way of the NVM controller, (ii) operation of the VM subsystem by way of the VM controller, and (iii) operation of the data manager by way of the data manager controller to transfer data between any two or more of the memory controller of the host system, the VM subsystem, and the NVM subsystem based on any one of the first command and the second command";

Claim 17,

"a data manager coupled to a data manager controller and to the NVM subsystem; a volatile memory (VM) subsystem coupled to the data manager" and *"a controller operable to receive a read command from the memory controller of the host system, the controller is configured to determine, in response to the read command, a target address for a requested data, and if requested data is not stored in the VM subsystem, then the controller (i) initiates data transfer operations from the NVM subsystem to the VM subsystem by way of the data manager, and (ii) initiates data transfer operations from the VM subsystem to the memory controller of the host system by way of the data manager."*

Any inquiry concerning this communication or earlier communications from the examiner should be directed to STEPHEN ELMORE whose telephone number is (571)272-4436. The examiner can normally be reached on Mon-Fri from 9:30-5:00.

If attempts to reach the examiner by telephone are unsuccessful, the examiner's supervisor, Jared Rutz can be reached on (571) 272-5535. The fax phone number for the organization where this application or proceeding is assigned is 571-273-8300.

Information regarding the status of an application may be obtained from the Patent Application Information Retrieval (PAIR) system. Status information for published applications may be obtained from either Private PAIR or Public PAIR. Status information for unpublished applications is available through Private PAIR only. For more information about the PAIR system, see http://pair-direct.uspto.gov. Should you have questions on access to the Private PAIR system, contact the Electronic Business Center (EBC) at 866-217-9197 (toll-free). If you would like assistance from a USPTO Customer Service Representative or access to the automated information system, call 800-786-9199 (IN USA OR CANADA) or 571-272-1000.

/STEPHEN ELMORE/
Primary Examiner, Art Unit 2133

November 13, 2016

Notice of References Cited	Application/Control No. 14/840,865	Applicant(s)/Patent Under Reexamination LEE ET AL.	
	Examiner STEPHEN ELMORE	Art Unit 2133	Page 1 of 1

U.S. PATENT DOCUMENTS

*		Document Number Country Code-Number-Kind Code	Date MM-YYYY	Name	CPC Classification	US Classification
*	A	US-7,873,750 B2	01-2011	Yabuta; Keizo	G06F13/4027	709/250
	B	US-				
	C	US-				
	D	US-				
	E	US-				
	F	US-				
	G	US-				
	H	US-				
	I	US-				
	J	US-				
	K	US-				
	L	US-				
	M	US-				

FOREIGN PATENT DOCUMENTS

*		Document Number Country Code-Number-Kind Code	Date MM-YYYY	Country	Name	CPC Classification
	N					
	O					
	P					
	Q					
	R					
	S					
	T					

NON-PATENT DOCUMENTS

*		Include as applicable: Author, Title Date, Publisher, Edition or Volume, Pertinent Pages)
	U	
	V	
	W	
	X	

*A copy of this reference is not being furnished with this Office action. (See MPEP § 707.05(a).)
Dates in MM-YYYY format are publication dates. Classifications may be US or foreign.

Doc code: IDS
Doc description: Information Disclosure Statement (IDS) Filed

PTO/SB/08a (03-15)
Approved for use through 07/31/2016. OMB 0651-0031
U.S. Patent and Trademark Office; U.S. DEPARTMENT OF COMMERCE
Under the Paperwork Reduction Act of 1995, no persons are required to respond to a collection of information unless it contains a valid OMB control number.

INFORMATION DISCLOSURE STATEMENT BY APPLICANT

(Not for submission under 37 CFR 1.99)

Application Number	14840865
Filing Date	2015-08-31
First Named Inventor	Hyun LEE
Art Unit	2138
Examiner Name	Stephen C. ELMORE
Attorney Docket Number	062453-036

U.S.PATENTS Remove

Examiner Initial*	Cite No	Patent Number	Kind Code[1]	Issue Date	Name of Patentee or Applicant of cited Document	Pages,Columns,Lines where Relevant Passages or Relevant Figures Appear
	1	9158684	B2	2015-10-13	Lee et al.	

If you wish to add additional U.S. Patent citation information please click the Add button. Add

U.S.PATENT APPLICATION PUBLICATIONS Remove

Examiner Initial*	Cite No	Publication Number	Kind Code[1]	Publication Date	Name of Patentee or Applicant of cited Document	Pages,Columns,Lines where Relevant Passages or Relevant Figures Appear
	1	20100110748	A1	2010-05-06	Best	
	2	20110161569	A1	2011-06-30	Shan et al.	

If you wish to add additional U.S. Published Application citation information please click the Add button. Add

FOREIGN PATENT DOCUMENTS Remove

Examiner Initial*	Cite No	Foreign Document Number[3]	Country Code[2] i	Kind Code[4]	Publication Date	Name of Patentee or Applicant of cited Document	Pages,Columns,Lines where Relevant Passages or Relevant Figures Appear	T[5]
	1							

If you wish to add additional Foreign Patent Document citation information please click the Add button Add

NON-PATENT LITERATURE DOCUMENTS Remove

ALL REFERENCES CONSIDERED EXCEPT WHERE LINED THROUGH. /S.C.E/

INFORMATION DISCLOSURE STATEMENT BY APPLICANT

(Not for submission under 37 CFR 1.99)

Application Number	14840865
Filing Date	2015-08-31
First Named Inventor	Hyun LEE
Art Unit	2138
Examiner Name	Stephen C. ELMORE
Attorney Docket Number	062453-036

Examiner Initials*	Cite No	Include name of the author (in CAPITAL LETTERS), title of the article (when appropriate), title of the item (book, magazine, journal, serial, symposium, catalog, etc), date, pages(s), volume-issue number(s), publisher, city and/or country where published.	T[5]
	1		

If you wish to add additional non-patent literature document citation information please click the Add button Add

EXAMINER SIGNATURE

Examiner Signature	/STEPHEN C ELMORE/	Date Considered	11/13/2016

*EXAMINER: Initial if reference considered, whether or not citation is in conformance with MPEP 609. Draw line through a citation if not in conformance and not considered. Include copy of this form with next communication to applicant.

[1] See Kind Codes of USPTO Patent Documents at www.USPTO.GOV or MPEP 901.04. [2] Enter office that issued the document, by the two-letter code (WIPO Standard ST.3). [3] For Japanese patent documents, the indication of the year of the reign of the Emperor must precede the serial number of the patent document. [4] Kind of document by the appropriate symbols as indicated on the document under WIPO Standard ST.16 if possible. [5] Applicant is to place a check mark here if English language translation is attached.

ALL REFERENCES CONSIDERED EXCEPT WHERE LINED THROUGH. /S.C.E/

INFORMATION DISCLOSURE STATEMENT BY APPLICANT

(Not for submission under 37 CFR 1.99)

Application Number	14840865
Filing Date	2015-08-31
First Named Inventor	Hyun LEE
Art Unit	2138
Examiner Name	Stephen C. ELMORE
Attorney Docket Number	062453-036

CERTIFICATION STATEMENT

Please see 37 CFR 1.97 and 1.98 to make the appropriate selection(s):

That each item of information contained in the information disclosure statement was first cited in any communication from a foreign patent office in a counterpart foreign application not more than three months prior to the filing of the information disclosure statement. See 37 CFR 1.97(e)(1).

OR

☐ That no item of information contained in the information disclosure statement was cited in a communication from a foreign patent office in a counterpart foreign application, and, to the knowledge of the person signing the certification after making reasonable inquiry, no item of information contained in the information disclosure statement was known to any individual designated in 37 CFR 1.56(c) more than three months prior to the filing of the information disclosure statement. See 37 CFR 1.97(e)(2).

See attached certification statement.

X The fee set forth in 37 CFR 1.17 (p) has been submitted herewith.

X A certification statement is not submitted herewith.

SIGNATURE

A signature of the applicant or representative is required in accordance with CFR 1.33, 10.18. Please see CFR 1.4(d) for the form of the signature.

Signature	/Khaled Shami, Reg. No. 38,745/	Date (YYYY-MM-DD)	2016-10-20
Name/Print	Khaled Shami	Registration Number	38,745

This collection of information is required by 37 CFR 1.97 and 1.98. The information is required to obtain or retain a benefit by the public which is to file (and by the USPTO to process) an application. Confidentiality is governed by 35 U.S.C. 122 and 37 CFR 1.14. This collection is estimated to take 1 hour to complete, including gathering, preparing and submitting the completed application form to the USPTO. Time will vary depending upon the individual case. Any comments on the amount of time you require to complete this form and/or suggestions for reducing this burden, should be sent to the Chief Information Officer, U.S. Patent and Trademark Office, U.S. Department of Commerce, P.O. Box 1450, Alexandria, VA 22313-1450. DO NOT SEND FEES OR COMPLETED FORMS TO THIS ADDRESS. **SEND TO: Commissioner for Patents, P.O. Box 1450, Alexandria, VA 22313-1450.**

ALL REFERENCES CONSIDERED EXCEPT WHERE LINED THROUGH. /S.C.E/

Privacy Act Statement

The Privacy Act of 1974 (P.L. 93-579) requires that you be given certain information in connection with your submission of the attached form related to a patent application or patent. Accordingly, pursuant to the requirements of the Act, please be advised that: (1) the general authority for the collection of this information is 35 U.S.C. 2(b)(2); (2) furnishing of the information solicited is voluntary; and (3) the principal purpose for which the information is used by the U.S. Patent and Trademark Office is to process and/or examine your submission related to a patent application or patent. If you do not furnish the requested information, the U.S. Patent and Trademark Office may not be able to process and/or examine your submission, which may result in termination of proceedings or abandonment of the application or expiration of the patent.

The information provided by you in this form will be subject to the following routine uses:

1. The information on this form will be treated confidentially to the extent allowed under the Freedom of Information Act (5 U.S.C. 552) and the Privacy Act (5 U.S.C. 552a). Records from this system of records may be disclosed to the Department of Justice to determine whether the Freedom of Information Act requires disclosure of these record s.

2. A record from this system of records may be disclosed, as a routine use, in the course of presenting evidence to a court, magistrate, or administrative tribunal, including disclosures to opposing counsel in the course of settlement negotiations.

3. A record in this system of records may be disclosed, as a routine use, to a Member of Congress submitting a request involving an individual, to whom the record pertains, when the individual has requested assistance from the Member with respect to the subject matter of the record.

4. A record in this system of records may be disclosed, as a routine use, to a contractor of the Agency having need for the information in order to perform a contract. Recipients of information shall be required to comply with the requirements of the Privacy Act of 1974, as amended, pursuant to 5 U.S.C. 552a(m).

5. A record related to an International Application filed under the Patent Cooperation Treaty in this system of records may be disclosed, as a routine use, to the International Bureau of the World Intellectual Property Organization, pursuant to the Patent Cooperation Treaty.

6. A record in this system of records may be disclosed, as a routine use, to another federal agency for purposes of National Security review (35 U.S.C. 181) and for review pursuant to the Atomic Energy Act (42 U.S.C. 218(c)).

7. A record from this system of records may be disclosed, as a routine use, to the Administrator, General Services, or his/her designee, during an inspection of records conducted by GSA as part of that agency's responsibility to recommend improvements in records management practices and programs, under authority of 44 U.S.C. 2904 and 2906. Such disclosure shall be made in accordance with the GSA regulations governing inspection of records for this purpose, and any other relevant (i.e., GSA or Commerce) directive. Such disclosure shall not be used to make determinations about individuals.

8. A record from this system of records may be disclosed, as a routine use, to the public after either publication of the application pursuant to 35 U.S.C. 122(b) or issuance of a patent pursuant to 35 U.S.C. 151. Further, a record may be disclosed, subject to the limitations of 37 CFR 1.14, as a routine use, to the public if the record was filed in an application which became abandoned or in which the proceedings were terminated and which application is referenced by either a published application, an application open to public inspections or an issued patent.

9. A record from this system of records may be disclosed, as a routine use, to a Federal, State, or local law enforcement agency, if the USPTO becomes aware of a violation or potential violation of law or regulation.

ALL REFERENCES CONSIDERED EXCEPT WHERE LINED THROUGH. /S.C.E/

UNITED STATES PATENT AND TRADEMARK OFFICE

UNITED STATES DEPARTMENT OF COMMERCE
United States Patent and Trademark Office
Address: COMMISSIONER FOR PATENTS
P.O. Box 1450
Alexandria, Virginia 22313-1450
www.uspto.gov

BIB DATA SHEET

CONFIRMATION NO. 2445

SERIAL NUMBER	FILING or 371(c) DATE	CLASS	GROUP ART UNIT	ATTORNEY DOCKET NO.
14/840,865	08/31/2015 RULE	711	2133	062453-036

APPLICANTS
Netlist, Inc., Irvine, CA;

INVENTORS
Hyun Lee, Ladera Ranch, CA;
Chi-She Chen, Walnut, CA;
Jeffrey C. Solomon, Irvine, CA;
Scott H. Milton, Irvine, CA;
Jayesh Bhakta, Cerritos, CA;

**** CONTINUING DATA ****************************
This application is a CON of 14/489,269 09/17/2014 PAT 9158684
which is a CON of 13/559,476 07/26/2012 PAT 8874831
which claims benefit of 61/512,871 07/28/2011
and is a CIP of 12/240,916 09/29/2008 PAT 8301833
which is a CON of 12/131,873 06/02/2008 ABN
which claims benefit of 60/941,586 06/01/2007

**** FOREIGN APPLICATIONS ****************************

**** IF REQUIRED, FOREIGN FILING LICENSE GRANTED ****
09/14/2015

Foreign Priority claimed ☐ Yes ☑ No 35 USC 119(a-d) conditions met ☐ Yes ☑ No Verified and Acknowledged /STEPHEN C ELMORE/ Examiner's Signature	☐ Met after Allowance Initials	STATE OR COUNTRY	SHEETS DRAWINGS	TOTAL CLAIMS	INDEPENDENT CLAIMS
		CA	10	21	3

ADDRESS

/SE/

NIXON PEABODY, LLP
799 Ninth Street, NW
SUITE 500
WASHINGTON, DC 20001
UNITED STATES

TITLE
FLASH-DRAM HYBRID MEMORY MODULE

FILING FEE RECEIVED		
1820	FEES: Authority has been given in Paper No._____ to charge/credit DEPOSIT ACCOUNT No._____ for following:	☐ All Fees ☐ 1.16 Fees (Filing) ☐ 1.17 Fees (Processing Ext. of time) ☐ 1.18 Fees (Issue) ☐ Other _____ ☐ Credit

BIB (Rev. 05/07).

Search Notes	Application/Control No.	Applicant(s)/Patent Under Reexamination
	14840865	LEE ET AL.
	Examiner	**Art Unit**
	STEPHEN ELMORE	2133

CPC- SEARCHED

Symbol	Date	Examiner
G06F 12/0638; G06F 12/0246; G06F 13/4243; G11C 7/1072; G11C 14/0018;	4/17/2016	SE
Search updated;	11/13/2016	SE
G06F 13/28; G06F 1/185; G06F 3/0613; G06F 3/0659;	11/13/2016	SE
G06F 3/0685; G06F 13/1694; G06F 13/4027;	11/13/2016	SE

CPC COMBINATION SETS - SEARCHED

Symbol	Date	Examiner

US CLASSIFICATION SEARCHED

Class	Subclass	Date	Examiner
711	103, 111, 112, 114, 154, 156	4/17/2016	SE
365	185.33	4/17/2016	SE
Search updated		11/13/2016	SE

SEARCH NOTES

Search Notes	Date	Examiner
EAST	4/17/2016	SE
Inventor Name Search for DP	4/17/2016	SE
Search Updated	11/13/2016	SE
Assignee searched	11/13/2016	SE

INTERFERENCE SEARCH

US Class/ CPC Symbol	US Subclass / CPC Group	Date	Examiner
711	103	11/13/2016	SE
G06F	13/28	11/13/2016	SE

INTERFERENCE SEARCH			
US Class/ CPC Symbol	**US Subclass / CPC Group**	**Date**	**Examiner**
PGPUB Searched		11/13/2016	SE
Assignee Searched		11/13/2016	SE

Samsung Electronics Co., Ltd.
Ex. 1011, p. 172

EAST Search History

EAST Search History (Prior Art)

Ref #	Hits	Search Query	DBs	Default Operator	Plurals	Time Stamp
L1	11580	711/103.ccls.	US-PGPUB; USPAT; USOCR; FPRS; EPO; JPO; IBM_TDB	OR	ON	2016/11/13 11:21
L2	2789	365/185.33.ccls.	US-PGPUB; USPAT; USOCR; FPRS; EPO; JPO; IBM_TDB	OR	ON	2016/11/13 11:21
L3	21373	711/111,112,114,154,156.ccls.	US-PGPUB; USPAT; USOCR; FPRS; EPO; JPO; IBM_TDB	OR	ON	2016/11/13 11:21
L4	33536	L1 or L2 or L3	US-PGPUB; USPAT; USOCR; FPRS; EPO; JPO; IBM_TDB	OR	ON	2016/11/13 11:21
L5	7171	hybrid near3 memory	US-PGPUB; USPAT; USOCR; FPRS; EPO; JPO; IBM_TDB	OR	ON	2016/11/13 11:21
L6	705	data adj manager and controller and memory adj controller	US-PGPUB; USPAT; USOCR; FPRS; EPO; JPO; IBM_TDB	OR	ON	2016/11/13 11:21
L7	18	L5 and L6	US-PGPUB; USPAT;	OR	ON	2016/11/13 11:21

			USOCR; FPRS; EPO; JPO; IBM_TDB			
L8	3	L7 and ((@pd or @ad)<"20120726")	US-PGPUB; USPAT; USOCR; FPRS; EPO; JPO; IBM_TDB	OR	ON	2016/11/13 11:21
L9	2	(US-20070136523-$).did. or (US-8412879-$).did.	US-PGPUB; USPAT	OR	ON	2016/11/13 11:21
L10	194576	(format$3 near3 data) with (transfer or transferred or transferring or move or moved or moving or transmitted or transmission or write or written or writing or store or stored or storing)	US-PGPUB; USPAT; USOCR; FPRS; EPO; JPO; IBM_TDB	OR	ON	2016/11/13 11:21
L11	107	L6 and L10	US-PGPUB; USPAT; USOCR; FPRS; EPO; JPO; IBM_TDB	OR	ON	2016/11/13 11:21
L12	5	L5 and L11	US-PGPUB; USPAT; USOCR; FPRS; EPO; JPO; IBM_TDB	OR	ON	2016/11/13 11:21
L13	6	L4 and L11	US-PGPUB; USPAT; USOCR; FPRS; EPO; JPO; IBM_TDB	OR	ON	2016/11/13 11:21
L14	388	(bi-direction or bi-directional) near3 fabric	US-PGPUB; USPAT; USOCR; FPRS; EPO; JPO; IBM_TDB	OR	ON	2016/11/13 11:21
L15	5	L14 with (data adj manager)	US-PGPUB; USPAT; USOCR; FPRS;	OR	ON	2016/11/13 11:21

			EPO; JPO; IBM_TDB			
L16	26	(data near3 (port or input-output or I/O or IO)) and L11	US-PGPUB; USPAT; USOCR; FPRS; EPO; JPO; IBM_TDB	OR	ON	2016/11/13 11:21
L17	5	L5 and L16	US-PGPUB; USPAT; USOCR; FPRS; EPO; JPO; IBM_TDB	OR	ON	2016/11/13 11:21
L18	15	L16 and ((@pd or @ad)<"20120726")	US-PGPUB; USPAT; USOCR; FPRS; EPO; JPO; IBM_TDB	OR	ON	2016/11/13 11:21
L19	0	L4 and L18	US-PGPUB; USPAT; USOCR; FPRS; EPO; JPO; IBM_TDB	OR	ON	2016/11/13 11:21
L20	15	L6 and L18	US-PGPUB; USPAT; USOCR; FPRS; EPO; JPO; IBM_TDB	OR	ON	2016/11/13 11:21
L21	0	L14 and L20	US-PGPUB; USPAT; USOCR; FPRS; EPO; JPO; IBM_TDB	OR	ON	2016/11/13 11:21
L22	0	L5 and L20	US-PGPUB; USPAT; USOCR; FPRS; EPO; JPO; IBM_TDB	OR	ON	2016/11/13 11:21
L23	36794	(control adj information or control adj data or control adj meta-data or control	US-PGPUB;	OR	ON	2016/11/13 11:21

		adj metadata) near3 controller	USPAT; USOCR; FPRS; EPO; JPO; IBM_TDB			
L24	5	((control adj information or control adj data or control adj meta-data or control adj metadata) near3 controller) and L16	US-PGPUB; USPAT; USOCR; FPRS; EPO; JPO; IBM_TDB	OR	ON	2016/11/13 11:21
L25	3	L6 and L23 and L10 and L4	US-PGPUB; USPAT; USOCR; FPRS; EPO; JPO; IBM_TDB	OR	ON	2016/11/13 11:21
L26	5	L6 and L23 and L10	US-PGPUB; USPAT; USOCR; FPRS; EPO; JPO; IBM_TDB	OR	ON	2016/11/13 11:21
L27	13	L6 and L23	US-PGPUB; USPAT; USOCR; FPRS; EPO; JPO; IBM_TDB	OR	ON	2016/11/13 11:21
L28	7556	((Hyun) near2 (Lee)).INV.	US-PGPUB; USPAT; USOCR	OR	ON	2016/11/13 11:21
L29	25	((Chi-She) near2 (Chen)).INV.	US-PGPUB; USPAT; USOCR	OR	ON	2016/11/13 11:21
L30	111	((Jeffrey) near2 (Solomon)).INV.	US-PGPUB; USPAT; USOCR	OR	ON	2016/11/13 11:21
L31	182	((Scott) near2 (Milton)).INV.	US-PGPUB; USPAT; USOCR	OR	ON	2016/11/13 11:21
L32	100	((Jayesh) near2 (Bhakta)).INV.	US-PGPUB; USPAT; USOCR	OR	ON	2016/11/13 11:21
L33	5	(data adj manager same controller same memory adj controller) and L5 and (L10	US-PGPUB;	OR	ON	2016/11/13 11:21

		or L14)	USPAT; USOCR; FPRS; EPO; JPO; IBM_TDB			
L34	794	(hybrid near3 memory).ti.	US-PGPUB; USPAT; USOCR; FPRS; EPO; JPO; IBM_TDB	OR	ON	2016/11/13 11:21
L35	11	L6 and L34	US-PGPUB; USPAT; USOCR; FPRS; EPO; JPO; IBM_TDB	OR	ON	2016/11/13 11:21
L36	0	L35 and ((@pd or @ad)<"20120726")	US-PGPUB; USPAT; USOCR; FPRS; EPO; JPO; IBM_TDB	OR	ON	2016/11/13 11:21
L37	11	(data adj manager and memory adj controller) and L34	US-PGPUB; USPAT; USOCR; FPRS; EPO; JPO; IBM_TDB	OR	ON	2016/11/13 11:21
L38	0	L37 and ((@pd or @ad)<"20120726")	US-PGPUB; USPAT; USOCR; FPRS; EPO; JPO; IBM_TDB	OR	ON	2016/11/13 11:21
L39	2	(data adj manager) and L34 and ((@pd or @ad)<"20120726")	US-PGPUB; USPAT; USOCR; FPRS; EPO; JPO; IBM_TDB	OR	ON	2016/11/13 11:21
L40	37	("20080195806" | "6658507" | "5675725" | "20040190210" | "6336176" | "7409590" | "20100274953" | "6336174" | "5519663" | "6487623" | "20080104344" | "4420821" | "6799244" | "20020083368" | "4449205" | "8301833" | "7111142" | "20070192627" | "6158015" | "20120204079").PN.	US-PGPUB; USPAT; USOCR; FPRS; EPO; JPO; IBM_TDB	OR	ON	2016/11/13 11:21

L41	1	L6 and L40	US-PGPUB; USPAT; USOCR; FPRS; EPO; JPO; IBM_TDB	OR	ON	2016/11/13 11:21
L42	114	("2043099" | "20030158995" | "20040163027" | "20050044302" | "20050060488" | "20050132250" | "20050141273" | "20060039197" | "20060069896" | "20060080515" | "20060294295" | "20090031099" | "3562555" | "3916390" | "4234920" | "4965828" | "5430742" | "5519831" | "5563839" | "5870350" | "5874995" | "5890192" | "5953215" | "6023421" | "6112310" | "6145068" | "6199142" | "6216247" | "6421279" | "6459647" | "6487102" | "6769081" | "6799241" | "6944042" | "6948029" | "6952368" | "7053470" | "7062618" | "7089412" | "7102391" | "7155627" | "7200021" | "7234099" | "7409491" | "7411859" | "7421552" | "7467251" | "7600142" | "7716411" | "7818488" | "8233303").PN.	US-PGPUB; USPAT; USOCR; FPRS; EPO; JPO; IBM_TDB	OR	ON	2016/11/13 11:21
L43	0	L14 and L42	US-PGPUB; USPAT; USOCR; FPRS; EPO; JPO; IBM_TDB	OR	ON	2016/11/13 11:21
L44	0	L16 and L42	US-PGPUB; USPAT; USOCR; FPRS; EPO; JPO; IBM_TDB	OR	ON	2016/11/13 11:21
L45	0	L6 and L42	US-PGPUB; USPAT; USOCR; FPRS; EPO; JPO; IBM_TDB	OR	ON	2016/11/13 11:21
L46	1	"8874831".pn.	US-PGPUB; USPAT; USOCR; FPRS; EPO; JPO; IBM_TDB	OR	ON	2016/11/13 11:21
L47	8	"8301833".pn.	US-PGPUB;	OR	ON	2016/11/13 11:21

			USPAT; USOCR; FPRS; EPO; JPO; IBM_TDB			
L48	1	(US-8301833-$).did.	USPAT	OR	ON	2016/11/13 11:21
L49	3	L7 and ((@pd or @ad)<"20110728")	US-PGPUB; USPAT; USOCR; FPRS; EPO; JPO; IBM_TDB	OR	ON	2016/11/13 11:21
L50	1	"8874831".pn.	US-PGPUB; USPAT; USOCR; FPRS; EPO; JPO; IBM_TDB	OR	ON	2016/11/13 11:21
L51	82	("20020083368" | "20030158995" | "20040163027" | "20040190210" | "20050044302" | "20050060488" | "20050132250" | "20050141273" | "20060039197" | "20060069896" | "20060080515" | "20060294295" | "20070136523" | "20070192627" | "20080104344" | "20080195806" | "20090031099" | "20100274953" | "20110320804" | "20120204079" | "20140059170" | "2043099" | "3562555" | "3916390" | "4234920" | "4420821" | "4449205" | "4965828" | "5430742" | "5519663" | "5519831" | "5563839" | "5577213" | "5619644" | "5675725" | "5870350" | "5874995" | "5890192" | "5953215" | "6023421" | "6112310" | "6145068" | "6158015" | "6199142" | "6216247" | "6269382" | "6336174" | "6336176" | "6421279" | "6459647" | "6487102" | "6487623" | "6658507" | "6691209" | "6769081" | "6799241" | "6799244" | "6944042" | "6948029" | "6952368" | "7053470" | "7062618" | "7089412" | "7102391" | "7111142" | "7155627" | "7200021" | "7234099" | "7409491" | "7409590" | "7411859" | "7421552" | "7467251" | "7600142" | "7716411" | "7818488" | "8086955" | "8102614" | "8233303" | "8301833" | "8412879").PN.	US-PGPUB; USPAT; USOCR	OR	ON	2016/11/13 11:21
L52	8	"8301833".pn.	US-PGPUB; USPAT; USOCR; FPRS; EPO; JPO;	OR	ON	2016/11/13 11:21

			IBM_TDB			
L53	1	(US-8301833-$).did.	USPAT	OR	ON	2016/11/13 11:21
L54	1	(US-8102614-$).did.	USPAT	OR	ON	2016/11/13 11:21
L55	203	(format$3 near3 data) with (transfer or transferred or transferring or move or moved or moving or transmitted or transmission or write or written or writing or store or stored or storing) same (data adj manager)	US-PGPUB; USPAT; USOCR; FPRS; EPO; JPO; IBM_TDB	OR	ON	2016/11/13 11:21
L56	4	((first adj3 signals) and (second adj3 signals) and (third adj3 signals)) and L55	US-PGPUB; USPAT; USOCR; FPRS; EPO; JPO; IBM_TDB	OR	ON	2016/11/13 11:21
L57	12	((first adj3 signals) and (second adj3 signals) and (third adj3 signals)) and L34	US-PGPUB; USPAT; USOCR; FPRS; EPO; JPO; IBM_TDB	OR	ON	2016/11/13 11:21
L58	8	L57 and ((@pd or @ad)<"20110728")	US-PGPUB; USPAT; USOCR; FPRS; EPO; JPO; IBM_TDB	OR	ON	2016/11/13 11:21
L59	0	L37 and ((@pd or @ad)<"20110728")	US-PGPUB; USPAT; USOCR; FPRS; EPO; JPO; IBM_TDB	OR	ON	2016/11/13 11:21
L60	1426	G06F12/0638.CPC.	US-PGPUB; USPAT; USOCR; FPRS; EPO; JPO; IBM_TDB	OR	ON	2016/11/13 11:21
L61	17059	G06F12/0246.CPC.	US-PGPUB; USPAT; USOCR; FPRS; EPO; JPO; IBM_TDB	OR	ON	2016/11/13 11:21

L62	3169	G06F13/4243.CPC.	US-PGPUB; USPAT; USOCR; FPRS; EPO; JPO; IBM_TDB	OR	ON	2016/11/13 11:21
L63	7236	G11C7/1072.CPC.	US-PGPUB; USPAT; USOCR; FPRS; EPO; JPO; IBM_TDB	OR	ON	2016/11/13 11:21
L64	500	G11C14/0018.CPC.	US-PGPUB; USPAT; USOCR; FPRS; EPO; JPO; IBM_TDB	OR	ON	2016/11/13 11:21
L65	28322	L60 or L61 or L62 or L63 or L64	US-PGPUB; USPAT; USOCR; FPRS; EPO; JPO; IBM_TDB	OR	ON	2016/11/13 11:21
L66	5	L55 and L65	US-PGPUB; USPAT; USOCR; FPRS; EPO; JPO; IBM_TDB	OR	ON	2016/11/13 11:21
L67	0	L66 and ((@pd or @ad)<"20110728")	US-PGPUB; USPAT; USOCR; FPRS; EPO; JPO; IBM_TDB	OR	ON	2016/11/13 11:21
L68	12	L5 and L57	US-PGPUB; USPAT; USOCR; FPRS; EPO; JPO; IBM_TDB	OR	ON	2016/11/13 11:21
L69	3	L6 and L68	US-PGPUB; USPAT; USOCR; FPRS;	OR	ON	2016/11/13 11:21

			EPO; JPO; IBM_TDB			
L70	3	(data adj manager) and L68	US-PGPUB; USPAT; USOCR; FPRS; EPO; JPO; IBM_TDB	OR	ON	2016/11/13 11:21
L71	3	L57 and L65	US-PGPUB; USPAT; USOCR; FPRS; EPO; JPO; IBM_TDB	OR	ON	2016/11/13 11:21
L72	113	(data adj manager) and L65	US-PGPUB; USPAT; USOCR; FPRS; EPO; JPO; IBM_TDB	OR	ON	2016/11/13 11:21
L73	3	((first adj3 signals) and (second adj3 signals) and (third adj3 signals)) and L72	US-PGPUB; USPAT; USOCR; FPRS; EPO; JPO; IBM_TDB	OR	ON	2016/11/13 11:21
L74	10	("9158684" or "8874831" or "8301833").PN.	US-PGPUB; USPAT; USOCR; FPRS; EPO; JPO; IBM_TDB	OR	ON	2016/11/13 11:21
L75	211	("20020083368" | "20020199061" | "20030158995" | "20040088508" | "20040163027" | "20040190210" | "20050044302" | "20050060488" | "20050132250" | "20050141273" | "20060039197" | "20060069896" | "20060080515" | "20060294295" | "20070136523" | "20070192627" | "20080104344" | "20080195806" | "20090031099" | "20100274953" | "20110320804" | "20120204079" | "20120271990" | "20130019076" | "20130086309" | "20130254456" | "20130254497" | "20140059170" | "20140156919" | "20140156920" | "2043099" | "3562555" | "3916390" | "4234920" | "4420821" | "4449205" | "4965828" | "5430742" | "5519663" | "5519831" | "5563839" | "5577213" |	US-PGPUB; USPAT; USOCR; FPRS; EPO; JPO; IBM_TDB	OR	ON	2016/11/13 11:21

		"5619644" | "5675725" | "5870350" | "5874995" | "5890192" | "5953215" | "6023421" | "6112310" | "6145068" | "6158015" | "6199142" | "6216247" | "6269382" | "6336174" | "6336176" | "6421279" | "6459647" | "6487102" | "6487623" | "6658507" | "6691209" | "6721860" | "6769081" | "6799241" | "6799244" | "6816982" | "6944042" | "6948029" | "6952368" | "7053470" | "7062618" | "7089412" | "7102391" | "7111142" | "7155627" | "7200021" | "7234099" | "7353325" | "7409491" | "7409590" | "7411859" | "7421552" | "7467251" | "7600142" | "7716411" | "7818488" | "8086955" | "8102614" | "8233303" | "8301833" | "8407395" | "8412879" | "8516187" | "8671243" | "8677060" | "8874831" | "8880791" | "8904098" | "8904099").PN.				
L76	3	L72 and L75	US-PGPUB; USPAT; USOCR; FPRS; EPO; JPO; IBM_TDB	OR	ON	2016/11/13 11:21
L93	9333	G06F13/28.CPC.	US-PGPUB; USPAT; USOCR; FPRS; EPO; JPO; IBM_TDB	OR	ON	2016/11/13 11:40
L94	2896	G06F1/185.CPC.	US-PGPUB; USPAT; USOCR; FPRS; EPO; JPO; IBM_TDB	OR	ON	2016/11/13 11:40
L95	6474	G06F3/0613.CPC.	US-PGPUB; USPAT; USOCR; FPRS; EPO; JPO; IBM_TDB	OR	ON	2016/11/13 11:40
L96	8802	G06F3/0659.CPC.	US-PGPUB; USPAT; USOCR; FPRS; EPO; JPO; IBM_TDB	OR	ON	2016/11/13 11:40
L97	4068	G06F3/0685.CPC.	US-PGPUB;	OR	ON	2016/11/13 11:41

			USPAT; USOCR; FPRS; EPO; JPO; IBM_TDB			
L98	2174	G06F13/1694.CPC.	US-PGPUB; USPAT; USOCR; FPRS; EPO; JPO; IBM_TDB	OR	ON	2016/11/13 11:41
L99	3977	G06F13/4027.CPC.	US-PGPUB; USPAT; USOCR; FPRS; EPO; JPO; IBM_TDB	OR	ON	2016/11/13 11:41
L101	34040	93 or 94 or 95 or 96 or 97 or 98 or 99	US-PGPUB; USPAT; USOCR; FPRS; EPO; JPO; IBM_TDB	OR	ON	2016/11/13 11:42
L102	227	(data adj manager) and 101	US-PGPUB; USPAT; USOCR; FPRS; EPO; JPO; IBM_TDB	OR	ON	2016/11/13 11:42
L103	27	6 and 102	US-PGPUB; USPAT; USOCR; FPRS; EPO; JPO; IBM_TDB	OR	ON	2016/11/13 11:42
L104	7	((control adj information or control adj data or control adj signal or control adj metadata) near3 controller) and 103	US-PGPUB; USPAT; USOCR; FPRS; EPO; JPO; IBM_TDB	OR	ON	2016/11/13 11:44
L105	2	104 and ((@pd or @ad)<"20110728")	US-PGPUB; USPAT; USOCR; FPRS; EPO; JPO; IBM_TDB	OR	ON	2016/11/13 11:45

L106	0	((read$3 near3 command) with (memory adj controller)) and 105	US-PGPUB; USPAT; USOCR; FPRS; EPO; JPO; IBM_TDB	OR	ON	2016/11/13 11:48
L107	5	((read$3 near3 command) with (memory adj controller)) and 104	US-PGPUB; USPAT; USOCR; FPRS; EPO; JPO; IBM_TDB	OR	ON	2016/11/13 11:48
L108	0	107 and ((@pd or @ad)<"20110728")	US-PGPUB; USPAT; USOCR; FPRS; EPO; JPO; IBM_TDB	OR	ON	2016/11/13 11:48
L109	0	((first adj command) with (second adj command) with (memory adj controller)) and 105	US-PGPUB; USPAT; USOCR; FPRS; EPO; JPO; IBM_TDB	OR	ON	2016/11/13 11:49
L110	4	("20100110748" | "20110161569" | "9158684").PN.	US-PGPUB; USPAT; USOCR; FPRS; EPO; JPO; IBM_TDB	OR	ON	2016/11/13 11:50
L111	3	(US-20110161569-$ or US-20100110748-$).did. or (US-9158684-$).did.	US-PGPUB; USPAT	OR	ON	2016/11/13 11:51
L112	2	((read$3 near3 command) with (memory adj controller)) and 111	US-PGPUB; USPAT; USOCR; FPRS; EPO; JPO; IBM_TDB	OR	ON	2016/11/13 11:52
L113	1	112 and ((@pd or @ad)<"20110728")	US-PGPUB; USPAT; USOCR; FPRS; EPO; JPO; IBM_TDB	OR	ON	2016/11/13 11:52
L114	0	113 and (data adj manager)	US-PGPUB;	OR	ON	2016/11/13 11:54

			USPAT; USOCR; FPRS; EPO; JPO; IBM_TDB			
L115	1	111 and (data adj manager)	US-PGPUB; USPAT; USOCR; FPRS; EPO; JPO; IBM_TDB	OR	ON	2016/11/13 11:54
L116	0	115 and ((@pd or @ad)<"20110728")	US-PGPUB; USPAT; USOCR; FPRS; EPO; JPO; IBM_TDB	OR	ON	2016/11/13 11:55
L125	0	("Netlist, Inc.").AANM.	US-PGPUB; USPAT; USOCR	OR	ON	2016/11/13 11:59
L126	39	("Netlist").AANM.	US-PGPUB; USPAT; USOCR	OR	ON	2016/11/13 11:59
L134	614	((control adj information or control adj data or control adj signal or control adj metadata) near3 controller) and 93	US-PGPUB; USPAT; USOCR; FPRS; EPO; JPO; IBM_TDB	OR	ON	2016/11/13 12:02
L135	5	(data adj manager) and 134	US-PGPUB; USPAT; USOCR; FPRS; EPO; JPO; IBM_TDB	OR	ON	2016/11/13 12:02
L136	0	135 and ((@pd or @ad)<"20110728")	US-PGPUB; USPAT; USOCR; FPRS; EPO; JPO; IBM_TDB	OR	ON	2016/11/13 12:02
L137	31	((read$3 near3 command) with (memory adj controller)) and 134	US-PGPUB; USPAT; USOCR; FPRS; EPO; JPO;	OR	ON	2016/11/13 12:03

			IBM_TDB			
L138	5	(data adj manager) and 137	US-PGPUB; USPAT; USOCR; FPRS; EPO; JPO; IBM_TDB	OR	ON	2016/11/13 12:03
L139	0	138 and ((@pd or @ad)<"20110728")	US-PGPUB; USPAT; USOCR; FPRS; EPO; JPO; IBM_TDB	OR	ON	2016/11/13 12:03

EAST Search History (Interference)

Ref #	Hits	Search Query	DBs	Default Operator	Plurals	Time Stamp
L77	25	((Chi-She) near2 (Chen)).INV.	US-PGPUB; USPAT; UPAD	OR	ON	2016/11/13 11:21
L78	111	((Jeffrey) near2 (Solomon)).INV.	US-PGPUB; USPAT; UPAD	OR	ON	2016/11/13 11:21
L79	138	((Scott) near2 (Milton)).INV.	US-PGPUB; USPAT; UPAD	OR	ON	2016/11/13 11:21
L80	100	((Jayesh) near2 (Bhakta)).INV.	US-PGPUB; USPAT; UPAD	OR	ON	2016/11/13 11:21
L81	7556	((Hyun) near2 (Lee)).INV.	US-PGPUB; USPAT; UPAD	OR	ON	2016/11/13 11:21
L82	7809	L77 or L78 or L79 or L80 or L81	US-PGPUB; USPAT; UPAD	OR	ON	2016/11/13 11:21
L83	12	(data adj manager with controller with memory adj controller).clm.	US-PGPUB; USPAT; UPAD	OR	ON	2016/11/13 11:21
L84	5	L82 and L83	US-PGPUB; USPAT; UPAD	OR	ON	2016/11/13 11:21
L85	13683	(data adj path or memory adj segment).clm.	US-PGPUB; USPAT; UPAD	OR	ON	2016/11/13 11:21
L86	53	L82 and L85	US-	OR	ON	2016/11/13

			PGPUB; USPAT; UPAD			11:21
L87	4	L83 and L86	US-PGPUB; USPAT; UPAD	OR	ON	2016/11/13 11:21
L88	11537	711/103.ccls.	US-PGPUB; USPAT; UPAD	OR	ON	2016/11/13 11:21
L89	1642	(data adj manager).clm.	US-PGPUB; USPAT; UPAD	OR	ON	2016/11/13 11:21
L90	698	G06F12/0638.CPC.	US-PGPUB; USPAT; UPAD	OR	ON	2016/11/13 11:21
L91	21	L82 and L88	US-PGPUB; USPAT; UPAD	OR	ON	2016/11/13 11:21
L92	3	L89 and L91	US-PGPUB; USPAT; UPAD	OR	ON	2016/11/13 11:21
L100	4183	G06F13/28.CPC.	US-PGPUB; USPAT; UPAD	OR	ON	2016/11/13 11:41
L117	11	82 and 100	US-PGPUB; USPAT; UPAD	OR	ON	2016/11/13 11:56
L118	5	83 and 117	US-PGPUB; USPAT; UPAD	OR	ON	2016/11/13 11:56
L119	1159	((read$3 near3 command) with (memory adj controller)).clm.	US-PGPUB; USPAT; UPAD	OR	ON	2016/11/13 11:56
L120	0	118 and 119	US-PGPUB; USPAT; UPAD	OR	ON	2016/11/13 11:57
L121	33867	((control adj information or control adj data or control adj signal or control adj metadata) near3 controller).clm.	US-PGPUB; USPAT; UPAD	OR	ON	2016/11/13 11:57
L122	4	117 and 121	US-PGPUB; USPAT; UPAD	OR	ON	2016/11/13 11:58
L123	4	83 and 122	US-PGPUB; USPAT; UPAD	OR	ON	2016/11/13 11:58

L124	0	123 and ((@pd or @ad)<"20110728")	US-PGPUB; USPAT; UPAD	OR	ON	2016/11/13 11:58
L127	39	("Netlist").AANM.	US-PGPUB; USPAT; UPAD	OR	ON	2016/11/13 11:59
L128	39	82 and 127	US-PGPUB; USPAT; UPAD	OR	ON	2016/11/13 11:59
L129	3	89 and 128	US-PGPUB; USPAT; UPAD	OR	ON	2016/11/13 11:59
L130	0	119 and 129	US-PGPUB; USPAT; UPAD	OR	ON	2016/11/13 12:00
L131	2	121 and 129	US-PGPUB; USPAT; UPAD	OR	ON	2016/11/13 12:00
L132	4	83 and 121	US-PGPUB; USPAT; UPAD	OR	ON	2016/11/13 12:00
L133	2	83 and 131	US-PGPUB; USPAT; UPAD	OR	ON	2016/11/13 12:00

11/13/2016 12:03:50 PM
C:\Users\selmore\Documents\EAST\Workspaces\14840865.wsp

Issue Classification	Application/Control No.	Applicant(s)/Patent Under Reexamination
	14840865	LEE ET AL.
	Examiner	**Art Unit**
	STEPHEN ELMORE	2133

CPC						
Symbol					**Type**	**Version**
G06F		13	/	28	F	2013-01-01
G06F		12	/	0246	I	2013-01-01
G06F		1	/	185	I	2013-01-01
G06F		2212	/	205	A	2013-01-01
G06F		13	/	1694	I	2013-01-01
G06F		12	/	0638	I	2013-01-01
G06F		13	/	4243	I	2013-01-01
G06F		2212	/	7208	A	2013-01-01
G11C		7	/	1072	I	2013-01-01
G11C		14	/	0018	I	2013-01-01
G06F		3	/	0613	I	2013-01-01
G06F		3	/	0659	I	2013-01-01
G06F		3	/	0685	I	2013-01-01
G06F		13	/	4027	I	2013-01-01
			/			

CPC Combination Sets							
Symbol				**Type**	**Set**	**Ranking**	**Version**
			/				
			/				

NONE (Assistant Examiner)	(Date)	**Total Claims Allowed:** 21	
/STEPHEN ELMORE/ Primary Examiner.Art Unit 2133 (Primary Examiner)	11/13/2016 (Date)	O.G. Print Claim(s) 1	O.G. Print Figure 6

Issue Classification	Application/Control No.	Applicant(s)/Patent Under Reexamination
	14840865	LEE ET AL.
	Examiner	**Art Unit**
	STEPHEN ELMORE	2133

US ORIGINAL CLASSIFICATION		INTERNATIONAL CLASSIFICATION									
CLASS	SUBCLASS	CLAIMED					NON-CLAIMED				
711	103	G	0	6	F	13 / 00 (2006.01.01)					

CROSS REFERENCE(S)					
CLASS	SUBCLASS (ONE SUBCLASS PER BLOCK)				
711	111	112	114	154	156
365	185.33				

NONE (Assistant Examiner)	(Date)	Total Claims Allowed: 21	
/STEPHEN ELMORE/ Primary Examiner.Art Unit 2133 (Primary Examiner)	11/13/2016 (Date)	O.G. Print Claim(s) 1	O.G. Print Figure 6

U.S. Patent and Trademark Office

Part of Paper No. 20161113

Issue Classification	Application/Control No.	Applicant(s)/Patent Under Reexamination
	14840865	LEE ET AL.
	Examiner	**Art Unit**
	STEPHEN ELMORE	2133

☒ **Claims renumbered in the same order as presented by applicant** ☐ **CPA** ☐ **T.D.** ☐ **R.1.47**

Final	Original	Final	Original	Final	Original	Final	Original	Final	Original	Final	Original	Final	Original	Final	Original
	2		18												
	3		19												
	4		20												
	5		21												
	6		22												
	7														
	8														
	9														
	10														
	11														
	12														
	13														
	14														
	15														
	16														
	17														

NONE (Assistant Examiner)	(Date)	**Total Claims Allowed:** 21	
/STEPHEN ELMORE/ Primary Examiner.Art Unit 2133 (Primary Examiner)	11/13/2016 (Date)	O.G. Print Claim(s) 1	O.G. Print Figure 6

U.S. Patent and Trademark Office

Part of Paper No. 20161113

PTO/SB/30EFS (07-14)
Approved for use through 07/31/2016. OMB 0651-0031
U.S. Patent and Trademark Office; U.S. DEPARTMENT OF COMMERCE
Under the Paperwork Reduction Act of 1995, no persons are required to respond to a collection of information unless it contains a valid OMB control number.

REQUEST FOR CONTINUED EXAMINATION(RCE)TRANSMITTAL
(Submitted Only via EFS-Web)

Application Number	14/840,865	Filing Date	2015-08-31	Docket Number (if applicable)	062453-000036	Art Unit	2133
First Named Inventor	Hyun LEE			Examiner Name	ELMORE, STEPHEN C		

This is a Request for Continued Examination (RCE) under 37 CFR 1.114 of the above-identified application.
Request for Continued Examination (RCE) practice under 37 CFR 1.114 does not apply to any utility or plant application filed prior to June 8, 1995, to any international application that does not comply with the requirements of 35 U.S.C. 371, or to any design application. The Instruction Sheet for this form is located at WWW.USPTO.GOV.

SUBMISSION REQUIRED UNDER 37 CFR 1.114

Note: If the RCE is proper, any previously filed unentered amendments and amendments enclosed with the RCE will be entered in the order in which they were filed unless applicant instructs otherwise. If applicant does not wish to have any previously filed unentered amendment(s) entered, applicant must request non-entry of such amendment(s).

☐ Previously submitted. If a final Office action is outstanding, any amendments filed after the final Office action may be considered as a submission even if this box is not checked.

- ☐ Consider the arguments in the Appeal Brief or Reply Brief previously filed on _____
- ☐ Other _____

☒ Enclosed

- ☐ Amendment/Reply
- ☒ Information Disclosure Statement (IDS)
- ☐ Affidavit(s)/ Declaration(s)
- ☐ Other _____

MISCELLANEOUS

☐ Suspension of action on the above-identified application is requested under 37 CFR 1.103(c) for a period of months _____
(Period of suspension shall not exceed 3 months; Fee under 37 CFR 1.17(i) required)

☐ Other _____

FEES

☒ **The RCE fee under 37 CFR 1.17(e) is required by 37 CFR 1.114 when the RCE is filed.**
The Director is hereby authorized to charge any underpayment of fees, or credit any overpayments, to Deposit Account No 192380

SIGNATURE OF APPLICANT, ATTORNEY, OR AGENT REQUIRED

☒ Patent Practitioner Signature
Applicant Signature

PTO/SB/30EFS (07-14)
Approved for use through 07/31/2016. OMB 0651-0031
U.S. Patent and Trademark Office; U.S. DEPARTMENT OF COMMERCE
Under the Paperwork Reduction Act of 1995, no persons are required to respond to a collection of information unless it contains a valid OMB control number.

Signature of Registered U.S. Patent Practitioner			
Signature	/Khaled Shami/	Date (YYYY-MM-DD)	2017-02-21
Name	Khaled Shami	Registration Number	38745

This collection of information is required by 37 CFR 1.114. The information is required to obtain or retain a benefit by the public which is to file (and by the USPTO to process) an application. Confidentiality is governed by 35 U.S.C. 122 and 37 CFR 1.11 and 1.14. This collection is estimated to take 12 minutes to complete, including gathering, preparing, and submitting the completed application form to the USPTO. Time will vary depending upon the individual case. Any comments on the amount of time you require to complete this form and/or suggestions for reducing this burden, should be sent to the Chief Information Officer, U.S. Patent and Trademark Office, U.S. Department of Commerce, P.O. Box 1450, Alexandria, VA 22313-1450.

If you need assistance in completing the form, call 1-800-PTO-9199 and select option 2.

Privacy Act Statement

The Privacy Act of 1974 (P.L. 93-579) requires that you be given certain information in connection with your submission of the attached form related to a patent application or patent. Accordingly, pursuant to the requirements of the Act, please be advised that: (1) the general authority for the collection of this information is 35 U.S.C. 2(b)(2); (2) furnishing of the information solicited is voluntary; and (3) the principal purpose for which the information is used by the U.S. Patent and Trademark Office is to process and/or examine your submission related to a patent application or patent. If you do not furnish the requested information, the U.S. Patent and Trademark Office may not be able to process and/or examine your submission, which may result in termination of proceedings or abandonment of the application or expiration of the patent.

The information provided by you in this form will be subject to the following routine uses:

1. The information on this form will be treated confidentially to the extent allowed under the Freedom of Information Act (5 U.S.C. 552) and the Privacy Act (5 U.S.C. 552a). Records from this system of records may be disclosed to the Department of Justice to determine whether the Freedom of Information Act requires disclosure of these records.

2. A record from this system of records may be disclosed, as a routine use, in the course of presenting evidence to a court, magistrate, or administrative tribunal, including disclosures to opposing counsel in the course of settlement negotiations.

3. A record in this system of records may be disclosed, as a routine use, to a Member of Congress submitting a request involving an individual, to whom the record pertains, when the individual has requested assistance from the Member with respect to the subject matter of the record.

4. A record in this system of records may be disclosed, as a routine use, to a contractor of the Agency having need for the information in order to perform a contract. Recipients of information shall be required to comply with the requirements of the Privacy Act of 1974, as amended, pursuant to 5 U.S.C. 552a(m).

5. A record related to an International Application filed under the Patent Cooperation Treaty in this system of records may be disclosed, as a routine use, to the International Bureau of the World Intellectual Property Organization, pursuant to the Patent Cooperation Treaty.

6. A record in this system of records may be disclosed, as a routine use, to another federal agency for purposes of National Security review (35 U.S.C. 181) and for review pursuant to the Atomic Energy Act (42 U.S.C. 218(c)).

7. A record from this system of records may be disclosed, as a routine use, to the Administrator, General Services, or his/her designee, during an inspection of records conducted by GSA as part of that agency's responsibility to recommend improvements in records management practices and programs, under authority of 44 U.S.C. 2904 and 2906. Such disclosure shall be made in accordance with the GSA regulations governing inspection of records for this purpose, and any other relevant (i.e., GSA or Commerce) directive. Such disclosure shall not be used to make determinations about individuals.

8. A record from this system of records may be disclosed, as a routine use, to the public after either publication of the application pursuant to 35 U.S.C. 122(b) or issuance of a patent pursuant to 35 U.S.C. 151. Further, a record may be disclosed, subject to the limitations of 37 CFR 1.14, as a routine use, to the public if the record was filed in an application which became abandoned or in which the proceedings were terminated and which application is referenced by either a published application, an application open to public inspections or an issued patent.

9. A record from this system of records may be disclosed, as a routine use, to a Federal, State, or local law enforcement agency, if the USPTO becomes aware of a violation or potential violation of law or regulation.

PTO/SB/08a (03-15)
Approved for use through 07/31/2016. OMB 0651-0031
U.S. Patent and Trademark Office; U.S. DEPARTMENT OF COMMERCE

Under the Paperwork Reduction Act of 1995, no persons are required to respond to a collection of information unless it contains a valid OMB control number.

INFORMATION DISCLOSURE STATEMENT BY APPLICANT

(Not for submission under 37 CFR 1.99)

Application Number	14840865
Filing Date	2015-08-31
First Named Inventor	LEE, HYUN
Art Unit	2133
Examiner Name	ELMORE, STEPHEN C.
Attorney Docket Number	062453-036

U.S.PATENTS Remove

Examiner Initial*	Cite No	Patent Number	Kind Code[1]	Issue Date	Name of Patentee or Applicant of cited Document	Pages,Columns,Lines where Relevant Passages or Relevant Figures Appear
	1	4882709	A	1989-11-21	WYLAND	
	2	5490155	A	1996-02-06	ABDOO et al.	
	3	5799200	A	1998-08-25	BRANT et al.	
	4	6026465	A	2000-02-15	MILLS et al.	
	5	6065092	A	2000-05-16	ROY	
	6	6571244	B1	2003-05-27	LARSON	
	7	6614685	B2	2003-09-02	WONG	
	8	6693840	B2	2004-02-17	SHIMADA et al.	

INFORMATION DISCLOSURE STATEMENT BY APPLICANT (Not for submission under 37 CFR 1.99)		
	Application Number	14840865
	Filing Date	2015-08-31
	First Named Inventor	LEE, HYUN
	Art Unit	2133
	Examiner Name	ELMORE, STEPHEN C.
	Attorney Docket Number	062453-036

	9	6810513	B1	2006-10-26	VEST	
	10	7136978	B2	2006-11-14	MIURA et al.	
	11	7519754	B2	2009-04-14	WANG et al.	Related to CN 101017460 A (SILICON STORAGE TECH INC) 2007-08-15
	12	9043677	B2	2015-05-26	KONG et al.	
	13	9361250	B2	2016-06-07	SHAN et al.	Related to CN 102110057 A (LANQI SEMICONDUCTOR SHANGHAI CO.,LTD) 2011-06-29

If you wish to add additional U.S. Patent citation information please click the Add button. Add

U.S.PATENT APPLICATION PUBLICATIONS Remove

Examiner Initial*	Cite No	Publication Number	Kind Code[1]	Publication Date	Name of Patentee or Applicant of cited Document	Pages,Columns,Lines where Relevant Passages or Relevant Figures Appear
	1	20020053944	A1	2002-05-09	BRASS et al.	
	2	20030028733	A1	2003-02-06	TSUNODA et al.	
	3	20050249011	A1	2005-11-10	MAEDA	
	4	20050273548	A1	2005-12-08	ROOHPARVAR	

INFORMATION DISCLOSURE STATEMENT BY APPLICANT (Not for submission under 37 CFR 1.99)	Application Number	14840865
	Filing Date	2015-08-31
	First Named Inventor	LEE, HYUN
	Art Unit	2133
	Examiner Name	ELMORE, STEPHEN C.
	Attorney Docket Number	062453-036

	5	20060212651	A1	2006-09-21	ASHMORE	
	6	20070070669	A1	2007-03-29	TSERN	
	7	20070147115	A1	2007-06-28	LIN et al.	
	8	20070255898	A1	2007-11-01	NISHIDE et al.	
	9	20070288683	A1	2007-12-13	PANABAKER et al.	
	10	20080147968	A1	2008-06-19	LEE et al.	
	11	20080235443	A1	2008-09-25	CHOW et al.	
	12	20080291727	A1	2008-11-27	SEO et al.	
	13	20100322020	A1	2010-12-23	KIM	
	14	20110078496	A1	2011-03-31	JEDDELOH	
	15	20120317433	A1	2012-12-13	ELLIS et al.	

INFORMATION DISCLOSURE STATEMENT BY APPLICANT (Not for submission under 37 CFR 1.99)	Application Number	14840865
	Filing Date	2015-08-31
	First Named Inventor	LEE, HYUN
	Art Unit	2133
	Examiner Name	ELMORE, STEPHEN C.
	Attorney Docket Number	062453-036

	16	20140032820	A1	2014-01-30	HARASAWA et al.		
	17	20150058701	A1	2015-02-06	XING et al.		

If you wish to add additional U.S. Published Application citation information please click the Add button. Add

FOREIGN PATENT DOCUMENTS Remove

Examiner Initial*	Cite No	Foreign Document Number[3]	Country Code[2] i	Kind Code[4]	Publication Date	Name of Patentee or Applicant of cited Document	Pages,Columns,Lines where Relevant Passages or Relevant Figures Appear	T[5]
	1							

If you wish to add additional Foreign Patent Document citation information please click the Add button Add

NON-PATENT LITERATURE DOCUMENTS Remove

Examiner Initials*	Cite No	Include name of the author (in CAPITAL LETTERS), title of the article (when appropriate), title of the item (book, magazine, journal, serial, symposium, catalog, etc), date, pages(s), volume-issue number(s), publisher, city and/or country where published.	T[5]
	1	CATSOULIS, "Designing Embedded Hardware: Create New Computers and Devices", O'Reilly Media, Inc. (2005). (67 pages)	
	2	ELMHURST et al., "A 1.8-V 128-Mb 125-MHz Multilevel Cell Flash Memory With Flexible Read While Write", IEEE Journal of Solid-State Circuits 38(11):1929-1933 (2003).	
	3	Extended European Search Report for European Application No. 12 817 751.6, mailed June 9, 2015.	
	4	Final Office Action, dated June 15, 2016, issued in U.S. Patent Application No. 14/489,281, 10 pages.	

INFORMATION DISCLOSURE STATEMENT BY APPLICANT (Not for submission under 37 CFR 1.99)	Application Number	14840865
	Filing Date	2015-08-31
	First Named Inventor	LEE, HYUN
	Art Unit	2133
	Examiner Name	ELMORE, STEPHEN C.
	Attorney Docket Number	062453-036

	5	Notice of Allowance in U.S. Patent Application No. 13/536,173, mailed July 2, 2013.	
	6	Notice of Allowance in U.S. Patent Application No. 13/905,053, mailed December 11, 2013.	
	7	Notice of Allowance in U.S. Patent Application No. 13/905,048, mailed December 19, 2013, 8 pages.	
	8	Notice of Allowance in U.S. Patent Application No. 13/559,476, mailed September 29, 2014.	
	9	Notice of Allowance in U.S. Patent Application No. 14/173,219 dated July 7, 2014.	
	10	Office Action in U.S. Application No. 13/536,176, mailed on April 15, 2013.	
	11	Office Action in U.S. Patent Application No. 14/302,292, mailed December 21, 2015.	
	12	Petition for Inter Partes Review of U.S. Patent No. 8,301,833, filed September 29, 2008.	
	13	PATTERSON et al., "Computer Organization & Design: The Hardware/Software Interface" Morgan Kaufmann Publishers, Inc. (1998).	
	14	Petition for Inter Partes Review of U.S. Patent No. 8,874,831, filed July 26, 2012.	
	15	Petition for Inter Partes Review of U.S. Patent No. 8,671,243, filed May 29, 2013.	

INFORMATION DISCLOSURE STATEMENT BY APPLICANT (Not for submission under 37 CFR 1.99)	Application Number	14840865
	Filing Date	2015-08-31
	First Named Inventor	LEE, HYUN
	Art Unit	2133
	Examiner Name	ELMORE, STEPHEN C.
	Attorney Docket Number	062453-036

	16	Restriction Requirement in U.S. Patent Application No. 12/240,916, mailed March 31, 2011.	

If you wish to add additional non-patent literature document citation information please click the Add button Add

EXAMINER SIGNATURE

Examiner Signature		Date Considered	

*EXAMINER: Initial if reference considered, whether or not citation is in conformance with MPEP 609. Draw line through a citation if not in conformance and not considered. Include copy of this form with next communication to applicant.

[1] See Kind Codes of USPTO Patent Documents at www.USPTO.GOV or MPEP 901.04. [2] Enter office that issued the document, by the two-letter code (WIPO Standard ST.3). [3] For Japanese patent documents, the indication of the year of the reign of the Emperor must precede the serial number of the patent document. [4] Kind of document by the appropriate symbols as indicated on the document under WIPO Standard ST.16 if possible. [5] Applicant is to place a check mark here if English language translation is attached.

INFORMATION DISCLOSURE STATEMENT BY APPLICANT (Not for submission under 37 CFR 1.99)		
	Application Number	14840865
	Filing Date	2015-08-31
	First Named Inventor	LEE, HYUN
	Art Unit	2133
	Examiner Name	ELMORE, STEPHEN C.
	Attorney Docket Number	062453-036

CERTIFICATION STATEMENT

Please see 37 CFR 1.97 and 1.98 to make the appropriate selection(s):

That each item of information contained in the information disclosure statement was first cited in any communication from a foreign patent office in a counterpart foreign application not more than three months prior to the filing of the information disclosure statement. See 37 CFR 1.97(e)(1).

OR

☐ That no item of information contained in the information disclosure statement was cited in a communication from a foreign patent office in a counterpart foreign application, and, to the knowledge of the person signing the certification after making reasonable inquiry, no item of information contained in the information disclosure statement was known to any individual designated in 37 CFR 1.56(c) more than three months prior to the filing of the information disclosure statement. See 37 CFR 1.97(e)(2).

See attached certification statement.

The fee set forth in 37 CFR 1.17 (p) has been submitted herewith.

☒ A certification statement is not submitted herewith.

SIGNATURE

A signature of the applicant or representative is required in accordance with CFR 1.33, 10.18. Please see CFR 1.4(d) for the form of the signature.

Signature	/Khaled Shami/	Date (YYYY-MM-DD)	2017-02-21
Name/Print	Khaled Shami	Registration Number	38,745

This collection of information is required by 37 CFR 1.97 and 1.98. The information is required to obtain or retain a benefit by the public which is to file (and by the USPTO to process) an application. Confidentiality is governed by 35 U.S.C. 122 and 37 CFR 1.14. This collection is estimated to take 1 hour to complete, including gathering, preparing and submitting the completed application form to the USPTO. Time will vary depending upon the individual case. Any comments on the amount of time you require to complete this form and/or suggestions for reducing this burden, should be sent to the Chief Information Officer, U.S. Patent and Trademark Office, U.S. Department of Commerce, P.O. Box 1450, Alexandria, VA 22313-1450. DO NOT SEND FEES OR COMPLETED FORMS TO THIS ADDRESS. **SEND TO: Commissioner for Patents, P.O. Box 1450, Alexandria, VA 22313-1450.**

Privacy Act Statement

The Privacy Act of 1974 (P.L. 93-579) requires that you be given certain information in connection with your submission of the attached form related to a patent application or patent. Accordingly, pursuant to the requirements of the Act, please be advised that: (1) the general authority for the collection of this information is 35 U.S.C. 2(b)(2); (2) furnishing of the information solicited is voluntary; and (3) the principal purpose for which the information is used by the U.S. Patent and Trademark Office is to process and/or examine your submission related to a patent application or patent. If you do not furnish the requested information, the U.S. Patent and Trademark Office may not be able to process and/or examine your submission, which may result in termination of proceedings or abandonment of the application or expiration of the patent.

The information provided by you in this form will be subject to the following routine uses:

1. The information on this form will be treated confidentially to the extent allowed under the Freedom of Information Act (5 U.S.C. 552) and the Privacy Act (5 U.S.C. 552a). Records from this system of records may be disclosed to the Department of Justice to determine whether the Freedom of Information Act requires disclosure of these record s.

2. A record from this system of records may be disclosed, as a routine use, in the course of presenting evidence to a court, magistrate, or administrative tribunal, including disclosures to opposing counsel in the course of settlement negotiations.

3. A record in this system of records may be disclosed, as a routine use, to a Member of Congress submitting a request involving an individual, to whom the record pertains, when the individual has requested assistance from the Member with respect to the subject matter of the record.

4. A record in this system of records may be disclosed, as a routine use, to a contractor of the Agency having need for the information in order to perform a contract. Recipients of information shall be required to comply with the requirements of the Privacy Act of 1974, as amended, pursuant to 5 U.S.C. 552a(m).

5. A record related to an International Application filed under the Patent Cooperation Treaty in this system of records may be disclosed, as a routine use, to the International Bureau of the World Intellectual Property Organization, pursuant to the Patent Cooperation Treaty.

6. A record in this system of records may be disclosed, as a routine use, to another federal agency for purposes of National Security review (35 U.S.C. 181) and for review pursuant to the Atomic Energy Act (42 U.S.C. 218(c)).

7. A record from this system of records may be disclosed, as a routine use, to the Administrator, General Services, or his/her designee, during an inspection of records conducted by GSA as part of that agency's responsibility to recommend improvements in records management practices and programs, under authority of 44 U.S.C. 2904 and 2906. Such disclosure shall be made in accordance with the GSA regulations governing inspection of records for this purpose, and any other relevant (i.e., GSA or Commerce) directive. Such disclosure shall not be used to make determinations about individuals.

8. A record from this system of records may be disclosed, as a routine use, to the public after either publication of the application pursuant to 35 U.S.C. 122(b) or issuance of a patent pursuant to 35 U.S.C. 151. Further, a record may be disclosed, subject to the limitations of 37 CFR 1.14, as a routine use, to the public if the record was filed in an application which became abandoned or in which the proceedings were terminated and which application is referenced by either a published application, an application open to public inspections or an issued patent.

9. A record from this system of records may be disclosed, as a routine use, to a Federal, State, or local law enforcement agency, if the USPTO becomes aware of a violation or potential violation of law or regulation.

Electronic Patent Application Fee Transmittal

Application Number:	14840865
Filing Date:	31-Aug-2015
Title of Invention:	FLASH-DRAM HYBRID MEMORY MODULE
First Named Inventor/Applicant Name:	Hyun Lee
Filer:	Khaled Shami/Jacqueline Allen
Attorney Docket Number:	062453-036

Filed as Large Entity

Filing Fees for Utility under 35 USC 111(a)

Description	Fee Code	Quantity	Amount	Sub-Total in USD($)
Basic Filing:				
Pages:				
Claims:				
Miscellaneous-Filing:				
Petition:				
Patent-Appeals-and-Interference:				
Post-Allowance-and-Post-Issuance:				
Extension-of-Time:				

Description	Fee Code	Quantity	Amount	Sub-Total in USD($)
Miscellaneous:				
RCE- 1st Request	1801	1	1200	1200
		Total in USD ($)		**1200**

Electronic Acknowledgement Receipt

EFS ID:	28416999
Application Number:	14840865
International Application Number:	
Confirmation Number:	2445
Title of Invention:	FLASH-DRAM HYBRID MEMORY MODULE
First Named Inventor/Applicant Name:	Hyun Lee
Customer Number:	22204
Filer:	Khaled Shami/Jacqueline Allen
Filer Authorized By:	Khaled Shami
Attorney Docket Number:	062453-036
Receipt Date:	21-FEB-2017
Filing Date:	31-AUG-2015
Time Stamp:	16:17:23
Application Type:	Utility under 35 USC 111(a)

Payment information:

Submitted with Payment	yes
Payment Type	DA
Payment was successfully received in RAM	$1200
RAM confirmation Number	022217INTEFSW00003805192380
Deposit Account	
Authorized User	
The Director of the USPTO is hereby authorized to charge indicated fees and credit any overpayment as follows:	

File Listing:

Document Number	Document Description	File Name	File Size(Bytes)/ Message Digest	Multi Part /.zip	Pages (if appl.)
1	Request for Continued Examination (RCE)	062453-036_RCE.pdf	1364852 145008cdbac8ce8873a855ab435110e1e21d1d68	no	3
Warnings:					
Information:					
2	Information Disclosure Statement (IDS) Form (SB08)	062453-036_IDS.pdf	1061597 8b611629a7b7e9b7cbb0d7b41cd073f5dc8bcb85	no	8
Warnings:					
Information:					
3	Non Patent Literature	NPL_Catsoulis_2005.pdf	26009454 fbff0dcab8bca957846959755d583f84b2533f72	no	67
Warnings:					
Information:					
4	Non Patent Literature	NPL_Elmhurst_2003_1929.pdf	644893 b18b5188ef5ac1d4d7e9347bfafbbbf01136eb03	no	5
Warnings:					
Information:					
5	Non Patent Literature	NPL_Petition_8301833_1_and_2new.pdf	941788 280866d0c7ff97a2485a1c83dd9419c94964f4c0	no	73
Warnings:					
Information:					
6	Non Patent Literature	NPL_Petition_8671243_1_and_2new.pdf	2385310 8a0a67b6ca0b5c3e3d6448d599ca53c09e84d97d	no	85
Warnings:					
Information:					

7	Non Patent Literature	NPL_Petitioner_8874831_1_and_2new.pdf	1894705 f4a0a0e60a6a074187be2614267a2df9ff8d981f	no	81
Warnings:					
Information:					
8	Non Patent Literature	NPL_Patterson_1998.pdf	14503482 af5a0494e64b877707d19ca7984f6b2773bdf1c0	no	71
Warnings:					
Information:					
9	Fee Worksheet (SB06)	fee-info.pdf	30078 d81c65ff993ee019a0fa01621784b762e09020e0	no	2
Warnings:					
Information:					
			Total Files Size (in bytes):	48836159	

This Acknowledgement Receipt evidences receipt on the noted date by the USPTO of the indicated documents, characterized by the applicant, and including page counts, where applicable. It serves as evidence of receipt similar to a Post Card, as described in MPEP 503.

<u>New Applications Under 35 U.S.C. 111</u>
If a new application is being filed and the application includes the necessary components for a filing date (see 37 CFR 1.53(b)-(d) and MPEP 506), a Filing Receipt (37 CFR 1.54) will be issued in due course and the date shown on this Acknowledgement Receipt will establish the filing date of the application.

<u>National Stage of an International Application under 35 U.S.C. 371</u>
If a timely submission to enter the national stage of an international application is compliant with the conditions of 35 U.S.C. 371 and other applicable requirements a Form PCT/DO/EO/903 indicating acceptance of the application as a national stage submission under 35 U.S.C. 371 will be issued in addition to the Filing Receipt, in due course.

<u>New International Application Filed with the USPTO as a Receiving Office</u>
If a new international application is being filed and the international application includes the necessary components for an international filing date (see PCT Article 11 and MPEP 1810), a Notification of the International Application Number and of the International Filing Date (Form PCT/RO/105) will be issued in due course, subject to prescriptions concerning national security, and the date shown on this Acknowledgement Receipt will establish the international filing date of the application.

Doc code: IDS
Doc description: Information Disclosure Statement (IDS) Filed

PTO/SB/08a (03-15)
Approved for use through 07/31/2016. OMB 0651-0031
U.S. Patent and Trademark Office; U.S. DEPARTMENT OF COMMERCE
Under the Paperwork Reduction Act of 1995, no persons are required to respond to a collection of information unless it contains a valid OMB control number.

INFORMATION DISCLOSURE STATEMENT BY APPLICANT

(Not for submission under 37 CFR 1.99)

Application Number	14840865
Filing Date	2015-08-31
First Named Inventor	LEE, HYUN
Art Unit	2133
Examiner Name	ELMORE, STEPHEN C.
Attorney Docket Number	062453-036

U.S.PATENTS Remove

Examiner Initial*	Cite No	Patent Number	Kind Code[1]	Issue Date	Name of Patentee or Applicant of cited Document	Pages,Columns,Lines where Relevant Passages or Relevant Figures Appear
	1					

If you wish to add additional U.S. Patent citation information please click the Add button. Add

U.S.PATENT APPLICATION PUBLICATIONS Remove

Examiner Initial*	Cite No	Publication Number	Kind Code[1]	Publication Date	Name of Patentee or Applicant of cited Document	Pages,Columns,Lines where Relevant Passages or Relevant Figures Appear
	1					

If you wish to add additional U.S. Published Application citation information please click the Add button. Add

FOREIGN PATENT DOCUMENTS Remove

Examiner Initial*	Cite No	Foreign Document Number[3]	Country Code[2] i	Kind Code[4]	Publication Date	Name of Patentee or Applicant of cited Document	Pages,Columns,Lines where Relevant Passages or Relevant Figures Appear	T[5]
	1							

If you wish to add additional Foreign Patent Document citation information please click the Add button Add

NON-PATENT LITERATURE DOCUMENTS Remove

Examiner Initials*	Cite No	Include name of the author (in CAPITAL LETTERS), title of the article (when appropriate), title of the item (book, magazine, journal, serial, symposium, catalog, etc), date, pages(s), volume-issue number(s), publisher, city and/or country where published.	T[5]

EFS Web 2.1.17

INFORMATION DISCLOSURE STATEMENT BY APPLICANT (Not for submission under 37 CFR 1.99)		
	Application Number	14840865
	Filing Date	2015-08-31
	First Named Inventor	LEE, HYUN
	Art Unit	2133
	Examiner Name	ELMORE, STEPHEN C.
	Attorney Docket Number	062453-036

	1	File History 12/240,916 filed September 29, 2008	
	2	Bonella, Provisional Application for "ADVANCED DYNAMIC DISK MEMORY MODULE", 53 pages.	
	3	File History US Patent No. 8,671,243	
	4	Intel 1.8 Volt Intel StrataFlash Wireless Memory (L18).	
	5	Provisional Application No. 60/941,586 filed June 1, 2007	
	6	JEDEC STANDARD, Double Data Rate (DDR) SDRAM Specification, JESD79, June 2000, 77 pages	
	7	JEDEC STANDARD, DDR2 SDRAM Specification, JESD79-2B (Revision of JESD79-2A) January 2005, 113 pages.	
	8	Microsoft Computer Dictionary Fifth Edition, 10 pages.	
	9	Microsoft Windows 2000 Professional Resource Kit, 76 pages.	
	10	Data Sheet, 74F257A Quad 2-line to 1-line selector/multiplexer, non-inverting (3-State), Product specification, IC15 Data Handbook 1995 Mar 31, 10 pages.	
	11	Ex. 1004 - IPR2017-00587 Ron Maltiel CV, 7 pages.	

INFORMATION DISCLOSURE STATEMENT BY APPLICANT (Not for submission under 37 CFR 1.99)	Application Number	14840865
	Filing Date	2015-08-31
	First Named Inventor	LEE, HYUN
	Art Unit	2133
	Examiner Name	ELMORE, STEPHEN C.
	Attorney Docket Number	062453-036

	12	Provisional Application No. 60/912,321 filed April 17, 2007	

If you wish to add additional non-patent literature document citation information please click the Add button Add

EXAMINER SIGNATURE

Examiner Signature		Date Considered	

*EXAMINER: Initial if reference considered, whether or not citation is in conformance with MPEP 609. Draw line through a citation if not in conformance and not considered. Include copy of this form with next communication to applicant.

[1] See Kind Codes of USPTO Patent Documents at www.USPTO.GOV or MPEP 901.04. [2] Enter office that issued the document, by the two-letter code (WIPO Standard ST.3). [3] For Japanese patent documents, the indication of the year of the reign of the Emperor must precede the serial number of the patent document. [4] Kind of document by the appropriate symbols as indicated on the document under WIPO Standard ST.16 if possible. [5] Applicant is to place a check mark here if English language translation is attached.

INFORMATION DISCLOSURE STATEMENT BY APPLICANT (Not for submission under 37 CFR 1.99)	Application Number	14840865
	Filing Date	2015-08-31
	First Named Inventor	LEE, HYUN
	Art Unit	2133
	Examiner Name	ELMORE, STEPHEN C.
	Attorney Docket Number	062453-036

CERTIFICATION STATEMENT

Please see 37 CFR 1.97 and 1.98 to make the appropriate selection(s):

That each item of information contained in the information disclosure statement was first cited in any communication from a foreign patent office in a counterpart foreign application not more than three months prior to the filing of the information disclosure statement. See 37 CFR 1.97(e)(1).

OR

☐ That no item of information contained in the information disclosure statement was cited in a communication from a foreign patent office in a counterpart foreign application, and, to the knowledge of the person signing the certification after making reasonable inquiry, no item of information contained in the information disclosure statement was known to any individual designated in 37 CFR 1.56(c) more than three months prior to the filing of the information disclosure statement. See 37 CFR 1.97(e)(2).

See attached certification statement.

The fee set forth in 37 CFR 1.17 (p) has been submitted herewith.

☒ A certification statement is not submitted herewith.

SIGNATURE

A signature of the applicant or representative is required in accordance with CFR 1.33, 10.18. Please see CFR 1.4(d) for the form of the signature.

Signature	/Khaled Shami/	Date (YYYY-MM-DD)	2017-04-20
Name/Print	Khaled Shami	Registration Number	38,745

This collection of information is required by 37 CFR 1.97 and 1.98. The information is required to obtain or retain a benefit by the public which is to file (and by the USPTO to process) an application. Confidentiality is governed by 35 U.S.C. 122 and 37 CFR 1.14. This collection is estimated to take 1 hour to complete, including gathering, preparing and submitting the completed application form to the USPTO. Time will vary depending upon the individual case. Any comments on the amount of time you require to complete this form and/or suggestions for reducing this burden, should be sent to the Chief Information Officer, U.S. Patent and Trademark Office, U.S. Department of Commerce, P.O. Box 1450, Alexandria, VA 22313-1450. DO NOT SEND FEES OR COMPLETED FORMS TO THIS ADDRESS. **SEND TO: Commissioner for Patents, P.O. Box 1450, Alexandria, VA 22313-1450.**

Privacy Act Statement

The Privacy Act of 1974 (P.L. 93-579) requires that you be given certain information in connection with your submission of the attached form related to a patent application or patent. Accordingly, pursuant to the requirements of the Act, please be advised that: (1) the general authority for the collection of this information is 35 U.S.C. 2(b)(2); (2) furnishing of the information solicited is voluntary; and (3) the principal purpose for which the information is used by the U.S. Patent and Trademark Office is to process and/or examine your submission related to a patent application or patent. If you do not furnish the requested information, the U.S. Patent and Trademark Office may not be able to process and/or examine your submission, which may result in termination of proceedings or abandonment of the application or expiration of the patent.

The information provided by you in this form will be subject to the following routine uses:

1. The information on this form will be treated confidentially to the extent allowed under the Freedom of Information Act (5 U.S.C. 552) and the Privacy Act (5 U.S.C. 552a). Records from this system of records may be disclosed to the Department of Justice to determine whether the Freedom of Information Act requires disclosure of these record s.

2. A record from this system of records may be disclosed, as a routine use, in the course of presenting evidence to a court, magistrate, or administrative tribunal, including disclosures to opposing counsel in the course of settlement negotiations.

3. A record in this system of records may be disclosed, as a routine use, to a Member of Congress submitting a request involving an individual, to whom the record pertains, when the individual has requested assistance from the Member with respect to the subject matter of the record.

4. A record in this system of records may be disclosed, as a routine use, to a contractor of the Agency having need for the information in order to perform a contract. Recipients of information shall be required to comply with the requirements of the Privacy Act of 1974, as amended, pursuant to 5 U.S.C. 552a(m).

5. A record related to an International Application filed under the Patent Cooperation Treaty in this system of records may be disclosed, as a routine use, to the International Bureau of the World Intellectual Property Organization, pursuant to the Patent Cooperation Treaty.

6. A record in this system of records may be disclosed, as a routine use, to another federal agency for purposes of National Security review (35 U.S.C. 181) and for review pursuant to the Atomic Energy Act (42 U.S.C. 218(c)).

7. A record from this system of records may be disclosed, as a routine use, to the Administrator, General Services, or his/her designee, during an inspection of records conducted by GSA as part of that agency's responsibility to recommend improvements in records management practices and programs, under authority of 44 U.S.C. 2904 and 2906. Such disclosure shall be made in accordance with the GSA regulations governing inspection of records for this purpose, and any other relevant (i.e., GSA or Commerce) directive. Such disclosure shall not be used to make determinations about individuals.

8. A record from this system of records may be disclosed, as a routine use, to the public after either publication of the application pursuant to 35 U.S.C. 122(b) or issuance of a patent pursuant to 35 U.S.C. 151. Further, a record may be disclosed, subject to the limitations of 37 CFR 1.14, as a routine use, to the public if the record was filed in an application which became abandoned or in which the proceedings were terminated and which application is referenced by either a published application, an application open to public inspections or an issued patent.

9. A record from this system of records may be disclosed, as a routine use, to a Federal, State, or local law enforcement agency, if the USPTO becomes aware of a violation or potential violation of law or regulation.

Electronic Acknowledgement Receipt

EFS ID:	28976069
Application Number:	14840865
International Application Number:	
Confirmation Number:	2445
Title of Invention:	FLASH-DRAM HYBRID MEMORY MODULE
First Named Inventor/Applicant Name:	Hyun Lee
Customer Number:	22204
Filer:	Khaled Shami
Filer Authorized By:	
Attorney Docket Number:	062453-036
Receipt Date:	20-APR-2017
Filing Date:	31-AUG-2015
Time Stamp:	14:21:37
Application Type:	Utility under 35 USC 111(a)

Payment information:

Submitted with Payment	no

File Listing:

Document Number	Document Description	File Name	File Size(Bytes)/ Message Digest	Multi Part /.zip	Pages (if appl.)
1	Information Disclosure Statement (IDS) Form (SB08)	062453-036_SB08.pdf	1099799 7989dfc192c8b53133609ce96644a1372a573d88	no	5

Warnings:

Information:					
A U.S. Patent Number Citation or a U.S. Publication Number Citation is required in the Information Disclosure Statement (IDS) form for autoloading of data into USPTO systems. You may remove the form to add the required data in order to correct the Informational Message if you are citing U.S. References. If you chose not to include U.S. References, the image of the form will be processed and be made available within the Image File Wrapper (IFW) system. However, no data will be extracted from this form. Any additional data such as Foreign Patent Documents or Non Patent Literature will be manually reviewed and keyed into USPTO systems.					
2	Non Patent Literature	12240916_File_History.pdf	6653677 8d02dc3c6769ca0279bff62c07914f1f334496ac	no	320
Warnings:					
Information:					
3	Non Patent Literature	Bonella_Provisional_60749267.pdf	1387702 fc6221479289ed0737064f166638f61dc4234365	no	53
Warnings:					
Information:					
4	Non Patent Literature	File_History_US8671243.pdf	3959474 b1d1d31aa228f0ba4a13a22baa3a5746685ecb44	no	181
Warnings:					
Information:					
5	Non Patent Literature	Intel_25190203.pdf	3143543 e9d1867280ae5941fb9422ebb1b6db09af9d71c7	no	100
Warnings:					
Information:					
6	Non Patent Literature	IPR2017_00692_Provisional_60941586.pdf	462055 c4bd0ef93ee01c683c38ddb6bbf0a767ec455055	no	23
Warnings:					
Information:					
7	Non Patent Literature	JEDECDDR1SPEC.pdf	4541877 673edc787869e7628f50c3bdc000c6bd2263b625	no	77
Warnings:					
Information:					

8	Non Patent Literature	JESD79_2B.pdf	5888025 5c42cbc59b0ae7c1584dfda9da74afde2d827417	no	113
Warnings:					
Information:					
9	Non Patent Literature	MS_Computer_Dictionary_2002.pdf	208166 35a6b9480e36f5d4b6cb5c027e6b93ec9c7207e8	no	10
Warnings:					
Information:					
10	Non Patent Literature	MS_Windows_2000_Profl_Res_Kit.pdf	2536464 285f1ae6d52ec5979b431fa3c5d6f4a4dc46a09d	no	76
Warnings:					
Information:					
11	Non Patent Literature	MUX_from_Philips.pdf	1015908 3a240f97340b98b521f89e2cd8e2c6dc461171d8	no	10
Warnings:					
Information:					
12	Non Patent Literature	NPL_Ron_Maltiel.pdf	109242 e1f4559cfc279059acd31c229e48aa8b6469f772	no	7
Warnings:					
Information:					
13	Non Patent Literature	Provisional_60912321.pdf	807076 4c02829492a416a437bafc44e025007f422328f0	no	42
Warnings:					
Information:					
			Total Files Size (in bytes):	31813008	

This Acknowledgement Receipt evidences receipt on the noted date by the USPTO of the indicated documents, characterized by the applicant, and including page counts, where applicable. It serves as evidence of receipt similar to a Post Card, as described in MPEP 503.

New Applications Under 35 U.S.C. 111
If a new application is being filed and the application includes the necessary components for a filing date (see 37 CFR 1.53(b)-(d) and MPEP 506), a Filing Receipt (37 CFR 1.54) will be issued in due course and the date shown on this Acknowledgement Receipt will establish the filing date of the application.

National Stage of an International Application under 35 U.S.C. 371
If a timely submission to enter the national stage of an international application is compliant with the conditions of 35 U.S.C. 371 and other applicable requirements a Form PCT/DO/EO/903 indicating acceptance of the application as a national stage submission under 35 U.S.C. 371 will be issued in addition to the Filing Receipt, in due course.

New International Application Filed with the USPTO as a Receiving Office
If a new international application is being filed and the international application includes the necessary components for an international filing date (see PCT Article 11 and MPEP 1810), a Notification of the International Application Number and of the International Filing Date (Form PCT/RO/105) will be issued in due course, subject to prescriptions concerning national security, and the date shown on this Acknowledgement Receipt will establish the international filing date of the application.

UNITED STATES PATENT AND TRADEMARK OFFICE

UNITED STATES DEPARTMENT OF COMMERCE
United States Patent and Trademark Office
Address: COMMISSIONER FOR PATENTS
P.O. Box 1450
Alexandria, Virginia 22313-1450
www.uspto.gov

APPLICATION NO.	FILING DATE	FIRST NAMED INVENTOR	ATTORNEY DOCKET NO.	CONFIRMATION NO.
14/840,865	08/31/2015	Hyun Lee	062453-036	2445

22204 7590 05/05/2017
NIXON PEABODY, LLP
799 Ninth Street, NW
SUITE 500
WASHINGTON, DC 20001

EXAMINER
ELMORE, STEPHEN C

ART UNIT	PAPER NUMBER
2133	

NOTIFICATION DATE	DELIVERY MODE
05/05/2017	ELECTRONIC

Please find below and/or attached an Office communication concerning this application or proceeding.

The time period for reply, if any, is set in the attached communication.

Notice of the Office communication was sent electronically on above-indicated "Notification Date" to the following e-mail address(es):

nppatent@nixonpeabody.com
ipairlink@nixonpeabody.com

PTOL-90A (Rev. 04/07)

Office Action Summary	Application No. 14/840,865	Applicant(s) LEE ET AL.	
	Examiner STEPHEN ELMORE	Art Unit 2133	AIA (First Inventor to File) Status No

-- The MAILING DATE of this communication appears on the cover sheet with the correspondence address --

Period for Reply

A SHORTENED STATUTORY PERIOD FOR REPLY IS SET TO EXPIRE 3 MONTHS FROM THE MAILING DATE OF THIS COMMUNICATION.

- Extensions of time may be available under the provisions of 37 CFR 1.136(a). In no event, however, may a reply be timely filed after SIX (6) MONTHS from the mailing date of this communication.
- If NO period for reply is specified above, the maximum statutory period will apply and will expire SIX (6) MONTHS from the mailing date of this communication.
- Failure to reply within the set or extended period for reply will, by statute, cause the application to become ABANDONED (35 U.S.C. § 133). Any reply received by the Office later than three months after the mailing date of this communication, even if timely filed, may reduce any earned patent term adjustment. See 37 CFR 1.704(b).

Status

1)☒ Responsive to communication(s) filed on 2/21/2017.

☐ A declaration(s)/affidavit(s) under **37 CFR 1.130(b)** was/were filed on _____.

2a)☐ This action is **FINAL**. 2b)☒ This action is non-final.

3)☐ An election was made by the applicant in response to a restriction requirement set forth during the interview on _____; the restriction requirement and election have been incorporated into this action.

4)☐ Since this application is in condition for allowance except for formal matters, prosecution as to the merits is closed in accordance with the practice under *Ex parte Quayle*, 1935 C.D. 11, 453 O.G. 213.

Disposition of Claims*

5)☒ Claim(s) 2-22 is/are pending in the application.

5a) Of the above claim(s) _____ is/are withdrawn from consideration.

6)☐ Claim(s) _____ is/are allowed.

7)☒ Claim(s) 2-13 and 17-22 is/are rejected.

8)☒ Claim(s) 10 and 14-16 is/are objected to.

9)☐ Claim(s) _____ are subject to restriction and/or election requirement.

* If any claims have been determined allowable, you may be eligible to benefit from the **Patent Prosecution Highway** program at a participating intellectual property office for the corresponding application. For more information, please see http://www.uspto.gov/patents/init_events/pph/index.jsp or send an inquiry to PPHfeedback@uspto.gov.

Application Papers

10)☒ The specification is objected to by the Examiner.

11)☒ The drawing(s) filed on 8/31/2015 is/are: a)☒ accepted or b)☐ objected to by the Examiner.

Applicant may not request that any objection to the drawing(s) be held in abeyance. See 37 CFR 1.85(a).

Replacement drawing sheet(s) including the correction is required if the drawing(s) is objected to. See 37 CFR 1.121(d).

Priority under 35 U.S.C. § 119

12)☐ Acknowledgment is made of a claim for foreign priority under 35 U.S.C. § 119(a)-(d) or (f).

Certified copies:

a)☐ All b)☐ Some** c)☐ None of the:

1.☐ Certified copies of the priority documents have been received.

2.☐ Certified copies of the priority documents have been received in Application No. _____.

3.☐ Copies of the certified copies of the priority documents have been received in this National Stage application from the International Bureau (PCT Rule 17.2(a)).

** See the attached detailed Office action for a list of the certified copies not received.

Attachment(s)

1) ☒ Notice of References Cited (PTO-892)

2) ☒ Information Disclosure Statement(s) (PTO/SB/08a and/or PTO/SB/08b) Paper No(s)/Mail Date 2/21/2017 and 4/20/2017.

3) ☐ Interview Summary (PTO-413) Paper No(s)/Mail Date. _____ .

4) ☐ Other: _____.

Samsung Electronics Co., Ltd.
Ex. 1011, p. 219

The present application is being examined under the pre-AIA first to invent provisions.

DETAILED ACTION

1. This Office action responds to the RCE application filed 2/21/2017.

2. Claim 1 was canceled and claims 2-22 were added by the amendment filed 10/20/2016.

3. Claims 2-22 remain for examination.

Priority

4. Applicant claims Domestic Benefit to the following parent patent applications based upon the following continuity claim dependencies:

a. Continuation of prior application 14/489,269 filed 9/17/2014;

b. Continuation of prior application 13/559,476 filed 7/26/2012;

c. Non-provisional 61/512,871 filed 7/28/2011;

d. Continuation-in-part of 12/240,916 filed 6/2/2008;

e. Continuation of 12/131,873 filed June 2, 2008;

f. Non-provisional 60/941,586 filed 6/1/2007.

Applicant's claim for the benefit of a prior-filed application under 35 U.S.C. 119(e) or under 35 U.S.C. 120, 121, 365(c), or 386(c) is acknowledged. However, Applicant has not complied with one or more conditions for receiving the benefit of an earlier filing date under 35 U.S.C. 120 as follows:

The later-filed application must be an application for a patent for an invention which is also disclosed in the prior application (the parent or original non-provisional application or provisional application). The disclosure of the invention in the parent application and in the later-filed application must be sufficient to comply with the requirements of 35 U.S.C. 112(a) or the first paragraph of pre-AIA 35 U.S.C. 112, except for the best mode requirement. See *Transco Products, Inc. v. Performance Contracting, Inc.*, 38 F.3d 551, 32 USPQ2d 1077 (Fed. Cir. 1994).

The disclosures of prior-filed applications, 1(d)-1(f), i.e., Continuation-in-part of 12/240,916, Continuation of 12/131,873, and non-provisional 60/941,586, fail to provide adequate support or enablement in the manner provided by 35 U.S.C. 112(a) or pre-AIA 35 U.S.C. 112, first paragraph for one or more claims of this application. Specifically, present claims 2-22 recite the feature and corresponding recited functionality for the element "data manager" which lacks proper antecedent basis or clear support, and further lacks adequate written description, under 35 U.S.C. 112(a) or pre-AIA 35 U.S.C. 112, first paragraph in the above noted parent applications.

Therefore, claims 2-22 are only entitled to the effective priority date of 7/28/2011 based upon the earliest proper priority claim being that to parent application 61/512,871 filed 7/28/2011.

Information Disclosure Statement

5. The Information Disclosure Statement (IDS) filed 4/2017 contains two "lined-through" entries in the category Non-Patent Literature Documents, which have not been considered. The IDS entries fail to comply with 37 CFR § 1.98(a)(1) because they are and have been identified as "File History…" in "Non-Patent Literature Documents" of the IDS and therefore do not comply with 37 CFR § 1.98(a)(1). Each publication requested to be considered under 37 CFR § 1.98(a)(1) needs to be an individual publication listed individually on form PTO-1449. Aggregated listings (i.e., an electronic "file history") do not comply because the aggregate "history" is a compilation of multiple documents with each document having distinct and/or different publication dates, and so is not an individual document publication according to 37 CFR § 1.98(a)(1).

Specification

6. The disclosure is objected to because in paragraph [0001] the status of application 14/489,269 should be updated to reflect that it is now a U.S. patent.

Claim Objections

7. Claim 10 is objected to because of the informality: at line 8, typographic error "include" should be "includes".

Claim Rejections - 35 USC § 102

8. The following is a quotation of the appropriate paragraphs of 35 U.S.C. 102 that form the basis for the rejections under this section made in this Office action:

In the event the determination of the status of the application as subject to AIA 35 U.S.C. 102 and 103 (or as subject to pre-AIA 35 U.S.C. 102 and 103) is incorrect, any correction of the statutory basis for the rejection will not be considered a new ground of rejection if the prior art relied upon, and the rationale supporting the rejection, would be the same under either status.

The following is a quotation of the appropriate paragraphs of pre-AIA 35 U.S.C. 102 that form the basis for the rejections under this section made in this Office action:

> A person shall be entitled to a patent unless –
>
> (e) the invention was described in (1) an application for patent, published under section 122(b), by another filed in the United States before the invention by the applicant for patent or (2) a patent granted on an application for patent by another filed in the United States before the invention by the applicant for patent, except that an international application filed under the treaty defined in section 351(a) shall have the effects for purposes of this subsection of an application filed in the United States only if the international application designated the United States and was published under Article 21(2) of such treaty in the English language.

Claim(s) 2-13 and 17-22 are rejected under pre-AIA 35 U.S.C. 102(e) as being anticipated by Best, U.S. 2010/0110748 A1, (which claims priority to provisional application 60/912,321 filed April 17, 2007).

Best discloses a composite, hybrid memory device including a first volatile storage die and a second non-volatile storage die disposed within an integrated circuit package, see Abstract, and discloses a shared interface circuit to receive memory access commands directed to the first storage die and to convey read and write data between an external data path and the first and second storage die, see Figure 1A as an embodiment of the hybrid memory device, described in paragraphs [0013-0015].

Best then teaches the claimed memory module (claims 2, 10, and 17) as claimed comprising:

Best teaches, as per claims 2-9, *a memory module comprising: a data manager* (the data manager is interpreted under Broadest Reasonable Interpretation (BRI) as a data transfer interconnect operable in two directions, see Figure 2, the combination of elements 131, 133, and 144 functioning through the connected data busses 142, 144, 140, and 128 to read, write, and thereby transfer data bi-directionally in response to multiple memory commands from the host over the external DQ I/F interface as described through paragraphs [0017-0020], where first protocol and second protocols (being different from each other, for example, as per claim 4, first protocol is of a DDR protocol for DRAM 103, and second protocol is a different) are disclosed in paragraphs [0015, 0016, and 0030] (as teaching claim 3) including the disclosure of "performing any necessary protocol conversion") *configured to be coupled to a memory controller of a host system* (host instructions for operating the data transfer functions of the hybrid memory are disclosed in paragraph [0033], teaching claim 5) *using a data bus, the data manager is operable to communicate data signals with the memory controller of the host system* (the host memory controller is inherent to the providing of host memory instructions, and is also

taught by element command decoder 122 (read and write commands), and element data control 151, Figures 2 and 3) *by way of the data bus in accordance with a first protocol; a first volatile memory subsystem coupled to the data manager using a first data bus, the first volatile memory subsystem is operable to communicate data signals with the data manager by way of the first data bus in accordance with the first protocol; a second volatile memory subsystem coupled to the data manager using a second data bus, the second volatile memory subsystem is operable to communicate data signals with the data manager by way of the second data bus in accordance with the first protocol; a non-volatile memory subsystem coupled to the data manager using a third data bus, the non-volatile memory subsystem is operable to communicate data signals with the data manager by way of the third data bus using a second protocol; and a controller operable to receive one or more commands from the memory controller of the host system in accordance with the first protocol, and in response to the one or more commands received from the memory controller of the host system, the controller generates and transmits one or more control signals to the data manager, wherein, in response to the one or more control signals, the data manager transfers data between the first volatile memory subsystem and the memory controller of the host system and transfers data signals between the non-volatile memory subsystem and the second volatile memory subsystem;*

Best teaches, as per claim 3, *wherein the second protocol is different from the first protocol,* as noted above, and teaches as per claim 4, *wherein the first protocol is selected from the group consisting of DDR, DDR2, DDR3, and DDR4 protocols,* as noted above, and teaches as per claim 5, *wherein the data manager controls data traffic between any one of the first volatile memory subsystem and the second volatile memory subsystem and any one of the non-*

volatile memory subsystem and the memory controller of the host system based on one or more commands received from the controller, as noted above;

Best discloses as per claim 6, *wherein the data manager controls a starting time of a data transfer between any one of the first volatile memory subsystem and the second volatile memory subsystem and any one of the non-volatile memory subsystem and the memory controller of the host system based on one or more commands or control signals received from the controller*, as noted above and paragraph [0028];

Best discloses as per claim 7, *wherein the data manager is configured as a bi- directional data transfer fabric,* as noted above, and as disclosed by the data control/steering circuit 131, Figure 2;

Best discloses as per claim 8, *wherein the data manager is operable to concurrently transfer data (i) between the first volatile memory subsystem and the memory controller of the host system, and (ii) between the non-volatile memory subsystem and the second volatile memory subsystem,* See paragraph [0018];

Best discloses as per claim 9, *wherein the data manager further comprises a data formatting subsystem operable to format data to be transferred via the data bus, the first data bus, the second data bus and the third data bus,* as the subsystem consisting of the underlying logic for a serializing/deserializing function contained within the data steering/control circuit 131 and the external data interface 133;

Best teaches, as noted above, as per claims 10-13, a *memory module couplable to a memory controller of a host system, the memory module comprising: a non-volatile memory (NVM) subsystem coupled to a NVM controller* (element 137)*; a data manager coupled to a data*

manager controller and to the NVM subsystem; a volatile memory (VM) subsystem coupled to a VM controller (element 129) *and to the data manager; and a controller operable to receive a command from the memory controller of the host system, the controller include(s) the NVM controller, the VM controller, and the data manager controller, the VM controller is operable (i) to generate and transmit a first command to the VM subsystem in response to the command received from the memory controller of the host system, and (ii) to generate and transmit a second command to the VM subsystem, wherein the second command is generated by the VM controller independently from the command received from the memory controller of the host system, and wherein the controller is operable to direct (i) operation of the NVM subsystem by way of the NVM controller, (ii) operation of the VM subsystem by way of the VM controller, and (iii) operation of the data manager by way of the data manager controller to transfer data between any two or more of the memory controller of the host system, the VM subsystem, and the NVM subsystem based on any one of the first command and the second command;*

Best discloses as per claims 11 and 12, *wherein the controller further includes an interface scheduler, the interface scheduler schedules the VM subsystem operation and the NVM subsystem operation such that no resource conflict occurs in the data manager, and wherein the controller further includes an interface scheduler, the interface scheduler assigns time slots for the VM controller and the NVM controller based on current command status and a pending command received or to be received from the memory controller of the host system,* see paragraph [0018], and Best teaches as per claim 13, *wherein the VM subsystem is operable to exchange data with the NVM subsystem by way of the data manager in response to the second command received from the VM controller,* as noted above;

Best teaches as per claims 17-22, *a memory module couplable to a memory controller of a host system, the memory module comprising: a non-volatile memory (NVM) subsystem; a data manager coupled to a data manager controller and to the NVM subsystem; a volatile memory (VM) subsystem coupled to the data manager; and a controller operable to receive a read command from the memory controller of the host system, the controller is configured to determine, in response to the read command, a target address for a requested data, and if requested data is not stored in the VM subsystem, then the controller (i) initiates data transfer operations from the NVM subsystem to the VM subsystem by way of the data manager, and (ii) initiates data transfer operations from the VM subsystem to the memory controller of the host system by way of the data manager,* as noted above; and discloses as per claims 18-22, *wherein the controller is operable to direct (i) operation of the NVM subsystem by way of a NVM controller, (ii) operation of the VM subsystem by way of a VM controller, and (iii) operation of the data manager by way of a data manager controller to transfer data between any two or more of the memory controller of the host system, the VM subsystem, and the NVM subsystem based on the read command, and wherein the data manager controls a starting time of a data transfer between any two or more of the memory controller of the host system, the VM subsystem, and the NVM subsystem based on the read command, and wherein the VM subsystem includes first and second VM subsystems* (see paragraph [0025], SRAM); and discloses *wherein the data manager controls a starting time of a data transfer between any one of the first VM subsystem and the second VM subsystem and any one of the NVM subsystem and the memory controller of the host system based on the read command,* paragraph [0028], *and wherein the data manager is operable to concurrently transfer data (i) between the first VM subsystem and the memory*

controller of the host system, and (ii) between the NVM subsystem and the second VM subsystem, paragraph [0018], as noted above.

Allowable Subject Matter

9. Claims 14-16 are objected to as being dependent upon a rejected base claim, but would be allowable over the prior art of record if rewritten in independent form including all of the limitations of the base claim and any intervening claims.

Conclusion

10. The prior art made of record and not relied upon is cited to establish the level of skill in applicant's art and those arts considered reasonably pertinent to applicant's disclosure. See MPEP 707.05(c).

Any inquiry concerning this communication or earlier communications from the examiner should be directed to STEPHEN ELMORE whose telephone number is (571)272-4436. The examiner can normally be reached on Mon-Fri from 9:30-5:00.

Examiner interviews are available via telephone, in-person, and video conferencing using a USPTO supplied web-based collaboration tool. To schedule an interview, applicant is encouraged to use the USPTO Automated Interview Request (AIR) at http://www.uspto.gov/interviewpractice.

If attempts to reach the examiner by telephone are unsuccessful, the examiner's supervisor, Jared Rutz can be reached on (571) 272-5535. The fax phone number for the organization where this application or proceeding is assigned is 571-273-8300.

Information regarding the status of an application may be obtained from the Patent Application Information Retrieval (PAIR) system. Status information for published applications may be obtained from either Private PAIR or Public PAIR. Status information for unpublished applications is available through Private PAIR only. For more information about the PAIR system, see http://pair-direct.uspto.gov. Should you have questions on access to the Private PAIR system, contact the Electronic Business Center (EBC) at 866-217-9197 (toll-free). If you would like assistance from a USPTO Customer Service Representative or access to the automated information system, call 800-786-9199 (IN USA OR CANADA) or 571-272-1000.

/STEPHEN ELMORE/
Primary Examiner, Art Unit 2133

May 1, 2017

Notice of References Cited	Application/Control No. 14/840,865	Applicant(s)/Patent Under Reexamination LEE ET AL.	
	Examiner STEPHEN ELMORE	Art Unit 2133	Page 1 of 1

U.S. PATENT DOCUMENTS

*		Document Number Country Code-Number-Kind Code	Date MM-YYYY	Name	CPC Classification	US Classification
*	A	US-2010/0110748 A1	05-2010	Best; Scott C.	G06F12/0638	365/51
	B	US-				
	C	US-				
	D	US-				
	E	US-				
	F	US-				
	G	US-				
	H	US-				
	I	US-				
	J	US-				
	K	US-				
	L	US-				
	M	US-				

FOREIGN PATENT DOCUMENTS

*		Document Number Country Code-Number-Kind Code	Date MM-YYYY	Country	Name	CPC Classification
	N					
	O					
	P					
	Q					
	R					
	S					
	T					

NON-PATENT DOCUMENTS

*		Include as applicable: Author, Title Date, Publisher, Edition or Volume, Pertinent Pages)
	U	
	V	
	W	
	X	

*A copy of this reference is not being furnished with this Office action. (See MPEP § 707.05(a).)
Dates in MM-YYYY format are publication dates. Classifications may be US or foreign.

Index of Claims	Application/Control No.	Applicant(s)/Patent Under Reexamination
	14840865	LEE ET AL.
	Examiner	**Art Unit**
	STEPHEN ELMORE	2133

✓	Rejected	-	Cancelled	N	Non-Elected	A	Appeal
=	Allowed	÷	Restricted	I	Interference	O	Objected

☐ Claims renumbered in the same order as presented by applicant ☐ CPA ☐ T.D. ☐ R.1.47

CLAIM		DATE								
Final	Original	04/17/2016	05/01/2017							
	1	✓								
	2		✓							
	3		✓							
	4		✓							
	5		✓							
	6		✓							
	7		✓							
	8		✓							
	9		✓							
	10		✓							
	11		✓							
	12		✓							
	13		✓							
	14		O							
	15		O							
	16		O							
	17		✓							
	18		✓							
	19		✓							
	20		✓							
	21		✓							
	22		✓							

Doc code: IDS
Doc description: Information Disclosure Statement (IDS) Filed

PTO/SB/08a (03-15)
Approved for use through 07/31/2016. OMB 0651-0031
U.S. Patent and Trademark Office; U.S. DEPARTMENT OF COMMERCE
Under the Paperwork Reduction Act of 1995, no persons are required to respond to a collection of information unless it contains a valid OMB control number.

INFORMATION DISCLOSURE STATEMENT BY APPLICANT (Not for submission under 37 CFR 1.99)		
	Application Number	14840865
	Filing Date	2015-08-31
	First Named Inventor	LEE, HYUN
	Art Unit	2133
	Examiner Name	ELMORE, STEPHEN C.
	Attorney Docket Number	062453-036

U.S.PATENTS Remove

Examiner Initial*	Cite No	Patent Number	Kind Code[1]	Issue Date	Name of Patentee or Applicant of cited Document	Pages,Columns,Lines where Relevant Passages or Relevant Figures Appear
	1	4882709	A	1989-11-21	WYLAND	
	2	5490155	A	1996-02-06	ABDOO et al.	
	3	5799200	A	1998-08-25	BRANT et al.	
	4	6026465	A	2000-02-15	MILLS et al.	
	5	6065092	A	2000-05-16	ROY	
	6	6571244	B1	2003-05-27	LARSON	
	7	6614685	B2	2003-09-02	WONG	
	8	6693840	B2	2004-02-17	SHIMADA et al.	

ALL REFERENCES CONSIDERED EXCEPT WHERE LINED THROUGH. /S.C.E/

INFORMATION DISCLOSURE STATEMENT BY APPLICANT (Not for submission under 37 CFR 1.99)		
	Application Number	14840865
	Filing Date	2015-08-31
	First Named Inventor	LEE, HYUN
	Art Unit	2133
	Examiner Name	ELMORE, STEPHEN C.
	Attorney Docket Number	062453-036

	9	6810513	B1	2006-10-26	VEST	
	10	7136978	B2	2006-11-14	MIURA et al.	
	11	7519754	B2	2009-04-14	WANG et al.	Related to CN 101017460 A (SILICON STORAGE TECH INC) 2007-08-15
	12	9043677	B2	2015-05-26	KONG et al.	
	13	9361250	B2	2016-06-07	SHAN et al.	Related to CN 102110057 A (LANQI SEMICONDUCTOR SHANGHAI CO.,LTD) 2011-06-29

If you wish to add additional U.S. Patent citation information please click the Add button. Add

U.S.PATENT APPLICATION PUBLICATIONS Remove

Examiner Initial*	Cite No	Publication Number	Kind Code[1]	Publication Date	Name of Patentee or Applicant of cited Document	Pages,Columns,Lines where Relevant Passages or Relevant Figures Appear
	1	20020053944	A1	2002-05-09	BRASS et al.	
	2	20030028733	A1	2003-02-06	TSUNODA et al.	
	3	20050249011	A1	2005-11-10	MAEDA	
	4	20050273548	A1	2005-12-08	ROOHPARVAR	

EFS Web 2.1.17

ALL REFERENCES CONSIDERED EXCEPT WHERE LINED THROUGH. /S.C.E/

INFORMATION DISCLOSURE STATEMENT BY APPLICANT (Not for submission under 37 CFR 1.99)		
	Application Number	14840865
	Filing Date	2015-08-31
	First Named Inventor	LEE, HYUN
	Art Unit	2133
	Examiner Name	ELMORE, STEPHEN C.
	Attorney Docket Number	062453-036

	5	20060212651	A1	2006-09-21	ASHMORE	
	6	20070070669	A1	2007-03-29	TSERN	
	7	20070147115	A1	2007-06-28	LIN et al.	
	8	20070255898	A1	2007-11-01	NISHIDE et al.	
	9	20070288683	A1	2007-12-13	PANABAKER et al.	
	10	20080147968	A1	2008-06-19	LEE et al.	
	11	20080235443	A1	2008-09-25	CHOW et al.	
	12	20080291727	A1	2008-11-27	SEO et al.	
	13	20100322020	A1	2010-12-23	KIM	
	14	20110078496	A1	2011-03-31	JEDDELOH	
	15	20120317433	A1	2012-12-13	ELLIS et al.	

ALL REFERENCES CONSIDERED EXCEPT WHERE LINED THROUGH. /S.C.E/

INFORMATION DISCLOSURE STATEMENT BY APPLICANT (Not for submission under 37 CFR 1.99)		
	Application Number	14840865
	Filing Date	2015-08-31
	First Named Inventor	LEE, HYUN
	Art Unit	2133
	Examiner Name	ELMORE, STEPHEN C.
	Attorney Docket Number	062453-036

	16	20140032820	A1	2014-01-30	HARASAWA et al.	
	17	20150058701	A1	2015-02-06	XING et al.	

If you wish to add additional U.S. Published Application citation information please click the Add button. Add

FOREIGN PATENT DOCUMENTS Remove

Examiner Initial*	Cite No	Foreign Document Number[3]	Country Code[2] i	Kind Code[4]	Publication Date	Name of Patentee or Applicant of cited Document	Pages,Columns,Lines where Relevant Passages or Relevant Figures Appear	T[5]
	1							

If you wish to add additional Foreign Patent Document citation information please click the Add button Add

NON-PATENT LITERATURE DOCUMENTS Remove

Examiner Initials*	Cite No	Include name of the author (in CAPITAL LETTERS), title of the article (when appropriate), title of the item (book, magazine, journal, serial, symposium, catalog, etc), date, pages(s), volume-issue number(s), publisher, city and/or country where published.	T[5]
	1	CATSOULIS, "Designing Embedded Hardware: Create New Computers and Devices", O'Reilly Media, Inc. (2005). (67 pages)	
	2	ELMHURST et al., "A 1.8-V 128-Mb 125-MHz Multilevel Cell Flash Memory With Flexible Read While Write", IEEE Journal of Solid-State Circuits 38(11):1929-1933 (2003).	
	3	Extended European Search Report for European Application No. 12 817 751.6, mailed June 9, 2015.	
	4	Final Office Action, dated June 15, 2016, issued in U.S. Patent Application No. 14/489,281, 10 pages.	

ALL REFERENCES CONSIDERED EXCEPT WHERE LINED THROUGH. /S.C.E/

INFORMATION DISCLOSURE STATEMENT BY APPLICANT (Not for submission under 37 CFR 1.99)		
	Application Number	14840865
	Filing Date	2015-08-31
	First Named Inventor	LEE, HYUN
	Art Unit	2133
	Examiner Name	ELMORE, STEPHEN C.
	Attorney Docket Number	062453-036

	5	Notice of Allowance in U.S. Patent Application No. 13/536,173, mailed July 2, 2013.	
	6	Notice of Allowance in U.S. Patent Application No. 13/905,053, mailed December 11, 2013.	
	7	Notice of Allowance in U.S. Patent Application No. 13/905,048, mailed December 19, 2013, 8 pages.	
	8	Notice of Allowance in U.S. Patent Application No. 13/559,476, mailed September 29, 2014.	
	9	Notice of Allowance in U.S. Patent Application No. 14/173,219 dated July 7, 2014.	
	10	Office Action in U.S. Application No. 13/536,176, mailed on April 15, 2013.	
	11	Office Action in U.S. Patent Application No. 14/302,292, mailed December 21, 2015.	
	12	Petition for Inter Partes Review of U.S. Patent No. 8,301,833, filed September 29, 2008.	
	13	PATTERSON et al., "Computer Organization & Design: The Hardware/Software Interface" Morgan Kaufmann Publishers, Inc. (1998).	
	14	Petition for Inter Partes Review of U.S. Patent No. 8,874,831, filed July 26, 2012.	
	15	Petition for Inter Partes Review of U.S. Patent No. 8,671,243, filed May 29, 2013.	

ALL REFERENCES CONSIDERED EXCEPT WHERE LINED THROUGH. /S.C.E/

INFORMATION DISCLOSURE STATEMENT BY APPLICANT (Not for submission under 37 CFR 1.99)		
	Application Number	14840865
	Filing Date	2015-08-31
	First Named Inventor	LEE, HYUN
	Art Unit	2133
	Examiner Name	ELMORE, STEPHEN C.
	Attorney Docket Number	062453-036

	16	Restriction Requirement in U.S. Patent Application No. 12/240,916, mailed March 31, 2011.	

If you wish to add additional non-patent literature document citation information please click the Add button Add

EXAMINER SIGNATURE

Examiner Signature	/STEPHEN C ELMORE/	Date Considered	05/01/2017

*EXAMINER: Initial if reference considered, whether or not citation is in conformance with MPEP 609. Draw line through a citation if not in conformance and not considered. Include copy of this form with next communication to applicant.

[1] See Kind Codes of USPTO Patent Documents at www.USPTO.GOV or MPEP 901.04. [2] Enter office that issued the document, by the two-letter code (WIPO Standard ST.3). [3] For Japanese patent documents, the indication of the year of the reign of the Emperor must precede the serial number of the patent document. [4] Kind of document by the appropriate symbols as indicated on the document under WIPO Standard ST.16 if possible. [5] Applicant is to place a check mark here if English language translation is attached.

ALL REFERENCES CONSIDERED EXCEPT WHERE LINED THROUGH. /S.C.E/

INFORMATION DISCLOSURE STATEMENT BY APPLICANT

(Not for submission under 37 CFR 1.99)

Application Number	14840865
Filing Date	2015-08-31
First Named Inventor	LEE, HYUN
Art Unit	2133
Examiner Name	ELMORE, STEPHEN C.
Attorney Docket Number	062453-036

CERTIFICATION STATEMENT

Please see 37 CFR 1.97 and 1.98 to make the appropriate selection(s):

That each item of information contained in the information disclosure statement was first cited in any communication from a foreign patent office in a counterpart foreign application not more than three months prior to the filing of the information disclosure statement. See 37 CFR 1.97(e)(1).

OR

☐ That no item of information contained in the information disclosure statement was cited in a communication from a foreign patent office in a counterpart foreign application, and, to the knowledge of the person signing the certification after making reasonable inquiry, no item of information contained in the information disclosure statement was known to any individual designated in 37 CFR 1.56(c) more than three months prior to the filing of the information disclosure statement. See 37 CFR 1.97(e)(2).

See attached certification statement.

The fee set forth in 37 CFR 1.17 (p) has been submitted herewith.

☒ A certification statement is not submitted herewith.

SIGNATURE

A signature of the applicant or representative is required in accordance with CFR 1.33, 10.18. Please see CFR 1.4(d) for the form of the signature.

Signature	/Khaled Shami/	Date (YYYY-MM-DD)	2017-02-21
Name/Print	Khaled Shami	Registration Number	38,745

This collection of information is required by 37 CFR 1.97 and 1.98. The information is required to obtain or retain a benefit by the public which is to file (and by the USPTO to process) an application. Confidentiality is governed by 35 U.S.C. 122 and 37 CFR 1.14. This collection is estimated to take 1 hour to complete, including gathering, preparing and submitting the completed application form to the USPTO. Time will vary depending upon the individual case. Any comments on the amount of time you require to complete this form and/or suggestions for reducing this burden, should be sent to the Chief Information Officer, U.S. Patent and Trademark Office, U.S. Department of Commerce, P.O. Box 1450, Alexandria, VA 22313-1450. DO NOT SEND FEES OR COMPLETED FORMS TO THIS ADDRESS. **SEND TO: Commissioner for Patents, P.O. Box 1450, Alexandria, VA 22313-1450.**

ALL REFERENCES CONSIDERED EXCEPT WHERE LINED THROUGH. /S.C.E/

Privacy Act Statement

The Privacy Act of 1974 (P.L. 93-579) requires that you be given certain information in connection with your submission of the attached form related to a patent application or patent. Accordingly, pursuant to the requirements of the Act, please be advised that: (1) the general authority for the collection of this information is 35 U.S.C. 2(b)(2); (2) furnishing of the information solicited is voluntary; and (3) the principal purpose for which the information is used by the U.S. Patent and Trademark Office is to process and/or examine your submission related to a patent application or patent. If you do not furnish the requested information, the U.S. Patent and Trademark Office may not be able to process and/or examine your submission, which may result in termination of proceedings or abandonment of the application or expiration of the patent.

The information provided by you in this form will be subject to the following routine uses:

1. The information on this form will be treated confidentially to the extent allowed under the Freedom of Information Act (5 U.S.C. 552) and the Privacy Act (5 U.S.C. 552a). Records from this system of records may be disclosed to the Department of Justice to determine whether the Freedom of Information Act requires disclosure of these record s.

2. A record from this system of records may be disclosed, as a routine use, in the course of presenting evidence to a court, magistrate, or administrative tribunal, including disclosures to opposing counsel in the course of settlement negotiations.

3. A record in this system of records may be disclosed, as a routine use, to a Member of Congress submitting a request involving an individual, to whom the record pertains, when the individual has requested assistance from the Member with respect to the subject matter of the record.

4. A record in this system of records may be disclosed, as a routine use, to a contractor of the Agency having need for the information in order to perform a contract. Recipients of information shall be required to comply with the requirements of the Privacy Act of 1974, as amended, pursuant to 5 U.S.C. 552a(m).

5. A record related to an International Application filed under the Patent Cooperation Treaty in this system of records may be disclosed, as a routine use, to the International Bureau of the World Intellectual Property Organization, pursuant to the Patent Cooperation Treaty.

6. A record in this system of records may be disclosed, as a routine use, to another federal agency for purposes of National Security review (35 U.S.C. 181) and for review pursuant to the Atomic Energy Act (42 U.S.C. 218(c)).

7. A record from this system of records may be disclosed, as a routine use, to the Administrator, General Services, or his/her designee, during an inspection of records conducted by GSA as part of that agency's responsibility to recommend improvements in records management practices and programs, under authority of 44 U.S.C. 2904 and 2906. Such disclosure shall be made in accordance with the GSA regulations governing inspection of records for this purpose, and any other relevant (i.e., GSA or Commerce) directive. Such disclosure shall not be used to make determinations about individuals.

8. A record from this system of records may be disclosed, as a routine use, to the public after either publication of the application pursuant to 35 U.S.C. 122(b) or issuance of a patent pursuant to 35 U.S.C. 151. Further, a record may be disclosed, subject to the limitations of 37 CFR 1.14, as a routine use, to the public if the record was filed in an application which became abandoned or in which the proceedings were terminated and which application is referenced by either a published application, an application open to public inspections or an issued patent.

9. A record from this system of records may be disclosed, as a routine use, to a Federal, State, or local law enforcement agency, if the USPTO becomes aware of a violation or potential violation of law or regulation.

ALL REFERENCES CONSIDERED EXCEPT WHERE LINED THROUGH. /S.C.E/

EAST Search History

EAST Search History (Prior Art)

Ref #	Hits	Search Query	DBs	Default Operator	Plurals	Time Stamp
L1	11599	711/103.ccls.	US-PGPUB; USPAT; USOCR; FPRS; EPO; JPO; IBM_TDB	OR	ON	2017/05/01 09:21
L2	2789	365/185.33.ccls.	US-PGPUB; USPAT; USOCR; FPRS; EPO; JPO; IBM_TDB	OR	ON	2017/05/01 09:21
L3	21406	711/111,112,114,154,156.ccls.	US-PGPUB; USPAT; USOCR; FPRS; EPO; JPO; IBM_TDB	OR	ON	2017/05/01 09:21
L4	33587	L1 or L2 or L3	US-PGPUB; USPAT; USOCR; FPRS; EPO; JPO; IBM_TDB	OR	ON	2017/05/01 09:21
L5	7870	hybrid near3 memory	US-PGPUB; USPAT; USOCR; FPRS; EPO; JPO; IBM_TDB	OR	ON	2017/05/01 09:21
L6	743	data adj manager and controller and memory adj controller	US-PGPUB; USPAT; USOCR; FPRS; EPO; JPO; IBM_TDB	OR	ON	2017/05/01 09:21
L7	20	L5 and L6	US-PGPUB; USPAT;	OR	ON	2017/05/01 09:21

			USOCR; FPRS; EPO; JPO; IBM_TDB			
L8	3	L7 and ((@pd or @ad)<"20120726")	US-PGPUB; USPAT; USOCR; FPRS; EPO; JPO; IBM_TDB	OR	ON	2017/05/01 09:21
L9	2	(US-20070136523-$).did. or (US-8412879-$).did.	US-PGPUB; USPAT	OR	ON	2017/05/01 09:21
L10	201568	(format$3 near3 data) with (transfer or transferred or transferring or move or moved or moving or transmitted or transmission or write or written or writing or store or stored or storing)	US-PGPUB; USPAT; USOCR; FPRS; EPO; JPO; IBM_TDB	OR	ON	2017/05/01 09:21
L11	112	L6 and L10	US-PGPUB; USPAT; USOCR; FPRS; EPO; JPO; IBM_TDB	OR	ON	2017/05/01 09:21
L12	5	L5 and L11	US-PGPUB; USPAT; USOCR; FPRS; EPO; JPO; IBM_TDB	OR	ON	2017/05/01 09:21
L13	6	L4 and L11	US-PGPUB; USPAT; USOCR; FPRS; EPO; JPO; IBM_TDB	OR	ON	2017/05/01 09:21
L14	396	(bi-direction or bi-directional) near3 fabric	US-PGPUB; USPAT; USOCR; FPRS; EPO; JPO; IBM_TDB	OR	ON	2017/05/01 09:21
L15	5	L14 with (data adj manager)	US-PGPUB; USPAT; USOCR; FPRS;	OR	ON	2017/05/01 09:21

			EPO; JPO; IBM_TDB			
L16	29	(data near3 (port or input-output or I/O or IO)) and L11	US-PGPUB; USPAT; USOCR; FPRS; EPO; JPO; IBM_TDB	OR	ON	2017/05/01 09:21
L17	5	L5 and L16	US-PGPUB; USPAT; USOCR; FPRS; EPO; JPO; IBM_TDB	OR	ON	2017/05/01 09:21
L18	15	L16 and ((@pd or @ad)<"20120726")	US-PGPUB; USPAT; USOCR; FPRS; EPO; JPO; IBM_TDB	OR	ON	2017/05/01 09:21
L19	0	L4 and L18	US-PGPUB; USPAT; USOCR; FPRS; EPO; JPO; IBM_TDB	OR	ON	2017/05/01 09:21
L20	15	L6 and L18	US-PGPUB; USPAT; USOCR; FPRS; EPO; JPO; IBM_TDB	OR	ON	2017/05/01 09:21
L21	0	L14 and L20	US-PGPUB; USPAT; USOCR; FPRS; EPO; JPO; IBM_TDB	OR	ON	2017/05/01 09:21
L22	0	L5 and L20	US-PGPUB; USPAT; USOCR; FPRS; EPO; JPO; IBM_TDB	OR	ON	2017/05/01 09:21
L23	38362	(control adj information or control adj data or control adj meta-data or control	US-PGPUB;	OR	ON	2017/05/01 09:21

		adj metadata) near3 controller	USPAT; USOCR; FPRS; EPO; JPO; IBM_TDB			
L24	5	((control adj information or control adj data or control adj meta-data or control adj metadata) near3 controller) and L16	US-PGPUB; USPAT; USOCR; FPRS; EPO; JPO; IBM_TDB	OR	ON	2017/05/01 09:21
L25	3	L6 and L23 and L10 and L4	US-PGPUB; USPAT; USOCR; FPRS; EPO; JPO; IBM_TDB	OR	ON	2017/05/01 09:21
L26	5	L6 and L23 and L10	US-PGPUB; USPAT; USOCR; FPRS; EPO; JPO; IBM_TDB	OR	ON	2017/05/01 09:21
L27	13	L6 and L23	US-PGPUB; USPAT; USOCR; FPRS; EPO; JPO; IBM_TDB	OR	ON	2017/05/01 09:21
L28	7927	((Hyun) near2 (Lee)).INV.	US-PGPUB; USPAT; USOCR	OR	ON	2017/05/01 09:21
L29	26	((Chi-She) near2 (Chen)).INV.	US-PGPUB; USPAT; USOCR	OR	ON	2017/05/01 09:21
L30	113	((Jeffrey) near2 (Solomon)).INV.	US-PGPUB; USPAT; USOCR	OR	ON	2017/05/01 09:21
L31	183	((Scott) near2 (Milton)).INV.	US-PGPUB; USPAT; USOCR	OR	ON	2017/05/01 09:21
L32	103	((Jayesh) near2 (Bhakta)).INV.	US-PGPUB; USPAT; USOCR	OR	ON	2017/05/01 09:21
L33	5	(data adj manager same controller same memory adj controller) and L5 and (L10	US-PGPUB;	OR	ON	2017/05/01 09:21

		or L14)	USPAT; USOCR; FPRS; EPO; JPO; IBM_TDB			
L34	847	(hybrid near3 memory).ti.	US-PGPUB; USPAT; USOCR; FPRS; EPO; JPO; IBM_TDB	OR	ON	2017/05/01 09:21
L35	11	L6 and L34	US-PGPUB; USPAT; USOCR; FPRS; EPO; JPO; IBM_TDB	OR	ON	2017/05/01 09:21
L36	0	L35 and ((@pd or @ad)<"20120726")	US-PGPUB; USPAT; USOCR; FPRS; EPO; JPO; IBM_TDB	OR	ON	2017/05/01 09:21
L37	11	(data adj manager and memory adj controller) and L34	US-PGPUB; USPAT; USOCR; FPRS; EPO; JPO; IBM_TDB	OR	ON	2017/05/01 09:21
L38	0	L37 and ((@pd or @ad)<"20120726")	US-PGPUB; USPAT; USOCR; FPRS; EPO; JPO; IBM_TDB	OR	ON	2017/05/01 09:21
L39	2	(data adj manager) and L34 and ((@pd or @ad)<"20120726")	US-PGPUB; USPAT; USOCR; FPRS; EPO; JPO; IBM_TDB	OR	ON	2017/05/01 09:21
L40	37	("20080195806" | "6658507" | "5675725" | "20040190210" | "6336176" | "7409590" | "20100274953" | "6336174" | "5519663" | "6487623" | "20080104344" | "4420821" | "6799244" | "20020083368" | "4449205" | "8301833" | "7111142" | "20070192627" | "6158015" | "20120204079").PN.	US-PGPUB; USPAT; USOCR; FPRS; EPO; JPO; IBM_TDB	OR	ON	2017/05/01 09:21

L41	1	L6 and L40	US-PGPUB; USPAT; USOCR; FPRS; EPO; JPO; IBM_TDB	OR	ON	2017/05/01 09:21
L42	115	("2043099" | "20030158995" | "20040163027" | "20050044302" | "20050060488" | "20050132250" | "20050141273" | "20060039197" | "20060069896" | "20060080515" | "20060294295" | "20090031099" | "3562555" | "3916390" | "4234920" | "4965828" | "5430742" | "5519831" | "5563839" | "5870350" | "5874995" | "5890192" | "5953215" | "6023421" | "6112310" | "6145068" | "6199142" | "6216247" | "6421279" | "6459647" | "6487102" | "6769081" | "6799241" | "6944042" | "6948029" | "6952368" | "7053470" | "7062618" | "7089412" | "7102391" | "7155627" | "7200021" | "7234099" | "7409491" | "7411859" | "7421552" | "7467251" | "7600142" | "7716411" | "7818488" | "8233303").PN.	US-PGPUB; USPAT; USOCR; FPRS; EPO; JPO; IBM_TDB	OR	ON	2017/05/01 09:21
L43	0	L14 and L42	US-PGPUB; USPAT; USOCR; FPRS; EPO; JPO; IBM_TDB	OR	ON	2017/05/01 09:21
L44	0	L16 and L42	US-PGPUB; USPAT; USOCR; FPRS; EPO; JPO; IBM_TDB	OR	ON	2017/05/01 09:21
L45	0	L6 and L42	US-PGPUB; USPAT; USOCR; FPRS; EPO; JPO; IBM_TDB	OR	ON	2017/05/01 09:21
L46	1	"8874831".pn.	US-PGPUB; USPAT; USOCR; FPRS; EPO; JPO; IBM_TDB	OR	ON	2017/05/01 09:21
L47	8	"8301833".pn.	US-PGPUB;	OR	ON	2017/05/01 09:21

			USPAT; USOCR; FPRS; EPO; JPO; IBM_TDB			
L48	1	(US-8301833-$).did.	USPAT	OR	ON	2017/05/01 09:21
L49	3	L7 and ((@pd or @ad)<"20110728")	US-PGPUB; USPAT; USOCR; FPRS; EPO; JPO; IBM_TDB	OR	ON	2017/05/01 09:21
L50	1	"8874831".pn.	US-PGPUB; USPAT; USOCR; FPRS; EPO; JPO; IBM_TDB	OR	ON	2017/05/01 09:21
L51	82	("20020083368" | "20030158995" | "20040163027" | "20040190210" | "20050044302" | "20050060488" | "20050132250" | "20050141273" | "20060039197" | "20060069896" | "20060080515" | "20060294295" | "20070136523" | "20070192627" | "20080104344" | "20080195806" | "20090031099" | "20100274953" | "20110320804" | "20120204079" | "20140059170" | "2043099" | "3562555" | "3916390" | "4234920" | "4420821" | "4449205" | "4965828" | "5430742" | "5519663" | "5519831" | "5563839" | "5577213" | "5619644" | "5675725" | "5870350" | "5874995" | "5890192" | "5953215" | "6023421" | "6112310" | "6145068" | "6158015" | "6199142" | "6216247" | "6269382" | "6336174" | "6336176" | "6421279" | "6459647" | "6487102" | "6487623" | "6658507" | "6691209" | "6769081" | "6799241" | "6799244" | "6944042" | "6948029" | "6952368" | "7053470" | "7062618" | "7089412" | "7102391" | "7111142" | "7155627" | "7200021" | "7234099" | "7409491" | "7409590" | "7411859" | "7421552" | "7467251" | "7600142" | "7716411" | "7818488" | "8086955" | "8102614" | "8233303" | "8301833" | "8412879").PN.	US-PGPUB; USPAT; USOCR	OR	ON	2017/05/01 09:21
L52	8	"8301833".pn.	US-PGPUB; USPAT; USOCR; FPRS; EPO; JPO;	OR	ON	2017/05/01 09:21

			IBM_TDB			
L53	1	(US-8301833-$).did.	USPAT	OR	ON	2017/05/01 09:21
L54	1	(US-8102614-$).did.	USPAT	OR	ON	2017/05/01 09:21
L55	212	(format$3 near3 data) with (transfer or transferred or transferring or move or moved or moving or transmitted or transmission or write or written or writing or store or stored or storing) same (data adj manager)	US-PGPUB; USPAT; USOCR; FPRS; EPO; JPO; IBM_TDB	OR	ON	2017/05/01 09:21
L56	4	((first adj3 signals) and (second adj3 signals) and (third adj3 signals)) and L55	US-PGPUB; USPAT; USOCR; FPRS; EPO; JPO; IBM_TDB	OR	ON	2017/05/01 09:21
L57	12	((first adj3 signals) and (second adj3 signals) and (third adj3 signals)) and L34	US-PGPUB; USPAT; USOCR; FPRS; EPO; JPO; IBM_TDB	OR	ON	2017/05/01 09:21
L58	8	L57 and ((@pd or @ad)<"20110728")	US-PGPUB; USPAT; USOCR; FPRS; EPO; JPO; IBM_TDB	OR	ON	2017/05/01 09:21
L59	0	L37 and ((@pd or @ad)<"20110728")	US-PGPUB; USPAT; USOCR; FPRS; EPO; JPO; IBM_TDB	OR	ON	2017/05/01 09:21
L60	1604	G06F12/0638.CPC.	US-PGPUB; USPAT; USOCR; FPRS; EPO; JPO; IBM_TDB	OR	ON	2017/05/01 09:21
L61	18686	G06F12/0246.CPC.	US-PGPUB; USPAT; USOCR; FPRS; EPO; JPO; IBM_TDB	OR	ON	2017/05/01 09:21

L62	3404	G06F13/4243.CPC.	US-PGPUB; USPAT; USOCR; FPRS; EPO; JPO; IBM_TDB	OR	ON	2017/05/01 09:21
L63	8098	G11C7/1072.CPC.	US-PGPUB; USPAT; USOCR; FPRS; EPO; JPO; IBM_TDB	OR	ON	2017/05/01 09:21
L64	605	G11C14/0018.CPC.	US-PGPUB; USPAT; USOCR; FPRS; EPO; JPO; IBM_TDB	OR	ON	2017/05/01 09:21
L65	31181	L60 or L61 or L62 or L63 or L64	US-PGPUB; USPAT; USOCR; FPRS; EPO; JPO; IBM_TDB	OR	ON	2017/05/01 09:21
L66	5	L55 and L65	US-PGPUB; USPAT; USOCR; FPRS; EPO; JPO; IBM_TDB	OR	ON	2017/05/01 09:21
L67	0	L66 and ((@pd or @ad)<"20110728")	US-PGPUB; USPAT; USOCR; FPRS; EPO; JPO; IBM_TDB	OR	ON	2017/05/01 09:21
L68	12	L5 and L57	US-PGPUB; USPAT; USOCR; FPRS; EPO; JPO; IBM_TDB	OR	ON	2017/05/01 09:21
L69	3	L6 and L68	US-PGPUB; USPAT; USOCR; FPRS;	OR	ON	2017/05/01 09:21

			EPO; JPO; IBM_TDB			
L70	3	(data adj manager) and L68	US-PGPUB; USPAT; USOCR; FPRS; EPO; JPO; IBM_TDB	OR	ON	2017/05/01 09:21
L71	3	L57 and L65	US-PGPUB; USPAT; USOCR; FPRS; EPO; JPO; IBM_TDB	OR	ON	2017/05/01 09:21
L72	122	(data adj manager) and L65	US-PGPUB; USPAT; USOCR; FPRS; EPO; JPO; IBM_TDB	OR	ON	2017/05/01 09:21
L73	3	((first adj3 signals) and (second adj3 signals) and (third adj3 signals)) and L72	US-PGPUB; USPAT; USOCR; FPRS; EPO; JPO; IBM_TDB	OR	ON	2017/05/01 09:21
L74	10	("9158684" or "8874831" or "8301833").PN.	US-PGPUB; USPAT; USOCR; FPRS; EPO; JPO; IBM_TDB	OR	ON	2017/05/01 09:21
L75	212	("20020083368" | "20020199061" | "20030158995" | "20040088508" | "20040163027" | "20040190210" | "20050044302" | "20050060488" | "20050132250" | "20050141273" | "20060039197" | "20060069896" | "20060080515" | "20060294295" | "20070136523" | "20070192627" | "20080104344" | "20080195806" | "20090031099" | "20100274953" | "20110320804" | "20120204079" | "20120271990" | "20130019076" | "20130086309" | "20130254456" | "20130254497" | "20140059170" | "20140156919" | "20140156920" | "2043099" | "3562555" | "3916390" | "4234920" | "4420821" | "4449205" | "4965828" | "5430742" | "5519663" | "5519831" | "5563839" | "5577213" |	US-PGPUB; USPAT; USOCR; FPRS; EPO; JPO; IBM_TDB	OR	ON	2017/05/01 09:21

		"5619644" | "5675725" | "5870350" | "5874995" | "5890192" | "5953215" | "6023421" | "6112310" | "6145068" | "6158015" | "6199142" | "6216247" | "6269382" | "6336174" | "6336176" | "6421279" | "6459647" | "6487102" | "6487623" | "6658507" | "6691209" | "6721860" | "6769081" | "6799241" | "6799244" | "6816982" | "6944042" | "6948029" | "6952368" | "7053470" | "7062618" | "7089412" | "7102391" | "7111142" | "7155627" | "7200021" | "7234099" | "7353325" | "7409491" | "7409590" | "7411859" | "7421552" | "7467251" | "7600142" | "7716411" | "7818488" | "8086955" | "8102614" | "8233303" | "8301833" | "8407395" | "8412879" | "8516187" | "8671243" | "8677060" | "8874831" | "8880791" | "8904098" | "8904099").PN.				
L76	3	L72 and L75	US-PGPUB; USPAT; USOCR; FPRS; EPO; JPO; IBM_TDB	OR	ON	2017/05/01 09:21
L77	10992	G06F13/28.CPC.	US-PGPUB; USPAT; USOCR; FPRS; EPO; JPO; IBM_TDB	OR	ON	2017/05/01 09:21
L78	3097	G06F1/185.CPC.	US-PGPUB; USPAT; USOCR; FPRS; EPO; JPO; IBM_TDB	OR	ON	2017/05/01 09:21
L79	7290	G06F3/0613.CPC.	US-PGPUB; USPAT; USOCR; FPRS; EPO; JPO; IBM_TDB	OR	ON	2017/05/01 09:21
L80	11035	G06F3/0659.CPC.	US-PGPUB; USPAT; USOCR; FPRS; EPO; JPO; IBM_TDB	OR	ON	2017/05/01 09:21
L81	4886	G06F3/0685.CPC.	US-PGPUB;	OR	ON	2017/05/01 09:21

			USPAT; USOCR; FPRS; EPO; JPO; IBM_TDB			
L82	2394	G06F13/1694.CPC.	US-PGPUB; USPAT; USOCR; FPRS; EPO; JPO; IBM_TDB	OR	ON	2017/05/01 09:21
L83	4501	G06F13/4027.CPC.	US-PGPUB; USPAT; USOCR; FPRS; EPO; JPO; IBM_TDB	OR	ON	2017/05/01 09:21
L84	39528	L77 or L78 or L79 or L80 or L81 or L82 or L83	US-PGPUB; USPAT; USOCR; FPRS; EPO; JPO; IBM_TDB	OR	ON	2017/05/01 09:21
L85	245	(data adj manager) and L84	US-PGPUB; USPAT; USOCR; FPRS; EPO; JPO; IBM_TDB	OR	ON	2017/05/01 09:21
L86	34	L6 and L85	US-PGPUB; USPAT; USOCR; FPRS; EPO; JPO; IBM_TDB	OR	ON	2017/05/01 09:21
L87	7	((control adj information or control adj data or control adj signal or control adj metadata) near3 controller) and L86	US-PGPUB; USPAT; USOCR; FPRS; EPO; JPO; IBM_TDB	OR	ON	2017/05/01 09:21
L88	2	L87 and ((@pd or @ad)<"20110728")	US-PGPUB; USPAT; USOCR; FPRS; EPO; JPO; IBM_TDB	OR	ON	2017/05/01 09:21

L89	0	((read$3 near3 command) with (memory adj controller)) and L88	US-PGPUB; USPAT; USOCR; FPRS; EPO; JPO; IBM_TDB	OR	ON	2017/05/01 09:21
L90	5	((read$3 near3 command) with (memory adj controller)) and L87	US-PGPUB; USPAT; USOCR; FPRS; EPO; JPO; IBM_TDB	OR	ON	2017/05/01 09:21
L91	0	L90 and ((@pd or @ad)<"20110728")	US-PGPUB; USPAT; USOCR; FPRS; EPO; JPO; IBM_TDB	OR	ON	2017/05/01 09:21
L92	0	((first adj command) with (second adj command) with (memory adj controller)) and L88	US-PGPUB; USPAT; USOCR; FPRS; EPO; JPO; IBM_TDB	OR	ON	2017/05/01 09:21
L93	4	("20100110748" | "20110161569" | "9158684").PN.	US-PGPUB; USPAT; USOCR; FPRS; EPO; JPO; IBM_TDB	OR	ON	2017/05/01 09:21
L94	3	(US-20110161569-$ or US-20100110748-$).did. or (US-9158684-$).did.	US-PGPUB; USPAT	OR	ON	2017/05/01 09:21
L95	2	((read$3 near3 command) with (memory adj controller)) and L94	US-PGPUB; USPAT; USOCR; FPRS; EPO; JPO; IBM_TDB	OR	ON	2017/05/01 09:21
L96	1	L95 and ((@pd or @ad)<"20110728")	US-PGPUB; USPAT; USOCR; FPRS; EPO; JPO; IBM_TDB	OR	ON	2017/05/01 09:21
L97	0	L96 and (data adj manager)	US-PGPUB;	OR	ON	2017/05/01 09:21

			USPAT; USOCR; FPRS; EPO; JPO; IBM_TDB			
L98	1	L94 and (data adj manager)	US-PGPUB; USPAT; USOCR; FPRS; EPO; JPO; IBM_TDB	OR	ON	2017/05/01 09:21
L99	0	L98 and ((@pd or @ad)<"20110728")	US-PGPUB; USPAT; USOCR; FPRS; EPO; JPO; IBM_TDB	OR	ON	2017/05/01 09:21
L100	0	("Netlist, Inc.").AANM.	US-PGPUB; USPAT; USOCR	OR	ON	2017/05/01 09:21
L101	43	("Netlist").AANM.	US-PGPUB; USPAT; USOCR	OR	ON	2017/05/01 09:21
L102	658	((control adj information or control adj data or control adj signal or control adj metadata) near3 controller) and L77	US-PGPUB; USPAT; USOCR; FPRS; EPO; JPO; IBM_TDB	OR	ON	2017/05/01 09:21
L103	5	(data adj manager) and L102	US-PGPUB; USPAT; USOCR; FPRS; EPO; JPO; IBM_TDB	OR	ON	2017/05/01 09:21
L104	0	L103 and ((@pd or @ad)<"20110728")	US-PGPUB; USPAT; USOCR; FPRS; EPO; JPO; IBM_TDB	OR	ON	2017/05/01 09:21
L105	33	((read$3 near3 command) with (memory adj controller)) and L102	US-PGPUB; USPAT; USOCR; FPRS; EPO; JPO;	OR	ON	2017/05/01 09:21

			IBM_TDB			
L106	5	(data adj manager) and L105	US-PGPUB; USPAT; USOCR; FPRS; EPO; JPO; IBM_TDB	OR	ON	2017/05/01 09:21
L107	0	L106 and ((@pd or @ad)<"20110728")	US-PGPUB; USPAT; USOCR; FPRS; EPO; JPO; IBM_TDB	OR	ON	2017/05/01 09:21
L141	30	("20020053944" | "20030028733" | "20050249011" | "20050273548" | "20060212651" | "20070070669" | "20070147115" | "20070255898" | "20070288683" | "20080147968" | "20080235443" | "20080291727" | "20100322020" | "20110078496" | "20120317433" | "20140032820" | "20150058701" | "4882709" | "5490155" | "5799200" | "6026465" | "6065092" | "6571244" | "6614685" | "6693840" | "6810513" | "7136978" | "7519754" | "9043677" | "9361250").PN.	US-PGPUB; USPAT	OR	ON	2017/05/01 09:30
L142	1	("20100110748").PN.	US-PGPUB; USPAT	OR	ON	2017/05/01 09:37
L143	1	142 and ((@pd or @ad)<"20110728")	US-PGPUB; USPAT; USOCR; FPRS; EPO; JPO; IBM_TDB	OR	ON	2017/05/01 09:37
L144	1	142 and protocol and bus	US-PGPUB; USPAT; USOCR; FPRS; EPO; JPO; IBM_TDB	OR	ON	2017/05/01 09:38
L145	13	141 and protocol and bus	US-PGPUB; USPAT; USOCR; FPRS; EPO; JPO; IBM_TDB	OR	ON	2017/05/01 09:39
L146	0	(data adj manager) and 145	US-PGPUB; USPAT; USOCR;	OR	ON	2017/05/01 09:40

			FPRS; EPO; JPO; IBM_TDB			
L147	11	(data near5 transfer$3) and 145	US-PGPUB; USPAT; USOCR; FPRS; EPO; JPO; IBM_TDB	OR	ON	2017/05/01 09:44
L148	1	(data near5 transfer$3) and 142	US-PGPUB; USPAT; USOCR; FPRS; EPO; JPO; IBM_TDB	OR	ON	2017/05/01 09:44
L149	1	(data near5 width) and 142	US-PGPUB; USPAT; USOCR; FPRS; EPO; JPO; IBM_TDB	OR	ON	2017/05/01 09:45

EAST Search History (Interference)

Ref #	Hits	Search Query	DBs	Default Operator	Plurals	Time Stamp
L108	26	((Chi-She) near2 (Chen)).INV.	US-PGPUB; USPAT; * No UPAD	OR	ON	2017/05/01 09:21
L109	113	((Jeffrey) near2 (Solomon)).INV.	US-PGPUB; USPAT; * No UPAD	OR	ON	2017/05/01 09:21
L110	139	((Scott) near2 (Milton)).INV.	US-PGPUB; USPAT; * No UPAD	OR	ON	2017/05/01 09:21
L111	103	((Jayesh) near2 (Bhakta)).INV.	US-PGPUB; USPAT; * No UPAD	OR	ON	2017/05/01 09:21
L112	7927	((Hyun) near2 (Lee)).INV.	US-PGPUB; USPAT; * No UPAD	OR	ON	2017/05/01 09:21
L113	8182	L108 or L109 or L110 or L111 or L112	US-PGPUB; USPAT; * No UPAD	OR	ON	2017/05/01 09:21
L114	12	(data adj manager with controller with memory adj controller).clm.	US-PGPUB; USPAT; * No UPAD	OR	ON	2017/05/01 09:21
L115	5	L113 and L114	US-PGPUB; USPAT; * No UPAD	OR	ON	2017/05/01 09:21
L116	14031	(data adj path or memory adj segment).clm.	US-PGPUB; USPAT;	OR	ON	2017/05/01 09:21

			* No UPAD			
L117	56	L113 and L116	US-PGPUB; USPAT; * No UPAD	OR	ON	2017/05/01 09:21
L118	4	L114 and L117	US-PGPUB; USPAT; * No UPAD	OR	ON	2017/05/01 09:21
L119	11556	711/103.ccls.	US-PGPUB; USPAT; * No UPAD	OR	ON	2017/05/01 09:21
L120	1694	(data adj manager).clm.	US-PGPUB; USPAT; * No UPAD	OR	ON	2017/05/01 09:21
L121	753	G06F12/0638.CPC.	US-PGPUB; USPAT; * No UPAD	OR	ON	2017/05/01 09:21
L122	21	L113 and L119	US-PGPUB; USPAT; * No UPAD	OR	ON	2017/05/01 09:21
L123	3	L120 and L122	US-PGPUB; USPAT; * No UPAD	OR	ON	2017/05/01 09:21
L124	4433	G06F13/28.CPC.	US-PGPUB; USPAT; * No UPAD	OR	ON	2017/05/01 09:21
L125	12	L113 and L124	US-PGPUB; USPAT; * No UPAD	OR	ON	2017/05/01 09:21
L126	5	L114 and L125	US-PGPUB; USPAT; * No UPAD	OR	ON	2017/05/01 09:21
L127	1226	((read$3 near3 command) with (memory adj controller)).clm.	US-PGPUB; USPAT; * No UPAD	OR	ON	2017/05/01 09:21
L128	0	L126 and L127	US-PGPUB; USPAT; * No UPAD	OR	ON	2017/05/01 09:21
L129	35069	((control adj information or control adj data or control adj signal or control adj metadata) near3 controller).clm.	US-PGPUB; USPAT; * No UPAD	OR	ON	2017/05/01 09:21
L130	4	L125 and L129	US-PGPUB; USPAT; * No UPAD	OR	ON	2017/05/01 09:21
L131	4	L114 and L130	US-PGPUB; USPAT; * No UPAD	OR	ON	2017/05/01 09:21
L132	0	L131 and ((@pd or @ad)<"20110728")	US-PGPUB; USPAT; * No UPAD	OR	ON	2017/05/01 09:21
L133	43	("Netlist").AANM.	US-PGPUB; USPAT; * No UPAD	OR	ON	2017/05/01 09:21
L134	43	L113 and L133	US-PGPUB; USPAT; * No UPAD	OR	ON	2017/05/01 09:21
L135	3	L120 and L134	US-PGPUB; USPAT;	OR	ON	2017/05/01 09:21

			* No UPAD			
L136	0	L127 and L135	US-PGPUB; USPAT; * No UPAD	OR	ON	2017/05/01 09:21
L137	2	L129 and L135	US-PGPUB; USPAT; * No UPAD	OR	ON	2017/05/01 09:21
L138	4	L114 and L129	US-PGPUB; USPAT; * No UPAD	OR	ON	2017/05/01 09:21
L139	2	L114 and L137	US-PGPUB; USPAT; * No UPAD	OR	ON	2017/05/01 09:21

5/ 1/ 2017 9:45:38 AM
C:\ Users\ selmore\ Documents\ EAST\ Workspaces\ 14840865.wsp

Search Notes	Application/Control No.	Applicant(s)/Patent Under Reexamination
	14840865	LEE ET AL.
	Examiner	**Art Unit**
	STEPHEN ELMORE	2133

CPC- SEARCHED

Symbol	Date	Examiner
G06F 12/0638; G06F 12/0246; G06F 13/4243; G11C 7/1072; G11C 14/0018;	4/17/2016	SE
Search updated;	11/13/2016	SE
G06F 13/28; G06F 1/185; G06F 3/0613; G06F 3/0659;	11/13/2016	SE
G06F 3/0685; G06F 13/1694; G06F 13/4027;	11/13/2016	SE
Search updated	5/1/2017	SE

CPC COMBINATION SETS - SEARCHED

Symbol	Date	Examiner

US CLASSIFICATION SEARCHED

Class	Subclass	Date	Examiner
711	103, 111, 112, 114, 154, 156	4/17/2016	SE
365	185.33	4/17/2016	SE
Search updated		11/13/2016	SE
Search updated		5/1/2017	SE

SEARCH NOTES

Search Notes	Date	Examiner
EAST	4/17/2016	SE
Inventor Name Search for DP	4/17/2016	SE
Search Updated	11/13/2016	SE
Assignee searched	11/13/2016	SE
Search updated	5/1/2017	SE

INTERFERENCE SEARCH

US Class/ CPC Symbol	US Subclass / CPC Group	Date	Examiner
711	103	11/13/2016	SE
G06F	13/28	11/13/2016	SE
PGPUB Searched		11/13/2016	SE
Assignee Searched		11/13/2016	SE
Search updated		5/1/2017	SE

Doc code: IDS
Doc description: Information Disclosure Statement (IDS) Filed

PTO/SB/08a (03-15)
Approved for use through 07/31/2016. OMB 0651-0031
U.S. Patent and Trademark Office; U.S. DEPARTMENT OF COMMERCE
Under the Paperwork Reduction Act of 1995, no persons are required to respond to a collection of information unless it contains a valid OMB control number.

INFORMATION DISCLOSURE STATEMENT BY APPLICANT (**Not for submission under 37 CFR 1.99)**		
	Application Number	14840865
	Filing Date	2015-08-31
	First Named Inventor	LEE, HYUN
	Art Unit	2133
	Examiner Name	ELMORE, STEPHEN C.
	Attorney Docket Number	062453-036

U.S.PATENTS Remove

Examiner Initial*	Cite No	Patent Number	Kind Code[1]	Issue Date	Name of Patentee or Applicant of cited Document	Pages,Columns,Lines where Relevant Passages or Relevant Figures Appear
	1					

If you wish to add additional U.S. Patent citation information please click the Add button. Add

U.S.PATENT APPLICATION PUBLICATIONS Remove

Examiner Initial*	Cite No	Publication Number	Kind Code[1]	Publication Date	Name of Patentee or Applicant of cited Document	Pages,Columns,Lines where Relevant Passages or Relevant Figures Appear
	1					

If you wish to add additional U.S. Published Application citation information please click the Add button. Add

FOREIGN PATENT DOCUMENTS Remove

Examiner Initial*	Cite No	Foreign Document Number[3]	Country Code[2]	Kind Code[4]	Publication Date	Name of Patentee or Applicant of cited Document	Pages,Columns,Lines where Relevant Passages or Relevant Figures Appear	T[5]
	1							

If you wish to add additional Foreign Patent Document citation information please click the Add button Add

NON-PATENT LITERATURE DOCUMENTS Remove

Examiner Initials*	Cite No	Include name of the author (in CAPITAL LETTERS), title of the article (when appropriate), title of the item (book, magazine, journal, serial, symposium, catalog, etc), date, pages(s), volume-issue number(s), publisher, city and/or country where published.	T[5]

ALL REFERENCES CONSIDERED EXCEPT WHERE LINED THROUGH. /S.C.E/

INFORMATION DISCLOSURE STATEMENT BY APPLICANT (Not for submission under 37 CFR 1.99)		
	Application Number	14840865
	Filing Date	2015-08-31
	First Named Inventor	LEE, HYUN
	Art Unit	2133
	Examiner Name	ELMORE, STEPHEN C.
	Attorney Docket Number	062453-036

	1	~~File History 12/240,916 filed September 29, 2008~~	
	2	Bonella, Provisional Application for "ADVANCED DYNAMIC DISK MEMORY MODULE", 53 pages.	
	3	~~File History US Patent No. 8,671,243~~	
	4	Intel 1.8 Volt Intel StrataFlash Wireless Memory (L18).	
	5	Provisional Application No. 60/941,586 filed June 1, 2007	
	6	JEDEC STANDARD, Double Data Rate (DDR) SDRAM Specification, JESD79, June 2000, 77 pages	
	7	JEDEC STANDARD, DDR2 SDRAM Specification, JESD79-2B (Revision of JESD79-2A) January 2005, 113 pages.	
	8	Microsoft Computer Dictionary Fifth Edition, 10 pages.	
	9	Microsoft Windows 2000 Professional Resource Kit, 76 pages.	
	10	Data Sheet, 74F257A Quad 2-line to 1-line selector/multiplexer, non-inverting (3-State), Product specification, IC15 Data Handbook 1995 Mar 31, 10 pages.	
	11	Ex. 1004 - IPR2017-00587 Ron Maltiel CV, 7 pages.	

EFS Web 2.1.17

ALL REFERENCES CONSIDERED EXCEPT WHERE LINED THROUGH. /S.C.E/

INFORMATION DISCLOSURE STATEMENT BY APPLICANT (Not for submission under 37 CFR 1.99)		
	Application Number	14840865
	Filing Date	2015-08-31
	First Named Inventor	LEE, HYUN
	Art Unit	2133
	Examiner Name	ELMORE, STEPHEN C.
	Attorney Docket Number	062453-036

	12	Provisional Application No. 60/912,321 filed April 17, 2007	

If you wish to add additional non-patent literature document citation information please click the Add button Add

EXAMINER SIGNATURE

Examiner Signature	/STEPHEN C ELMORE/	Date Considered	05/01/2017

*EXAMINER: Initial if reference considered, whether or not citation is in conformance with MPEP 609. Draw line through a citation if not in conformance and not considered. Include copy of this form with next communication to applicant.

[1] See Kind Codes of USPTO Patent Documents at www.USPTO.GOV or MPEP 901.04. [2] Enter office that issued the document, by the two-letter code (WIPO Standard ST.3). [3] For Japanese patent documents, the indication of the year of the reign of the Emperor must precede the serial number of the patent document. [4] Kind of document by the appropriate symbols as indicated on the document under WIPO Standard ST.16 if possible. [5] Applicant is to place a check mark here if English language translation is attached.

ALL REFERENCES CONSIDERED EXCEPT WHERE LINED THROUGH. /S.C.E/

INFORMATION DISCLOSURE STATEMENT BY APPLICANT

(Not for submission under 37 CFR 1.99)

Application Number	14840865
Filing Date	2015-08-31
First Named Inventor	LEE, HYUN
Art Unit	2133
Examiner Name	ELMORE, STEPHEN C.
Attorney Docket Number	062453-036

CERTIFICATION STATEMENT

Please see 37 CFR 1.97 and 1.98 to make the appropriate selection(s):

That each item of information contained in the information disclosure statement was first cited in any communication from a foreign patent office in a counterpart foreign application not more than three months prior to the filing of the information disclosure statement. See 37 CFR 1.97(e)(1).

OR

☐ That no item of information contained in the information disclosure statement was cited in a communication from a foreign patent office in a counterpart foreign application, and, to the knowledge of the person signing the certification after making reasonable inquiry, no item of information contained in the information disclosure statement was known to any individual designated in 37 CFR 1.56(c) more than three months prior to the filing of the information disclosure statement. See 37 CFR 1.97(e)(2).

See attached certification statement.

The fee set forth in 37 CFR 1.17 (p) has been submitted herewith.

☒ A certification statement is not submitted herewith.

SIGNATURE

A signature of the applicant or representative is required in accordance with CFR 1.33, 10.18. Please see CFR 1.4(d) for the form of the signature.

Signature	/Khaled Shami/	Date (YYYY-MM-DD)	2017-04-20
Name/Print	Khaled Shami	Registration Number	38,745

This collection of information is required by 37 CFR 1.97 and 1.98. The information is required to obtain or retain a benefit by the public which is to file (and by the USPTO to process) an application. Confidentiality is governed by 35 U.S.C. 122 and 37 CFR 1.14. This collection is estimated to take 1 hour to complete, including gathering, preparing and submitting the completed application form to the USPTO. Time will vary depending upon the individual case. Any comments on the amount of time you require to complete this form and/or suggestions for reducing this burden, should be sent to the Chief Information Officer, U.S. Patent and Trademark Office, U.S. Department of Commerce, P.O. Box 1450, Alexandria, VA 22313-1450. DO NOT SEND FEES OR COMPLETED FORMS TO THIS ADDRESS. **SEND TO: Commissioner for Patents, P.O. Box 1450, Alexandria, VA 22313-1450.**

ALL REFERENCES CONSIDERED EXCEPT WHERE LINED THROUGH. /S.C.E/

Privacy Act Statement

The Privacy Act of 1974 (P.L. 93-579) requires that you be given certain information in connection with your submission of the attached form related to a patent application or patent. Accordingly, pursuant to the requirements of the Act, please be advised that: (1) the general authority for the collection of this information is 35 U.S.C. 2(b)(2); (2) furnishing of the information solicited is voluntary; and (3) the principal purpose for which the information is used by the U.S. Patent and Trademark Office is to process and/or examine your submission related to a patent application or patent. If you do not furnish the requested information, the U.S. Patent and Trademark Office may not be able to process and/or examine your submission, which may result in termination of proceedings or abandonment of the application or expiration of the patent.

The information provided by you in this form will be subject to the following routine uses:

1. The information on this form will be treated confidentially to the extent allowed under the Freedom of Information Act (5 U.S.C. 552) and the Privacy Act (5 U.S.C. 552a). Records from this system of records may be disclosed to the Department of Justice to determine whether the Freedom of Information Act requires disclosure of these record s.

2. A record from this system of records may be disclosed, as a routine use, in the course of presenting evidence to a court, magistrate, or administrative tribunal, including disclosures to opposing counsel in the course of settlement negotiations.

3. A record in this system of records may be disclosed, as a routine use, to a Member of Congress submitting a request involving an individual, to whom the record pertains, when the individual has requested assistance from the Member with respect to the subject matter of the record.

4. A record in this system of records may be disclosed, as a routine use, to a contractor of the Agency having need for the information in order to perform a contract. Recipients of information shall be required to comply with the requirements of the Privacy Act of 1974, as amended, pursuant to 5 U.S.C. 552a(m).

5. A record related to an International Application filed under the Patent Cooperation Treaty in this system of records may be disclosed, as a routine use, to the International Bureau of the World Intellectual Property Organization, pursuant to the Patent Cooperation Treaty.

6. A record in this system of records may be disclosed, as a routine use, to another federal agency for purposes of National Security review (35 U.S.C. 181) and for review pursuant to the Atomic Energy Act (42 U.S.C. 218(c)).

7. A record from this system of records may be disclosed, as a routine use, to the Administrator, General Services, or his/her designee, during an inspection of records conducted by GSA as part of that agency's responsibility to recommend improvements in records management practices and programs, under authority of 44 U.S.C. 2904 and 2906. Such disclosure shall be made in accordance with the GSA regulations governing inspection of records for this purpose, and any other relevant (i.e., GSA or Commerce) directive. Such disclosure shall not be used to make determinations about individuals.

8. A record from this system of records may be disclosed, as a routine use, to the public after either publication of the application pursuant to 35 U.S.C. 122(b) or issuance of a patent pursuant to 35 U.S.C. 151. Further, a record may be disclosed, subject to the limitations of 37 CFR 1.14, as a routine use, to the public if the record was filed in an application which became abandoned or in which the proceedings were terminated and which application is referenced by either a published application, an application open to public inspections or an issued patent.

9. A record from this system of records may be disclosed, as a routine use, to a Federal, State, or local law enforcement agency, if the USPTO becomes aware of a violation or potential violation of law or regulation.

ALL REFERENCES CONSIDERED EXCEPT WHERE LINED THROUGH. /S.C.E/

Doc code: IDS
Doc description: Information Disclosure Statement (IDS) Filed

PTO/SB/08a (03-15)
Approved for use through 07/31/2016. OMB 0651-0031
U.S. Patent and Trademark Office; U.S. DEPARTMENT OF COMMERCE
Under the Paperwork Reduction Act of 1995, no persons are required to respond to a collection of information unless it contains a valid OMB control number.

INFORMATION DISCLOSURE STATEMENT BY APPLICANT (**Not for submission under 37 CFR 1.99)**	Application Number	14840865
	Filing Date	2015-08-31
	First Named Inventor	LEE, HYUN
	Art Unit	2133
	Examiner Name	ELMORE, STEPHEN C.
	Attorney Docket Number	062453-036

U.S.PATENTS Remove

Examiner Initial*	Cite No	Patent Number	Kind Code[1]	Issue Date	Name of Patentee or Applicant of cited Document	Pages,Columns,Lines where Relevant Passages or Relevant Figures Appear
	1	5813029	A	1998-09-22	KLEIN	
	2	5991885	A	1999-11-23	CHANG et al.	
	3	9436600	B2	2016-09-06	LEE	

If you wish to add additional U.S. Patent citation information please click the Add button. Add

U.S.PATENT APPLICATION PUBLICATIONS Remove

Examiner Initial*	Cite No	Publication Number	Kind Code[1]	Publication Date	Name of Patentee or Applicant of cited Document	Pages,Columns,Lines where Relevant Passages or Relevant Figures Appear
	1	20120265952	A1	2012-10-18	KURITA	
	2	20120117402	A1	2012-05-10	MACHNICKI et al.	

If you wish to add additional U.S. Published Application citation information please click the Add button. Add

FOREIGN PATENT DOCUMENTS Remove

Examiner Initial*	Cite No	Foreign Document Number[3]	Country Code[2] i	Kind Code[4]	Publication Date	Name of Patentee or Applicant of cited Document	Pages,Columns,Lines where Relevant Passages or Relevant Figures Appear	T[5]

INFORMATION DISCLOSURE STATEMENT BY APPLICANT (Not for submission under 37 CFR 1.99)	Application Number	14840865
	Filing Date	2015-08-31
	First Named Inventor	LEE, HYUN
	Art Unit	2133
	Examiner Name	ELMORE, STEPHEN C.
	Attorney Docket Number	062453-036

	1						

If you wish to add additional Foreign Patent Document citation information please click the Add button Add

NON-PATENT LITERATURE DOCUMENTS Remove

Examiner Initials*	Cite No	Include name of the author (in CAPITAL LETTERS), title of the article (when appropriate), title of the item (book, magazine, journal, serial, symposium, catalog, etc), date, pages(s), volume-issue number(s), publisher, city and/or country where published.	T[5]
	1	File History for Application No. 13/905,048 filed May 29, 2013, 181 pages.	
	2	File History for Provisional Application 60/941,586, filed June 1, 2007, 23 pages.	
	3	Office Action dated August 19, 2016 of the Chinese Patent Application No. 201280047758.X	

If you wish to add additional non-patent literature document citation information please click the Add button Add

EXAMINER SIGNATURE

Examiner Signature		Date Considered	

*EXAMINER: Initial if reference considered, whether or not citation is in conformance with MPEP 609. Draw line through a citation if not in conformance and not considered. Include copy of this form with next communication to applicant.

[1] See Kind Codes of USPTO Patent Documents at www.USPTO.GOV or MPEP 901.04. [2] Enter office that issued the document, by the two-letter code (WIPO Standard ST.3). [3] For Japanese patent documents, the indication of the year of the reign of the Emperor must precede the serial number of the patent document. [4] Kind of document by the appropriate symbols as indicated on the document under WIPO Standard ST.16 if possible. [5] Applicant is to place a check mark here if English language translation is attached.

INFORMATION DISCLOSURE STATEMENT BY APPLICANT (Not for submission under 37 CFR 1.99)		
	Application Number	14840865
	Filing Date	2015-08-31
	First Named Inventor	LEE, HYUN
	Art Unit	2133
	Examiner Name	ELMORE, STEPHEN C.
	Attorney Docket Number	062453-036

CERTIFICATION STATEMENT

Please see 37 CFR 1.97 and 1.98 to make the appropriate selection(s):

That each item of information contained in the information disclosure statement was first cited in any communication from a foreign patent office in a counterpart foreign application not more than three months prior to the filing of the information disclosure statement. See 37 CFR 1.97(e)(1).

OR

☐ That no item of information contained in the information disclosure statement was cited in a communication from a foreign patent office in a counterpart foreign application, and, to the knowledge of the person signing the certification after making reasonable inquiry, no item of information contained in the information disclosure statement was known to any individual designated in 37 CFR 1.56(c) more than three months prior to the filing of the information disclosure statement. See 37 CFR 1.97(e)(2).

See attached certification statement.

☒ The fee set forth in 37 CFR 1.17 (p) has been submitted herewith.

☒ A certification statement is not submitted herewith.

SIGNATURE

A signature of the applicant or representative is required in accordance with CFR 1.33, 10.18. Please see CFR 1.4(d) for the form of the signature.

Signature	/Khaled Shami/	Date (YYYY-MM-DD)	2017-09-11
Name/Print	Khaled Shami	Registration Number	38,745

This collection of information is required by 37 CFR 1.97 and 1.98. The information is required to obtain or retain a benefit by the public which is to file (and by the USPTO to process) an application. Confidentiality is governed by 35 U.S.C. 122 and 37 CFR 1.14. This collection is estimated to take 1 hour to complete, including gathering, preparing and submitting the completed application form to the USPTO. Time will vary depending upon the individual case. Any comments on the amount of time you require to complete this form and/or suggestions for reducing this burden, should be sent to the Chief Information Officer, U.S. Patent and Trademark Office, U.S. Department of Commerce, P.O. Box 1450, Alexandria, VA 22313-1450. DO NOT SEND FEES OR COMPLETED FORMS TO THIS ADDRESS. **SEND TO: Commissioner for Patents, P.O. Box 1450, Alexandria, VA 22313-1450.**

Privacy Act Statement

The Privacy Act of 1974 (P.L. 93-579) requires that you be given certain information in connection with your submission of the attached form related to a patent application or patent. Accordingly, pursuant to the requirements of the Act, please be advised that: (1) the general authority for the collection of this information is 35 U.S.C. 2(b)(2); (2) furnishing of the information solicited is voluntary; and (3) the principal purpose for which the information is used by the U.S. Patent and Trademark Office is to process and/or examine your submission related to a patent application or patent. If you do not furnish the requested information, the U.S. Patent and Trademark Office may not be able to process and/or examine your submission, which may result in termination of proceedings or abandonment of the application or expiration of the patent.

The information provided by you in this form will be subject to the following routine uses:

1. The information on this form will be treated confidentially to the extent allowed under the Freedom of Information Act (5 U.S.C. 552) and the Privacy Act (5 U.S.C. 552a). Records from this system of records may be disclosed to the Department of Justice to determine whether the Freedom of Information Act requires disclosure of these record s.

2. A record from this system of records may be disclosed, as a routine use, in the course of presenting evidence to a court, magistrate, or administrative tribunal, including disclosures to opposing counsel in the course of settlement negotiations.

3. A record in this system of records may be disclosed, as a routine use, to a Member of Congress submitting a request involving an individual, to whom the record pertains, when the individual has requested assistance from the Member with respect to the subject matter of the record.

4. A record in this system of records may be disclosed, as a routine use, to a contractor of the Agency having need for the information in order to perform a contract. Recipients of information shall be required to comply with the requirements of the Privacy Act of 1974, as amended, pursuant to 5 U.S.C. 552a(m).

5. A record related to an International Application filed under the Patent Cooperation Treaty in this system of records may be disclosed, as a routine use, to the International Bureau of the World Intellectual Property Organization, pursuant to the Patent Cooperation Treaty.

6. A record in this system of records may be disclosed, as a routine use, to another federal agency for purposes of National Security review (35 U.S.C. 181) and for review pursuant to the Atomic Energy Act (42 U.S.C. 218(c)).

7. A record from this system of records may be disclosed, as a routine use, to the Administrator, General Services, or his/her designee, during an inspection of records conducted by GSA as part of that agency's responsibility to recommend improvements in records management practices and programs, under authority of 44 U.S.C. 2904 and 2906. Such disclosure shall be made in accordance with the GSA regulations governing inspection of records for this purpose, and any other relevant (i.e., GSA or Commerce) directive. Such disclosure shall not be used to make determinations about individuals.

8. A record from this system of records may be disclosed, as a routine use, to the public after either publication of the application pursuant to 35 U.S.C. 122(b) or issuance of a patent pursuant to 35 U.S.C. 151. Further, a record may be disclosed, subject to the limitations of 37 CFR 1.14, as a routine use, to the public if the record was filed in an application which became abandoned or in which the proceedings were terminated and which application is referenced by either a published application, an application open to public inspections or an issued patent.

9. A record from this system of records may be disclosed, as a routine use, to a Federal, State, or local law enforcement agency, if the USPTO becomes aware of a violation or potential violation of law or regulation.

Electronic Patent Application Fee Transmittal

Application Number:	14840865
Filing Date:	31-Aug-2015
Title of Invention:	FLASH-DRAM HYBRID MEMORY MODULE
First Named Inventor/Applicant Name:	Hyun Lee
Filer:	Khaled Shami/Jacqueline Allen
Attorney Docket Number:	062453-036

Filed as Large Entity

Filing Fees for Utility under 35 USC 111(a)

Description	Fee Code	Quantity	Amount	Sub-Total in USD($)
Basic Filing:				
Pages:				
Claims:				
Miscellaneous-Filing:				
Petition:				
Patent-Appeals-and-Interference:				
Post-Allowance-and-Post-Issuance:				
Extension-of-Time:				

Description	Fee Code	Quantity	Amount	Sub-Total in USD($)
Miscellaneous:				
Submission- Information Disclosure Stmt	1806	1	180	180
		Total in USD ($)		**180**

Electronic Acknowledgement Receipt

EFS ID:	30324418
Application Number:	14840865
International Application Number:	
Confirmation Number:	2445
Title of Invention:	FLASH-DRAM HYBRID MEMORY MODULE
First Named Inventor/Applicant Name:	Hyun Lee
Customer Number:	22204
Filer:	Khaled Shami/Jacqueline Allen
Filer Authorized By:	Khaled Shami
Attorney Docket Number:	062453-036
Receipt Date:	11-SEP-2017
Filing Date:	31-AUG-2015
Time Stamp:	15:33:57
Application Type:	Utility under 35 USC 111(a)

Payment information:

Submitted with Payment	yes
Payment Type	DA
Payment was successfully received in RAM	$180
RAM confirmation Number	091217INTEFSW00002343192380
Deposit Account	
Authorized User	
The Director of the USPTO is hereby authorized to charge indicated fees and credit any overpayment as follows:	

File Listing:

Document Number	Document Description	File Name	File Size(Bytes)/ Message Digest	Multi Part /.zip	Pages (if appl.)
1	Information Disclosure Statement (IDS) Form (SB08)	062453-036_SB08_2.pdf	1149912 cb0acb1c08991dda1a0e3294607c818ee9190655	no	4
Warnings:					
Information:					
2	Non Patent Literature	062453-036_CNOA.pdf	742500 a47f7557fdb02ed5ade389a879e6e2f31c98b44d	no	9
Warnings:					
Information:					
3	Fee Worksheet (SB06)	fee-info.pdf	30340 980a6757ab3a927521b6ff22e9610b1e8a221566	no	2
Warnings:					
Information:					
		Total Files Size (in bytes):	1922752		

This Acknowledgement Receipt evidences receipt on the noted date by the USPTO of the indicated documents, characterized by the applicant, and including page counts, where applicable. It serves as evidence of receipt similar to a Post Card, as described in MPEP 503.

New Applications Under 35 U.S.C. 111
If a new application is being filed and the application includes the necessary components for a filing date (see 37 CFR 1.53(b)-(d) and MPEP 506), a Filing Receipt (37 CFR 1.54) will be issued in due course and the date shown on this Acknowledgement Receipt will establish the filing date of the application.
National Stage of an International Application under 35 U.S.C. 371
If a timely submission to enter the national stage of an international application is compliant with the conditions of 35 U.S.C. 371 and other applicable requirements a Form PCT/DO/EO/903 indicating acceptance of the application as a national stage submission under 35 U.S.C. 371 will be issued in addition to the Filing Receipt, in due course.
New International Application Filed with the USPTO as a Receiving Office
If a new international application is being filed and the international application includes the necessary components for an international filing date (see PCT Article 11 and MPEP 1810), a Notification of the International Application Number and of the International Filing Date (Form PCT/RO/105) will be issued in due course, subject to prescriptions concerning national security, and the date shown on this Acknowledgement Receipt will establish the international filing date of the application.

IN THE UNITED STATES PATENT AND TRADEMARK OFFICE

APPLICANT:	Hyun LEE	CONFIRMATION NO.: 2445
APPLICATION NO.:	14/840,865	
FILING DATE:	August 31, 2015	
TITLE:	FLASH-DRAM HYBRID MEMORY MODULE	
EXAMINER:	Stephen C. ELMORE	
ART UNIT:	2133	

Mail Stop Amendment
Commissioner for Patents
P.O. Box 1450
Alexandria, VA 22313-1450

AMENDMENT AND/OR REPLY TO OFFICE ACTION

Sir:

In response to the Office Action mailed May 5, 2017, please amend the subject application as indicated.

Amendments to the Specification begin on page **2**.

Amendments to the Claims begin on page **3**.

Remarks begin on page **10**.

It is not believed that extensions of time are required beyond those that may otherwise be provided for in documents accompanying this paper. However, if additional extensions of time are necessary to prevent abandonment of this application, then such extensions of time are hereby petitioned under 37 C.F.R. § 1.136(a), and any additional fees required to continue prosecution or appeal of this application (including issue fee, fees for net addition of claims or forwarding to appeal) are hereby authorized to be charged to our Deposit Account No. 60-2034.

Samsung Electronics Co., Ltd.
Ex. 1011, p. 273

Electronic Patent Application Fee Transmittal

Application Number:	14840865
Filing Date:	31-Aug-2015
Title of Invention:	FLASH-DRAM HYBRID MEMORY MODULE
First Named Inventor/Applicant Name:	Hyun Lee
Filer:	Khaled Shami/Casey Berger
Attorney Docket Number:	062453-036

Filed as Large Entity

Filing Fees for Utility under 35 USC 111(a)

Description	Fee Code	Quantity	Amount	Sub-Total in USD($)
Basic Filing:				
Pages:				
Claims:				
INDEPENDENT CLAIMS IN EXCESS OF 3	1201	3	420	1260
Miscellaneous-Filing:				
Petition:				
Patent-Appeals-and-Interference:				
Post-Allowance-and-Post-Issuance:				

Description	Fee Code	Quantity	Amount	Sub-Total in USD($)
Extension-of-Time:				
Extension - 3 months with $0 paid	1253	1	1400	1400
Miscellaneous:				
		Total in USD ($)		**2660**

Electronic Acknowledgement Receipt

EFS ID:	30861819
Application Number:	14840865
International Application Number:	
Confirmation Number:	2445
Title of Invention:	FLASH-DRAM HYBRID MEMORY MODULE
First Named Inventor/Applicant Name:	Hyun Lee
Customer Number:	22204
Filer:	Khaled Shami/Casey Berger
Filer Authorized By:	Khaled Shami
Attorney Docket Number:	062453-036
Receipt Date:	06-NOV-2017
Filing Date:	31-AUG-2015
Time Stamp:	13:15:38
Application Type:	Utility under 35 USC 111(a)

Payment information:

Submitted with Payment	yes
Payment Type	CARD
Payment was successfully received in RAM	$2660
RAM confirmation Number	110617INTEFSW13165400
Deposit Account	
Authorized User	
The Director of the USPTO is hereby authorized to charge indicated fees and credit any overpayment as follows:	

File Listing:

Document Number	Document Description	File Name	File Size(Bytes)/ Message Digest	Multi Part /.zip	Pages (if appl.)
1		0016001000D_OAResponse_11062017.pdf	135900 a849b433ea2184fd7dc6d9d05a0c459f02de5781	yes	14
	Multipart Description/PDF files in .zip description				
	Document Description		**Start**	**End**	
	Applicant Arguments/Remarks Made in an Amendment		10	14	
	Claims		3	9	
	Specification		2	2	
	Amendment/Req. Reconsideration-After Non-Final Reject		1	1	
Warnings:					
Information:					
2	Fee Worksheet (SB06)	fee-info.pdf	32346 6a36885af0920d5b78808cd163785f683b718206	no	2
Warnings:					
Information:					
		Total Files Size (in bytes):	168246		

This Acknowledgement Receipt evidences receipt on the noted date by the USPTO of the indicated documents, characterized by the applicant, and including page counts, where applicable. It serves as evidence of receipt similar to a Post Card, as described in MPEP 503.

New Applications Under 35 U.S.C. 111
If a new application is being filed and the application includes the necessary components for a filing date (see 37 CFR 1.53(b)-(d) and MPEP 506), a Filing Receipt (37 CFR 1.54) will be issued in due course and the date shown on this Acknowledgement Receipt will establish the filing date of the application.
National Stage of an International Application under 35 U.S.C. 371
If a timely submission to enter the national stage of an international application is compliant with the conditions of 35 U.S.C. 371 and other applicable requirements a Form PCT/DO/EO/903 indicating acceptance of the application as a national stage submission under 35 U.S.C. 371 will be issued in addition to the Filing Receipt, in due course.
New International Application Filed with the USPTO as a Receiving Office
If a new international application is being filed and the international application includes the necessary components for an international filing date (see PCT Article 11 and MPEP 1810), a Notification of the International Application Number and of the International Filing Date (Form PCT/RO/105) will be issued in due course, subject to prescriptions concerning national security, and the date shown on this Acknowledgement Receipt will establish the international filing date of the application.

REMARKS

The Office Action mailed May 5, 2017 has been carefully considered. Reconsideration in view of the following remarks is respectfully requested.

Specification

The specification has been amended in order to address the objections raised in the Office Action.

Subject Matter Indicated Allowed or Allowable

Claims 14-16 are objected to as being dependent upon a rejected base claim, but would be allowable over the prior art of record if rewritten in independent form including all of the limitations of the base claim and any intervening claims.

Claims 14-16 have been rewritten in independent form to include the limitations of base claim 10 and are now in condition for allowance.

Claim Objection

Claim 10 has been amended to change “include” to “including” for grammatical accuracy.

Samsung Electronics Co., Ltd.
Ex. 1011, p. 279

Rejection(s) Under 35 U.S.C. § 102

Claims 2-13 and 17-22 stand rejected under pre-AIA 35 U.S.C. § 102(e) as allegedly being anticipated by U.S. Pat. Publ. No. 2010/0110748 to ***Best*** (hereinafter, "***Best***").

Applicants respectfully traverse.

Claim 2 has been amended to recite, *inter alia*,

> a controller operable to receive one or more commands from the memory controller of the host system in accordance with the first protocol, and in response to the one or more commands received from the memory controller of the host system, the controller generates and transmits one or more control signals to the data manager, wherein, in response to the one or more control signals, the data manager transfers data between the first volatile memory subsystem and the memory controller of the host system, and transfers data signals ~~between~~ from the non-volatile memory subsystem ~~and~~ to the second volatile memory subsystem by way of the third data bus and the second data bus.

Best does not disclose transferring data between a **first** volatile memory subsystem and a memory controller of a host system, and from a non-volatile memory subsystem to a **second** volatile memory subsystem. Rather, ***Best*** discloses transfer of data between the DRAM and an external controller device (by way of dedicated data buses 142 and 155 and shared data path 140); and transfer of data from the NV Memory **to the same DRAM** (by way of the dedicated data buses 144, 171, and 142). Thus in both these cases in ***Best***, the same DRAM is involved, whereas in the claimed arrangement different, first and second, volatile memory subsystems are involved.

In addition, in the claimed arrangement, data is transferred from the non-volatile memory subsystem to the volatile memory subsystem **via a third data bus in a second protocol and via second data bus in first protocol**. In this transfer, two different protocols are utilized. In ***Best***,

Samsung Electronics Co., Ltd.
Ex. 1011, p. 280

there is no discussion of different protocols in the description of the transfer of data from the NV Memory to the DRAM. While ***Best*** mentions protocol conversion at [0015], this is in the context of data transfer between the entire hybrid memory system 100 on the one hand, and the external controller device (not shown) on the other. It does not relate to conversion of protocols internally, within the hybrid memory system, during transfer of data from the NV Memory to the DRAM.

It will be appreciated that, a claim is anticipated under 35 U.S.C. § 102 only if each and every claim element is found, either expressly or inherently described, in a single prior art reference.[1] The aforementioned reasons clearly indicate the contrary, and withdrawal of the 35 U.S.C. § 102 rejection of claims 2-9 based on ***Best*** is respectfully urged.

With respect to claim 10, it recites a VM controller that is operable to generate a first command to the VM subsystem **in response to** the command received from the memory controller of the host system; and a second command to the VM subsystem that is **independent from** the command received from the memory controller of the host system. ***Best*** does not disclose two such commands: one in response to, and one independent from, commands received from the external controller device. Moreover, in the claimed arrangement, both of these commands can be used by the controller, which includes the VM controller, to direct the transfer of data between any two or more of the memory controller of the host system, the VM subsystem, and the NVM. Best does not disclose this capability—that is, the use of an independent command and a dependent command to direct such data transfer.

In view of the above, Applicants respectfully submit that claim 10, along with claims 11-13 dependent therefrom, are not anticipated by ***Best*** and the rejection under 35 U.S.C. § 102 should be withdrawn.

Turning to claim 17, it has been amended to recite, *inter alia*,

[1] Manual of Patent Examining Procedure (MPEP) § 2131. See also *Verdegaal Bros. v. Union Oil Co. of California*, 814 F.2d 628, 631, 2 USPQ2d 1051, 1053 (Fed. Cir. 1987).

Samsung Electronics Co., Ltd.
Ex. 1011, p. 281

> wherein transfer of data between the memory controller of the host system and the VM subsystem is by way of a first data bus and a first protocol, and transfer of data between the NVM and the VM subsystem is by way of the first and a second protocol respectively on a second data bus and a third data bus

As explained above with respect to claim 2, in this arrangement, data is transferred from the non-volatile memory subsystem to the volatile memory subsystem **via a third data bus in a second protocol and via second data bus in first protocol**. In this transfer, two different protocols are utilized. In ***Best***, there is no discussion of different protocols in the description of the transfer of data from the NV Memory to the DRAM. While ***Best*** mentions protocol conversion at [0015], this is in the context of data transfer between the entire hybrid memory system 100 on the one hand, and the external controller device (not shown) on the other. It does not relate to conversion of protocols internally, within the hybrid memory system, during transfer of data from the NV Memory to the DRAM. Accordingly, Applicants respectfully submit that claim 17, along with claims 18-22 dependent therefrom, are not anticipated by ***Best*** and the rejection under 35 U.S.C. § 102 should be withdrawn.

Conclusion

In view of the preceding discussion, Applicants respectfully urge that the claims of the present application define patentable subject matter and should be passed to allowance.

If the Examiner believes that a telephone call would help advance prosecution, the Examiner is kindly invited to call the undersigned attorney at the number below.

Samsung Electronics Co., Ltd.
Ex. 1011, p. 282

Please charge any additional required fees, including those necessary to obtain extensions of time to render timely the filing of the instant Amendment and/or Reply to Office Action, or credit any overpayment not otherwise credited, to our deposit account no. 60-2034.

Respectfully submitted,

SHAMI MESSINGER PLLC

Dated: November 6, 2017

/Khaled Shami/
Khaled Shami
Reg. No. 38,745

SHAMI MESSINGER PLLC
1000 Potomac Street, NW
Fifth Floor
Washington, D.C. 20007
Tel: 202-791-9025

Samsung Electronics Co., Ltd.
Ex. 1011, p. 283

Amendments to the Claims

The following Listing of Claims replaces all prior versions in the application:

1. (Canceled)

2. (Currently amended) A memory module comprising:

a data manager configured to be coupled to a memory controller of a host system using a data bus, the data manager is operable to communicate data signals with the memory controller of the host system by way of the data bus in accordance with a first protocol;

a first volatile memory subsystem coupled to the data manager using a first data bus, the first volatile memory subsystem is operable to communicate data signals with the data manager by way of the first data bus in accordance with the first protocol;

a second volatile memory subsystem coupled to the data manager using a second data bus, the second volatile memory subsystem is operable to communicate data signals with the data manager by way of the second data bus in accordance with the first protocol;

a non-volatile memory subsystem coupled to the data manager using a third data bus, the non-volatile memory subsystem is operable to communicate data signals with the data manager by way of the third data bus using a second protocol; and

a controller operable to receive one or more commands from the memory controller of the host system in accordance with the first protocol, and in response to the one or more commands received from the memory controller of the host system, the controller generates and transmits one or more control signals to the data manager, wherein, in response to the one or more control signals, the data manager transfers data between the first volatile memory subsystem and the memory controller of the host system, and transfers data signals ~~between~~ from the non-volatile memory subsystem ~~and~~ to the second volatile memory subsystem by way of the third data bus and the second data bus.

3. (Previously Presented) The memory module of claim 2, wherein the second protocol is different from the first protocol.

4. (Previously Presented) The memory module of claim 3, wherein the first protocol is selected from the group consisting of DDR, DDR2, DDR3, and DDR4 protocols.

Samsung Electronics Co., Ltd.
Ex. 1011, p. 284

5. (Previously Presented) The memory module of claim 2, wherein the data manager controls data traffic between any one of the first volatile memory subsystem and the second volatile memory subsystem and any one of the non-volatile memory subsystem and the memory controller of the host system based on one or more commands received from the controller.

6. (Previously Presented) The memory module of claim 2, wherein the data manager controls a starting time of a data transfer between any one of the first volatile memory subsystem and the second volatile memory subsystem and any one of the non-volatile memory subsystem and the memory controller of the host system based on one or more commands or control signals received from the controller.

7. (Previously Presented) The memory module of claim 2, wherein the data manager is configured as a bi-directional data transfer fabric.

8. (Previously Presented) The memory module of claim 2, wherein the data manager is operable to concurrently transfer data (i) between the first volatile memory subsystem and the memory controller of the host system, and (ii) between the non-volatile memory subsystem and the second volatile memory subsystem.

9. (Previously Presented) The memory module of claim 2, wherein the data manager further comprises a data formatting subsystem operable to format data to be transferred via the data bus, the first data bus, the second data bus and the third data bus.

10. (Currently amended) A memory module couplable to a memory controller of a host system, the memory module comprising:

a non-volatile memory (NVM) subsystem coupled to a NVM controller;

a data manager coupled to a data manager controller and to the NVM subsystem;

a volatile memory (VM) subsystem coupled to a VM controller and to the data manager; and

a controller operable to receive a command from the memory controller of the host system, the controller ~~include~~ including the NVM controller, the VM controller, and the data manager controller, the VM controller is operable (i) to generate and transmit a first command to the VM subsystem in response to the command received from the memory controller of the host

Samsung Electronics Co., Ltd.
Ex. 1011, p. 285

system, and (ii) to generate and transmit a second command to the VM subsystem, wherein the second command is generated by the VM controller independently from the command received from the memory controller of the host system, and wherein the controller is operable to direct (i) operation of the NVM subsystem by way of the NVM controller, (ii) operation of the VM subsystem by way of the VM controller, and (iii) operation of the data manager by way of the data manager controller to transfer data between any two or more of the memory controller of the host system, the VM subsystem, and the NVM subsystem based on any one of the first command and the second command.

11. (Previously Presented) The memory module of claim 10, wherein the controller further includes an interface scheduler, the interface scheduler schedules the VM subsystem operation and the NVM subsystem operation such that no resource conflict occurs in the data manager.

12. (Previously Presented) The memory module of claim 10, wherein the controller further includes an interface scheduler, the interface scheduler assigns time slots for the VM controller and the NVM controller based on current command status and a pending command received or to be received from the memory controller of the host system.

13. (Previously Presented) The memory module of claim 10, wherein the VM subsystem is operable to exchange data with the NVM subsystem by way of the data manager in response to the second command received from the VM controller.

14. (Currently amended) A memory module couplable to a memory controller of a host system, the memory module comprising:

a non-volatile memory (NVM) subsystem coupled to a NVM controller;

a data manager coupled to a data manager controller and to the NVM subsystem;

a volatile memory (VM) subsystem coupled to a VM controller and to the data manager; and

a controller operable to receive a command from the memory controller of the host system, the controller ~~include~~ including the NVM controller, the VM controller, and the data manager controller, the VM controller is operable (i) to generate and transmit a first command to the VM subsystem in response to the command received from the memory controller of the host system,

Samsung Electronics Co., Ltd.
Ex. 1011, p. 286

and (ii) to generate and transmit a second command to the VM subsystem, wherein the second command is generated by the VM controller independently from the command received from the memory controller of the host system, and wherein the controller is operable to direct (i) operation of the NVM subsystem by way of the NVM controller, (ii) operation of the VM subsystem by way of the VM controller, and (iii) operation of the data manager by way of the data manager controller to transfer data between any two or more of the memory controller of the host system, the VM subsystem, and the NVM subsystem based on any one of the first command and the second command~~The memory module of claim 10~~, wherein the controller further includes an interface scheduler, if the command received by the controller from the memory controller of the host system is a read or write operation from/to the VM subsystem that conflicts with an operation being executed by VM subsystem in response to the second command, then the interface scheduler instructs the VM controller (i) to abort the current operation of VM subsystem, and (ii) to execute an operation in response to the first command.

15. (Currently amended) A memory module couplable to a memory controller of a host system, the memory module comprising:

a non-volatile memory (NVM) subsystem coupled to a NVM controller;

a data manager coupled to a data manager controller and to the NVM subsystem;

a volatile memory (VM) subsystem coupled to a VM controller and to the data manager; and

a controller operable to receive a command from the memory controller of the host system, the controller ~~include~~ including the NVM controller, the VM controller, and the data manager controller, the VM controller is operable (i) to generate and transmit a first command to the VM subsystem in response to the command received from the memory controller of the host system, and (ii) to generate and transmit a second command to the VM subsystem, wherein the second command is generated by the VM controller independently from the command received from the memory controller of the host system, and wherein the controller is operable to direct (i) operation of the NVM subsystem by way of the NVM controller, (ii) operation of the VM subsystem by way of the VM controller, and (iii) operation of the data manager by way of the data manager controller to transfer data between any two or more of the memory controller of the host system, the VM subsystem, and the NVM subsystem based on any one of the first command

Samsung Electronics Co., Ltd.
Ex. 1011, p. 287

and the second command~~The memory module of claim 10~~, wherein the controller further includes an interface scheduler, if the command received by the controller from the memory controller of the host system is a read or write operation from/to the VM subsystem that conflicts with an operation being executed by VM subsystem in response to the second command, then the interface scheduler instructs the VM controller to complete the current operation of VM subsystem before executing an operation in response to the first command.

16. (Currently amended) A memory module couplable to a memory controller of a host system, the memory module comprising:

a non-volatile memory (NVM) subsystem coupled to a NVM controller;

a data manager coupled to a data manager controller and to the NVM subsystem;

a volatile memory (VM) subsystem coupled to a VM controller and to the data manager; and

a controller operable to receive a command from the memory controller of the host system, the controller ~~include~~ including the NVM controller, the VM controller, and the data manager controller, the VM controller is operable (i) to generate and transmit a first command to the VM subsystem in response to the command received from the memory controller of the host system, and (ii) to generate and transmit a second command to the VM subsystem, wherein the second command is generated by the VM controller independently from the command received from the memory controller of the host system, and wherein the controller is operable to direct (i) operation of the NVM subsystem by way of the NVM controller, (ii) operation of the VM subsystem by way of the VM controller, and (iii) operation of the data manager by way of the data manager controller to transfer data between any two or more of the memory controller of the host system, the VM subsystem, and the NVM subsystem based on any one of the first command and the second command~~The memory module of claim 10~~, wherein the controller further includes an interface scheduler, if the command received by the controller from the memory controller of the host system is a read or write operation from/to the VM subsystem that conflicts with an operation being executed by VM subsystem in response to the second command, then the interface scheduler instructs the VM controller (i) to halt the current operation of VM subsystem, (ii) to execute an operation in response to the first command, and (iii) to resume the operation in response to the second command.

Samsung Electronics Co., Ltd.
Ex. 1011, p. 288

17. (Currently amended) A memory module couplable to a memory controller of a host system, the memory module comprising:

a non-volatile memory (NVM) subsystem;

a data manager coupled to a data manager controller and to the NVM subsystem;

a volatile memory (VM) subsystem coupled to the data manager; and

a controller operable to receive a read command from the memory controller of the host system, the controller is configured to determine, in response to the read command, a target address for a requested data, and if requested data is not stored in the VM subsystem, then the controller (i) initiates data transfer operations from the NVM subsystem to the VM subsystem by way of the data manager, and (ii) initiates data transfer operations from the VM subsystem to the memory controller of the host system by way of the data manager, wherein transfer of data between the memory controller of the host system and the VM subsystem is by way of a first data bus and a first protocol, and transfer of data between the NVM and the VM subsystem is by way of the first and a second protocol respectively on a second data bus and a third data bus.

18. (Previously Presented) The memory module of claim 17, wherein the controller is operable to direct (i) operation of the NVM subsystem by way of a NVM controller, (ii) operation of the VM subsystem by way of a VM controller, and (iii) operation of the data manager by way of a data manager controller to transfer data between any two or more of the memory controller of the host system, the VM subsystem, and the NVM subsystem based on the read command.

19. (Previously Presented) The memory module of claim 17, wherein the data manager controls a starting time of a data transfer between any two or more of the memory controller of the host system, the VM subsystem, and the NVM subsystem based on the read command.

20. (Previously Presented) The memory module of claim 17, wherein the VM subsystem includes first and second VM subsystems.

21. (Previously Presented) The memory module of claim 20, wherein the data manager controls a starting time of a data transfer between any one of the first VM subsystem and the

Samsung Electronics Co., Ltd.
Ex. 1011, p. 289

second VM subsystem and any one of the NVM subsystem and the memory controller of the host system based on the read command.

22. (Previously Presented) The memory module of claim 20, wherein the data manager is operable to concurrently transfer data (i) between the first VM subsystem and the memory controller of the host system, and (ii) between the NVM subsystem and the second VM subsystem.

Samsung Electronics Co., Ltd.
Ex. 1011, p. 290

Amendments to the Specification

Please amend paragraph [0001] as follows:

[0001] This application is a continuation of U.S. Patent Application No. 14/489,269, filed September 17, 2014, titled, "FLASH-DRAM HYBRID MEMORY MODULE", now U.S. Patent No. 9,158,684, issued October 13, 2015, which is a continuation of U.S. Patent No. 8,874,831, issued, October 28, 2014, titled , "FLASH-DRAM HYBRID MEMORY MODULE", which claims the benefit of provisional patent application serial no. 61/512,871, filed July 28, 2011, and is a continuation-in-part of US Patent No. 8,301,833, issued October 30, 2012, which is a continuation of U.S. patent application serial no. 12/131,873, filed June 2, 2008, which claims the benefit of U.S. provisional patent application serial no. 60/941,586, filed June 1, 2007, the contents of all of which are incorporated herein by reference in their entirety.

Samsung Electronics Co., Ltd.
Ex. 1011, p. 291

PTO/SB/06 (09-11)
Approved for use through 1/31/2014. OMB 0651-0032
U.S. Patent and Trademark Office; U.S. DEPARTMENT OF COMMERCE
Under the Paperwork Reduction Act of 1995, no persons are required to respond to a collection of information unless it displays a valid OMB control number.

PATENT APPLICATION FEE DETERMINATION RECORD Substitute for Form PTO-875	Application or Docket Number 14/840,865	Filing Date 08/31/2015	☐ To be Mailed

ENTITY: ☒ LARGE ☐ SMALL ☐ MICRO

APPLICATION AS FILED – PART I

FOR	(Column 1) NUMBER FILED	(Column 2) NUMBER EXTRA	RATE ($)	FEE ($)
☐ BASIC FEE (37 CFR 1.16(a), (b), or (c))	N/A	N/A	N/A	
☐ SEARCH FEE (37 CFR 1.16(k), (i), or (m))	N/A	N/A	N/A	
☐ EXAMINATION FEE (37 CFR 1.16(o), (p), or (q))	N/A	N/A	N/A	
TOTAL CLAIMS (37 CFR 1.16(i))	minus 20 =	*	X $ =	
INDEPENDENT CLAIMS (37 CFR 1.16(h))	minus 3 =	*	X $ =	
☐ APPLICATION SIZE FEE (37 CFR 1.16(s))	If the specification and drawings exceed 100 sheets of paper, the application size fee due is $310 ($155 for small entity) for each additional 50 sheets or fraction thereof. See 35 U.S.C. 41(a)(1)(G) and 37 CFR 1.16(s).			
☐ MULTIPLE DEPENDENT CLAIM PRESENT (37 CFR 1.16(j))				
* If the difference in column 1 is less than zero, enter "0" in column 2.			TOTAL	

APPLICATION AS AMENDED – PART II

AMENDMENT 11/06/2017

	(Column 1) CLAIMS REMAINING AFTER AMENDMENT		(Column 2) HIGHEST NUMBER PREVIOUSLY PAID FOR	(Column 3) PRESENT EXTRA	RATE ($)	ADDITIONAL FEE ($)
Total (37 CFR 1.16(i))	* 21	Minus	** 21	= 0	X $80 =	0
Independent (37 CFR 1.16(h))	* 6	Minus	***3	= 3	X $420 =	1260
☐ Application Size Fee (37 CFR 1.16(s))						
☐ FIRST PRESENTATION OF MULTIPLE DEPENDENT CLAIM (37 CFR 1.16(j))						
					TOTAL ADD'L FEE	**1260**

AMENDMENT

	(Column 1) CLAIMS REMAINING AFTER AMENDMENT		(Column 2) HIGHEST NUMBER PREVIOUSLY PAID FOR	(Column 3) PRESENT EXTRA	RATE ($)	ADDITIONAL FEE ($)
Total (37 CFR 1.16(i))	*	Minus	**	=	X $ =	
Independent (37 CFR 1.16(h))	*	Minus	***	=	X $ =	
☐ Application Size Fee (37 CFR 1.16(s))						
☐ FIRST PRESENTATION OF MULTIPLE DEPENDENT CLAIM (37 CFR 1.16(j))						
					TOTAL ADD'L FEE	

* If the entry in column 1 is less than the entry in column 2, write "0" in column 3.
** If the "Highest Number Previously Paid For" IN THIS SPACE is less than 20, enter "20".
*** If the "Highest Number Previously Paid For" IN THIS SPACE is less than 3, enter "3".
The "Highest Number Previously Paid For" (Total or Independent) is the highest number found in the appropriate box in column 1.

LIE
AMANDA FORD

This collection of information is required by 37 CFR 1.16. The information is required to obtain or retain a benefit by the public which is to file (and by the USPTO to process) an application. Confidentiality is governed by 35 U.S.C. 122 and 37 CFR 1.14. This collection is estimated to take 12 minutes to complete, including gathering, preparing, and submitting the completed application form to the USPTO. Time will vary depending upon the individual case. Any comments on the amount of time you require to complete this form and/or suggestions for reducing this burden, should be sent to the Chief Information Officer, U.S. Patent and Trademark Office, U.S. Department of Commerce, P.O. Box 1450, Alexandria, VA 22313-1450. DO NOT SEND FEES OR COMPLETED FORMS TO THIS ADDRESS. **SEND TO: Commissioner for Patents, P.O. Box 1450, Alexandria, VA 22313-1450.**
If you need assistance in completing the form, call 1-800-PTO-9199 and select option 2.

UNITED STATES PATENT AND TRADEMARK OFFICE

UNITED STATES DEPARTMENT OF COMMERCE
United States Patent and Trademark Office
Address: COMMISSIONER FOR PATENTS
P.O. Box 1450
Alexandria, Virginia 22313-1450
www.uspto.gov

NOTICE OF ALLOWANCE AND FEE(S) DUE

22204 7590 11/17/2017
NIXON PEABODY, LLP
799 Ninth Street, NW
SUITE 500
WASHINGTON, DC 20001

EXAMINER
ELMORE, STEPHEN C

ART UNIT	PAPER NUMBER
2133	

DATE MAILED: 11/17/2017

APPLICATION NO.	FILING DATE	FIRST NAMED INVENTOR	ATTORNEY DOCKET NO.	CONFIRMATION NO.
14/840,865	08/31/2015	Hyun Lee	062453-036	2445

TITLE OF INVENTION: FLASH-DRAM HYBRID MEMORY MODULE

APPLN. TYPE	ENTITY STATUS	ISSUE FEE DUE	PUBLICATION FEE DUE	PREV. PAID ISSUE FEE	TOTAL FEE(S) DUE	DATE DUE
nonprovisional	UNDISCOUNTED	$960	$0	$0	$960	02/20/2018

THE APPLICATION IDENTIFIED ABOVE HAS BEEN EXAMINED AND IS ALLOWED FOR ISSUANCE AS A PATENT. PROSECUTION ON THE MERITS IS CLOSED. THIS NOTICE OF ALLOWANCE IS NOT A GRANT OF PATENT RIGHTS. THIS APPLICATION IS SUBJECT TO WITHDRAWAL FROM ISSUE AT THE INITIATIVE OF THE OFFICE OR UPON PETITION BY THE APPLICANT. SEE 37 CFR 1.313 AND MPEP 1308.

THE ISSUE FEE AND PUBLICATION FEE (IF REQUIRED) MUST BE PAID WITHIN THREE MONTHS FROM THE MAILING DATE OF THIS NOTICE OR THIS APPLICATION SHALL BE REGARDED AS ABANDONED. THIS STATUTORY PERIOD CANNOT BE EXTENDED. SEE 35 U.S.C. 151. THE ISSUE FEE DUE INDICATED ABOVE DOES NOT REFLECT A CREDIT FOR ANY PREVIOUSLY PAID ISSUE FEE IN THIS APPLICATION. IF AN ISSUE FEE HAS PREVIOUSLY BEEN PAID IN THIS APPLICATION (AS SHOWN ABOVE), THE RETURN OF PART B OF THIS FORM WILL BE CONSIDERED A REQUEST TO REAPPLY THE PREVIOUSLY PAID ISSUE FEE TOWARD THE ISSUE FEE NOW DUE.

HOW TO REPLY TO THIS NOTICE:

I. Review the ENTITY STATUS shown above. If the ENTITY STATUS is shown as SMALL or MICRO, verify whether entitlement to that entity status still applies.

If the ENTITY STATUS is the same as shown above, pay the TOTAL FEE(S) DUE shown above.

If the ENTITY STATUS is changed from that shown above, on PART B - FEE(S) TRANSMITTAL, complete section number 5 titled "Change in Entity Status (from status indicated above)".

For purposes of this notice, small entity fees are 1/2 the amount of undiscounted fees, and micro entity fees are 1/2 the amount of small entity fees.

II. PART B - FEE(S) TRANSMITTAL, or its equivalent, must be completed and returned to the United States Patent and Trademark Office (USPTO) with your ISSUE FEE and PUBLICATION FEE (if required). If you are charging the fee(s) to your deposit account, section "4b" of Part B - Fee(s) Transmittal should be completed and an extra copy of the form should be submitted. If an equivalent of Part B is filed, a request to reapply a previously paid issue fee must be clearly made, and delays in processing may occur due to the difficulty in recognizing the paper as an equivalent of Part B.

III. All communications regarding this application must give the application number. Please direct all communications prior to issuance to Mail Stop ISSUE FEE unless advised to the contrary.

IMPORTANT REMINDER: Maintenance fees are due in utility patents issuing on applications filed on or after Dec. 12, 1980. It is patentee's responsibility to ensure timely payment of maintenance fees when due. More information is available at www.uspto.gov/PatentMaintenanceFees.

PTOL-85 (Rev. 02/11)

Samsung Electronics Co., Ltd.
Ex. 1011, p. 293

PART B - FEE(S) TRANSMITTAL

Complete and send this form, together with applicable fee(s), to: Mail **Mail Stop ISSUE FEE**
Commissioner for Patents
P.O. Box 1450
Alexandria, Virginia 22313-1450
or Fax (571)-273-2885

INSTRUCTIONS: This form should be used for transmitting the ISSUE FEE and PUBLICATION FEE (if required). Blocks 1 through 5 should be completed where appropriate. All further correspondence including the Patent, advance orders and notification of maintenance fees will be mailed to the current correspondence address as indicated unless corrected below or directed otherwise in Block 1, by (a) specifying a new correspondence address; and/or (b) indicating a separate "FEE ADDRESS" for maintenance fee notifications.

CURRENT CORRESPONDENCE ADDRESS (Note: Use Block 1 for any change of address)

22204 7590 11/17/2017
NIXON PEABODY, LLP
799 Ninth Street, NW
SUITE 500
WASHINGTON, DC 20001

Note: A certificate of mailing can only be used for domestic mailings of the Fee(s) Transmittal. This certificate cannot be used for any other accompanying papers. Each additional paper, such as an assignment or formal drawing, must have its own certificate of mailing or transmission.

Certificate of Mailing or Transmission

I hereby certify that this Fee(s) Transmittal is being deposited with the United States Postal Service with sufficient postage for first class mail in an envelope addressed to the Mail Stop ISSUE FEE address above, or being facsimile transmitted to the USPTO (571) 273-2885, on the date indicated below.

(Depositor's name)
(Signature)
(Date)

APPLICATION NO.	FILING DATE	FIRST NAMED INVENTOR	ATTORNEY DOCKET NO.	CONFIRMATION NO.
14/840,865	08/31/2015	Hyun Lee	062453-036	2445

TITLE OF INVENTION: FLASH-DRAM HYBRID MEMORY MODULE

APPLN. TYPE	ENTITY STATUS	ISSUE FEE DUE	PUBLICATION FEE DUE	PREV. PAID ISSUE FEE	TOTAL FEE(S) DUE	DATE DUE
nonprovisional	UNDISCOUNTED	$960	$0	$0	$960	02/20/2018

EXAMINER	ART UNIT	CLASS-SUBCLASS
ELMORE, STEPHEN C	2133	711-103000

1. Change of correspondence address or indication of "Fee Address" (37 CFR 1.363).
- ❑ Change of correspondence address (or Change of Correspondence Address form PTO/SB/122) attached.
- ❑ "Fee Address" indication (or "Fee Address" Indication form PTO/SB/47; Rev 03-02 or more recent) attached. **Use of a Customer Number is required.**

2. For printing on the patent front page, list
(1) The names of up to 3 registered patent attorneys or agents OR, alternatively,
(2) The name of a single firm (having as a member a registered attorney or agent) and the names of up to 2 registered patent attorneys or agents. If no name is listed, no name will be printed.

1_____
2_____
3_____

3. ASSIGNEE NAME AND RESIDENCE DATA TO BE PRINTED ON THE PATENT (print or type)

PLEASE NOTE: Unless an assignee is identified below, no assignee data will appear on the patent. If an assignee is identified below, the document has been filed for recordation as set forth in 37 CFR 3.11. Completion of this form is NOT a substitute for filing an assignment.

(A) NAME OF ASSIGNEE (B) RESIDENCE: (CITY and STATE OR COUNTRY)

Please check the appropriate assignee category or categories (will not be printed on the patent) : ❑ Individual ❑ Corporation or other private group entity ❑ Government

4a. The following fee(s) are submitted:
- ❑ Issue Fee
- ❑ Publication Fee (No small entity discount permitted)
- ❑ Advance Order - # of Copies _____

4b. Payment of Fee(s): **(Please first reapply any previously paid issue fee shown above)**
- ❑ A check is enclosed.
- ❑ Payment by credit card. Form PTO-2038 is attached.
- ❑ The director is hereby authorized to charge the required fee(s), any deficiency, or credits any overpayment, to Deposit Account Number _____ (enclose an extra copy of this form).

5. **Change in Entity Status** (from status indicated above)
- ❑ Applicant certifying micro entity status. See 37 CFR 1.29 — NOTE: Absent a valid certification of Micro Entity Status (see forms PTO/SB/15A and 15B), issue fee payment in the micro entity amount will not be accepted at the risk of application abandonment.
- ❑ Applicant asserting small entity status. See 37 CFR 1.27 — NOTE: If the application was previously under micro entity status, checking this box will be taken to be a notification of loss of entitlement to micro entity status.
- ❑ Applicant changing to regular undiscounted fee status. — NOTE: Checking this box will be taken to be a notification of loss of entitlement to small or micro entity status, as applicable.

NOTE: This form must be signed in accordance with 37 CFR 1.31 and 1.33. See 37 CFR 1.4 for signature requirements and certifications.

Authorized Signature _____ Date _____

Typed or printed name _____ Registration No. _____

PTOL-85 Part B (10-13) Approved for use through 10/31/2013. OMB 0651-0033 U.S. Patent and Trademark Office; U.S. DEPARTMENT OF COMMERCE

Samsung Electronics Co., Ltd.
Ex. 1011, p. 294

UNITED STATES PATENT AND TRADEMARK OFFICE

UNITED STATES DEPARTMENT OF COMMERCE
United States Patent and Trademark Office
Address: COMMISSIONER FOR PATENTS
P.O. Box 1450
Alexandria, Virginia 22313-1450
www.uspto.gov

APPLICATION NO.	FILING DATE	FIRST NAMED INVENTOR	ATTORNEY DOCKET NO.	CONFIRMATION NO.
14/840,865	08/31/2015	Hyun Lee	062453-036	2445

22204 7590 11/17/2017
NIXON PEABODY, LLP
799 Ninth Street, NW
SUITE 500
WASHINGTON, DC 20001

EXAMINER
ELMORE, STEPHEN C

ART UNIT	PAPER NUMBER
2133	

DATE MAILED: 11/17/2017

Determination of Patent Term Adjustment under 35 U.S.C. 154 (b)
(Applications filed on or after May 29, 2000)

The Office has discontinued providing a Patent Term Adjustment (PTA) calculation with the Notice of Allowance.

Section 1(h)(2) of the AIA Technical Corrections Act amended 35 U.S.C. 154(b)(3)(B)(i) to eliminate the requirement that the Office provide a patent term adjustment determination with the notice of allowance. See Revisions to Patent Term Adjustment, 78 Fed. Reg. 19416, 19417 (Apr. 1, 2013). Therefore, the Office is no longer providing an initial patent term adjustment determination with the notice of allowance. The Office will continue to provide a patent term adjustment determination with the Issue Notification Letter that is mailed to applicant approximately three weeks prior to the issue date of the patent, and will include the patent term adjustment on the patent. Any request for reconsideration of the patent term adjustment determination (or reinstatement of patent term adjustment) should follow the process outlined in 37 CFR 1.705.

Any questions regarding the Patent Term Extension or Adjustment determination should be directed to the Office of Patent Legal Administration at (571)-272-7702. Questions relating to issue and publication fee payments should be directed to the Customer Service Center of the Office of Patent Publication at 1-(888)-786-0101 or (571)-272-4200.

OMB Clearance and PRA Burden Statement for PTOL-85 Part B

The Paperwork Reduction Act (PRA) of 1995 requires Federal agencies to obtain Office of Management and Budget approval before requesting most types of information from the public. When OMB approves an agency request to collect information from the public, OMB (i) provides a valid OMB Control Number and expiration date for the agency to display on the instrument that will be used to collect the information and (ii) requires the agency to inform the public about the OMB Control Number's legal significance in accordance with 5 CFR 1320.5(b).

The information collected by PTOL-85 Part B is required by 37 CFR 1.311. The information is required to obtain or retain a benefit by the public which is to file (and by the USPTO to process) an application. Confidentiality is governed by 35 U.S.C. 122 and 37 CFR 1.14. This collection is estimated to take 12 minutes to complete, including gathering, preparing, and submitting the completed application form to the USPTO. Time will vary depending upon the individual case. Any comments on the amount of time you require to complete this form and/or suggestions for reducing this burden, should be sent to the Chief Information Officer, U.S. Patent and Trademark Office, U.S. Department of Commerce, P.O. Box 1450, Alexandria, Virginia 22313-1450. DO NOT SEND FEES OR COMPLETED FORMS TO THIS ADDRESS. SEND TO: Commissioner for Patents, P.O. Box 1450, Alexandria, Virginia 22313-1450. Under the Paperwork Reduction Act of 1995, no persons are required to respond to a collection of information unless it displays a valid OMB control number.

Privacy Act Statement

The Privacy Act of 1974 (P.L. 93-579) requires that you be given certain information in connection with your submission of the attached form related to a patent application or patent. Accordingly, pursuant to the requirements of the Act, please be advised that: (1) the general authority for the collection of this information is 35 U.S.C. 2(b)(2); (2) furnishing of the information solicited is voluntary; and (3) the principal purpose for which the information is used by the U.S. Patent and Trademark Office is to process and/or examine your submission related to a patent application or patent. If you do not furnish the requested information, the U.S. Patent and Trademark Office may not be able to process and/or examine your submission, which may result in termination of proceedings or abandonment of the application or expiration of the patent.

The information provided by you in this form will be subject to the following routine uses:

1. The information on this form will be treated confidentially to the extent allowed under the Freedom of Information Act (5 U.S.C. 552) and the Privacy Act (5 U.S.C 552a). Records from this system of records may be disclosed to the Department of Justice to determine whether disclosure of these records is required by the Freedom of Information Act.
2. A record from this system of records may be disclosed, as a routine use, in the course of presenting evidence to a court, magistrate, or administrative tribunal, including disclosures to opposing counsel in the course of settlement negotiations.
3. A record in this system of records may be disclosed, as a routine use, to a Member of Congress submitting a request involving an individual, to whom the record pertains, when the individual has requested assistance from the Member with respect to the subject matter of the record.
4. A record in this system of records may be disclosed, as a routine use, to a contractor of the Agency having need for the information in order to perform a contract. Recipients of information shall be required to comply with the requirements of the Privacy Act of 1974, as amended, pursuant to 5 U.S.C. 552a(m).
5. A record related to an International Application filed under the Patent Cooperation Treaty in this system of records may be disclosed, as a routine use, to the International Bureau of the World Intellectual Property Organization, pursuant to the Patent Cooperation Treaty.
6. A record in this system of records may be disclosed, as a routine use, to another federal agency for purposes of National Security review (35 U.S.C. 181) and for review pursuant to the Atomic Energy Act (42 U.S.C. 218(c)).
7. A record from this system of records may be disclosed, as a routine use, to the Administrator, General Services, or his/her designee, during an inspection of records conducted by GSA as part of that agency's responsibility to recommend improvements in records management practices and programs, under authority of 44 U.S.C. 2904 and 2906. Such disclosure shall be made in accordance with the GSA regulations governing inspection of records for this purpose, and any other relevant (i.e., GSA or Commerce) directive. Such disclosure shall not be used to make determinations about individuals.
8. A record from this system of records may be disclosed, as a routine use, to the public after either publication of the application pursuant to 35 U.S.C. 122(b) or issuance of a patent pursuant to 35 U.S.C. 151. Further, a record may be disclosed, subject to the limitations of 37 CFR 1.14, as a routine use, to the public if the record was filed in an application which became abandoned or in which the proceedings were terminated and which application is referenced by either a published application, an application open to public inspection or an issued patent.
9. A record from this system of records may be disclosed, as a routine use, to a Federal, State, or local law enforcement agency, if the USPTO becomes aware of a violation or potential violation of law or regulation.

Notice of Allowability	Application No. 14/840,865	Applicant(s) LEE ET AL.	
	Examiner STEPHEN ELMORE	Art Unit 2133	AIA (First Inventor to File) Status No

-- The MAILING DATE of this communication appears on the cover sheet with the correspondence address--

All claims being allowable, PROSECUTION ON THE MERITS IS (OR REMAINS) CLOSED in this application. If not included herewith (or previously mailed), a Notice of Allowance (PTOL-85) or other appropriate communication will be mailed in due course. **THIS NOTICE OF ALLOWABILITY IS NOT A GRANT OF PATENT RIGHTS.** This application is subject to withdrawal from issue at the initiative of the Office or upon petition by the applicant. See 37 CFR 1.313 and MPEP 1308.

1. ☒ This communication is responsive to *the Amendment filed 11/6/2017*.
   ☐ A declaration(s)/affidavit(s) under **37 CFR 1.130(b)** was/were filed on_____.
2. ☐ An election was made by the applicant in response to a restriction requirement set forth during the interview on _____; the restriction requirement and election have been incorporated into this action.
3. ☒ The allowed claim(s) is/are *2-22*. As a result of the allowed claim(s), you may be eligible to benefit from the **Patent Prosecution Highway** program at a participating intellectual property office for the corresponding application. For more information, please see http://www.uspto.gov/patents/init_events/pph/index.jsp or send an inquiry to PPHfeedback@uspto.gov.
4. ☐ Acknowledgment is made of a claim for foreign priority under 35 U.S.C. § 119(a)-(d) or (f).

   Certified copies:

   a) ☐ All b) ☐ Some *c) ☐ None of the:
   1. ☐ Certified copies of the priority documents have been received.
   2. ☐ Certified copies of the priority documents have been received in Application No. _____ .
   3. ☐ Copies of the certified copies of the priority documents have been received in this national stage application from the International Bureau (PCT Rule 17.2(a)).

   * Certified copies not received: _____.

Applicant has THREE MONTHS FROM THE "MAILING DATE" of this communication to file a reply complying with the requirements noted below. Failure to timely comply will result in ABANDONMENT of this application.
THIS THREE-MONTH PERIOD IS NOT EXTENDABLE.

5. ☐ CORRECTED DRAWINGS (as "replacement sheets") must be submitted.
   ☐ including changes required by the attached Examiner's Amendment / Comment or in the Office action of Paper No./Mail Date _____.

   Identifying indicia such as the application number (see 37 CFR 1.84(c)) should be written on the drawings in the front (not the back) of each sheet. Replacement sheet(s) should be labeled as such in the header according to 37 CFR 1.121(d).
6. ☐ DEPOSIT OF and/or INFORMATION about the deposit of BIOLOGICAL MATERIAL must be submitted. Note the attached Examiner's comment regarding REQUIREMENT FOR THE DEPOSIT OF BIOLOGICAL MATERIAL.

Attachment(s)

1. ☐ Notice of References Cited (PTO-892)
2. ☒ Information Disclosure Statements (PTO/SB/08), Paper No./Mail Date 9/11/2017
3. ☐ Examiner's Comment Regarding Requirement for Deposit of Biological Material
4. ☐ Interview Summary (PTO-413), Paper No./Mail Date _____ .
5. ☒ Examiner's Amendment/Comment
6. ☐ Examiner's Statement of Reasons for Allowance
7. ☐ Other _____.

/STEPHEN ELMORE/
Primary Examiner, Art Unit 2133

Samsung Electronics Co., Ltd.
Ex. 1011, p. 297

The present application is being examined under the pre-AIA first to invent provisions.

EXAMINER'S COMMENT

Information Disclosure Statement

1. The Information Disclosure Statement (IDS) filed 9/11/2017 contains two "lined-through" entries in the category Non-Patent Literature Documents, Cites No. 1 and 2, which have not been considered.

The IDS entries fail to comply with 37 CFR § 1.98(a)(1) because they are and have been identified as "File History…" in "Non-Patent Literature Documents" of the IDS and therefore do not comply with 37 CFR § 1.98(a)(1).

Each publication requested to be considered under 37 CFR § 1.98(a)(1) is required to be an individual publication listed individually on form PTO-1449. Aggregated listings (i.e., such as, an electronic "file history") do not comply because the aggregate "history" is a compilation of multiple documents with each document having distinct and/or different publication dates, and so is not an individual document publication according to 37 CFR § 1.98(a)(1).

2. The Information Disclosure Statement (IDS) filed 9/11/2017 also contains a "lined-through" entry in the category Non-Patent Literature Documents, Cite No. 3, which has not been considered because the listed document is not in the English language, and the listing fails to comply with 37 CFR 1.98 (a)(3).

Doc code: IDS
Doc description: Information Disclosure Statement (IDS) Filed

PTO/SB/08a (03-15)
Approved for use through 07/31/2016. OMB 0651-0031
U.S. Patent and Trademark Office; U.S. DEPARTMENT OF COMMERCE
Under the Paperwork Reduction Act of 1995, no persons are required to respond to a collection of information unless it contains a valid OMB control number.

INFORMATION DISCLOSURE STATEMENT BY APPLICANT

(Not for submission under 37 CFR 1.99)

Application Number	14840865
Filing Date	2015-08-31
First Named Inventor	LEE, HYUN
Art Unit	2133
Examiner Name	ELMORE, STEPHEN C.
Attorney Docket Number	062453-036

U.S.PATENTS Remove

Examiner Initial*	Cite No	Patent Number	Kind Code[1]	Issue Date	Name of Patentee or Applicant of cited Document	Pages,Columns,Lines where Relevant Passages or Relevant Figures Appear
	1	5813029	A	1998-09-22	KLEIN	
	2	5991885	A	1999-11-23	CHANG et al.	
	3	9436600	B2	2016-09-06	LEE	

If you wish to add additional U.S. Patent citation information please click the Add button. Add

U.S.PATENT APPLICATION PUBLICATIONS Remove

Examiner Initial*	Cite No	Publication Number	Kind Code[1]	Publication Date	Name of Patentee or Applicant of cited Document	Pages,Columns,Lines where Relevant Passages or Relevant Figures Appear
	1	20120265952	A1	2012-10-18	KURITA	
	2	20120117402	A1	2012-05-10	MACHNICKI et al.	

If you wish to add additional U.S. Published Application citation information please click the Add button. Add

FOREIGN PATENT DOCUMENTS Remove

Examiner Initial*	Cite No	Foreign Document Number[3]	Country Code[2]¡	Kind Code[4]	Publication Date	Name of Patentee or Applicant of cited Document	Pages,Columns,Lines where Relevant Passages or Relevant Figures Appear	T[5]

ALL REFERENCES CONSIDERED EXCEPT WHERE LINED THROUGH. /S.C.E/

INFORMATION DISCLOSURE STATEMENT BY APPLICANT (Not for submission under 37 CFR 1.99)		
	Application Number	14840865
	Filing Date	2015-08-31
	First Named Inventor	LEE, HYUN
	Art Unit	2133
	Examiner Name	ELMORE, STEPHEN C.
	Attorney Docket Number	062453-036

	1						

If you wish to add additional Foreign Patent Document citation information please click the Add button Add

NON-PATENT LITERATURE DOCUMENTS Remove

Examiner Initials*	Cite No	Include name of the author (in CAPITAL LETTERS), title of the article (when appropriate), title of the item (book, magazine, journal, serial, symposium, catalog, etc), date, pages(s), volume-issue number(s), publisher, city and/or country where published.	T[5]
	1	File History for Application No. 13/905,048 filed May 29, 2013, 181 pages.	
	2	File History for Provisional Application 60/941,586, filed June 1, 2007, 23 pages.	
	3	Office Action dated August 19, 2016 of the Chinese Patent Application No. 201280047758.X	

If you wish to add additional non-patent literature document citation information please click the Add button Add

EXAMINER SIGNATURE

Examiner Signature	/STEPHEN C ELMORE/	Date Considered	11/13/2017

*EXAMINER: Initial if reference considered, whether or not citation is in conformance with MPEP 609. Draw line through a citation if not in conformance and not considered. Include copy of this form with next communication to applicant.

[1] See Kind Codes of USPTO Patent Documents at www.USPTO.GOV or MPEP 901.04. [2] Enter office that issued the document, by the two-letter code (WIPO Standard ST.3). [3] For Japanese patent documents, the indication of the year of the reign of the Emperor must precede the serial number of the patent document. [4] Kind of document by the appropriate symbols as indicated on the document under WIPO Standard ST.16 if possible. [5] Applicant is to place a check mark here if English language translation is attached.

ALL REFERENCES CONSIDERED EXCEPT WHERE LINED THROUGH. /S.C.E/

INFORMATION DISCLOSURE STATEMENT BY APPLICANT (Not for submission under 37 CFR 1.99)		
	Application Number	14840865
	Filing Date	2015-08-31
	First Named Inventor	LEE, HYUN
	Art Unit	2133
	Examiner Name	ELMORE, STEPHEN C.
	Attorney Docket Number	062453-036

CERTIFICATION STATEMENT

Please see 37 CFR 1.97 and 1.98 to make the appropriate selection(s):

That each item of information contained in the information disclosure statement was first cited in any communication from a foreign patent office in a counterpart foreign application not more than three months prior to the filing of the information disclosure statement. See 37 CFR 1.97(e)(1).

OR

☐ That no item of information contained in the information disclosure statement was cited in a communication from a foreign patent office in a counterpart foreign application, and, to the knowledge of the person signing the certification after making reasonable inquiry, no item of information contained in the information disclosure statement was known to any individual designated in 37 CFR 1.56(c) more than three months prior to the filing of the information disclosure statement. See 37 CFR 1.97(e)(2).

See attached certification statement.

X The fee set forth in 37 CFR 1.17 (p) has been submitted herewith.

X A certification statement is not submitted herewith.

SIGNATURE

A signature of the applicant or representative is required in accordance with CFR 1.33, 10.18. Please see CFR 1.4(d) for the form of the signature.

Signature	/Khaled Shami/	Date (YYYY-MM-DD)	2017-09-11
Name/Print	Khaled Shami	Registration Number	38,745

This collection of information is required by 37 CFR 1.97 and 1.98. The information is required to obtain or retain a benefit by the public which is to file (and by the USPTO to process) an application. Confidentiality is governed by 35 U.S.C. 122 and 37 CFR 1.14. This collection is estimated to take 1 hour to complete, including gathering, preparing and submitting the completed application form to the USPTO. Time will vary depending upon the individual case. Any comments on the amount of time you require to complete this form and/or suggestions for reducing this burden, should be sent to the Chief Information Officer, U.S. Patent and Trademark Office, U.S. Department of Commerce, P.O. Box 1450, Alexandria, VA 22313-1450. DO NOT SEND FEES OR COMPLETED FORMS TO THIS ADDRESS. **SEND TO: Commissioner for Patents, P.O. Box 1450, Alexandria, VA 22313-1450.**

ALL REFERENCES CONSIDERED EXCEPT WHERE LINED THROUGH. /S.C.E/

Privacy Act Statement

The Privacy Act of 1974 (P.L. 93-579) requires that you be given certain information in connection with your submission of the attached form related to a patent application or patent. Accordingly, pursuant to the requirements of the Act, please be advised that: (1) the general authority for the collection of this information is 35 U.S.C. 2(b)(2); (2) furnishing of the information solicited is voluntary; and (3) the principal purpose for which the information is used by the U.S. Patent and Trademark Office is to process and/or examine your submission related to a patent application or patent. If you do not furnish the requested information, the U.S. Patent and Trademark Office may not be able to process and/or examine your submission, which may result in termination of proceedings or abandonment of the application or expiration of the patent.

The information provided by you in this form will be subject to the following routine uses:

1. The information on this form will be treated confidentially to the extent allowed under the Freedom of Information Act (5 U.S.C. 552) and the Privacy Act (5 U.S.C. 552a). Records from this system of records may be disclosed to the Department of Justice to determine whether the Freedom of Information Act requires disclosure of these record s.

2. A record from this system of records may be disclosed, as a routine use, in the course of presenting evidence to a court, magistrate, or administrative tribunal, including disclosures to opposing counsel in the course of settlement negotiations.

3. A record in this system of records may be disclosed, as a routine use, to a Member of Congress submitting a request involving an individual, to whom the record pertains, when the individual has requested assistance from the Member with respect to the subject matter of the record.

4. A record in this system of records may be disclosed, as a routine use, to a contractor of the Agency having need for the information in order to perform a contract. Recipients of information shall be required to comply with the requirements of the Privacy Act of 1974, as amended, pursuant to 5 U.S.C. 552a(m).

5. A record related to an International Application filed under the Patent Cooperation Treaty in this system of records may be disclosed, as a routine use, to the International Bureau of the World Intellectual Property Organization, pursuant to the Patent Cooperation Treaty.

6. A record in this system of records may be disclosed, as a routine use, to another federal agency for purposes of National Security review (35 U.S.C. 181) and for review pursuant to the Atomic Energy Act (42 U.S.C. 218(c)).

7. A record from this system of records may be disclosed, as a routine use, to the Administrator, General Services, or his/her designee, during an inspection of records conducted by GSA as part of that agency's responsibility to recommend improvements in records management practices and programs, under authority of 44 U.S.C. 2904 and 2906. Such disclosure shall be made in accordance with the GSA regulations governing inspection of records for this purpose, and any other relevant (i.e., GSA or Commerce) directive. Such disclosure shall not be used to make determinations about individuals.

8. A record from this system of records may be disclosed, as a routine use, to the public after either publication of the application pursuant to 35 U.S.C. 122(b) or issuance of a patent pursuant to 35 U.S.C. 151. Further, a record may be disclosed, subject to the limitations of 37 CFR 1.14, as a routine use, to the public if the record was filed in an application which became abandoned or in which the proceedings were terminated and which application is referenced by either a published application, an application open to public inspections or an issued patent.

9. A record from this system of records may be disclosed, as a routine use, to a Federal, State, or local law enforcement agency, if the USPTO becomes aware of a violation or potential violation of law or regulation.

ALL REFERENCES CONSIDERED EXCEPT WHERE LINED THROUGH. /S.C.E/

Search Notes	Application/Control No.	Applicant(s)/Patent Under Reexamination
	14840865	LEE ET AL.
	Examiner	**Art Unit**
	STEPHEN ELMORE	2133

CPC- SEARCHED

Symbol	Date	Examiner
G06F 12/0638; G06F 12/0246; G06F 13/4243; G11C 7/1072; G11C 14/0018;	4/17/2016	SE
Search updated;	11/13/2016	SE
G06F 13/28; G06F 1/185; G06F 3/0613; G06F 3/0659;	11/13/2016	SE
G06F 3/0685; G06F 13/1694; G06F 13/4027;	11/13/2016	SE
Search updated	5/1/2017	SE
Search Updated	11/13/2017	SE

CPC COMBINATION SETS - SEARCHED

Symbol	Date	Examiner

US CLASSIFICATION SEARCHED

Class	Subclass	Date	Examiner
711	103, 111, 112, 114, 154, 156	4/17/2016	SE
365	185.33	4/17/2016	SE
Search updated		11/13/2016	SE
Search updated		5/1/2017	SE
Search Updated		11/13/2017	SE

* See search history printout included with this form or the SEARCH NOTES box below to determine the scope of the search.

SEARCH NOTES

Search Notes	Date	Examiner
EAST	4/17/2016	SE
Inventor Name Search for DP	4/17/2016	SE
Search Updated	11/13/2016	SE

SEARCH NOTES		
Search Notes	**Date**	**Examiner**
Assignee searched	11/13/2016	SE
Search updated	5/1/2017	SE
Search Updated	11/13/2017	SE

INTERFERENCE SEARCH			
US Class/ CPC Symbol	**US Subclass / CPC Group**	**Date**	**Examiner**
711	103	11/13/2016	SE
G06F	13/28	11/13/2016	SE
PGPUB Searched		11/13/2016	SE
Assignee Searched		11/13/2016	SE
Search updated		5/1/2017	SE
Search Updated		11/13/2017	SE

Samsung Electronics Co., Ltd.
Ex. 1011, p. 304

UNITED STATES PATENT AND TRADEMARK OFFICE

UNITED STATES DEPARTMENT OF COMMERCE
United States Patent and Trademark Office
Address: COMMISSIONER FOR PATENTS
P.O. Box 1450
Alexandria, Virginia 22313-1450
www.uspto.gov

BIB DATA SHEET

CONFIRMATION NO. 2445

SERIAL NUMBER	FILING or 371(c) DATE	CLASS	GROUP ART UNIT	ATTORNEY DOCKET NO.
14/840,865	08/31/2015 RULE	711	2133	062453-036

APPLICANTS
Netlist, Inc., Irvine, CA;

INVENTORS
Hyun Lee, Ladera Ranch, CA;
Chi-She Chen, Walnut, CA;
Jeffrey C. Solomon, Irvine, CA;
Scott H. Milton, Irvine, CA;
Jayesh Bhakta, Cerritos, CA;

**** CONTINUING DATA ****************************
This application is a CON of 14/489,269 09/17/2014 PAT 9158684
which is a CON of 13/559,476 07/26/2012 PAT 8874831
which claims benefit of 61/512,871 07/28/2011
and is a CIP of 12/240,916 09/29/2008 PAT 8301833
which is a CON of 12/131,873 06/02/2008 ABN
which claims benefit of 60/941,586 06/01/2007

**** FOREIGN APPLICATIONS ****************************

**** IF REQUIRED, FOREIGN FILING LICENSE GRANTED ****
09/14/2015

Foreign Priority claimed	☐ Yes ☑ No		STATE OR COUNTRY	SHEETS DRAWINGS	TOTAL CLAIMS	INDEPENDENT CLAIMS
35 USC 119(a-d) conditions met	☐ Yes ☑ No	☐ Met after Allowance	CA	10	~~1~~ 21	~~1~~ 6
Verified and Acknowledged	/STEPHEN C ELMORE/ Examiner's Signature	Initials			/SCE/	/SCE/

ADDRESS
NIXON PEABODY, LLP
799 Ninth Street, NW
SUITE 500
WASHINGTON, DC 20001
UNITED STATES

TITLE
FLASH-DRAM HYBRID MEMORY MODULE

FILING FEE RECEIVED		
3080	FEES: Authority has been given in Paper No._____ to charge/credit DEPOSIT ACCOUNT No._____ for following:	☐ All Fees ☐ 1.16 Fees (Filing) ☐ 1.17 Fees (Processing Ext. of time) ☐ 1.18 Fees (Issue) ☐ Other _____ ☐ Credit

BIB (Rev. 05/07).

Issue Classification	Application/Control No.	Applicant(s)/Patent Under Reexamination
	14840865	LEE ET AL.
	Examiner	**Art Unit**
	STEPHEN ELMORE	2133

CPC						
Symbol					**Type**	**Version**
G06F		13	/	28	F	2013-01-01
G06F		12	/	0246	I	2013-01-01
G06F		1	/	185	I	2013-01-01
G06F		2212	/	205	A	2013-01-01
G06F		13	/	1694	I	2013-01-01
G06F		12	/	0638	I	2013-01-01
G06F		13	/	4243	I	2013-01-01
G06F		2212	/	7208	A	2013-01-01
G11C		7	/	1072	I	2013-01-01
G11C		14	/	0018	I	2013-01-01
G06F		3	/	0613	I	2013-01-01
G06F		3	/	0659	I	2013-01-01
G06F		3	/	0685	I	2013-01-01
G06F		13	/	4027	I	2013-01-01
			/			

CPC Combination Sets							
Symbol				**Type**	**Set**	**Ranking**	**Version**
			/				
			/				

NONE (Assistant Examiner)	(Date)	**Total Claims Allowed:** 21	
/STEPHEN ELMORE/ Primary Examiner.Art Unit 2133 (Primary Examiner)	11/13/2017 (Date)	O.G. Print Claim(s) 1	O.G. Print Figure 6

U.S. Patent and Trademark Office

Part of Paper No. 20171113

Issue Classification	Application/Control No.	Applicant(s)/Patent Under Reexamination
	14840865	LEE ET AL.
	Examiner	**Art Unit**
	STEPHEN ELMORE	2133

US ORIGINAL CLASSIFICATION		INTERNATIONAL CLASSIFICATION									
CLASS	SUBCLASS	CLAIMED					NON-CLAIMED				
711	103	G	0	6	F	13 / 00 (2006.01.01)					

CROSS REFERENCE(S)					
CLASS	SUBCLASS (ONE SUBCLASS PER BLOCK)				
711	111	112	114	154	156
365	185.33				

NONE (Assistant Examiner)	(Date)	Total Claims Allowed: 21	
/STEPHEN ELMORE/ Primary Examiner.Art Unit 2133 (Primary Examiner)	11/13/2017 (Date)	O.G. Print Claim(s) 1	O.G. Print Figure 6

U.S. Patent and Trademark Office

Part of Paper No. 20171113

Issue Classification	Application/Control No.	Applicant(s)/Patent Under Reexamination
	14840865	LEE ET AL.
	Examiner	**Art Unit**
	STEPHEN ELMORE	2133

☒ **Claims renumbered in the same order as presented by applicant** ☐ **CPA** ☐ **T.D.** ☐ **R.1.47**

Final	Original	Final	Original	Final	Original	Final	Original	Final	Original	Final	Original	Final	Original	Final	Original
	2		18												
	3		19												
	4		20												
	5		21												
	6		22												
	7														
	8														
	9														
	10														
	11														
	12														
	13														
	14														
	15														
	16														
	17														

NONE (Assistant Examiner)	(Date)	**Total Claims Allowed:** 21	
/STEPHEN ELMORE/ Primary Examiner.Art Unit 2133 (Primary Examiner)	11/13/2017 (Date)	O.G. Print Claim(s) 1	O.G. Print Figure 6

U.S. Patent and Trademark Office

Part of Paper No. 20171113

EAST Search History

EAST Search History (Prior Art)

Ref #	Hits	Search Query	DBs	Default Operator	Plurals	Time Stamp
L1	11612	711/103.ccls.	US-PGPUB; USPAT; USOCR; FPRS; EPO; JPO; IBM_TDB	OR	ON	2017/11/13 07:41
L2	2789	365/185.33.ccls.	US-PGPUB; USPAT; USOCR; FPRS; EPO; JPO; IBM_TDB	OR	ON	2017/11/13 07:41
L3	21421	711/111,112,114,154,156.ccls.	US-PGPUB; USPAT; USOCR; FPRS; EPO; JPO; IBM_TDB	OR	ON	2017/11/13 07:41
L4	33615	L1 or L2 or L3	US-PGPUB; USPAT; USOCR; FPRS; EPO; JPO; IBM_TDB	OR	ON	2017/11/13 07:41
L5	8719	hybrid near3 memory	US-PGPUB; USPAT; USOCR; FPRS; EPO; JPO; IBM_TDB	OR	ON	2017/11/13 07:41
L6	797	data adj manager and controller and memory adj controller	US-PGPUB; USPAT; USOCR; FPRS; EPO; JPO; IBM_TDB	OR	ON	2017/11/13 07:41
L7	24	L5 and L6	US-PGPUB; USPAT; USOCR; FPRS; EPO; JPO; IBM_TDB	OR	ON	2017/11/13 07:41
L8	3	L7 and ((@pd or @ad)<"20120726")	US-PGPUB; USPAT; USOCR; FPRS; EPO; JPO; IBM_TDB	OR	ON	2017/11/13 07:41
L9	2	(US-20070136523-$).did. or (US-8412879-$).did.	US-PGPUB; USPAT	OR	ON	2017/11/13 07:41

L10	209916	(format$3 near3 data) with (transfer or transferred or transferring or move or moved or moving or transmitted or transmission or write or written or writing or store or stored or storing)	US-PGPUB; USPAT; USOCR; FPRS; EPO; JPO; IBM_TDB	OR	ON	2017/11/13 07:41
L11	121	L6 and L10	US-PGPUB; USPAT; USOCR; FPRS; EPO; JPO; IBM_TDB	OR	ON	2017/11/13 07:41
L12	8	L5 and L11	US-PGPUB; USPAT; USOCR; FPRS; EPO; JPO; IBM_TDB	OR	ON	2017/11/13 07:41
L13	6	L4 and L11	US-PGPUB; USPAT; USOCR; FPRS; EPO; JPO; IBM_TDB	OR	ON	2017/11/13 07:41
L14	404	(bi-direction or bi-directional) near3 fabric	US-PGPUB; USPAT; USOCR; FPRS; EPO; JPO; IBM_TDB	OR	ON	2017/11/13 07:41
L15	5	L14 with (data adj manager)	US-PGPUB; USPAT; USOCR; FPRS; EPO; JPO; IBM_TDB	OR	ON	2017/11/13 07:41
L16	30	(data near3 (port or input-output or I/O or IO)) and L11	US-PGPUB; USPAT; USOCR; FPRS; EPO; JPO; IBM_TDB	OR	ON	2017/11/13 07:41
L17	5	L5 and L16	US-PGPUB; USPAT; USOCR; FPRS; EPO; JPO; IBM_TDB	OR	ON	2017/11/13 07:41
L18	15	L16 and ((@pd or @ad)<"20120726")	US-PGPUB; USPAT; USOCR; FPRS; EPO; JPO; IBM_TDB	OR	ON	2017/11/13 07:41
L19	0	L4 and L18	US-PGPUB; USPAT; USOCR; FPRS; EPO; JPO; IBM_TDB	OR	ON	2017/11/13 07:41

L20	15	L6 and L18	US-PGPUB; USPAT; USOCR; FPRS; EPO; JPO; IBM_TDB	OR	ON	2017/11/13 07:41
L21	0	L14 and L20	US-PGPUB; USPAT; USOCR; FPRS; EPO; JPO; IBM_TDB	OR	ON	2017/11/13 07:41
L22	0	L5 and L20	US-PGPUB; USPAT; USOCR; FPRS; EPO; JPO; IBM_TDB	OR	ON	2017/11/13 07:41
L23	40297	(control adj information or control adj data or control adj meta-data or control adj metadata) near3 controller	US-PGPUB; USPAT; USOCR; FPRS; EPO; JPO; IBM_TDB	OR	ON	2017/11/13 07:41
L24	5	((control adj information or control adj data or control adj meta-data or control adj metadata) near3 controller) and L16	US-PGPUB; USPAT; USOCR; FPRS; EPO; JPO; IBM_TDB	OR	ON	2017/11/13 07:41
L25	3	L6 and L23 and L10 and L4	US-PGPUB; USPAT; USOCR; FPRS; EPO; JPO; IBM_TDB	OR	ON	2017/11/13 07:41
L26	5	L6 and L23 and L10	US-PGPUB; USPAT; USOCR; FPRS; EPO; JPO; IBM_TDB	OR	ON	2017/11/13 07:41
L27	13	L6 and L23	US-PGPUB; USPAT; USOCR; FPRS; EPO; JPO; IBM_TDB	OR	ON	2017/11/13 07:41
L28	8387	((Hyun) near2 (Lee)).INV.	US-PGPUB; USPAT; USOCR	OR	ON	2017/11/13 07:41
L29	26	((Chi-She) near2 (Chen)).INV.	US-PGPUB; USPAT; USOCR	OR	ON	2017/11/13 07:41
L30	114	((Jeffrey) near2 (Solomon)).INV.	US-PGPUB; USPAT; USOCR	OR	ON	2017/11/13 07:41
L31	183	((Scott) near2 (Milton)).INV.	US-PGPUB; USPAT; USOCR	OR	ON	2017/11/13 07:41

L32	104	((Jayesh) near2 (Bhakta)).INV.	US-PGPUB; USPAT; USOCR	OR	ON	2017/11/13 07:41
L33	5	(data adj manager same controller same memory adj controller) and L5 and (L10 or L14)	US-PGPUB; USPAT; USOCR; FPRS; EPO; JPO; IBM_TDB	OR	ON	2017/11/13 07:41
L34	906	(hybrid near3 memory).ti.	US-PGPUB; USPAT; USOCR; FPRS; EPO; JPO; IBM_TDB	OR	ON	2017/11/13 07:41
L35	11	L6 and L34	US-PGPUB; USPAT; USOCR; FPRS; EPO; JPO; IBM_TDB	OR	ON	2017/11/13 07:41
L36	0	L35 and ((@pd or @ad)<"20120726")	US-PGPUB; USPAT; USOCR; FPRS; EPO; JPO; IBM_TDB	OR	ON	2017/11/13 07:41
L37	11	(data adj manager and memory adj controller) and L34	US-PGPUB; USPAT; USOCR; FPRS; EPO; JPO; IBM_TDB	OR	ON	2017/11/13 07:41
L38	0	L37 and ((@pd or @ad)<"20120726")	US-PGPUB; USPAT; USOCR; FPRS; EPO; JPO; IBM_TDB	OR	ON	2017/11/13 07:41
L39	2	(data adj manager) and L34 and ((@pd or @ad)<"20120726")	US-PGPUB; USPAT; USOCR; FPRS; EPO; JPO; IBM_TDB	OR	ON	2017/11/13 07:41
L40	38	("20080195806" | "6658507" | "5675725" | "20040190210" | "6336176" | "7409590" | "20100274953" | "6336174" | "5519663" | "6487623" | "20080104344" | "4420821" | "6799244" | "20020083368" | "4449205" | "8301833" | "7111142" | "20070192627" | "6158015" | "20120204079").PN.	US-PGPUB; USPAT; USOCR; FPRS; EPO; JPO; IBM_TDB	OR	ON	2017/11/13 07:41
L41	1	L6 and L40	US-PGPUB; USPAT; USOCR; FPRS; EPO; JPO; IBM_TDB	OR	ON	2017/11/13 07:41

L42	117	("2043099" | "20030158995" | "20040163027" | "20050044302" | "20050060488" | "20050132250" | "20050141273" | "20060039197" | "20060069896" | "20060080515" | "20060294295" | "20090031099" | "3562555" | "3916390" | "4234920" | "4965828" | "5430742" | "5519831" | "5563839" | "5870350" | "5874995" | "5890192" | "5953215" | "6023421" | "6112310" | "6145068" | "6199142" | "6216247" | "6421279" | "6459647" | "6487102" | "6769081" | "6799241" | "6944042" | "6948029" | "6952368" | "7053470" | "7062618" | "7089412" | "7102391" | "7155627" | "7200021" | "7234099" | "7409491" | "7411859" | "7421552" | "7467251" | "7600142" | "7716411" | "7818488" | "8233303").PN.	US-PGPUB; USPAT; USOCR; FPRS; EPO; JPO; IBM_TDB	OR	ON	2017/11/13 07:41
L43	0	L14 and L42	US-PGPUB; USPAT; USOCR; FPRS; EPO; JPO; IBM_TDB	OR	ON	2017/11/13 07:41
L44	0	L16 and L42	US-PGPUB; USPAT; USOCR; FPRS; EPO; JPO; IBM_TDB	OR	ON	2017/11/13 07:41
L45	0	L6 and L42	US-PGPUB; USPAT; USOCR; FPRS; EPO; JPO; IBM_TDB	OR	ON	2017/11/13 07:41
L46	1	"8874831".pn.	US-PGPUB; USPAT; USOCR; FPRS; EPO; JPO; IBM_TDB	OR	ON	2017/11/13 07:41
L47	8	"8301833".pn.	US-PGPUB; USPAT; USOCR; FPRS; EPO; JPO; IBM_TDB	OR	ON	2017/11/13 07:41
L48	1	(US-8301833-$).did.	USPAT	OR	ON	2017/11/13 07:41
L49	3	L7 and ((@pd or @ad)<"20110728")	US-PGPUB; USPAT; USOCR; FPRS; EPO; JPO; IBM_TDB	OR	ON	2017/11/13 07:41
L50	1	"8874831".pn.	US-PGPUB; USPAT; USOCR;	OR	ON	2017/11/13 07:41

			FPRS; EPO; JPO; IBM_TDB			
L51	82	("20020083368" | "20030158995" | "20040163027" | "20040190210" | "20050044302" | "20050060488" | "20050132250" | "20050141273" | "20060039197" | "20060069896" | "20060080515" | "20060294295" | "20070136523" | "20070192627" | "20080104344" | "20080195806" | "20090031099" | "20100274953" | "20110320804" | "20120204079" | "20140059170" | "2043099" | "3562555" | "3916390" | "4234920" | "4420821" | "4449205" | "4965828" | "5430742" | "5519663" | "5519831" | "5563839" | "5577213" | "5619644" | "5675725" | "5870350" | "5874995" | "5890192" | "5953215" | "6023421" | "6112310" | "6145068" | "6158015" | "6199142" | "6216247" | "6269382" | "6336174" | "6336176" | "6421279" | "6459647" | "6487102" | "6487623" | "6658507" | "6691209" | "6769081" | "6799241" | "6799244" | "6944042" | "6948029" | "6952368" | "7053470" | "7062618" | "7089412" | "7102391" | "7111142" | "7155627" | "7200021" | "7234099" | "7409491" | "7409590" | "7411859" | "7421552" | "7467251" | "7600142" | "7716411" | "7818488" | "8086955" | "8102614" | "8233303" | "8301833" | "8412879").PN.	US-PGPUB; USPAT; USOCR	OR	ON	2017/11/13 07:41
L52	8	"8301833".pn.	US-PGPUB; USPAT; USOCR; FPRS; EPO; JPO; IBM_TDB	OR	ON	2017/11/13 07:41
L53	1	(US-8301833-$).did.	USPAT	OR	ON	2017/11/13 07:41
L54	1	(US-8102614-$).did.	USPAT	OR	ON	2017/11/13 07:41
L55	221	(format$3 near3 data) with (transfer or transferred or transferring or move or moved or moving or transmitted or transmission or write or written or writing or store or stored or storing) same (data adj manager)	US-PGPUB; USPAT; USOCR; FPRS; EPO; JPO; IBM_TDB	OR	ON	2017/11/13 07:41
L56	4	((first adj3 signals) and (second adj3 signals) and (third adj3 signals)) and L55	US-PGPUB; USPAT; USOCR; FPRS; EPO; JPO; IBM_TDB	OR	ON	2017/11/13 07:41
L57	12	((first adj3 signals) and (second adj3 signals) and (third adj3 signals)) and L34	US-PGPUB; USPAT; USOCR; FPRS; EPO; JPO; IBM_TDB	OR	ON	2017/11/13 07:41

L58	8	L57 and ((@pd or @ad)<"20110728")	US-PGPUB; USPAT; USOCR; FPRS; EPO; JPO; IBM_TDB	OR	ON	2017/11/13 07:41
L59	0	L37 and ((@pd or @ad)<"20110728")	US-PGPUB; USPAT; USOCR; FPRS; EPO; JPO; IBM_TDB	OR	ON	2017/11/13 07:41
L60	1672	G06F12/0638.CPC.	US-PGPUB; USPAT; USOCR; FPRS; EPO; JPO; IBM_TDB	OR	ON	2017/11/13 07:41
L61	19610	G06F12/0246.CPC.	US-PGPUB; USPAT; USOCR; FPRS; EPO; JPO; IBM_TDB	OR	ON	2017/11/13 07:41
L62	3460	G06F13/4243.CPC.	US-PGPUB; USPAT; USOCR; FPRS; EPO; JPO; IBM_TDB	OR	ON	2017/11/13 07:41
L63	8401	G11C7/1072.CPC.	US-PGPUB; USPAT; USOCR; FPRS; EPO; JPO; IBM_TDB	OR	ON	2017/11/13 07:41
L64	704	G11C14/0018.CPC.	US-PGPUB; USPAT; USOCR; FPRS; EPO; JPO; IBM_TDB	OR	ON	2017/11/13 07:41
L65	32575	L60 or L61 or L62 or L63 or L64	US-PGPUB; USPAT; USOCR; FPRS; EPO; JPO; IBM_TDB	OR	ON	2017/11/13 07:41
L66	5	L55 and L65	US-PGPUB; USPAT; USOCR; FPRS; EPO; JPO; IBM_TDB	OR	ON	2017/11/13 07:41
L67	0	L66 and ((@pd or @ad)<"20110728")	US-PGPUB; USPAT; USOCR; FPRS; EPO; JPO; IBM_TDB	OR	ON	2017/11/13 07:41

L68	12	L5 and L57	US-PGPUB; USPAT; USOCR; FPRS; EPO; JPO; IBM_TDB	OR	ON	2017/11/13 07:41
L69	3	L6 and L68	US-PGPUB; USPAT; USOCR; FPRS; EPO; JPO; IBM_TDB	OR	ON	2017/11/13 07:41
L70	3	(data adj manager) and L68	US-PGPUB; USPAT; USOCR; FPRS; EPO; JPO; IBM_TDB	OR	ON	2017/11/13 07:41
L71	3	L57 and L65	US-PGPUB; USPAT; USOCR; FPRS; EPO; JPO; IBM_TDB	OR	ON	2017/11/13 07:41
L72	127	(data adj manager) and L65	US-PGPUB; USPAT; USOCR; FPRS; EPO; JPO; IBM_TDB	OR	ON	2017/11/13 07:41
L73	3	((first adj3 signals) and (second adj3 signals) and (third adj3 signals)) and L72	US-PGPUB; USPAT; USOCR; FPRS; EPO; JPO; IBM_TDB	OR	ON	2017/11/13 07:41
L74	10	("9158684" or "8874831" or "8301833").PN.	US-PGPUB; USPAT; USOCR; FPRS; EPO; JPO; IBM_TDB	OR	ON	2017/11/13 07:41
L75	215	("20020083368" | "20020199061" | "20030158995" | "20040088508" | "20040163027" | "20040190210" | "20050044302" | "20050060488" | "20050132250" | "20050141273" | "20060039197" | "20060069896" | "20060080515" | "20060294295" | "20070136523" | "20070192627" | "20080104344" | "20080195806" | "20090031099" | "20100274953" | "20110320804" | "20120204079" | "20120271990" | "20130019076" | "20130086309" | "20130254456" | "20130254497" | "20140059170" | "20140156919" | "20140156920" | "2043099" | "3562555" | "3916390" | "4234920" | "4420821" | "4449205" | "4965828" | "5430742" | "5519663" | "5519831" | "5563839" | "5577213" | "5619644" | "5675725" | "5870350" |	US-PGPUB; USPAT; USOCR; FPRS; EPO; JPO; IBM_TDB	OR	ON	2017/11/13 07:41

		"5874995" | "5890192" | "5953215" | "6023421" | "6112310" | "6145068" | "6158015" | "6199142" | "6216247" | "6269382" | "6336174" | "6336176" | "6421279" | "6459647" | "6487102" | "6487623" | "6658507" | "6691209" | "6721860" | "6769081" | "6799241" | "6799244" | "6816982" | "6944042" | "6948029" | "6952368" | "7053470" | "7062618" | "7089412" | "7102391" | "7111142" | "7155627" | "7200021" | "7234099" | "7353325" | "7409491" | "7409590" | "7411859" | "7421552" | "7467251" | "7600142" | "7716411" | "7818488" | "8086955" | "8102614" | "8233303" | "8301833" | "8407395" | "8412879" | "8516187" | "8671243" | "8677060" | "8874831" | "8880791" | "8904098" | "8904099").PN.				
L76	3	L72 and L75	US-PGPUB; USPAT; USOCR; FPRS; EPO; JPO; IBM_TDB	OR	ON	2017/11/13 07:41
L77	11382	G06F13/28.CPC.	US-PGPUB; USPAT; USOCR; FPRS; EPO; JPO; IBM_TDB	OR	ON	2017/11/13 07:41
L78	3187	G06F1/185.CPC.	US-PGPUB; USPAT; USOCR; FPRS; EPO; JPO; IBM_TDB	OR	ON	2017/11/13 07:41
L79	7554	G06F3/0613.CPC.	US-PGPUB; USPAT; USOCR; FPRS; EPO; JPO; IBM_TDB	OR	ON	2017/11/13 07:41
L80	12366	G06F3/0659.CPC.	US-PGPUB; USPAT; USOCR; FPRS; EPO; JPO; IBM_TDB	OR	ON	2017/11/13 07:41
L81	5394	G06F3/0685.CPC.	US-PGPUB; USPAT; USOCR; FPRS; EPO; JPO; IBM_TDB	OR	ON	2017/11/13 07:41
L82	2476	G06F13/1694.CPC.	US-PGPUB; USPAT; USOCR; FPRS; EPO; JPO; IBM_TDB	OR	ON	2017/11/13 07:41

L83	4661	G06F13/4027.CPC.	US-PGPUB; USPAT; USOCR; FPRS; EPO; JPO; IBM_TDB	OR	ON	2017/11/13 07:41
L84	42031	L77 or L78 or L79 or L80 or L81 or L82 or L83	US-PGPUB; USPAT; USOCR; FPRS; EPO; JPO; IBM_TDB	OR	ON	2017/11/13 07:41
L85	251	(data adj manager) and L84	US-PGPUB; USPAT; USOCR; FPRS; EPO; JPO; IBM_TDB	OR	ON	2017/11/13 07:41
L86	36	L6 and L85	US-PGPUB; USPAT; USOCR; FPRS; EPO; JPO; IBM_TDB	OR	ON	2017/11/13 07:41
L87	7	((control adj information or control adj data or control adj signal or control adj metadata) near3 controller) and L86	US-PGPUB; USPAT; USOCR; FPRS; EPO; JPO; IBM_TDB	OR	ON	2017/11/13 07:41
L88	2	L87 and ((@pd or @ad)<"20110728")	US-PGPUB; USPAT; USOCR; FPRS; EPO; JPO; IBM_TDB	OR	ON	2017/11/13 07:41
L89	0	((read$3 near3 command) with (memory adj controller)) and L88	US-PGPUB; USPAT; USOCR; FPRS; EPO; JPO; IBM_TDB	OR	ON	2017/11/13 07:41
L90	5	((read$3 near3 command) with (memory adj controller)) and L87	US-PGPUB; USPAT; USOCR; FPRS; EPO; JPO; IBM_TDB	OR	ON	2017/11/13 07:41
L91	0	L90 and ((@pd or @ad)<"20110728")	US-PGPUB; USPAT; USOCR; FPRS; EPO; JPO; IBM_TDB	OR	ON	2017/11/13 07:41
L92	0	((first adj command) with (second adj command) with (memory adj controller)) and L88	US-PGPUB; USPAT; USOCR; FPRS; EPO; JPO; IBM_TDB	OR	ON	2017/11/13 07:41

L93	4	("20100110748" | "20110161569" | "9158684").PN.	US-PGPUB; USPAT; USOCR; FPRS; EPO; JPO; IBM_TDB	OR	ON	2017/11/13 07:41
L94	3	(US-20110161569-$ or US-20100110748-$).did. or (US-9158684-$).did.	US-PGPUB; USPAT	OR	ON	2017/11/13 07:41
L95	2	((read$3 near3 command) with (memory adj controller)) and L94	US-PGPUB; USPAT; USOCR; FPRS; EPO; JPO; IBM_TDB	OR	ON	2017/11/13 07:41
L96	1	L95 and ((@pd or @ad)<"20110728")	US-PGPUB; USPAT; USOCR; FPRS; EPO; JPO; IBM_TDB	OR	ON	2017/11/13 07:41
L97	0	L96 and (data adj manager)	US-PGPUB; USPAT; USOCR; FPRS; EPO; JPO; IBM_TDB	OR	ON	2017/11/13 07:41
L98	1	L94 and (data adj manager)	US-PGPUB; USPAT; USOCR; FPRS; EPO; JPO; IBM_TDB	OR	ON	2017/11/13 07:41
L99	0	L98 and ((@pd or @ad)<"20110728")	US-PGPUB; USPAT; USOCR; FPRS; EPO; JPO; IBM_TDB	OR	ON	2017/11/13 07:41
L100	0	("Netlist, Inc.").AANM.	US-PGPUB; USPAT; USOCR	OR	ON	2017/11/13 07:41
L101	47	("Netlist").AANM.	US-PGPUB; USPAT; USOCR	OR	ON	2017/11/13 07:41
L102	671	((control adj information or control adj data or control adj signal or control adj metadata) near3 controller) and L77	US-PGPUB; USPAT; USOCR; FPRS; EPO; JPO; IBM_TDB	OR	ON	2017/11/13 07:41
L103	5	(data adj manager) and L102	US-PGPUB; USPAT; USOCR; FPRS; EPO; JPO; IBM_TDB	OR	ON	2017/11/13 07:41
L104	0	L103 and ((@pd or @ad)<"20110728")	US-PGPUB; USPAT; USOCR;	OR	ON	2017/11/13 07:41

			FPRS; EPO; JPO; IBM_TDB			
L105	33	((read$3 near3 command) with (memory adj controller)) and L102	US-PGPUB; USPAT; USOCR; FPRS; EPO; JPO; IBM_TDB	OR	ON	2017/11/13 07:41
L106	5	(data adj manager) and L105	US-PGPUB; USPAT; USOCR; FPRS; EPO; JPO; IBM_TDB	OR	ON	2017/11/13 07:41
L107	0	L106 and ((@pd or @ad)<"20110728")	US-PGPUB; USPAT; USOCR; FPRS; EPO; JPO; IBM_TDB	OR	ON	2017/11/13 07:41
L108	30	("20020053944" | "20030028733" | "20050249011" | "20050273548" | "20060212651" | "20070070669" | "20070147115" | "20070255898" | "20070288683" | "20080147968" | "20080235443" | "20080291727" | "20100322020" | "20110078496" | "20120317433" | "20140032820" | "20150058701" | "4882709" | "5490155" | "5799200" | "6026465" | "6065092" | "6571244" | "6614685" | "6693840" | "6810513" | "7136978" | "7519754" | "9043677" | "9361250").PN.	US-PGPUB; USPAT	OR	ON	2017/11/13 07:41
L109	1	("20100110748").PN.	US-PGPUB; USPAT	OR	ON	2017/11/13 07:41
L110	1	L109 and ((@pd or @ad)<"20110728")	US-PGPUB; USPAT; USOCR; FPRS; EPO; JPO; IBM_TDB	OR	ON	2017/11/13 07:41
L111	1	L109 and protocol and bus	US-PGPUB; USPAT; USOCR; FPRS; EPO; JPO; IBM_TDB	OR	ON	2017/11/13 07:41
L112	13	L108 and protocol and bus	US-PGPUB; USPAT; USOCR; FPRS; EPO; JPO; IBM_TDB	OR	ON	2017/11/13 07:41
L113	0	(data adj manager) and L112	US-PGPUB; USPAT; USOCR; FPRS; EPO; JPO; IBM_TDB	OR	ON	2017/11/13 07:41

L114	11	(data near5 transfer$3) and L112	US-PGPUB; USPAT; USOCR; FPRS; EPO; JPO; IBM_TDB	OR	ON	2017/11/13 07:41
L115	1	(data near5 transfer$3) and L109	US-PGPUB; USPAT; USOCR; FPRS; EPO; JPO; IBM_TDB	OR	ON	2017/11/13 07:41
L116	1	(data near5 width) and L109	US-PGPUB; USPAT; USOCR; FPRS; EPO; JPO; IBM_TDB	OR	ON	2017/11/13 07:41
L149	5	("20120117402" | "20120265952" | "5813029" | "5991885" | "9436600").PN.	US-PGPUB; USPAT	OR	ON	2017/11/13 07:47
L150	7260	(first adj2 bus) and (second adj2 bus) and (third adj2 bus)	US-PGPUB; USPAT; USOCR; FPRS; EPO; JPO; DERWENT; IBM_TDB	OR	ON	2017/11/13 08:02
L151	29195	(first adj2 protocol) and (second adj2 protocol)	US-PGPUB; USPAT; USOCR; FPRS; EPO; JPO; DERWENT; IBM_TDB	OR	ON	2017/11/13 08:03
L152	126	150 and 151	US-PGPUB; USPAT; USOCR; FPRS; EPO; JPO; DERWENT; IBM_TDB	OR	ON	2017/11/13 08:03
L153	23	((first adj2 bus) with (first adj2 protocol)) and ((third adj2 bus) with (second adj2 protocol))	US-PGPUB; USPAT; USOCR; FPRS; EPO; JPO; DERWENT; IBM_TDB	OR	ON	2017/11/13 08:05
L154	23	152 and 153	US-PGPUB; USPAT; USOCR; FPRS; EPO; JPO; DERWENT; IBM_TDB	OR	ON	2017/11/13 08:05
L155	0	149 and 154	US-PGPUB; USPAT; USOCR; FPRS; EPO; JPO;	OR	ON	2017/11/13 08:05

			DERWENT; IBM_TDB			
L156	8	154 and ((@pd or @ad)<"20110728")	US-PGPUB; USPAT; USOCR; FPRS; EPO; JPO; IBM_TDB	OR	ON	2017/11/13 08:05
L157	5	(US-7895388-$ or US-7801162-$ or US-7073008-$ or US-6574330-$ or US-6085269-$).did.	USPAT	OR	ON	2017/11/13 08:07
L158	0	6 and 157	US-PGPUB; USPAT; USOCR; FPRS; EPO; JPO; DERWENT; IBM_TDB	OR	ON	2017/11/13 08:08
L159	2	host and (memory adj controller) and 157	US-PGPUB; USPAT; USOCR; FPRS; EPO; JPO; DERWENT; IBM_TDB	OR	ON	2017/11/13 08:09
L160	16831	(non-volatile adj memory or NVM) with ((non-volatile adj memory or NVM) near3 controller)	US-PGPUB; USPAT; USOCR; FPRS; EPO; JPO; DERWENT; IBM_TDB	OR	ON	2017/11/13 08:12
L161	17824	(volatile adj memory or VM) with ((volatile adj memory or VM) near3 controller)	US-PGPUB; USPAT; USOCR; FPRS; EPO; JPO; DERWENT; IBM_TDB	OR	ON	2017/11/13 08:12
L162	13317	160 and 161	US-PGPUB; USPAT; USOCR; FPRS; EPO; JPO; DERWENT; IBM_TDB	OR	ON	2017/11/13 08:13
L163	36	host and (memory adj controller) and (data adj manager) and 162	US-PGPUB; USPAT; USOCR; FPRS; EPO; JPO; DERWENT; IBM_TDB	OR	ON	2017/11/13 08:13
L164	1940	(volatile adj memory or VM) with ((volatile adj memory or VM) near3 controller) with (command or instruction)	US-PGPUB; USPAT; USOCR; FPRS; EPO; JPO; DERWENT; IBM_TDB	OR	ON	2017/11/13 08:14

L165	8	163 and 164	US-PGPUB; USPAT; USOCR; FPRS; EPO; JPO; DERWENT; IBM_TDB	OR	ON	2017/11/13 08:14
L166	3	165 and ((@pd or @ad)<"20110728")	US-PGPUB; USPAT; USOCR; FPRS; EPO; JPO; IBM_TDB	OR	ON	2017/11/13 08:15

EAST Search History (Interference)

Ref #	Hits	Search Query	DBs	Default Operator	Plurals	Time Stamp
L117	26	((Chi-She) near2 (Chen)).INV.	US-PGPUB; USPAT	OR	ON	2017/11/13 07:41
L118	114	((Jeffrey) near2 (Solomon)).INV.	US-PGPUB; USPAT	OR	ON	2017/11/13 07:41
L119	139	((Scott) near2 (Milton)).INV.	US-PGPUB; USPAT	OR	ON	2017/11/13 07:41
L120	104	((Jayesh) near2 (Bhakta)).INV.	US-PGPUB; USPAT	OR	ON	2017/11/13 07:41
L121	8387	((Hyun) near2 (Lee)).INV.	US-PGPUB; USPAT	OR	ON	2017/11/13 07:41
L122	8643	L117 or L118 or L119 or L120 or L121	US-PGPUB; USPAT	OR	ON	2017/11/13 07:41
L123	12	(data adj manager with controller with memory adj controller).clm.	US-PGPUB; USPAT	OR	ON	2017/11/13 07:41
L124	5	L122 and L123	US-PGPUB; USPAT	OR	ON	2017/11/13 07:41
L125	14433	(data adj path or memory adj segment).clm.	US-PGPUB; USPAT	OR	ON	2017/11/13 07:41
L126	60	L122 and L125	US-PGPUB; USPAT	OR	ON	2017/11/13 07:41
L127	4	L123 and L126	US-PGPUB; USPAT	OR	ON	2017/11/13 07:41
L128	11569	711/103.ccls.	US-PGPUB; USPAT	OR	ON	2017/11/13 07:41
L129	1752	(data adj manager).clm.	US-PGPUB; USPAT	OR	ON	2017/11/13 07:41
L130	802	G06F12/0638.CPC.	US-	OR	ON	2017/11/13

			PGPUB; USPAT			07:41
L131	21	L122 and L128	US-PGPUB; USPAT	OR	ON	2017/11/13 07:41
L132	3	L129 and L131	US-PGPUB; USPAT	OR	ON	2017/11/13 07:41
L133	4694	G06F13/28.CPC.	US-PGPUB; USPAT	OR	ON	2017/11/13 07:41
L134	12	L122 and L133	US-PGPUB; USPAT	OR	ON	2017/11/13 07:41
L135	5	L123 and L134	US-PGPUB; USPAT	OR	ON	2017/11/13 07:41
L136	1307	((read$3 near3 command) with (memory adj controller)).clm.	US-PGPUB; USPAT	OR	ON	2017/11/13 07:41
L137	0	L135 and L136	US-PGPUB; USPAT	OR	ON	2017/11/13 07:41
L138	36516	((control adj information or control adj data or control adj signal or control adj metadata) near3 controller).clm.	US-PGPUB; USPAT	OR	ON	2017/11/13 07:41
L139	4	L134 and L138	US-PGPUB; USPAT	OR	ON	2017/11/13 07:41
L140	4	L123 and L139	US-PGPUB; USPAT	OR	ON	2017/11/13 07:41
L141	0	L140 and ((@pd or @ad)<"20110728")	US-PGPUB; USPAT	OR	ON	2017/11/13 07:41
L142	47	("Netlist").AANM.	US-PGPUB; USPAT	OR	ON	2017/11/13 07:41
L143	47	L122 and L142	US-PGPUB; USPAT	OR	ON	2017/11/13 07:41
L144	3	L129 and L143	US-PGPUB; USPAT	OR	ON	2017/11/13 07:41
L145	0	L136 and L144	US-PGPUB; USPAT	OR	ON	2017/11/13 07:41
L146	2	L138 and L144	US-PGPUB; USPAT	OR	ON	2017/11/13 07:41
L147	4	L123 and L138	US-PGPUB; USPAT	OR	ON	2017/11/13 07:41
L148	2	L123 and L146	US-PGPUB; USPAT	OR	ON	2017/11/13 07:41

11/ 13/ 2017 8:16:41 AM
C:\ Users\ selmore\ Documents\ EAST\ Workspaces\ 14840865.wsp

Samsung Electronics Co., Ltd.
Ex. 1011, p. 325

Doc Code: PA..
Document Description: Power of Attorney

PTO/AIA/82B (07-13)
Approved for use through 01/31/2018. OMB 0651-0035
U.S. Patent and Trademark Office; U.S. DEPARTMENT OF COMMERCE
Under the Paperwork Reduction Act of 1995, no persons are required to respond to a collection of information unless it displays a valid OMB control number

POWER OF ATTORNEY BY APPLICANT

I hereby revoke all previous powers of attorney given in the application identified in either the attached transmittal letter or the boxes below.

Application Number	Filing Date

(Note: The boxes above may be left blank if information is provided on form PTO/AIA/82A.)

☑ I hereby appoint the Patent Practitioner(s) associated with the following Customer Number as my/our attorney(s) or agent(s), and to transact all business in the United States Patent and Trademark Office connected therewith for the application referenced in the attached transmittal letter (form PTO/AIA/82A) or identified above: 151145

OR

☐ I hereby appoint Practitioner(s) named in the attached list (form PTO/AIA/82C) as my/our attorney(s) or agent(s), and to transact all business in the United States Patent and Trademark Office connected therewith for the patent application referenced in the attached transmittal letter (form PTO/AIA/82A) or identified above. (Note: Complete form PTO/AIA/82C.)

Please recognize or change the correspondence address for the application identified in the attached transmittal letter or the boxes above to:

☑ The address associated with the above-mentioned Customer Number

OR

☐ The address associated with Customer Number:

OR

☐ Firm or Individual Name					
Address					
City		State		Zip	
Country					
Telephone		Email			

I am the Applicant (if the Applicant is a juristic entity, list the Applicant name in the box):

Netlist, Inc.

☐ Inventor or Joint Inventor (title not required below)

☐ Legal Representative of a Deceased or Legally Incapacitated Inventor (title not required below)

☑ Assignee or Person to Whom the Inventor is Under an Obligation to Assign (provide signer's title if applicant is a juristic entity)

☐ Person Who Otherwise Shows Sufficient Proprietary Interest (e.g., a petition under 37 CFR 1.46(b)(2) was granted in the application or is concurrently being filed with this document) (provide signer's title if applicant is a juristic entity)

SIGNATURE of Applicant for Patent

The undersigned (whose title is supplied below) is authorized to act on behalf of the applicant (e.g., where the applicant is a juristic entity).

Signature		Date (Optional)	12/5/17
Name	Noel B. Whitney		
Title	VP, IP & Licensing		

NOTE: Signature - This form must be signed by the applicant in accordance with 37 CFR 1.33. See 37 CFR 1.4 for signature requirements and certifications. If more than one applicant, use multiple forms.

☐ Total of forms are submitted.

This collection of information is required by 37 CFR 1.131, 1.32, and 1.33. The information is required to obtain or retain a benefit by the public which is to file (and by the USPTO to process) an application. Confidentiality is governed by 35 U.S.C. 122 and 37 CFR 1.11 and 1.14. This collection is estimated to take 3 minutes to complete, including gathering, preparing, and submitting the completed application form to the USPTO. Time will vary depending upon the individual case. Any comments on the amount of time you require to complete this form and/or suggestions for reducing this burden, should be sent to the Chief Information Officer, U.S. Patent and Trademark Office, U.S. Department of Commerce, P.O. Box 1450, Alexandria, VA 22313-1450. DO NOT SEND FEES OR COMPLETED FORMS TO THIS ADDRESS. **SEND TO: Commissioner for Patents, P.O. Box 1450, Alexandria, VA 22313-1450.**

If you need assistance in completing the form, call 1-800-PTO-9199 and select option 2.

Doc Code: PA..
Document Description: Power of Attorney

PTO/AIA/82A (07-13)
Approved for use through 01/31/2018. OMB 0651-0035
U.S. Patent and Trademark Office; U.S. DEPARTMENT OF COMMERCE
Under the Paperwork Reduction Act of 1995, no persons are required to respond to a collection of information unless it displays a valid OMB control number.

TRANSMITTAL FOR POWER OF ATTORNEY TO ONE OR MORE REGISTERED PRACTITIONERS

NOTE: This form is to be submitted with the Power of Attorney by Applicant form (PTO/AIA/82B) to identify the application to which the Power of Attorney is directed, in accordance with 37 CFR 1.5, unless the application number and filing date are identified in the Power of Attorney by Applicant form. If neither form PTO/AIA/82A nor form PTO/AIA82B identifies the application to which the Power of Attorney is directed, the Power of Attorney will not be recognized in the application.

Application Number	14/840,865
Filing Date	08-31-2015
First Named Inventor	Hyun Lee
Title	FLASH-DRAM HYBRID MEMORY MODULE
Art Unit	2133
Examiner Name	ELMORE, STEPHEN C
Attorney Docket Number	0016.001000D

SIGNATURE of Applicant or Patent Practitioner

Signature	/Khaled Shami/	Date (Optional)	
Name	Khaled Shami	Registration Number	38,745
Title (if Applicant is a juristic entity)			
Applicant Name (if Applicant is a juristic entity)			

NOTE: This form must be signed in accordance with 37 CFR 1.33. See 37 CFR 1.4(d) for signature requirements and certifications. If more than one applicant, use multiple forms.

☐ *Total of _____ forms are submitted.

This collection of information is required by 37 CFR 1.131, 1.32, and 1.33. The information is required to obtain or retain a benefit by the public which is to file (and by the USPTO to process) an application. Confidentiality is governed by 35 U.S.C. 122 and 37 CFR 1.11 and 1.14. This collection is estimated to take 3 minutes to complete, including gathering, preparing, and submitting the completed application form to the USPTO. Time will vary depending upon the individual case. Any comments on the amount of time you require to complete this form and/or suggestions for reducing this burden, should be sent to the Chief Information Officer, U.S. Patent and Trademark Office, U.S. Department of Commerce, P.O. Box 1450, Alexandria, VA 22313-1450. DO NOT SEND FEES OR COMPLETED FORMS TO THIS ADDRESS. **SEND TO: Commissioner for Patents, P.O. Box 1450, Alexandria, VA 22313-1450.**

If you need assistance in completing the form, call 1-800-PTO-9199 and select option 2.

Electronic Acknowledgement Receipt

EFS ID:	31167900
Application Number:	14840865
International Application Number:	
Confirmation Number:	2445
Title of Invention:	FLASH-DRAM HYBRID MEMORY MODULE
First Named Inventor/Applicant Name:	Hyun Lee
Customer Number:	22204
Filer:	Khaled Shami/Casey Berger
Filer Authorized By:	Khaled Shami
Attorney Docket Number:	062453-036
Receipt Date:	08-DEC-2017
Filing Date:	31-AUG-2015
Time Stamp:	10:15:15
Application Type:	Utility under 35 USC 111(a)

Payment information:

Submitted with Payment	no

File Listing:

Document Number	Document Description	File Name	File Size(Bytes)/ Message Digest	Multi Part /.zip	Pages (if appl.)
1	Power of Attorney	0016001000D_POA.pdf	831888 1845b55fc638335ec9f43b4e2b3005c5cd49d774	no	2

Warnings:

The page size in the PDF is too large. The pages should be 8.5 x 11 or A4. If this PDF is submitted, the pages will be resized upon entry into the Image File Wrapper and may affect subsequent processing	
Information:	
Total Files Size (in bytes):	831888

This Acknowledgement Receipt evidences receipt on the noted date by the USPTO of the indicated documents, characterized by the applicant, and including page counts, where applicable. It serves as evidence of receipt similar to a Post Card, as described in MPEP 503.

New Applications Under 35 U.S.C. 111
If a new application is being filed and the application includes the necessary components for a filing date (see 37 CFR 1.53(b)-(d) and MPEP 506), a Filing Receipt (37 CFR 1.54) will be issued in due course and the date shown on this Acknowledgement Receipt will establish the filing date of the application.
National Stage of an International Application under 35 U.S.C. 371
If a timely submission to enter the national stage of an international application is compliant with the conditions of 35 U.S.C. 371 and other applicable requirements a Form PCT/DO/EO/903 indicating acceptance of the application as a national stage submission under 35 U.S.C. 371 will be issued in addition to the Filing Receipt, in due course.
New International Application Filed with the USPTO as a Receiving Office
If a new international application is being filed and the international application includes the necessary components for an international filing date (see PCT Article 11 and MPEP 1810), a Notification of the International Application Number and of the International Filing Date (Form PCT/RO/105) will be issued in due course, subject to prescriptions concerning national security, and the date shown on this Acknowledgement Receipt will establish the international filing date of the application.

UNITED STATES PATENT AND TRADEMARK OFFICE

UNITED STATES DEPARTMENT OF COMMERCE
United States Patent and Trademark Office
Address: COMMISSIONER FOR PATENTS
P.O. Box 1450
Alexandria, Virginia 22313-1450
www.uspto.gov

APPLICATION NUMBER	FILING OR 371(C) DATE	FIRST NAMED APPLICANT	ATTY. DOCKET NO./TITLE
14/840,865	08/31/2015	Hyun Lee	0016.001000D

CONFIRMATION NO. 2445

POA ACCEPTANCE LETTER

151145
Shami Messinger PLLC
1000 Potomac Street NW
Fifth Floor
Washington, DC 20007

OC000000096025171

Date Mailed: 12/13/2017

NOTICE OF ACCEPTANCE OF POWER OF ATTORNEY

This is in response to the Power of Attorney filed 12/08/2017.

The Power of Attorney in this application is accepted. Correspondence in this application will be mailed to the above address as provided by 37 CFR 1.33.

Questions about the contents of this notice and the requirements it sets forth should be directed to the Office of Data Management, Application Assistance Unit, at **(571) 272-4000** or **(571) 272-4200** or **1-888-786-0101**.

/nhassani/

PART B - FEE(S) TRANSMITTAL

Complete and send this form, together with applicable fee(s), to: Mail **Mail Stop ISSUE FEE**
Commissioner for Patents
P.O. Box 1450
Alexandria, Virginia 22313-1450
or Fax (571)-273-2885

INSTRUCTIONS: This form should be used for transmitting the ISSUE FEE and PUBLICATION FEE (if required). Blocks 1 through 5 should be completed where appropriate. All further correspondence including the Patent, advance orders and notification of maintenance fees will be mailed to the current correspondence address as indicated unless corrected below or directed otherwise in Block 1, by (a) specifying a new correspondence address; and/or (b) indicating a separate "FEE ADDRESS" for maintenance fee notifications.

CURRENT CORRESPONDENCE ADDRESS (Note: Use Block 1 for any change of address)

22204 7590 11/17/2017
NIXON PEABODY, LLP
799 Ninth Street, NW
SUITE 500
WASHINGTON, DC 20001

Note: A certificate of mailing can only be used for domestic mailings of the Fee(s) Transmittal. This certificate cannot be used for any other accompanying papers. Each additional paper, such as an assignment or formal drawing, must have its own certificate of mailing or transmission.

Certificate of Mailing or Transmission

I hereby certify that this Fee(s) Transmittal is being deposited with the United States Postal Service with sufficient postage for first class mail in an envelope addressed to the Mail Stop ISSUE FEE address above, or being facsimile transmitted to the USPTO (571) 273-2885, on the date indicated below.

(Depositor's name)
(Signature)
(Date)

APPLICATION NO.	FILING DATE	FIRST NAMED INVENTOR	ATTORNEY DOCKET NO.	CONFIRMATION NO.
14/840,865	08/31/2015	Hyun Lee	062453-036	2445

TITLE OF INVENTION: FLASH-DRAM HYBRID MEMORY MODULE

APPLN. TYPE	ENTITY STATUS	ISSUE FEE DUE	PUBLICATION FEE DUE	PREV. PAID ISSUE FEE	TOTAL FEE(S) DUE	DATE DUE
nonprovisional	UNDISCOUNTED	$960	$0	$0	$960	02/20/2018

EXAMINER	ART UNIT	CLASS-SUBCLASS
ELMORE, STEPHEN C	2133	711-103000

1. Change of correspondence address or indication of "Fee Address" (37 CFR 1.363).
- ☐ Change of correspondence address (or Change of Correspondence Address form PTO/SB/122) attached.
- ☐ "Fee Address" indication (or "Fee Address" Indication form PTO/SB/47; Rev 03-02 or more recent) attached. **Use of a Customer Number is required.**

2. For printing on the patent front page, list
(1) The names of up to 3 registered patent attorneys or agents OR, alternatively,
(2) The name of a single firm (having as a member a registered attorney or agent) and the names of up to 2 registered patent attorneys or agents. If no name is listed, no name will be printed.

1 Shami Messinger PLLC
2
3

3. ASSIGNEE NAME AND RESIDENCE DATA TO BE PRINTED ON THE PATENT (print or type)

PLEASE NOTE: Unless an assignee is identified below, no assignee data will appear on the patent. If an assignee is identified below, the document has been filed for recordation as set forth in 37 CFR 3.11. Completion of this form is NOT a substitute for filing an assignment.

(A) NAME OF ASSIGNEE: Netlist, Inc.
(B) RESIDENCE: (CITY and STATE OR COUNTRY): Irvine, CA

Please check the appropriate assignee category or categories (will not be printed on the patent) : ☐ Individual ☒ Corporation or other private group entity ☐ Government

4a. The following fee(s) are submitted:
- ☒ Issue Fee
- ☐ Publication Fee (No small entity discount permitted)
- ☐ Advance Order - # of Copies _____

4b. Payment of Fee(s): **(Please first reapply any previously paid issue fee shown above)**
- ☐ A check is enclosed.
- ☒ Payment by credit card. Form PTO-2038 is attached.
- ☐ The director is hereby authorized to charge the required fee(s), any deficiency, or credits any overpayment, to Deposit Account Number _____ (enclose an extra copy of this form).

5. **Change in Entity Status** (from status indicated above)
- ☐ Applicant certifying micro entity status. See 37 CFR 1.29 — NOTE: Absent a valid certification of Micro Entity Status (see forms PTO/SB/15A and 15B), issue fee payment in the micro entity amount will not be accepted at the risk of application abandonment.
- ☐ Applicant asserting small entity status. See 37 CFR 1.27 — NOTE: If the application was previously under micro entity status, checking this box will be taken to be a notification of loss of entitlement to micro entity status.
- ☐ Applicant changing to regular undiscounted fee status. — NOTE: Checking this box will be taken to be a notification of loss of entitlement to small or micro entity status, as applicable.

NOTE: This form must be signed in accordance with 37 CFR 1.31 and 1.33. See 37 CFR 1.4 for signature requirements and certifications.

Authorized Signature Khaled Shami Date February 16, 2018
Typed or printed name Khaled Shami Registration No. 38,745

PTOL-85 Part B (10-13) Approved for use through 10/31/2013. OMB 0651-0033 U.S. Patent and Trademark Office; U.S. DEPARTMENT OF COMMERCE

Samsung Electronics Co., Ltd.
Ex. 1011, p. 331

Electronic Patent Application Fee Transmittal

Application Number:	
Filing Date:	
Title of Invention:	Your fee transmittal sheet cannot be generated at this time. Please complete your submission. After completing your submission, please contact the Electronic Business Center (EBC) to request the fee transmittal sheet for this submission. We apologize for the inconvenience. Electronic Business Center (EBC) 1-866-217-9197 (toll-free) or 571-272-4100 6 a.m. to 12 Midnight Eastern Time Monday -Friday
First Named Inventor/Applicant Name:	
Filer:	
Attorney Docket Number:	

Filing Fees

Description	Fee Code	Quantity	Amount	Sub-Total in USD($)
Basic Filing:				
Pages:				
Claims:				
Miscellaneous-Filing:				
Petition:				
Patent-Appeals-and-Interference:				
Post-Allowance-and-Post-Issuance:				
Extension-of-Time:				

Description	Fee Code	Quantity	Amount	Sub-Total in USD($)
Miscellaneous:				
Total in USD ($)				

Electronic Acknowledgement Receipt

EFS ID:	31813339
Application Number:	14840865
International Application Number:	
Confirmation Number:	2445
Title of Invention:	FLASH-DRAM HYBRID MEMORY MODULE
First Named Inventor/Applicant Name:	Hyun Lee
Customer Number:	151145
Filer:	Khaled Shami/Casey Berger
Filer Authorized By:	Khaled Shami
Attorney Docket Number:	0016.001000D
Receipt Date:	16-FEB-2018
Filing Date:	31-AUG-2015
Time Stamp:	11:54:59
Application Type:	Utility under 35 USC 111(a)

Payment information:

Submitted with Payment	yes
Payment Type	CARD
Payment was successfully received in RAM	$960
RAM confirmation Number	021618INTEFSW11553300
Deposit Account	
Authorized User	
The Director of the USPTO is hereby authorized to charge indicated fees and credit any overpayment as follows:	

File Listing:

Document Number	Document Description	File Name	File Size(Bytes)/ Message Digest	Multi Part /.zip	Pages (if appl.)
1	Issue Fee Payment (PTO-85B)	0016001000D_IssueFeePayment.pdf	121798 b07e45595df873356edd087cd512116240e4d8bb	no	1
Warnings:					
Information:					
2	Fee Worksheet (SB06)	fee-info.pdf	30061 769380a49c92bc8e06d1c1dfb5959d2273810ce5	no	2
Warnings:					
Information:					
		Total Files Size (in bytes):	151859		

This Acknowledgement Receipt evidences receipt on the noted date by the USPTO of the indicated documents, characterized by the applicant, and including page counts, where applicable. It serves as evidence of receipt similar to a Post Card, as described in MPEP 503.

New Applications Under 35 U.S.C. 111
If a new application is being filed and the application includes the necessary components for a filing date (see 37 CFR 1.53(b)-(d) and MPEP 506), a Filing Receipt (37 CFR 1.54) will be issued in due course and the date shown on this Acknowledgement Receipt will establish the filing date of the application.
National Stage of an International Application under 35 U.S.C. 371
If a timely submission to enter the national stage of an international application is compliant with the conditions of 35 U.S.C. 371 and other applicable requirements a Form PCT/DO/EO/903 indicating acceptance of the application as a national stage submission under 35 U.S.C. 371 will be issued in addition to the Filing Receipt, in due course.
New International Application Filed with the USPTO as a Receiving Office
If a new international application is being filed and the international application includes the necessary components for an international filing date (see PCT Article 11 and MPEP 1810), a Notification of the International Application Number and of the International Filing Date (Form PCT/RO/105) will be issued in due course, subject to prescriptions concerning national security, and the date shown on this Acknowledgement Receipt will establish the international filing date of the application.

14840865 - GAU: 2138

Receipt date: 08/31/2015

INFORMATION DISCLOSURE STATEMENT BY APPLICANT (Not for submission under 37 CFR 1.99)		
	Application Number	
	Filing Date	2015-08-31
	First Named Inventor	Hyun Lee
	Art Unit	
	Examiner Name	
	Attorney Docket Number	062453-036

	42	7053470	B1	2006-05-30	Sellers et al.	
	43	7062618	B2	2006-06-13	Tsunoda et al.	
	44	7089412	B2	2006-08-08	Chen	
	45	7102391	B1	2006-09-05	Sun et al.	
	46	7111142		2006-09-19	Spencer et al.	
	47	7155627	B2	2006-12-26	Matsui	
	48	7200021	B2	2007-04-03	Raghuram	
	49	7234099	B2	2007-06-19	Gower et al.	
	50	7353325		2008-04-01	Lofgren et al.	
Change(s) applied to document, /L.H./ 12/1/2016	51	7409491	B2	08/2008 ~~2008-12-05~~	Doblar et al.	
	52	7409590		2008-08-05	Moshayedi et al.	

EFS Web 2.1.17

ALL REFERENCES CONSIDERED EXCEPT WHERE LINED THROUGH. /S.E./

14840865 - GAU: 2138

Receipt date: 08/31/2015

INFORMATION DISCLOSURE STATEMENT BY APPLICANT (Not for submission under 37 CFR 1.99)		
	Application Number	
	Filing Date	2015-08-31
	First Named Inventor	Hyun Lee
	Art Unit	
	Examiner Name	
	Attorney Docket Number	062453-036

	53	7411859	B2	2008-08-12	Sohn et al.	
	54	7421552	B2	2008-09-02	Long	
	55	7467251	B2	2008-12-16	Park et al.	
Change(s) applied to document, /R.L./ 12/2/2016	56	7600142		~~1998-10-17~~ 10/2009	~~Cross~~ Ichikawa	
	57	7716411	B2	2010-05-11	Panabaker et al.	
	58	7818488	B2	2010-10-19	Park et al.	
	59	8086955		2011-12-27	Zhou et al.	
	60	8102614		2012-01-24	Song et al.	
	61	8233303	B2	2012-07-31	Best et al.	
	62	8301833		2012-10-30	Chen et al.	
	63	8407395		2013-03-26	Kim et al.	

EFS Web 2.1.17

ALL REFERENCES CONSIDERED EXCEPT WHERE LINED THROUGH. /S.E./

UNITED STATES PATENT AND TRADEMARK OFFICE

UNITED STATES DEPARTMENT OF COMMERCE
United States Patent and Trademark Office
Address: COMMISSIONER FOR PATENTS
P.O. Box 1450
Alexandria, Virginia 22313-1450
www.uspto.gov

APPLICATION NO.	ISSUE DATE	PATENT NO.	ATTORNEY DOCKET NO.	CONFIRMATION NO.
14/840,865	03/27/2018	9928186	0016.001000D	2445

151145 7590 03/07/2018
Shami Messinger PLLC
1000 Wisconsin Ave. NW
Suite 200
Washington, DC 20007

ISSUE NOTIFICATION

The projected patent number and issue date are specified above.

Determination of Patent Term Adjustment under 35 U.S.C. 154 (b)
(application filed on or after May 29, 2000)

The Patent Term Adjustment is 0 day(s). Any patent to issue from the above-identified application will include an indication of the adjustment on the front page.

If a Continued Prosecution Application (CPA) was filed in the above-identified application, the filing date that determines Patent Term Adjustment is the filing date of the most recent CPA.

Applicant will be able to obtain more detailed information by accessing the Patent Application Information Retrieval (PAIR) WEB site (http://pair.uspto.gov).

Any questions regarding the Patent Term Extension or Adjustment determination should be directed to the Office of Patent Legal Administration at (571)-272-7702. Questions relating to issue and publication fee payments should be directed to the Application Assistance Unit (AAU) of the Office of Data Management (ODM) at (571)-272-4200.

APPLICANT(s) (Please see PAIR WEB site http://pair.uspto.gov for additional applicants):

Hyun Lee, Ladera Ranch, CA;
Netlist, Inc., Irvine, CA;
Chi-She Chen, Walnut, CA;
Jeffrey C. Solomon, Irvine, CA;
Scott H. Milton, Irvine, CA;
Jayesh Bhakta, Cerritos, CA;

The United States represents the largest, most dynamic marketplace in the world and is an unparalleled location for business investment, innovation, and commercialization of new technologies. The USA offers tremendous resources and advantages for those who invest and manufacture goods here. Through SelectUSA, our nation works to encourage and facilitate business investment. To learn more about why the USA is the best country in the world to develop technology, manufacture products, and grow your business, visit SelectUSA.gov.

IR103 (Rev. 10/09)