US007363422B2

(12) United States Patent
Perego et al.

(10) Patent No.: US 7,363,422 B2
(45) Date of Patent: *Apr. 22, 2008

(54) **CONFIGURABLE WIDTH BUFFERED MODULE**

(75) Inventors: **Richard Perego**, San Jose, CA (US); **Fred Ware**, Los Altos Hills, CA (US); **Ely Tsern**, Los Altos, CA (US)

(73) Assignee: **Rambus Inc.**, Los Altos, CA (US)

(*) Notice: Subject to any disclaimer, the term of this patent is extended or adjusted under 35 U.S.C. 154(b) by 221 days.

This patent is subject to a terminal disclaimer.

(21) Appl. No.: **10/766,131**

(22) Filed: **Jan. 28, 2004**

(65) **Prior Publication Data**

US 2004/0186956 A1 Sep. 23, 2004

Related U.S. Application Data

(63) Continuation-in-part of application No. 10/272,024, filed on Oct. 15, 2002, which is a continuation of application No. 09/479,375, filed on Jan. 5, 2000, now Pat. No. 6,502,161.

(51) **Int. Cl.**
G06F 12/00 (2006.01)

(52) **U.S. Cl.** **711/105**; 711/115

(58) **Field of Classification Search** ..... None
See application file for complete search history.

(56) **References Cited**

U.S. PATENT DOCUMENTS

4,621,339 A 11/1986 Wagner et al.
4,631,666 A 12/1986 Harris et al.
4,644,532 A 2/1987 George et al.
4,667,305 A 5/1987 Dill et al.
4,747,070 A 5/1988 Trottier et al.
4,747,100 A 5/1988 Roach et al.
4,858,107 A 8/1989 Fedele
4,864,563 A 9/1989 Pavey et al.
4,947,257 A 8/1990 Fernandez et al.

(Continued)

FOREIGN PATENT DOCUMENTS

EP 0 198 429 10/1986

(Continued)

OTHER PUBLICATIONS

Intel Developer Forum, "DDR2 Memory In 2004 Servers—Recipes For Successful Designs", Sep. 2003.

(Continued)

Primary Examiner—Kevin Verbrugge
(74) *Attorney, Agent, or Firm*—Vierra Magen Marcus & DeNiro LLP

(57) **ABSTRACT**

A memory system architecture/interconnect topology includes a configurable width buffered module having a configurable width buffer device. The configurable width buffer device is coupled to at least one memory device on the configurable width memory module. The configurable width buffer device includes an interface and a configurable serialization circuit capable of varying a data path width or a number of contacts used at the interface of the configurable width buffer device in accessing the at least one memory device. In an alternate embodiment of the present invention, a multiplexer/demultiplexer circuit is provided. A state storage provides a data width for the configurable width buffer and a SPD provides the configurable width buffer and/or module capabilities to the memory system.

41 Claims, 17 Drawing Sheets

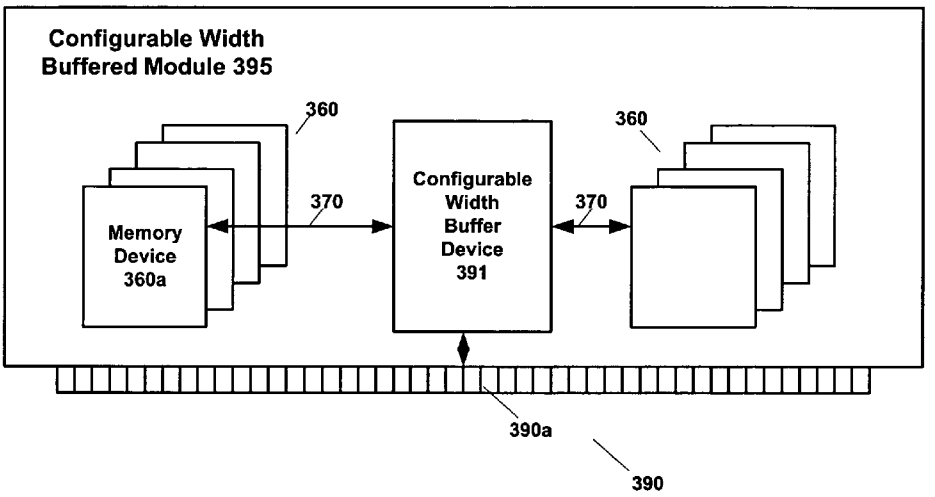

U.S. PATENT DOCUMENTS

4,977,498	A	12/1990	Rastegar et al.
5,034,917	A	7/1991	Bland et al.
5,068,650	A	11/1991	Fernandez et al.
5,228,132	A	7/1993	Neal et al.
5,228,134	A	7/1993	MacWilliams et al.
5,283,877	A	2/1994	Gastinel et al.
5,325,493	A	6/1994	Herrell et al.
5,355,467	A	10/1994	MacWilliams et al.
5,371,880	A	12/1994	Bhattacharya
5,400,360	A	3/1995	Richards et al.
5,408,646	A	4/1995	Olnowich et al.
5,475,818	A	12/1995	Molyneaux et al.
5,511,224	A	4/1996	Tran et al.
5,513,135	A	4/1996	Dell et al.
5,513,377	A	4/1996	Capowski et al.
5,537,394	A	7/1996	Abe et al.
5,544,342	A	8/1996	Dean
5,553,266	A	9/1996	Metzger et al.
5,557,266	A	9/1996	Calvignac et al.
5,574,945	A	11/1996	Elko et al.
5,602,780	A	2/1997	Diem et al.
5,604,735	A	2/1997	Levinson et al.
5,630,095	A	5/1997	Snyder
5,642,444	A	6/1997	Mostafavi
5,655,113	A	8/1997	Leung et al.
5,659,710	A	8/1997	Sherman et al.
5,701,313	A	12/1997	Purdham
5,742,840	A	4/1998	Hansen et al.
5,748,872	A	5/1998	Norman
5,787,083	A	7/1998	Iwamoto et al.
5,802,054	A	9/1998	Bellenger
5,802,565	A	9/1998	McBride
5,805,798	A	9/1998	Kearns et al.
5,838,985	A	11/1998	Ohki
5,848,145	A	12/1998	Gallagher et al.
5,860,080	A	1/1999	James et al.
5,867,180	A	2/1999	Katayama et al.
5,867,422	A	2/1999	John
5,883,839	A	3/1999	Tosaka et al.
5,884,036	A	3/1999	Haley
5,893,921	A	4/1999	Bucher et al.
5,898,863	A	4/1999	Ofer et al.
5,900,017	A	5/1999	Genduso et al.
5,901,294	A	5/1999	Tran et al.
5,911,052	A	6/1999	Singhal et al.
5,913,044	A	6/1999	Tran et al.
5,917,760	A	6/1999	Millar
5,923,893	A	7/1999	Moyer et al.
5,926,839	A	7/1999	Katayama
5,953,215	A	9/1999	Karabatsos
5,982,238	A	11/1999	Soderquist
6,006,318	A	12/1999	Hansen et al.
6,016,282	A	1/2000	Keeth
6,034,878	A	3/2000	Osaka et al.
6,038,682	A	3/2000	Norman
6,065,092	A	5/2000	Roy
6,092,229	A	7/2000	Boyle et al.
6,104,417	A	8/2000	Nielsen et al.
6,108,731	A	8/2000	Suzuki et al.
6,125,419	A	9/2000	Umemura et al.
6,142,830	A	11/2000	Looeffler
6,151,648	A	11/2000	Haq
6,154,826	A	11/2000	Wulf et al.
6,154,855	A	11/2000	Norman
6,160,423	A	12/2000	Haq
6,185,644	B1	2/2001	Farmwald et al.
6,185,654	B1	2/2001	Van Doren
6,208,273	B1	3/2001	Dye et al.
6,247,100	B1	6/2001	Drehmel et al.
6,255,859	B1	7/2001	Haq
6,263,413	B1	7/2001	Motomura et al.
6,266,252	B1	7/2001	Karabatsos
6,272,609	B1	8/2001	Jeddeloh
6,276,844	B1	8/2001	Coteus et al.
6,292,877	B1	9/2001	Ryan
6,317,352	B1	11/2001	Halbert et al.
6,327,205	B1	12/2001	Haq
6,330,687	B1	12/2001	Griffith
6,345,321	B1	2/2002	Litaize et al.
6,369,605	B1	4/2002	Bonella et al.
6,408,402	B1	6/2002	Norman
6,414,904	B2	7/2002	So et al.
6,425,064	B2	7/2002	Soderquist
6,434,035	B2	8/2002	Miersch et al.
6,446,158	B1	9/2002	Karabatsos
6,449,213	B1	9/2002	Dodd et al.
6,449,679	B2	9/2002	Ryan
6,449,703	B2	9/2002	Jeddeloh
6,449,727	B1	9/2002	Toda
6,477,592	B1	11/2002	Chen et al.
6,477,614	B1	11/2002	Leddige et al.
6,480,409	B2	11/2002	Park et al.
6,480,927	B1	11/2002	Bauman
6,487,102	B1	11/2002	Halbert et al.
6,493,250	B2	12/2002	Halbert et al.
6,502,161	B1	12/2002	Perego et al.
6,510,503	B2	1/2003	Gillingham et al.
6,513,080	B1	1/2003	Haq
6,513,091	B1	1/2003	Blackmon et al.
6,526,469	B1	2/2003	Drehmel et al.
6,530,006	B1	3/2003	Dodd et al.
6,530,033	B1	3/2003	Raynham et al.
6,553,450	B1	4/2003	Dodd et al.
6,557,069	B1	4/2003	Drehmel et al.
6,587,912	B2	7/2003	Leddige et al.
6,604,180	B2	8/2003	Jeddeloh
6,622,224	B1	9/2003	Cloud
6,625,687	B1	9/2003	Halbert et al.
6,633,947	B1	10/2003	Holman et al.
6,639,820	B1	10/2003	Khandekar et al.
6,643,752	B1	11/2003	Donnelly et al.
6,690,191	B2	2/2004	Wu et al.
6,690,726	B1	2/2004	Yavits et al.
6,708,248	B1	3/2004	Garrett, Jr. et al.
6,820,163	B1	11/2004	McCall et al.
6,853,938	B2	2/2005	Jeddeloh
6,854,042	B1	2/2005	Karabatsos
6,877,079	B2	4/2005	Yoo et al.
6,889,284	B1	5/2005	Nizar et al.
6,968,419	B1	11/2005	Holman
6,970,968	B1	11/2005	Holman
7,007,130	B1	2/2006	Holman
7,110,400	B2	9/2006	Hronik
2001/0039606	A1	11/2001	Jeddeloh
2002/0083287	A1	6/2002	Zumkehr et al.
2002/0112119	A1	8/2002	Halbert et al.
2002/0124153	A1	9/2002	Litaize et al.
2002/0144071	A1	10/2002	Williams et al.
2002/0184462	A1	12/2002	Jeddeloh
2003/0012229	A1	1/2003	Braun
2003/0018880	A1	1/2003	Litaize et al.
2003/0074490	A1	4/2003	Pochmuller
2003/0120895	A1	6/2003	Litaize et al.
2003/0177313	A1	9/2003	Iyer et al.
2004/0015650	A1	1/2004	Zumkehr et al.
2004/0095838	A1	5/2004	Li
2004/0105292	A1*	6/2004	Matsui 365/63
2004/0145935	A1	7/2004	Jakobs
2004/0221106	A1*	11/2004	Perego et al. 711/115
2004/0246767	A1	12/2004	Vogt
2004/0246785	A1	12/2004	Vogt
2004/0246786	A1	12/2004	Vogt
2004/0250024	A1	12/2004	Vogt
2004/0250153	A1	12/2004	Vogt

2004/0250181	A1	12/2004	Vogt et al.
2004/0260991	A1	12/2004	Vogt et al.
2004/0267481	A1	12/2004	Resnick

FOREIGN PATENT DOCUMENTS

EP	0 282 070	B1	8/1994
EP	0 811 916	A2	12/1997
EP	1069509	A2	1/2001
EP	05001769		5/2006
GB	2 383 656	A	7/2003
WO	WO99/30240		6/1999
WO	WO99/41666		8/1999
WO	WO99/41667		8/1999
WO	WO 2004/111856		12/2004
WO	PCT/US05/17066		11/2005

OTHER PUBLICATIONS

QBM Alliance, Platform Conference, Quad Band Memory (QBM tm): DDR 200/266/333 devices producing DDR400/533/667, Jan. 23-24, 2002.
Karabatsos, C., "Quad Band Memory (QBM) Technology", Kentron Technologies, Inc., Apr. 2001.
Quad Band Memory (QBM), "The 'QBM Enabled' VIA PT880/PM880 Chipset Solutions with the Fastest Memory".
Weber, F., "The AMD Athlon Processor: Future Directions", AMD.
"Intel 82804AA Memory Repeater Hub for SDRAM (MRH-S) Datasheet", Intel Corp., pp. 2-48 (Nov. 1999).
"Intel 82805AA Memory Translater Hub (MTH) Datasheet", Intel Corp., pp. 1-48 (Nov. 1999).
Cataldo, A., "TI Fields DSP-Based Media Processor on a DIMM", EE Times (Jan. 2000).
Mac Williams, P., "PC Memory Directions For 1999 and Beyond", Intel Developer Forum, pp. 1-10 (Sep. 1998).
Johnson, B., "Direct RDRAM Basic Architecture and Program Overview", Intel Developer Forum, pp. 1-14 (Sep. 1998).
Gillingham, P., "SLDRAM Architectural and Functional Overview", SLDRAM Consortium, SLDRAM Inc., pp. 1-14 (Aug. 1997).
"Draft Standard for a High-Speed Memory Interface (Synclink)", Draft 0.99 IEEE P1596.7-199X, IEEE Inc., pp. 1-51 (1996).
Wiggers, H., "SyncLink A Proposal for an Implementation of IEEE P1596.4", Hewlett Packard, pp. 1-20 (Mar. 1995).
"KMM377S1620CT2 SDRAM Module Datasheet", Samsung Electronics Inc., pp. 1-2 (Nov. 1998).
"SLD4M18DR400 4MEG×18 SLDRAM Datasheet", SLDRAM Inc., pp. 1-69 (Jul. 1998).
Poulton, J., "Signaling in High Performance Memory Systems", IEEE Solid State Circuits Conference, slides 1-59 (Feb. 1999).
"SLDRAM 400Mb/s/pin Command/Address Repeater", SLD10400 Rev .5, SLDRAM Consortium, pp. 1-12 (Jan. 7, 1998).
Minutes of meeting No. 75 JEDEC JC-42.3 Committee on RAM Memories, and referenced attachment "Y" of the presentation titled "SyncLink", May 24, 1995, New Orleans.
Intel Developer Forum, "Fully Buffered DIMM (FB-DIMM) Server Memory Architecture: Capacity, Performance, Reliability, and Longevity", Feb. 18, 2004.
Intel Developer Forum, "Fully Buffered DIMM (FB-DIMM) Design Considerations", Feb. 18, 2004.
Jeddeloh, Joe, "Fully Buffered DIMM (FB-DIMM)", Advanced Systems Technology, Micron Technology, Inc. Apr. 15-16, 2004.
IEEE Standard for Scalable Coherent Interface (SCI), "Microprocessor and Microcomputer Standards Subcommittee of the IEEE Computer Society", IEEE Std 1596-1992.
SCI, "P1596: SCI, A Scalable Coherent Interface", Nov. 28, 1988.
Gustavson et al., DRAFT "The Scalable Coherent Interface Project (SuperBus)", SCI, Aug. 22, 1988, Rev. 14.
Schanke, "Proposal for Clock Distribution in SCI", SCI, May 5, 1989.
James, "Scalable I/O Architecture for Buses", COMPCON Spring 1989, SCI, Nov. 28, 1988.
Volz et al., "Position Paper On Global Clock For the Futurebus +", SCI, 1989.
Kristiansen et al., "Scalable Coherent Interface", to appear in Eurobus Conference Proceedings, May 1989.
PCT International Search Report (Jun. 27, 2001) 4 pages.
Microsoft Press Computer Dictionary, 3rd Ed., 1997, pp. 48 and 68.
Gustavson et al., "Macintosh HD:Desktop Folder:SLDRAMrepeaterConcerns", Sunday, Nov. 23, 1997, 4 pages.
U.S. Appl. No. 10/713,868, filed Nov. 14, 2003 by Pete D. Vogt.
U.S. Appl. No. 10/714,025, filed Nov. 14, 2003 by Pete D. Vogt.
U.S. Appl. No. 10/714,026, filed Nov. 14, 2003 by Pete D. Vogt.
U.S. Appl. No. 10/883,474, filed Jun. 30, 2004 by Pete D. Vogt.
U.S. Appl. No. 10/882,999, filed Jun. 30, 2004 by Pete D. Vogt.
U.S. Appl. No. 10/859,438, filed May 31, 2004 by Pete D. Vogt.
U.S. Appl. No. 10/858,850, filed May 31, 2004 by Pete D. Vogt.
U.S. Appl. No. 10/859,060, filed May 31, 2004 by Pete D. Vogt.
Ng, R. (Sun Microsystems Inc.), "Fast computer memories", IEEE Spectrum, Oct. 1992, pp. 36-39.
Salters, R.H.W. (Philips Research Laboratories), "Fast DRAMS for sharper TV", IEEE Spectrum, Oct. 1992, pp. 40-42.
Jones, F (United Memories, Inc.), "A new era of fast dynamic RAMs", IEEE Spectrum, Oct. 1992, pp. 43-49.
Farmwald, M. et al. (Rambus Inc.), "A fast path to one memory", IEEE Spectrum, Oct. 1992, pp. 50-51.
Gjessing, S. (University of Oslo), Gustavson, D.B (Stanford Linear Accelerator Center), James, D. et al. (Apple Computer Inc.), Wigger, H. (Hewlett-Packard Co.), "A RAM link for high speed", IEEE Spectrum, Oct. 1992, pp. 52-53.
The Institute of Electrical and Electronics Engineering , Inc., "IEEE Standard for High-Bandwidth Memory Interface Based on Scalable Coherent Interface (SCI) Signaling Technology (RamLink)", 1996, pp. 1-91.
JEDEC Standard No. 21-C, pp. 4.20.4-1 through 4.20.4-69, 4.20.4-184 PIN, PC1600/2100 DDR SDRAM Registered DIMM Design Specificationm, Revision 1.2.
Micron, 240-Pin 256MB, 512MB, 1GB DDR2 SDRAM FBDIMM (SR, FB×72) Features, Micron Technology, Inc., 2004, pp. 1-36.
Micron, 256MB, 512MB, 1GB: (x72, ECC, DR) 168-Pin SDRAM RDIMM, Synchronous DRAM Module, Micron Technology, Inc., 2001, pp. 1-28.
Lizy Kurian John, "VaWiRAM: A Variable Width Random Access Memory Module", 9th International Conference on VLSI Design, Jan. 1996, pp. 219-224, 1995 IEEE.
Request for Declaration of Interference, filed on Apr. 13, 2006 in U.S. Appl. No. 11/203,652 to Drehmel et al., including exhibits A through K.
Jerry D. Gibson, Editor-in-Chief, "The Mobile Communications Handbook, " copyright 1996 CRC Press, Inc., p. 24.
G. Doettling et al., "S/390 Parallel Enterprise Server Generation 3: A Balanced System and Cache Structure," IBM J. Res. Develop., vol. 41 (No. 4/5), Jul./Sep. 1997, pp. 405-428.
JEDEC Standard- "FBDIMM Specification: High Speed Differential PTP Link at 1.5V," JESDS-18, Sep. 2006, available at "http://www.jedec.org/download/search/JESD8-18.pdf".
Excel Spreadsheet, entitled "Patents.xls," available at "http://www.jedec.org/download/search/FBDIMM/patents.xls".
"Patentica" letter, dated Dec. 18, 2004, 4 pages, referenced in Excel Spreadsheet, entitled "Patents.xls."
"Kantron" letter, dated Jan. 23, 2006, 1 page, referenced in Excel spreadsheet, entitled "Patents.xls. "
"Wintec " letter , dated Mar. 19, 2003, 1 page , referenced in Excel Spreadsheet, entitled "Patents.xls."
"Wintec" letter, dated Apr. 2, 2003, 1 page, referenced in Excel Spreadsheet, entitled "Patents.xls."
"AMD" letter, dated Apr. 12, 2004, 1 page , referenced in Excel Spreadsheet, entitled "Patents.xls."
"Micron" letter, dated Dec. 2, 2003, 3 pages , referenced in Excel Spreadsheet, entitled "Patents.xls."
"Micron" letter, dated Sep. 16, 2005, 1 page, referenced in Excel Spreadsheet, entitled "Patents.xls."
"Inphi" letter, dated Mar. 3, 2005, 1 page, referenced in Excel Spreadsheet, entitled "Patents.xls."
"Inphi" letter, dated Jun. 6, 2005, 1 page, referenced in Excel Spreadsheet, entitled "Patents.xls."
"Samsung" letter, dated Oct. 25, 2004, 1 page, referenced in Excel Spreadsheet, entitled "Patents.xls."
Communication from European Patent Office dated Mar. 9, 2007.

* cited by examiner

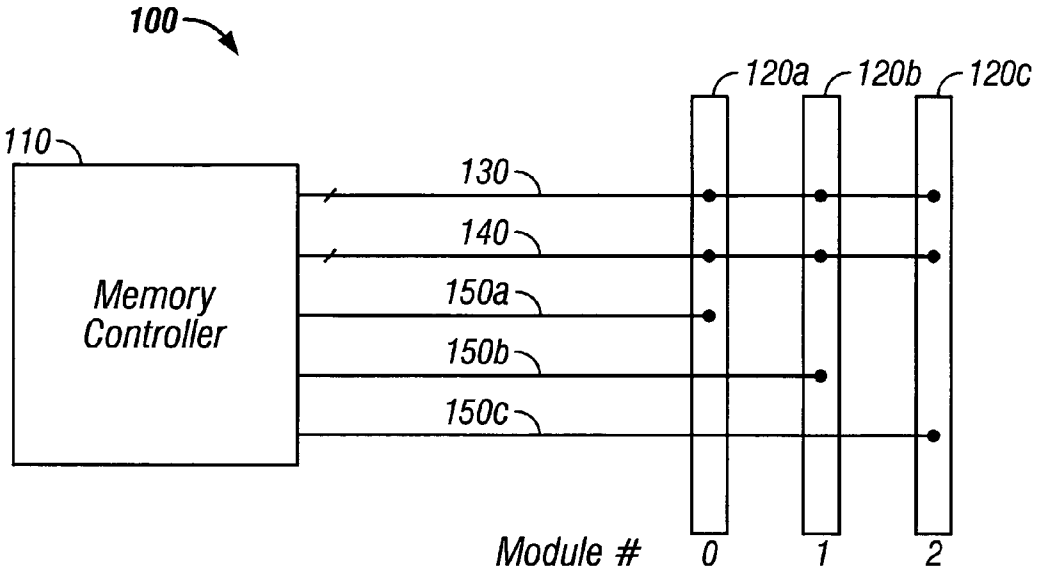

FIG. 1
(Prior Art)

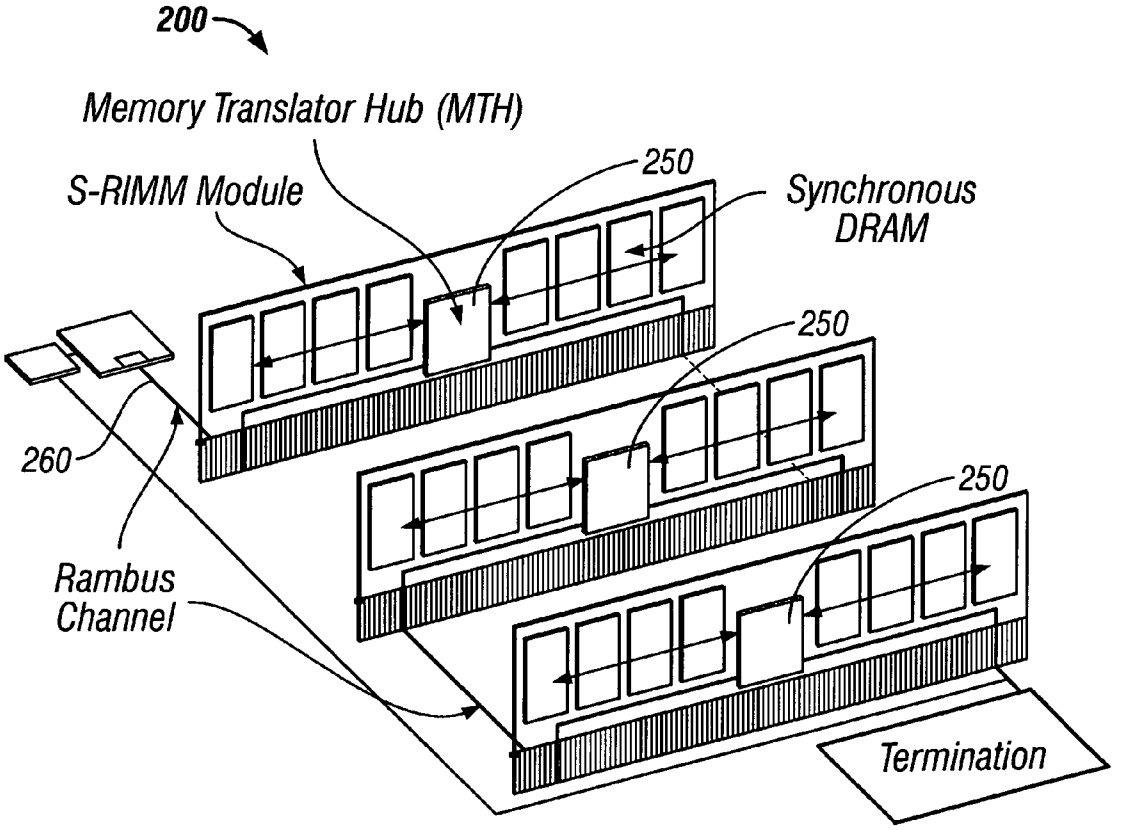

FIG. 2A
(Prior Art)

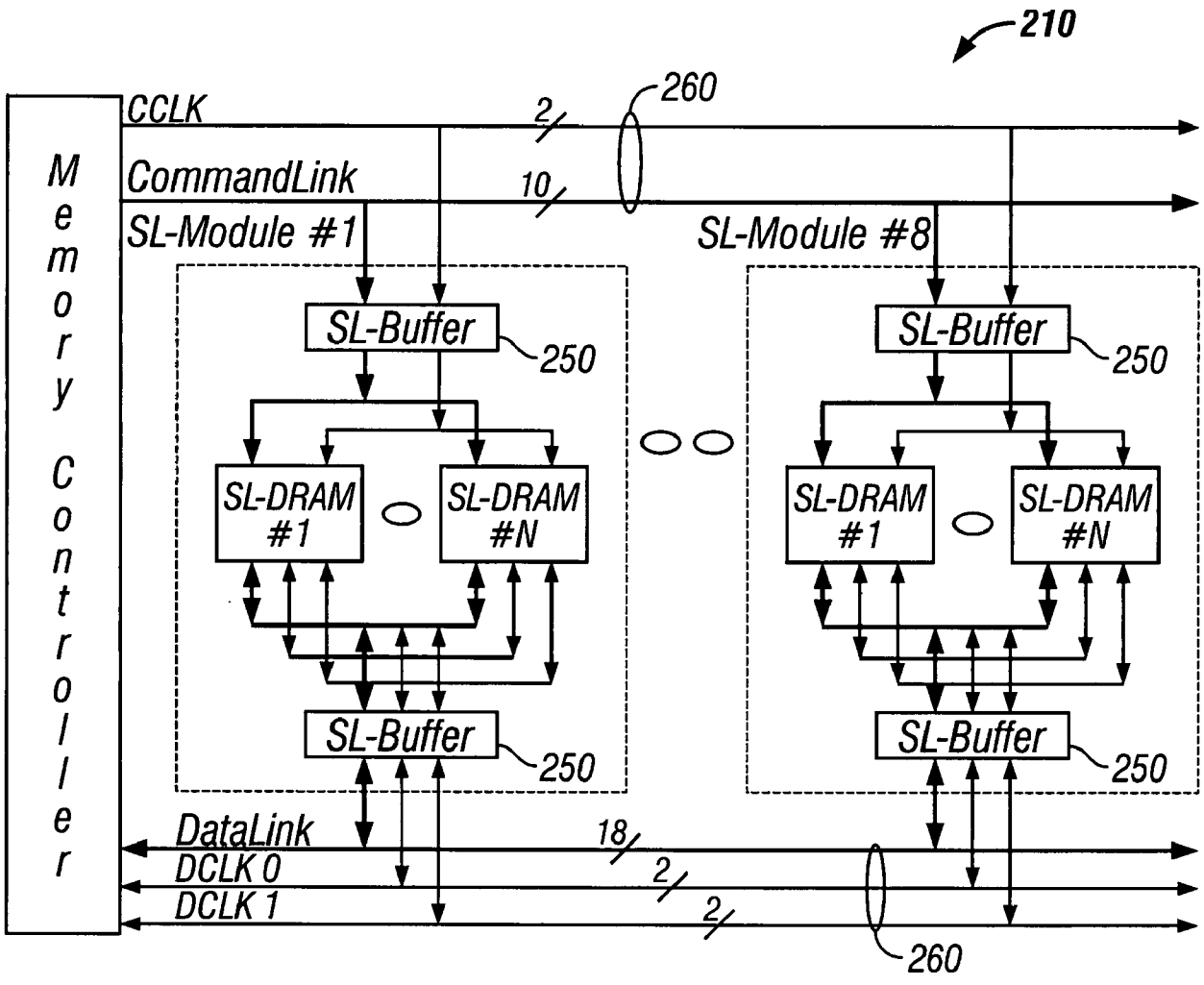

FIG. 2B
(Prior Art)

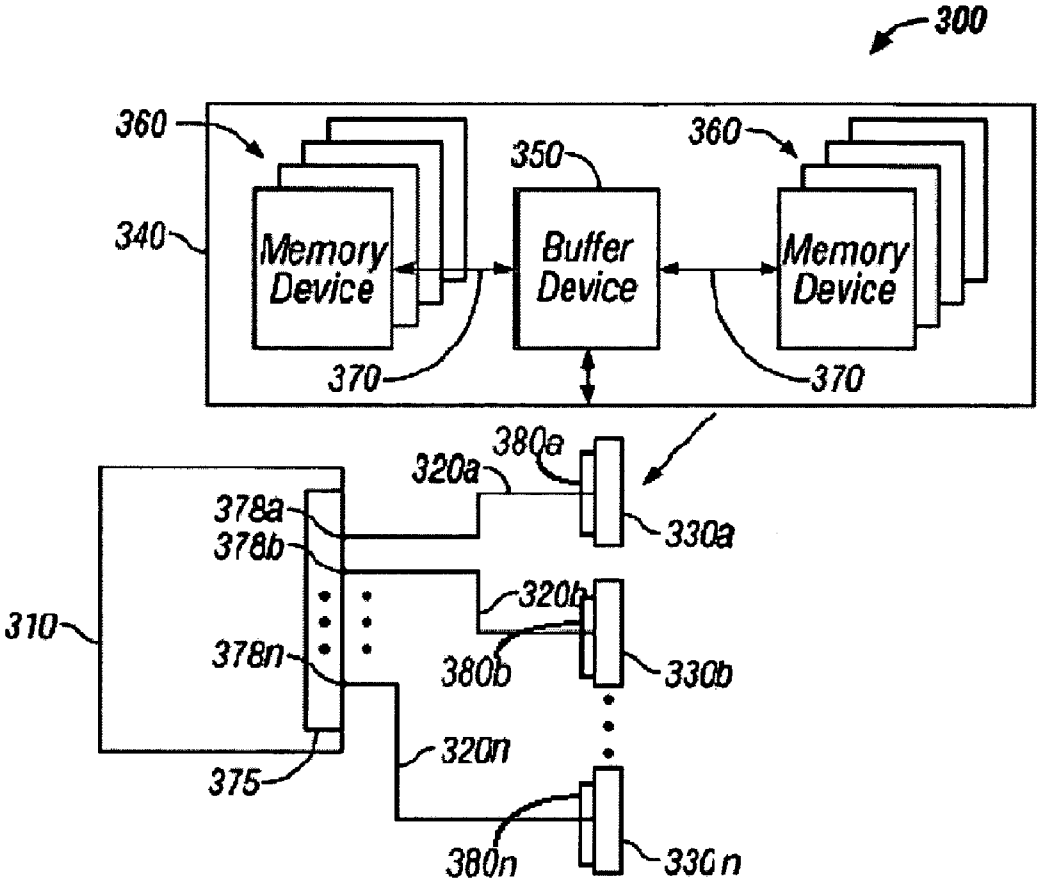
300
360
360
350
340
Memory Device
Buffer Device
Memory Device
370
370
380a
320a
330a
378a
378b
320b
310
378n
380b
330b
320n
375
380n
330n

FIG. 3A

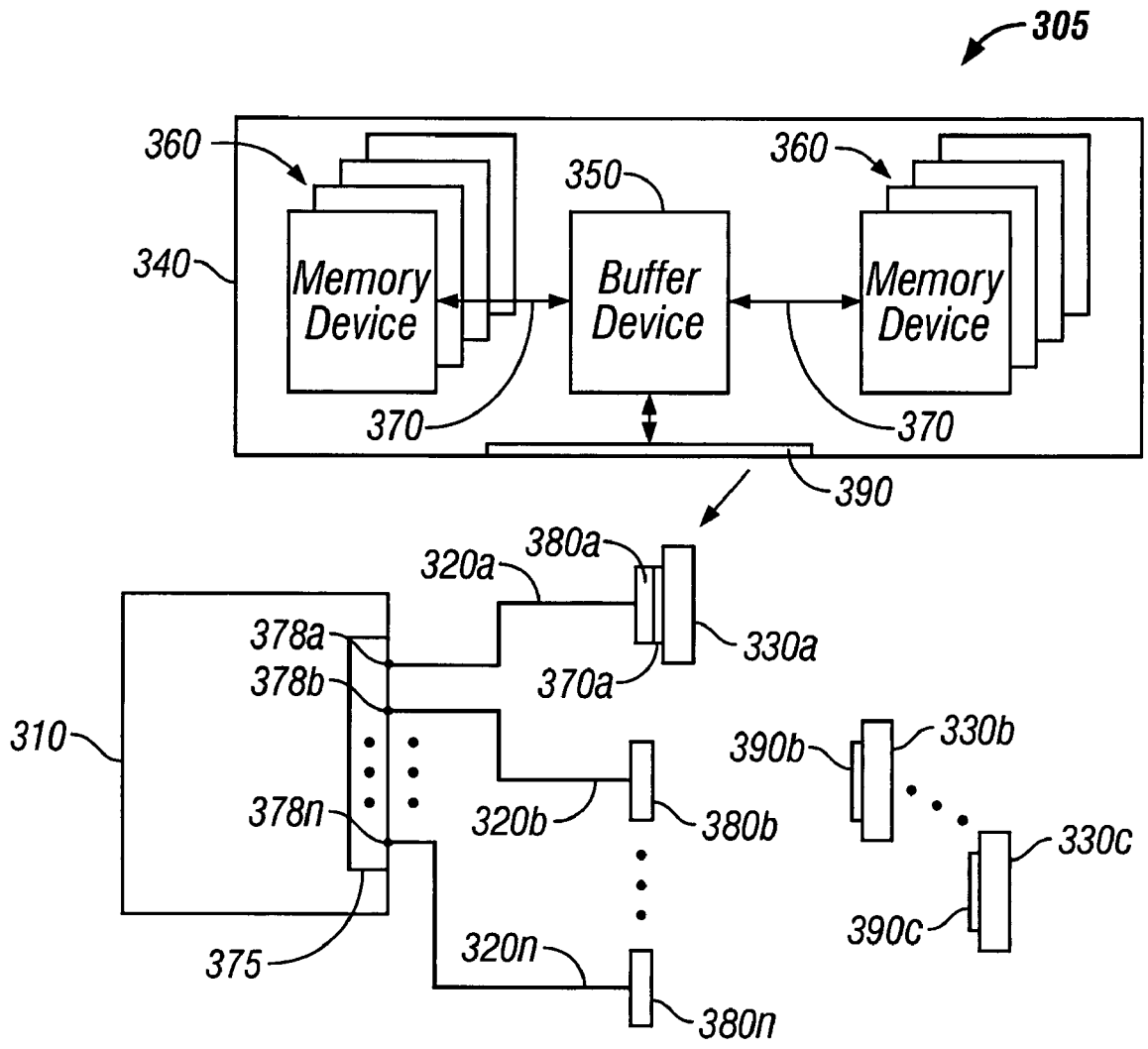
305
360
340
Memory Device
350
Buffer Device
360
Memory Device
370
370
390
380a
320a
330a
378a
378b
370a
310
390b
330b
378n
320b
380b
330c
390c
375
320n
380n

FIG. 3B

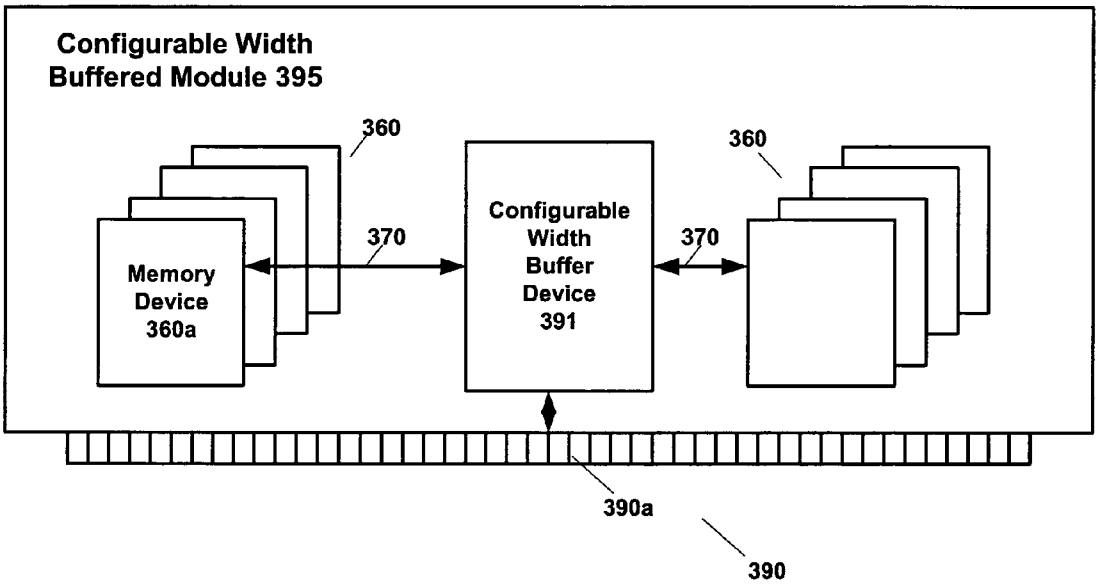
Configurable Width
Buffered Module 395
360
360
370
370
Memory
Device
360a
Configurable
Width
Buffer
Device
391
390a
390

Fig. 3C

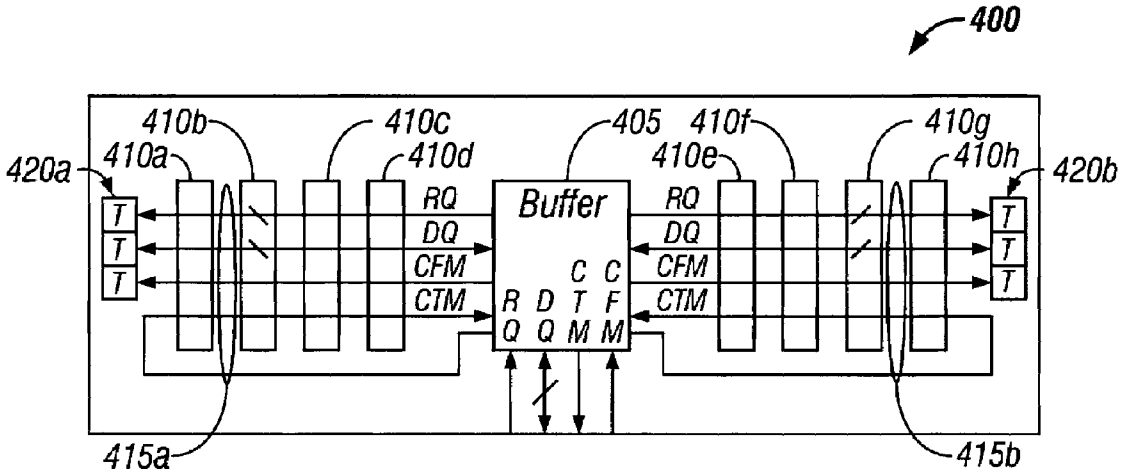
400
410b
410c
405
410f
410g
420a
410a
410d
410e
410h
420b
Buffer
RQ
DQ
CFM
CTM
RQ
DQ
CFM
CTM
C C
T F
R D
Q Q M M
T
T
T
T
T
T
415a
415b

FIG. 4A

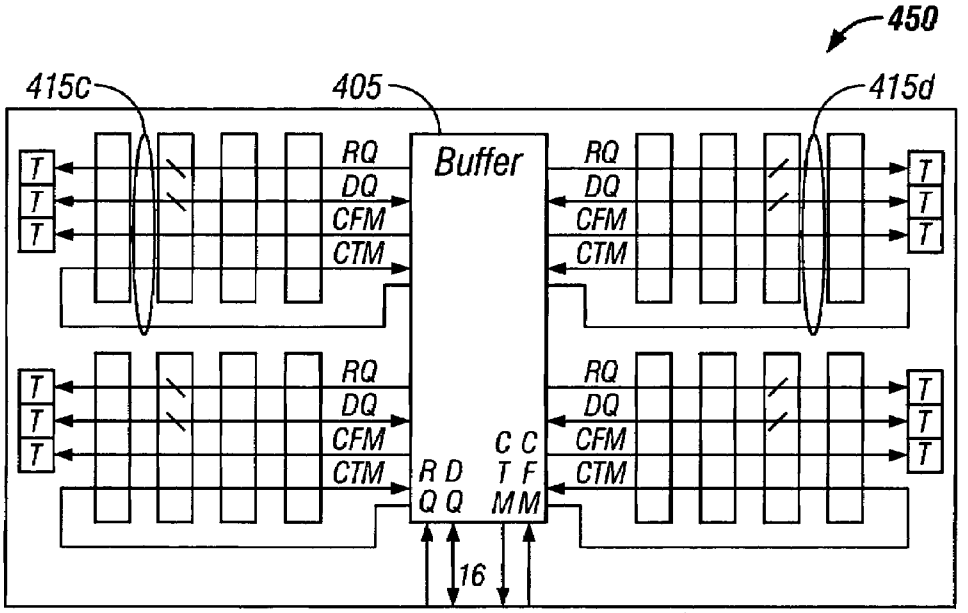
450
415c
405
415d
Buffer
RQ
DQ
CFM
CTM
RQ
DQ
CFM
CTM
T
T
T
T
T
T
C C
T F
R D
Q Q M M
16

FIG. 4B

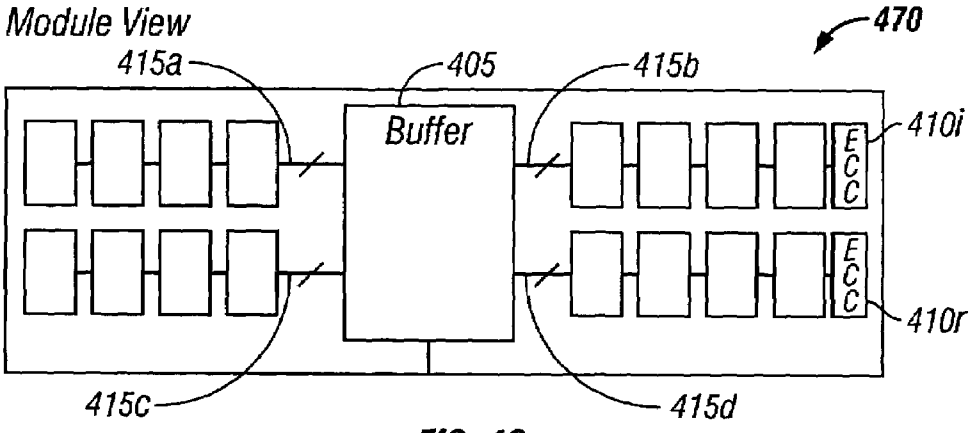
Module View
470
415a
405
415b
Buffer
410i
ECC
ECC
410r
415c
415d

FIG. 4C

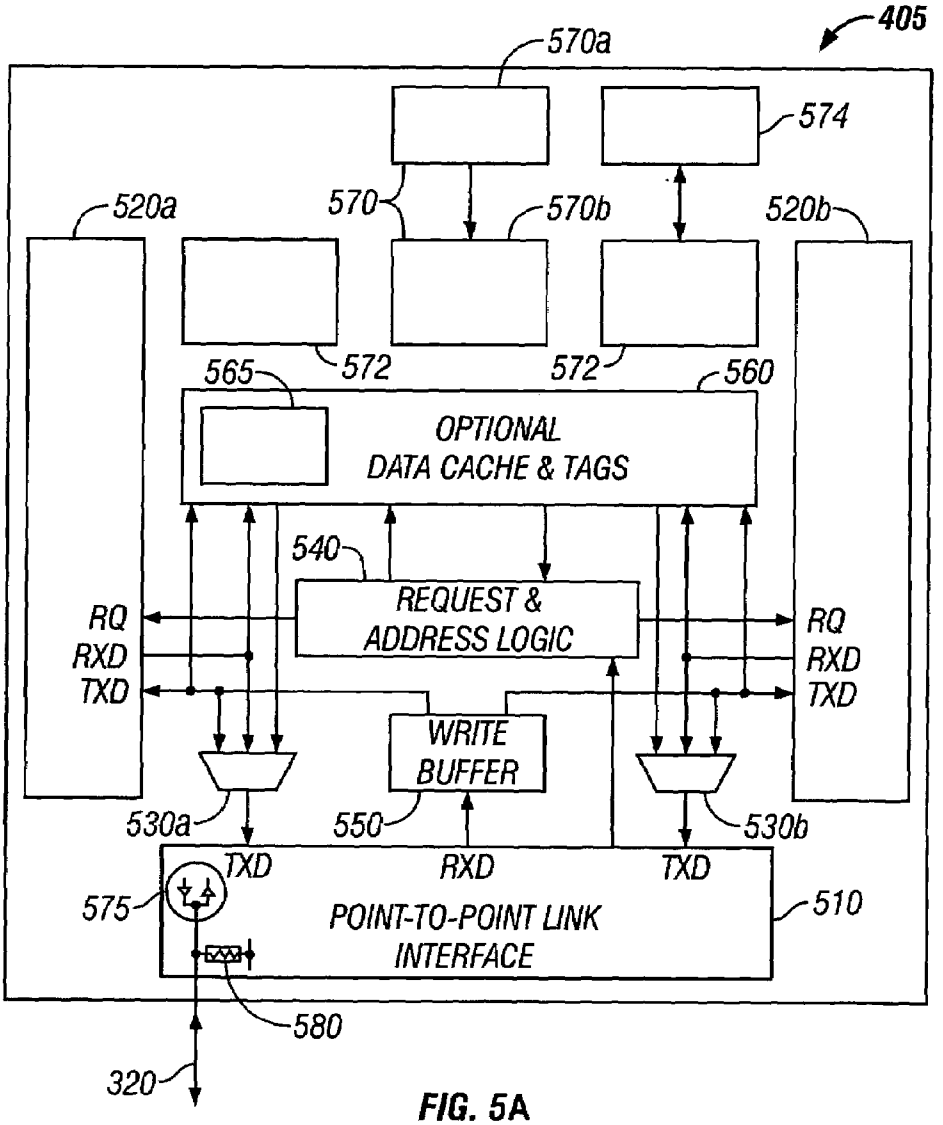
405
570a
574
520a
570
570b
520b
565
572
572
560
OPTIONAL
DATA CACHE & TAGS
540
REQUEST &
ADDRESS LOGIC
RQ
RXD
TXD
RQ
RXD
TXD
WRITE
BUFFER
530a
550
530b
TXD
RXD
TXD
575
POINT-TO-POINT LINK
INTERFACE
510
580
320

FIG. 5A

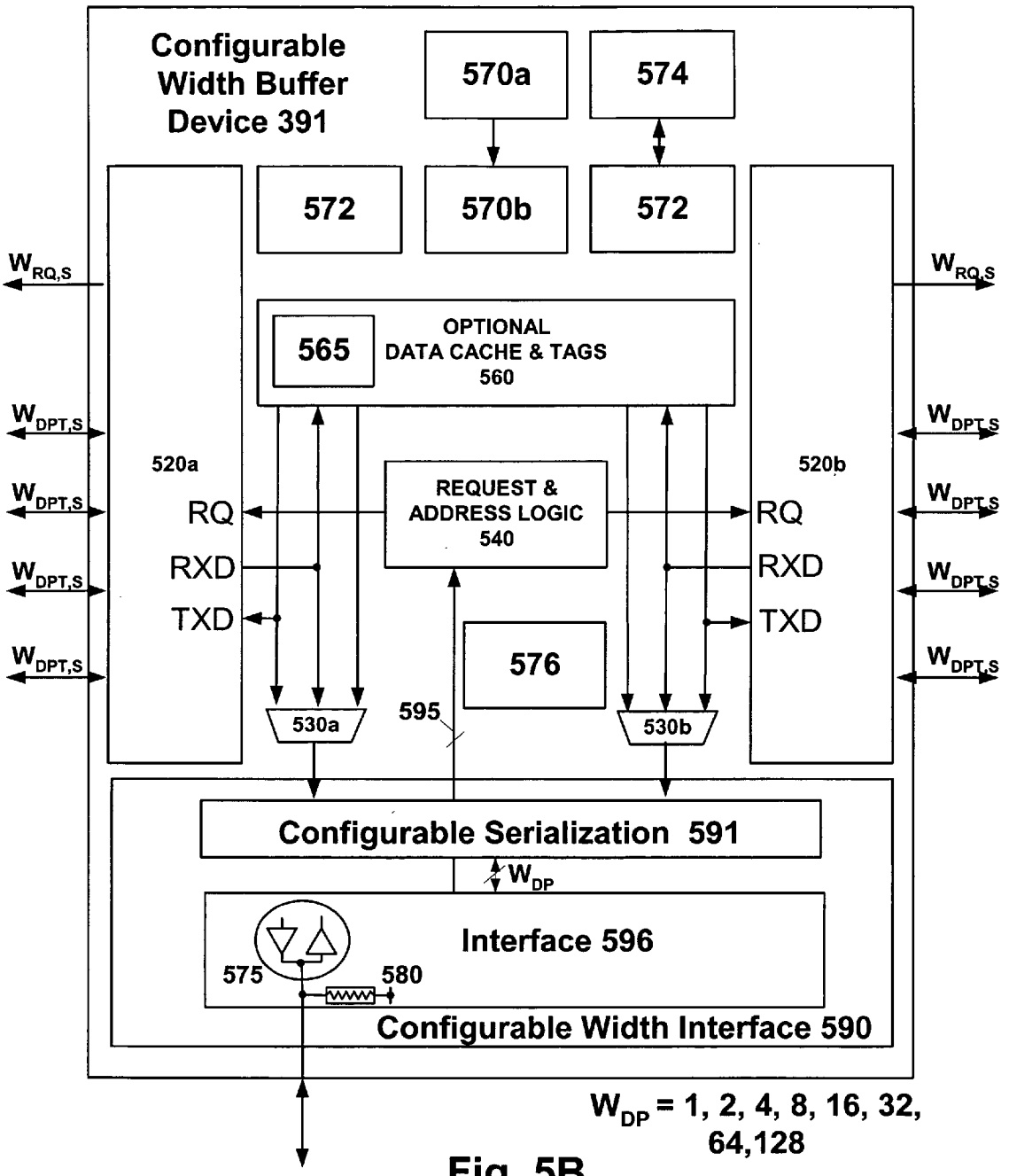
Configurable Width Buffer Device 391
570a
574
572
570b
572
$W_{RQ,S}$
$W_{RQ,S}$
565
OPTIONAL DATA CACHE & TAGS 560
$W_{DPT,S}$
$W_{DPT,S}$
$W_{DPT,S}$
$W_{DPT,S}$
520a
520b
RQ
RXD
TXD
REQUEST & ADDRESS LOGIC 540
RQ
RXD
TXD
576
595
530a
530b
Configurable Serialization 591
W_{DP}
Interface 596
575
580
Configurable Width Interface 590
W_{DP} = 1, 2, 4, 8, 16, 32, 64,128

Fig. 5B

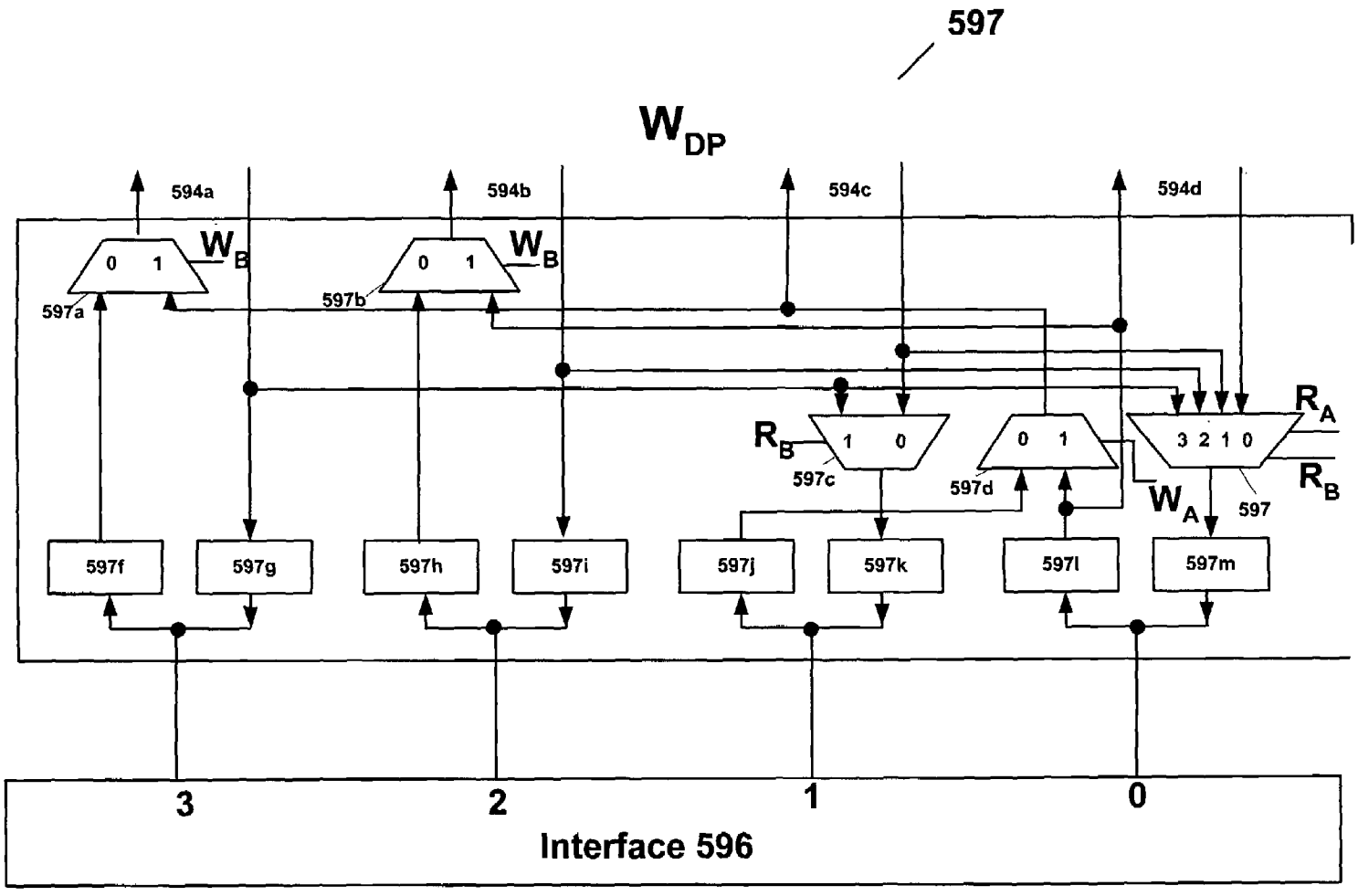
597
W_{DP}
594a
594b
594c
594d
0 1
W_B
597a
597b
R_B
1 0
597c
597d
3 2 1 0
R_A
R_B
W_A
597
597f
597g
597h
597i
597j
597k
597l
597m
3
2
1
0
Interface 596

Fig. 5C

Width	Write		Read		Interface 596 Connections
	W_A	W_B	R_A	R_B	
1	1	1	A_0	A_1	0
2	0	1	0	A_0	0 and 1
4	0	0	0	0	3, 2, 1 and 0

Fig. 5D

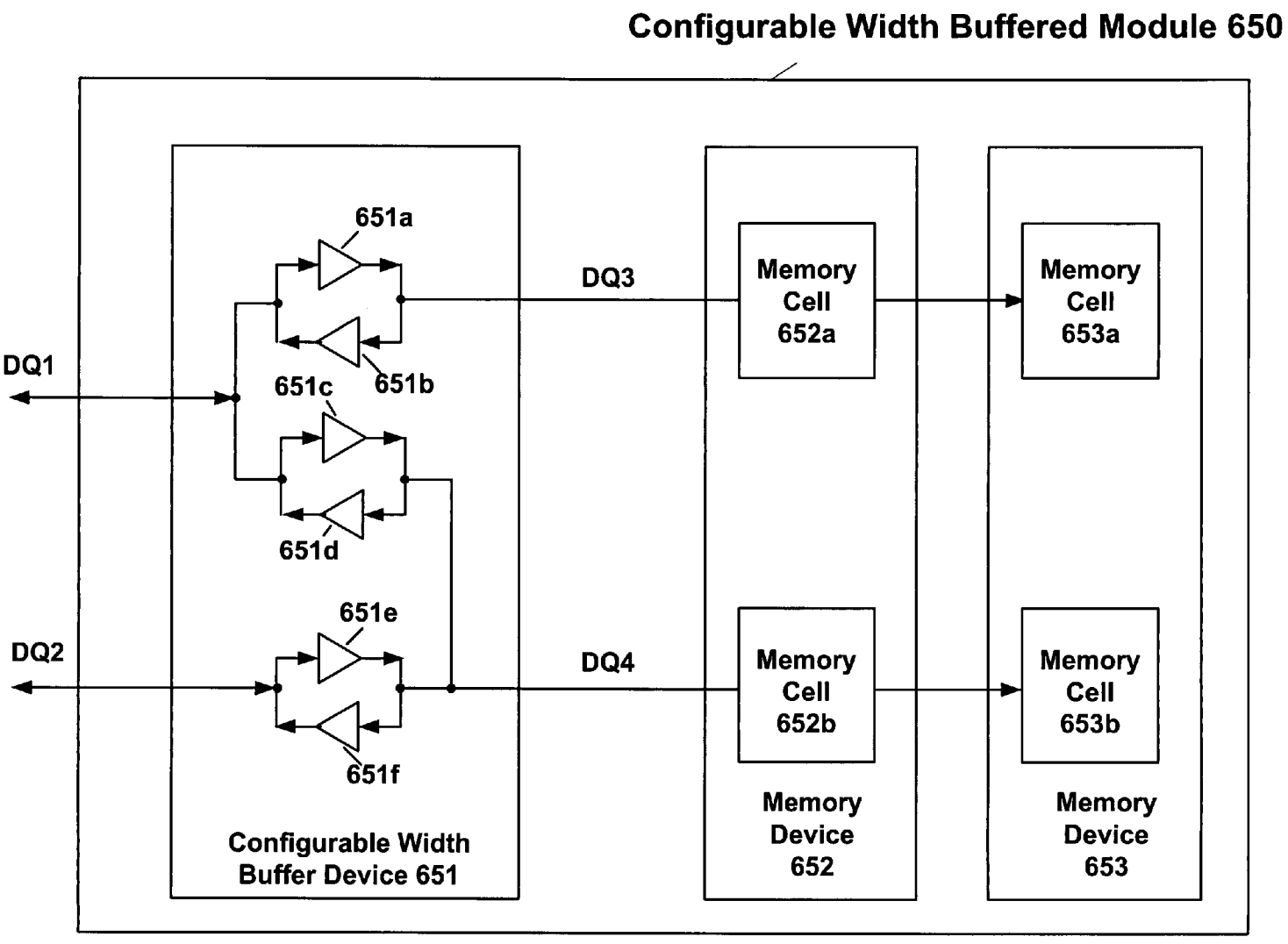
Configurable Width Buffered Module 650
651a
651b
651c
651d
651e
651f
DQ1
DQ2
DQ3
DQ4
Memory Cell 652a
Memory Cell 652b
Memory Cell 653a
Memory Cell 653b
Memory Device 652
Memory Device 653
Configurable Width Buffer Device 651

Fig. 5E

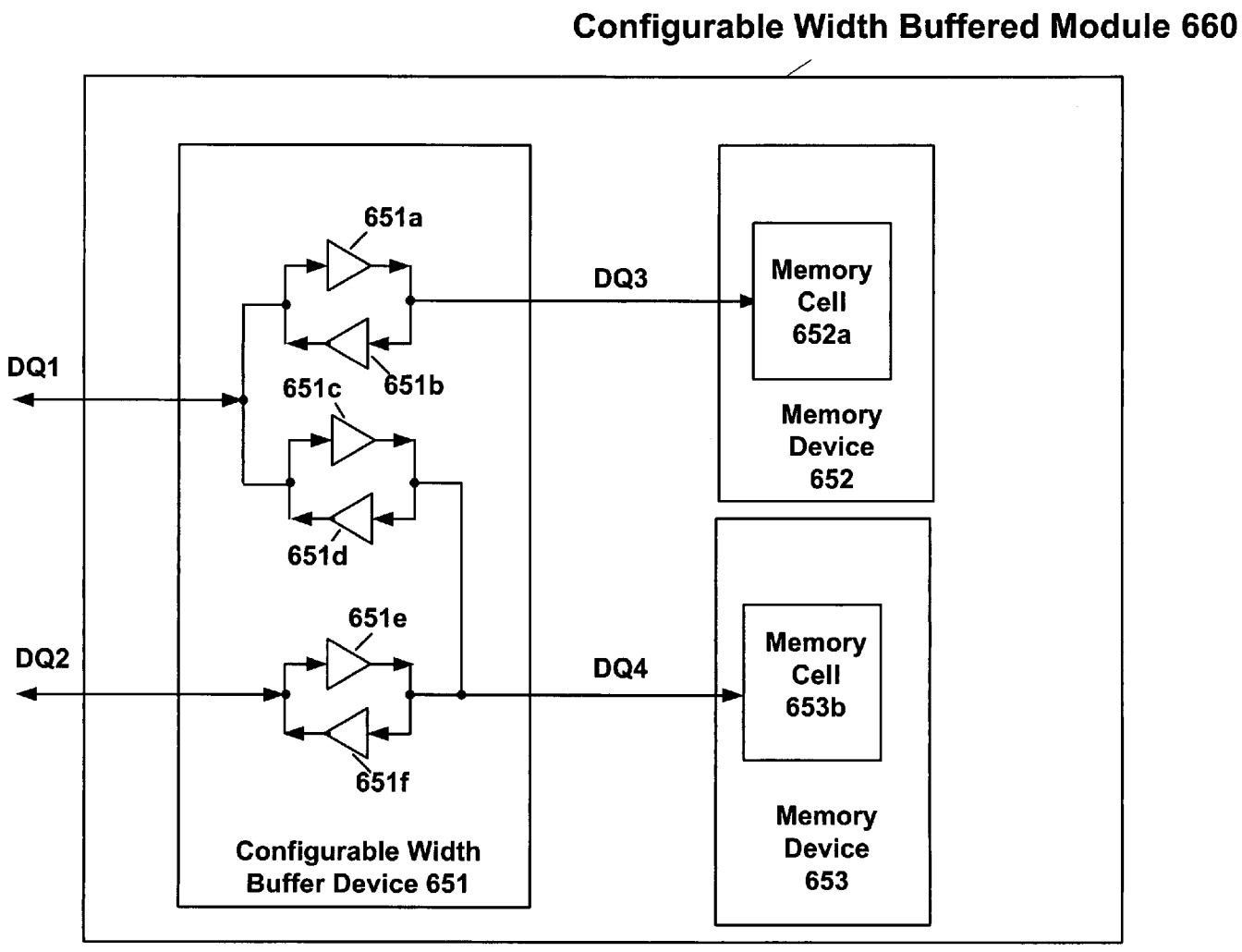
Configurable Width Buffered Module 660
651a
DQ3
Memory Cell 652a
DQ1
651c
651b
Memory Device 652
651d
651e
DQ2
DQ4
Memory Cell 653b
651f
Memory Device 653
Configurable Width Buffer Device 651

Fig. 5F

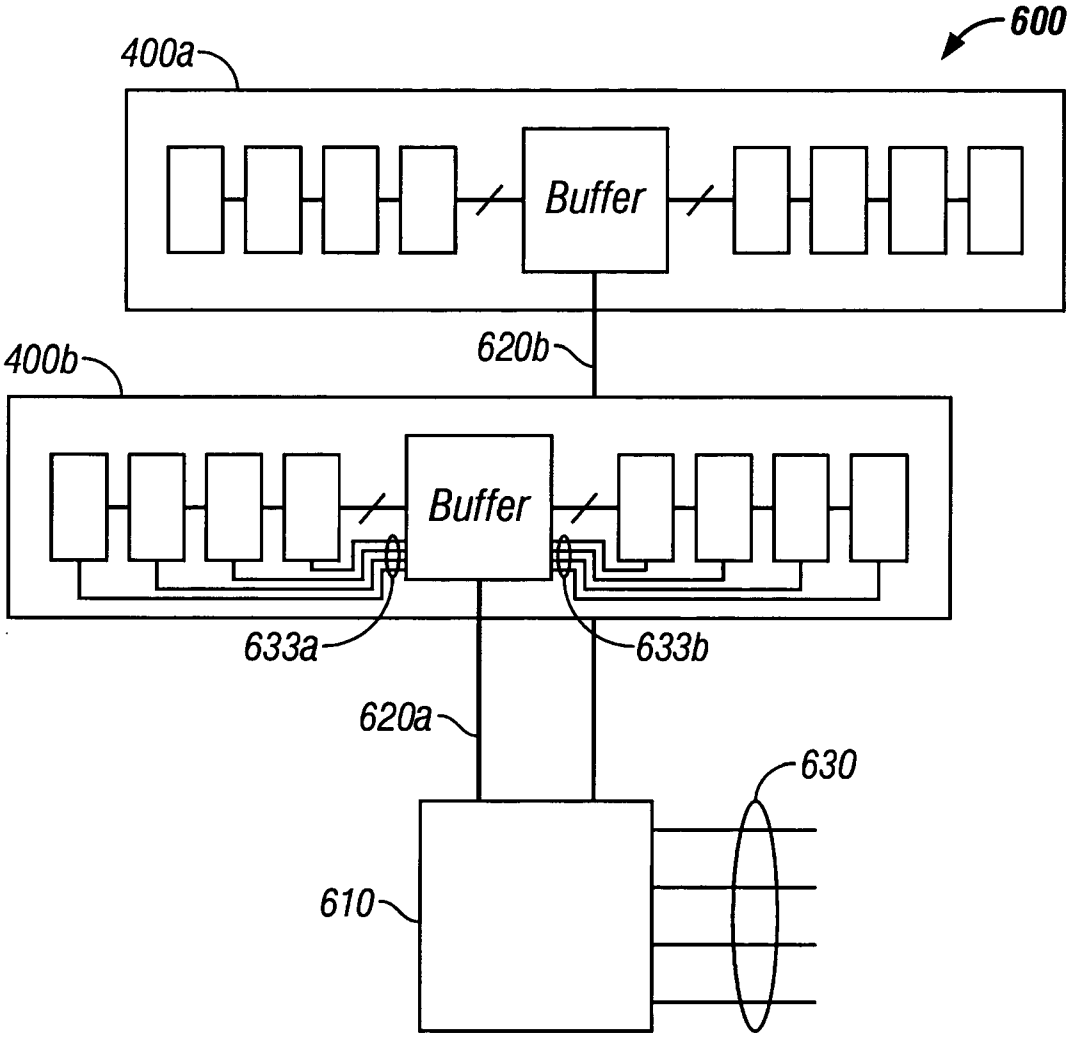

FIG. 6A

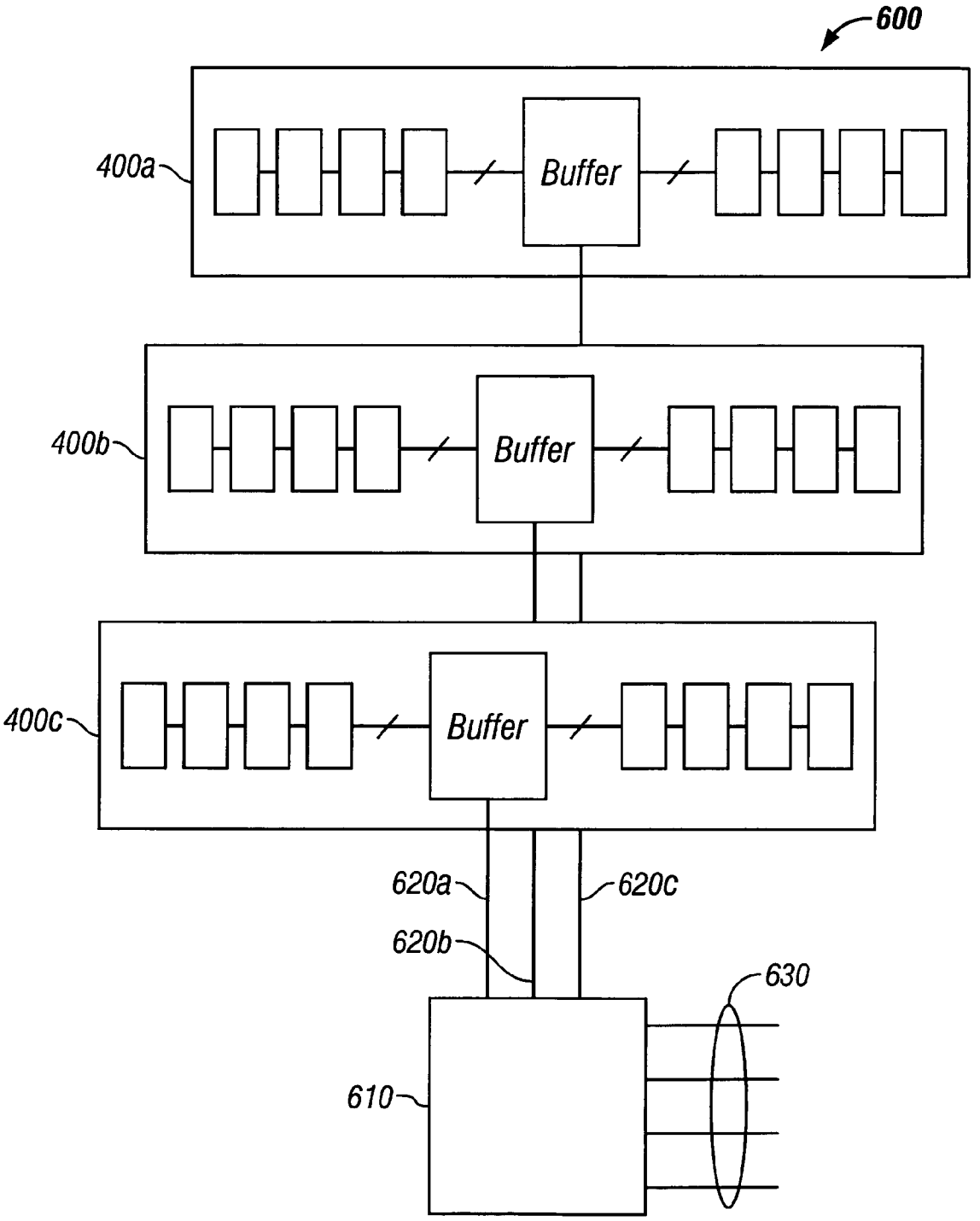
600
400a
Buffer
400b
Buffer
400c
Buffer
620a
620c
620b
630
610

FIG. 6B

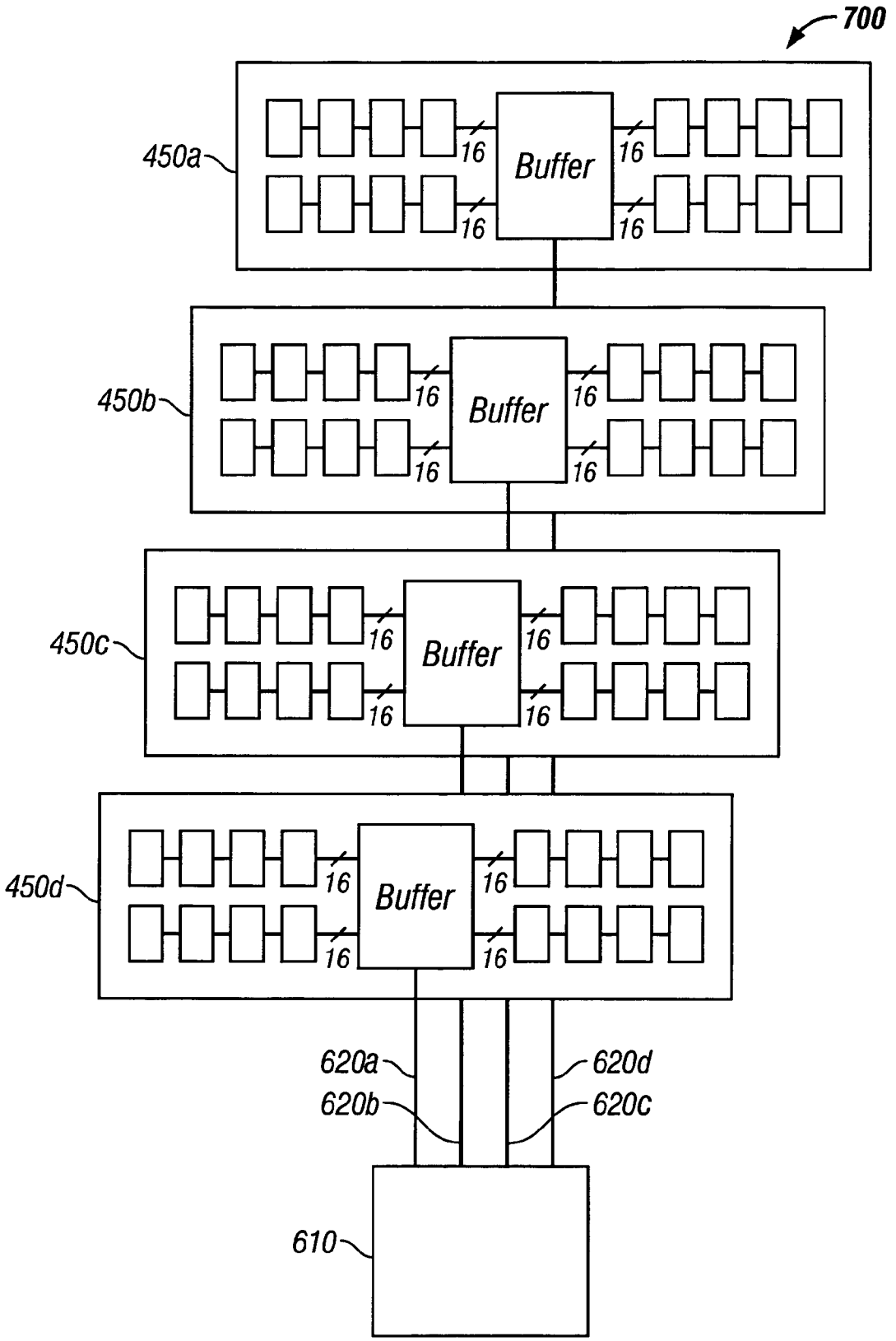

FIG. 7

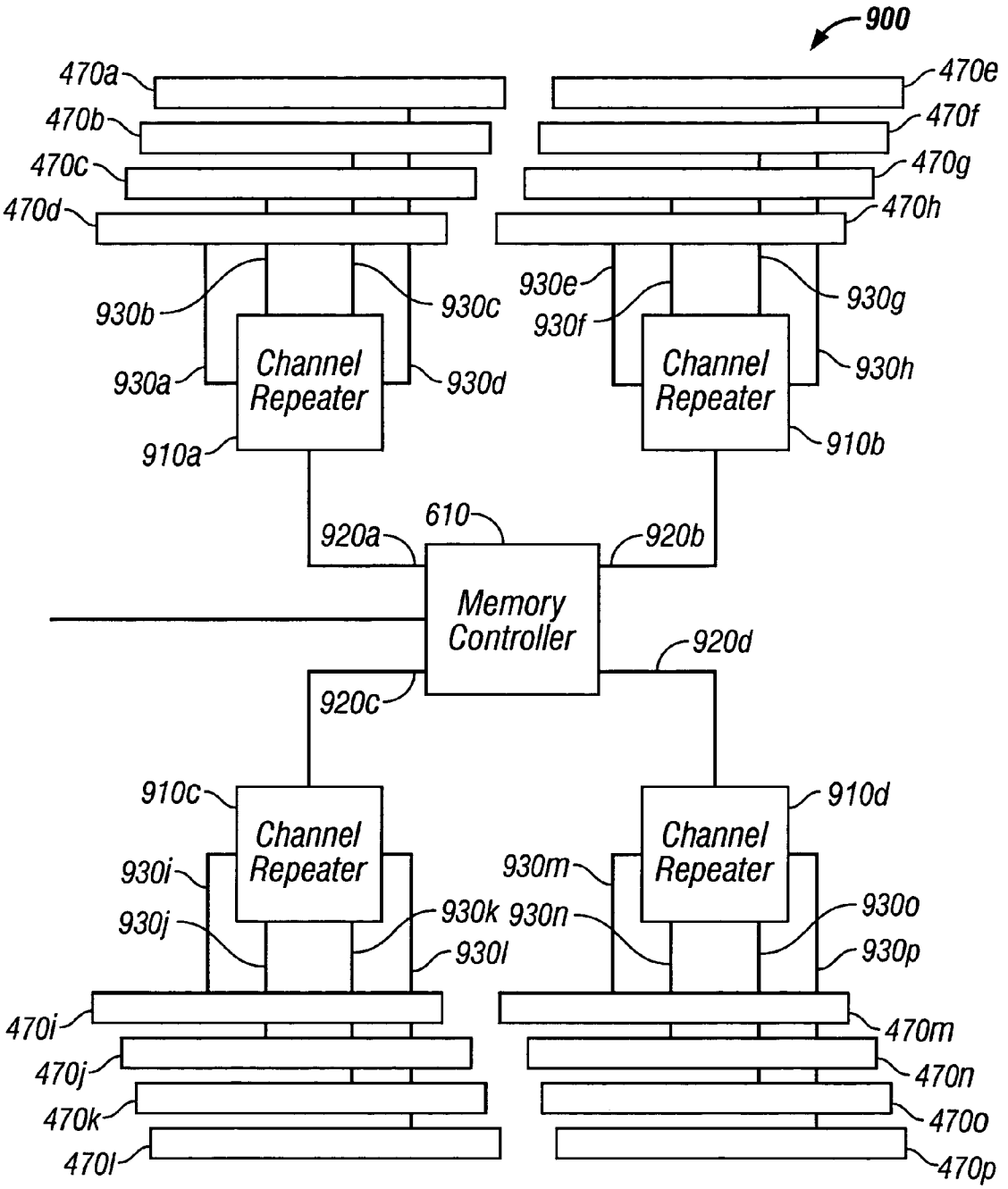
900
470a
470b
470c
470d
470e
470f
470g
470h
930b
930c
930a
930d
930e
930f
930g
930h
Channel Repeater
Channel Repeater
910a
910b
610
920a
920b
Memory Controller
920c
920d
910c
910d
Channel Repeater
Channel Repeater
930i
930j
930k
930l
930m
930n
930o
930p
470i
470j
470k
470l
470m
470n
470o
470p

FIG. 8A

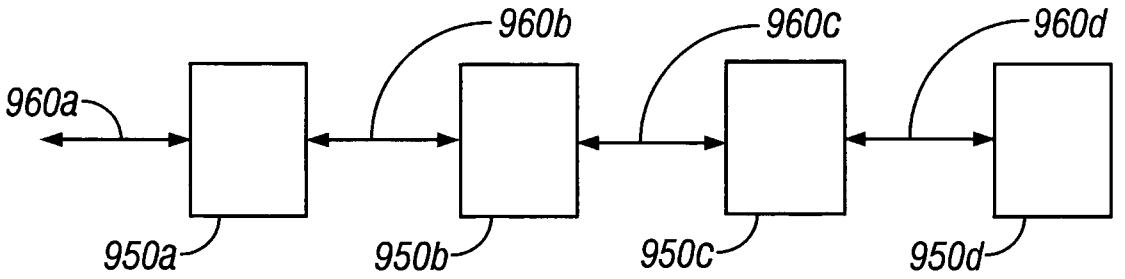

FIG. 8B

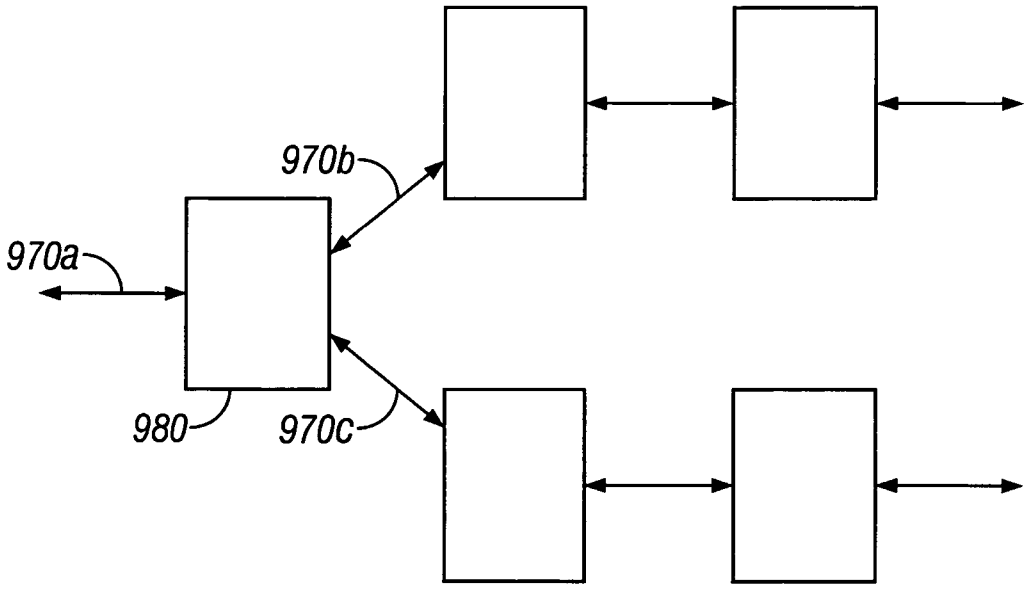

FIG. 8C

CONFIGURABLE WIDTH BUFFERED MODULE

This application is a continuation-in-part of U.S. patent application Ser. No. 10/272,024 filed on Oct. 15, 2002 (still pending); which is a continuation of U.S. patent application Ser. No. 09/479,375 filed on Jan. 5, 2000 (now U.S. Pat. No. 6,502,161).

BACKGROUND OF THE INVENTION

This invention relates to memory systems, memory subsystems, memory modules or a system having memory devices. More specifically, this invention is directed toward memory system architectures that may include integrated circuit devices such as one or more controllers and a plurality of memory devices.

Some contemporary memory system architectures may demonstrate tradeoffs between cost, performance and the ability to upgrade, for example; the total memory capacity of the system. Memory capacity is commonly upgraded via memory modules or cards featuring a connector/socket interface. Often these memory modules are connected to a bus disposed on a backplane to utilize system resources efficiently. System resources include integrated circuit die area, package pins, signal line traces, connectors, backplane board area, just to name a few. In addition to upgradeability, many of these contemporary memory systems also require high throughput for bandwidth intensive applications, such as graphics.

With reference to FIG. **1**, a representational block diagram of a conventional memory system employing memory modules is illustrated. Memory system **100** includes memory controller **110** and modules **120***a*–**120***c*. Memory controller **110** is coupled to modules **120***a*–**120***c* via control/address bus **130**, data bus **140**, and corresponding module control lines **150***a*–**150***c*. Control/address bus **130** typically comprises a plurality of address lines and control signals (e.g., RAS, CAS and WE).

The address lines and control signals of control/address bus **130** are bussed and "shared" between each of modules **120***a*–**120***c* to provide row/column addressing and read/write, precharge, refresh commands, etc., to memory devices on a selected one of modules **120***a*–**120***c*. Individual module control lines **150***a*–**150***c* are typically dedicated to a corresponding one of modules **120***a*–**120***c* to select which of modules **120***a*–**120***c* may utilize the control/address bus **130** and data bus **140** in a memory operation.

Here and in the detailed description to follow, "bus" denotes a plurality of signal lines, each having one or more connection points for "transceiving" (i.e., transmitting or receiving). Each connection point connects or couples to a transceiver (i.e., a transmitter-receiver) or one of a single transmitter or receiver circuit. A connection or coupling is provided electrically, optically, magnetically, by way of quantum entanglement or equivalently thereof.

With further reference to FIG. **1**, memory system **100** may provide an upgrade path through the usage of modules **120***a*–**120***c*. A socket and connector interface may be employed which allows each module to be removed and replaced by a memory module that is faster or includes a higher capacity. Memory system **100** may be configured with unpopulated sockets or less than a full capacity of modules (i.e., empty sockets/connectors) and provided for increased capacity at a later time with memory expansion modules. Since providing a separate group of signals (e.g., address lines and data lines) to each module is avoided using the bussed approach, system resources in memory system **100** are efficiently utilized.

U.S. Pat. No. 5,513,135 discloses a contemporary dual inline memory module (DIMM) having one or more discrete buffer devices.

Examples of contemporary memory systems employing buffered modules are illustrated in FIGS. **2**A and **2**B. FIG. **2**A illustrates a memory system **200** based on a Rambus® channel architecture and FIG. **2**B illustrates a memory system **210** based on a Synchronous Link architecture. Both of these systems feature memory modules having buffer devices **250** disposed along multiple transmit/receive connection points of bus **260**.

In an upgradeable memory system, such as conventional memory system **100**, different memory capacity configurations become possible. Each different memory capacity configuration may present different electrical characteristics to the control/address bus **130**. For example, load capacitance along each signal line of the control/address bus **130** may change with two different module capacity configurations. However, using conventional signaling schemes, the bussed approaches lend efficiency towards resource utilization of a system and permits module interfacing for upgradeability.

There is a need for memory system architectures or interconnect topologies that provide flexible and cost effective upgrade capabilities while providing high bandwidth to keep pace with microprocessor operating frequencies.

BRIEF DESCRIPTION OF THE DRAWINGS

In the course of the detailed description to follow, reference will be made to the attached drawings, in which:

FIG. **1** illustrates a representational block diagram of a conventional memory system employing memory modules;

FIGS. **2**A and **2**B illustrate contemporary memory systems employing buffered modules;

FIGS. **3**A and **3**B illustrate a block diagram representing memory systems according to embodiments of the present invention;

FIG. **3**C illustrates a block diagram representing a memory module that includes a configurable width buffer device according to an embodiment of the present invention;

FIGS. **4**A, **4**B, and **4**C illustrate buffered memory modules according to embodiments of the present invention;

FIG. **5**A illustrates a block diagram of a buffer device according to another embodiment of the present invention;

FIG. **5**B illustrates a block diagram of a configurable width buffer device according to an embodiment of the present invention;

FIG. **5**C illustrates a block diagram showing multiplexing and demultiplexing logic used in a configurable width interface of a buffer device shown in FIG. **5**B according to an embodiment of the present invention;

FIG. **5**D is a table showing control input states to achieve specified data widths in the configurable width buffer device shown in FIG. **5**B;

FIGS. **5**E and **5**F illustrate configurable width buffered modules including a configurable width buffer device coupled to memory devices according to an embodiment of the present invention;

FIGS. **6**A and **6**B illustrate block diagrams of a memory system according to other embodiments of the present invention;

FIG. **7** illustrates a block diagram of a memory system employing a buffered quad-channel module according to an embodiment of the present invention;

FIG. **8**A illustrates a block diagram of a large capacity memory system according to another embodiment of the present invention; and

FIGS. **8**B and **8**C illustrate another approach utilized to expand the memory capacity of a memory system in accordance to yet another embodiment of the present invention.

DETAILED DESCRIPTION

The present invention relates to a memory system which includes one or more semiconductor memory devices coupled to a buffer device. The buffer device may be disposed on a memory module, housed in a common package along with memory devices, or situated on a motherboard, for example, main memory in a personal computer or server. The buffer device may also be employed in an embedded memory subsystem, for example such as one found on a computer graphics card, video game console or a printer.

In several embodiments, the buffer device provides for flexible system configurations, and several performance benefits. For example, the buffer device may be a configurable width buffer device to provide upgrade flexibility and/or provide high bandwidth among a variety of possible module configurations in the system. A plurality of buffer devices, configurable or otherwise, may be utilized in the memory system to provide high capacity, without compromising performance. A buffer device having configurable width functionality may be employed to allow memory subsystem bandwidth to scale as the system is upgraded or to allow theoretical maximum memory subsystem bandwidth to be achieved among possible memory module configurations. As specified herein, "configurable width" is used to denote that interfacing to the buffer device may be configured in a flexible manner, for example, by configuring how many parallel bits of data may be transferred with the buffer device.

In several embodiments, one or more busses or a plurality of point-to-point links may be used to couple one or more buffer devices to a master (e.g., a controller or microprocessor device). A dynamic point-to-point link topology or any combination of point-to-point links or busses may be used to interface the master device and a corresponding buffer device.

In a specific embodiment, at least one point-to-point link connects at least one memory subsystem to the master, (e.g., a processor or controller). The memory system may be upgraded by coupling memory subsystems to the master via respective dedicated point-to-point links. Each memory subsystem includes a buffer device (e.g., a configurable width buffer device) that communicates to a plurality of memory devices. The master communicates with each buffer device via each point-to-point link. The buffer device may be disposed on a memory module along with the plurality of memory devices and connected to the point-to-point link via a connector. Alternatively, the buffer device may be disposed on a common printed circuit board or backplane link along with the corresponding point-to-point link and master.

"Memory devices" are a common class of integrated circuit devices that have a plurality of storage cells, collectively referred to as a memory array. A memory device stores data (which may be retrieved) associated with a particular address provided, for example, as part of a write or read command. Examples of types of memory devices include dynamic random access memory (DRAM), static random access memory (SRAM), and double data rate SDRAM (DDR). A memory device typically includes request decode and array access logic that, among other functions, decodes request and address information, and controls memory transfers between a memory array and routing path. A memory device includes a transceiver for transmitting and receiving data in an embodiment of the present invention. A transceiver includes a transmitter circuit to output data synchronously with respect to rising and falling edges of a clock signal as well as a receiver circuit in an embodiment of the present invention.

A "memory subsystem" is a plurality of memory devices, which may be interconnected with an integrated circuit device (e.g., a buffer device) providing access between the memory devices and an overall system, for example, a computer system. It should be noted that a memory system is distinct from a memory subsystem in that a memory system may include one or more memory subsystems. A "memory module" or simply just "module" denotes a substrate package housing or structure having a plurality of memory devices employed with a connector interface. For example, a memory module may be included in a single unitary package, as in a "system in package" ("SIP") approach. In one type of SIP approach, the module may include a series of integrated circuit dies (i.e., memory devices and buffer device) stacked on top of one another and coupled via conductive interconnect. Solder balls or wire leads may be employed as the connector interface such that the module may be fixedly attached to a printed circuit board substrate. The connector interface may also be of a physically separable type that includes, for example, male and female portions such that the module is detachable from the rest of the system. Another SIP approach may include a number of memory devices and buffer device disposed, in a two dimensional arrangement, on a common substrate plane and situated inside a single package housing.

It follows from these definitions that a memory module having a buffer device (e.g., having a configurable width) isolating data, control, and address signals of the memory devices from the connector interface may be a memory subsystem. As referred to herein, the term "buffer device" may be interchangeable with "configurable width buffer device", although this does not expressly imply that a "buffer device" must have a "configurable width" feature.

A connector interface as described herein, such as a memory module connector interface, is not limited to physically separable interfaces where a male connector or interface engages a female connector or interface. A connector interface also includes any type of physical interface or connection, such as an interface used in a SIP where leads, solder balls or connections from a memory module are soldered to a circuit board. For example, in the stacked die approach, a number of integrated circuit die (i.e., memory devices and buffer device) may be stacked on top of one another with a substrate forming the base and interface to a memory controller or processor via a ball grid array type of connector interface. As another example, the memory devices and buffer device may be interconnected via a flexible tape interconnect and interface to a memory controller via one of a ball grid array type connector interface or a physically separable socket type connector interface.

With reference to FIGS. **3**A and **3**B, block diagrams of a memory system according to embodiments of the present invention are illustrated. Memory systems **300** and **305** include a controller **310**, a plurality of point-to-point links **320***a*–**320***n*, and a plurality of memory subsystems

330*a*–330*n*. For simplicity, a more detailed embodiment of memory subsystem 330*a* is illustrated as memory subsystem 340. Buffer device 350 and a plurality of memory devices 360 are disposed on memory subsystem 340. Buffer device 350 is coupled to the plurality of memory devices 360 via channels 370. Interface 375 disposed on controller 310 includes a plurality of memory subsystem ports 378*a*–378*n*. A "port" is a portion of an interface that serves a congruent I/O functionality. The memory subsystem ports 378*a*–378*n* may be included as a portion of a configurable width interface, for example as is described in some of the embodiments below.) One of memory subsystem ports 378*a*–378*n* includes I/Os, for sending and receiving data, addressing and control information over one of point-to-point links 320*a*–320*n*.

According to an embodiment of the present invention, at least one memory subsystem is connected to one memory subsystem port via one point-to-point link. The memory subsystem port is disposed on the memory controller interface, which includes a plurality of memory subsystem ports, each having a connection to a point-to-point link. In other embodiments, memory subsystems are connected to a memory subsystem port via a bus (i.e., a plurality of signal lines). A combination of bus and point-to-point connections may be used to connect the memory subsystem ports to each memory subsystem, for example, point-to-point links may be employed to transport data between the memory subsystem ports and each memory subsystem, and one or more busses may be used to transport control and/or addressing information between the memory subsystem ports and each memory subsystem.

A dynamic point-to-point topology may also be employed to connect the memory subsystem port to each of the memory subsystems. A dynamic point-to-point topology includes a first plurality of point-to-point connections between the memory controller and a first memory module and a second plurality of point-to-point connections between the memory controller and the second memory module in a first configuration. For example, when the second memory module is removed from the system and a second configuration is desired, the plurality of point-to-point connections are routed to the first memory module to retain system bandwidth between memory modules and the controller or increase the bandwidth to the first memory module. The routing may be performed in a number of ways including using a continuity module or switches. In an embodiment, a configurable width buffer device disposed on the first memory module provides the flexibility to configure the width of the first memory module to accept switch between the first and second configurations. That is the configurable width buffer device may provide the flexibility to configure the module to connect to the first plurality of point-to-point connections in the first configuration and to connect to the second plurality of point-to-point links in the second configuration.

In FIG. 3A, point-to-point links 320*a*–320*n*, memory subsystems 330*a*–330*c* (including mating connectors 380*a*–*n*), and controller 310, are incorporated on a common substrate (not shown) such as a wafer or a printed circuit board (PCB) in memory system 300. In an alternate embodiment, memory subsystems are incorporated onto individual substrates (e.g., PCBs). The memory subsystems are then fixedly attached to a single substrate that incorporates point-to-point links 320*a*–320*n* and controller 310. In another alternate embodiment illustrated in FIG. 3B, memory subsystems 330*a*–330*c* are incorporated onto individual substrates that include connectors 390*a*–390*c* to support upgradeability in memory system 305. Corresponding mating connectors 380*a*–380*n* are connected to a connection point of each point-to-point link 320*a*–320*n*. Each of mating connectors 380*a*–380*n* interface with connectors 390*a*–390*c* to allow removal/inclusion of memory subsystems 330*a*–330*c* in memory system 305. In one embodiment, mating connectors 380*a*–380*n* are sockets and connectors 390*a*–390*c* are edge connectors disposed on an edge of each memory subsystems 330*a*–330*c*. Mating connectors 380*a*–380*n*, are attached to a common substrate shared with point-to-point links 320*a*–320*n* and controller 310.

With further reference to FIGS. 3A and 3B, buffer device 350 transceives and provides isolation between signals interfacing to controller 310 and signals interfacing to the plurality of memory devices 360. In a normal memory read operation, buffer device 350 receives control, and address information from controller 310 via point-to-point link 320*a* and in response, transmits corresponding signals to one or more, or all of memory devices 360 via channels 370. One or more of memory devices 360 may respond by transmitting data to Buffer device 350 which receives the data via one or more of channels 370 and in response, transmits corresponding signals to controller 310 via point-to-point link 320*a*. Controller 310 receives the signals corresponding to the data at corresponding ports 378*a*–378*n*. In this embodiment, memory subsystems 330*a*–330*n* are buffered modules. By way of comparison, buffers disposed on the conventional DIMM module in U.S. Pat. No. 5,513,135 are employed to buffer or register control signals such as RAS, and CAS, etc., and address signals. Data I/Os of the memory devices disposed on the DIMM are connected directly to the DIMM connector (and ultimately to data lines on an external bus when the DIMM is employed in memory system 100).

Buffer device 350 provides a high degree of system flexibility. New generations of memory devices may be phased in with controller 310 or into memory system 300 by modifying buffer device 350. Backward compatibility with existing generations of memory devices (i.e., memory devices 360) may also be preserved. Similarly, new generations of controllers may be phased in which exploit features of new generations of memory devices while retaining backward compatibility with existing generations of memory devices.

Buffer device 350 effectively reduces the number of loading permutations on the corresponding point-to-point link to one, thus simplifying test procedures. For example, characterization of a point-to-point link may involve aspects such as transmitters and receivers at opposite ends, few to no impedance discontinuities, and relatively short interconnects. By way of contrast, characterization of control/address bus 130 (see FIG. 1) may involve aspects such as multiple transmit and receive points, long stub lines, and multiple load configurations, to name a few. Thus, the increased number of electrical permutations tends to add more complexity to the design, test, verification and validation of memory system 100.

With further reference to FIG. 3B an exemplary system that uses configurable width modules coupled in a dynamic point-to-point configuration may be described. In this exemplary embodiment, each of memory subsystems 330*a*–330*c* is a buffered memory module having a configurable width interface. In this embodiment, system capacity may scale without compromising performance when memory modules are added to the system to increase total memory capacity. For example, memory system may be populated with a single buffered memory module located, for example in mating connector 380a (e.g., a socket connector), thus

leaving point-to-point links **320***b*–**320***n* coupled to unpopulated mating connectors **380***b*–**380***n*. In this configuration, point-to-point links **320***b*–**320***n* may be routed to access the single buffered memory module located in mating connector **380***a* and routed using electrical or mechanical switches. The single buffered memory module located in mating connector **380***a* is programmed to include an interface width that may accommodate the routed point-to-point links **320***b*–**320***n*. U.S. patent application Ser. No. 09/797,099, ("the Upgradeable Application") entitled "Upgradeable Memory System with Reconfigurable Interconnect," filed on Feb. 28, 2001, Attorney Docket No. RB1-017US which application is incorporated by reference herein and which application is assigned to the owner of the present application, describes a configurable memory module that is used in embodiments of the present invention to provide a dynamic point-to-point configuration. In particular, the configurable memory module taught by the Upgradeable Application is used with a configurable buffer device **391**, as described below, in embodiments of the present invention. In a point-to-point system, the minimum number of links per memory module is limited by the number of memory devices in a memory module that does not include a buffer device, but can be as low as one link for a memory module having a configurable width buffer device **391**. Because memory modules having configurable width buffer devices allow for fewer links per memory module, more memory modules can be supported for a particular number of links from a master device.

FIG. **3**C shows an example of a configurable width buffered module **395** that can be used in conjunction with the system described above. Configurable width buffered module **395** includes memory devices **360**, channels **370**, configurable width buffer device **391** and connector **390**. Configurable width buffered module **395** is configurable or programmable such that information may be transferred using different numbers of interface connections **390***a* in connector **390** provided by configurable width buffer device **391**. In an embodiment of the present invention, interface connections **390***a* includes a plurality of contacts, conducting elements or pins. In an embodiment illustrated by FIG. **3**C, there are four possible configurations for configurable width buffer device **391**. As used in the circuit described above, however, each module will be configured in one of two ways: (a) to use its full set of available interface connections **390***a*, or (b) to use only a limited subset (half in the described example) of its interface connections **390***a*.

In the following discussion, the modules' alternative configurations, and in particular the configurable width buffer device **391** alternate configurations, are referred to as having or using different "widths". However, it should be noted that the capacities of the memory modules may or may not change with the different data widths, at least in an embodiment of the present invention. A module's full set of data stored on the associated memory devices is available regardless of the buffer interface width being used. With wider interface widths, different subsets of memory devices and memory cells may be accessed through different sets of interface connections. With narrower data or interface widths, the different subsets of memory devices and memory cells are accessed through a common set of interface connections. At such narrower interface widths, larger addressing ranges may be used to access data from one or more of the memory devices.

Configurable width buffered module **395** includes at least one memory device **360***a*, of memory devices **360**, that receive and transmit data bit signals through channels **370** (e.g., a plurality of signal lines). In the described embodiment, memory devices **360** are discretely packaged Synchronous type DRAM integrated circuits (ICs), for example, DDR memory devices, Direct Rambus® memory devices (DRDRAM), or "XDR™" memory devices, although the memory devices might be any of a number of other types, including but not limited to SRAM, FRAM (Ferroelectric RAM), MRAM (Magnetoresistive or Magnetic RAM), Flash, or ROM. singly or in combination.

In the embodiment illustrated in FIG. **3**A, buffered modules added to upgrade memory system **300** (e.g., increase memory capacity) are accommodated by independent point-to-point links. Relative to a bussed approach, system level design, verification and validation considerations are reduced, due to the decreased amount of module interdependence provided by the independent point-to-point links. Additionally, the implementation, verification and validation of buffered modules may be performed with less reliance on system level environment factors.

Several embodiments of point-to-point links **320***a*–**320***n* include a plurality of link architectures, signaling options, clocking options and interconnect types. Embodiments having different link architectures include simultaneous bidirectional links, time-multiplexed bidirectional links and multiple unidirectional links. Voltage or current mode signaling may be employed in any of these link architectures.

Clocking methods employed in the synchronization of events in point-to-point link or bussed topologies include any of globally synchronous clocking (i.e., where a single clock frequency source is distributed to various devices in the system); source synchronous clocking (i.e., where data is transported alongside the clock from the source to destination such that the clock and data become skew tolerant) and encoding the data and the clock together. In one embodiment, differential signaling is employed and is transported over differential pair lines. In alternate embodiments, one or more common voltage or current references are employed with respective one or more current/voltage mode level signaling. In yet other embodiments, multi-level signaling-where information is transferred using symbols formed from multiple signal (i.e., voltage/current) levels is employed.

Signaling over point-to-point links **320***a*–**320***n* or alternatively, over bussed topologies, may incorporate different modulation methods such as non-return to zero (NRZ), multi-level pulse amplitude modulation (PAM), phase shift keying, delay or time modulation, quadrature amplitude modulation (QAM) and Trellis coding. Other signaling methods and apparatus may be employed in point-to-point links **320***a*–**320***n*, for example, optical fiber based apparatus and methods.

The term "point-to-point link" denotes one or a plurality of signal lines, each signal line having only two transceiver connection points, each transceiver connection point coupled to transmitter circuit, receiver circuit or transceiver circuit. For example, a point-to-point link may include a transmitter coupled at or near one end and a receiver coupled at or near the other end. The point-to-point link may be synonymous and interchangeable with a point-to-point connection or a point-to-point coupling.

In keeping with the above description, the number of transceiver points along a signal line distinguishes between a point-to-point link and a bus. According to the above, the point-to-point link consists of two transceiver connection points while a bus consists of more than two transceiver points.

One or more terminators (e.g., a resistive element) may terminate each signal line in point-to-point links **320***a*–**320***n*.

In several embodiments of the present invention, the terminators are connected to the point-to-point link and situated on buffer device **350**, on a memory module substrate and optionally on controller **310** at memory subsystem ports **378***a*–**378***n*. The terminator(s) connect to a termination voltage, such as ground or a reference voltage. The terminator may be matched to the impedance of each transmission line in point-to-point links **320***a*–**320***n*, to help reduce voltage reflections. Signal lines of bussed topologies may also benefit from terminating end points or connection points where devices, such as buffer devices connect to those signal lines.

In an embodiment of the present invention employing multi-level PAM signaling, the data rate may be increased without increasing either the system clock frequency or the number of signal lines by employing multiple voltage levels to encode unique sets of consecutive digital values or symbols. That is, each unique combination of consecutive digital symbols may be assigned to a unique voltage level, or pattern of voltage levels. For example, a 4-level PAM scheme may employ four distinct voltage ranges to distinguish between a pair of consecutive digital values or symbols such as 00, 01, 10 and 11. Here, each voltage range would correspond to one of the unique pairs of consecutive symbols.

With reference to FIGS. **4**A, **4**B and **4**C, buffered memory modules according to embodiments of the present invention are shown. Modules **400** and **450** include buffer device **405** and a plurality of memory devices **410***a*–**410***h* communicating over a pair of channels **415***a* and **415***b*. In these embodiments channel **415***a* communicates to memory devices **410***a*–**410***d* and channel **415***b* communicates to memory devices **410***e*–**410***h*.

In an embodiment, channels **415***a* and **415***b* consist of a plurality of signal lines in a relatively short multi-drop bus implementation. The plurality of signal lines may be controlled impedance transmission lines that are terminated using respective termination elements **420***a* and **420***b*. Channels **415***a* and **415***b* are relatively short (i.e., are coupled to relatively few memory devices relative to a conventional memory system, for example see FIGS. **2**A and **2**B) and connect to an I/O interface (not shown) of each memory device via a short stub. Signal lines of channels **415***a* and **415***b* include control lines (RQ), data lines (DQ) and clock lines (CFM, CTM). The varieties of interconnect topologies, interconnect types, clocking methods, signaling references, signaling methods, and signaling apparatus described above in reference to point-to-point links **320***a*–**320***n* may equally apply to channels **415***a* and **415***b*.

In accordance with an embodiment of the present invention, control lines (RQ) transport control (e.g., read, write, precharge . . .) information and address (e.g., row and column) information contained in packets. By bundling control and address information in packets, protocols required to communicate to memory devices **410***a*–**410***h* are independent of the physical control/address interface implementation.

In alternate embodiments, control lines (RQ) may comprise individual control lines, for example, row address strobe, column address strobe, etc., and address lines. Individual point-to-point control and address lines increase the number of parallel signal connection paths, thereby increasing system layout resource requirements with respect to a narrow "packet protocol" approach. In one alternate embodiment illustrated in FIG. **6**A, individual device select lines **633***a* and **633***b* are employed to perform device selection. Individual device select lines **633***a* and **633***b* decrease some latency consumed by decoding device identification that normally is utilized when multiple devices share the same channel and incorporate individual device identification values.

Clock lines of channels **415***a* and **415***b* include a terminated clock-to-master (CTM) (i.e., clock to buffer) and clock-from-master (CFM) (i.e., clock from buffer) line. In a source synchronous clocking method, CTM may be transition or edge aligned with control and/or data communicated to buffer device **405** from one or more of memory devices **410***a*–**410***d* in, for example, a read operation. CFM may be aligned with or used to synchronize control and/or data from the buffer to memory in, for example, a write operation.

Although two channels **415***a* and **415***b* are shown in FIG. **4**A, a single channel is also feasible. In other embodiments, more than two channels may be incorporated onto module **400**. It is conceivable that if each channel and memory device interface is made narrow enough, then a dedicated channel between each memory device and the buffer device may be implemented on the module. The width of the channel refers to the number of parallel signal paths included in each channel. FIG. **4**B illustrates a quad-channel module **450** having channels **415***a*–**415***d*. In this embodiment, channels **415***c* and **415***d* are routed in parallel with channels **415***a* and **415***b* to support more memory devices (e.g., 32 memory devices). By incorporating more channels and additional memory devices, module **450** (FIG. **4**B) may be implemented in memory systems that require large memory capacity, for example, in server or workstation class systems.

In alternate embodiments, channels **415***a* and **415***b* may operate simultaneously with channels **415***c* and **415***d* to realize greater bandwidth. By operating a plurality of channels in parallel, the bandwidth of the module may be increased independently of the memory capacity. The advantages of greater bandwidth may be realized in conjunction with larger capacity as more modules incorporated by the memory system **305** (see FIG. **3**B) increase the system memory capacity. In other alternate embodiments, the modules are double sided and channels along with corresponding pluralities of memory devices are implemented on both sides. Using both sides of the module increases capacity or increases bandwidth without impacting module height. Both capacity and bandwidth may increase using this approach. Indeed, these techniques may increase capacity and bandwidth singly or in combination.

Other features may also be incorporated to enhance module **400** in high capacity memory systems, for example, additional memory devices and interface signals for error correction code storage and transport (ECC). Referring to FIG. **4**C, memory devices **410**i and **410**r intended for ECC are disposed on module **470**.

In one embodiment, memory devices **410***a*–**410***h* are Rambus® Dynamic Random access Memory (RDRAM) devices operating at a data rate of 1066 Mbits/sec. Other memory devices may be implemented on module **400**, for example, Double Data Rate 2 (DDR2) DRAM devices and Synchronous DRAM (SDRAM) devices. Utilizing buffer device **405** between the memory devices and controller in accordance with the present invention (e.g., see FIG. **3**) may feasibly render the type of memory device transparent to the system. Different types of memory devices may be included on different modules within a memory system, by employing buffer device **405** to translate protocols employed by controller **310** to the protocol utilized in a particular memory device implementation.

With reference to FIG. **5**A, a block diagram of a buffer device according to an embodiment of the present invention is illustrated. Buffer device **405** includes interface **510**, interfaces **520***a* and **520***b*, multiplexers **530***a* and **530***b*, request & address logic **540**, write buffer **550**, optional cache **560**, computation block **565**, clock circuit **570***a–b* and operations circuit **572**.

In an embodiment, interface **510** couples to external point-to-point link **320** (e.g., point-to-point links **320***a*–**320***n* in FIGS. **3**A and **3**B). Interface **510** includes a port having transceiver **575** (i.e. transmit and receive circuit) that connects to a point-to-point link. Point-to-point link **320** comprises one or a plurality of signal lines, each signal line having no more than two transceiver connection points. One of the two transceiver connection points is included on interface **510**. Buffer device **405** may include additional ports to couple additional point-to-point links between buffer device **405** and other buffer devices on other memory modules. These additional ports may be employed to expand memory capacity as is described in more detail below. Buffer device **405** may function as a transceiver between point-to-point link **320** and other point-to-point links. FIGS. **8**B and **8**C illustrate some buffer-to-buffer connection topology embodiments, while one of ordinary skill in the art would appreciate that there many more embodiments.

In one embodiment, termination **580** is disposed on buffer device **405** and is connected to transceiver **575** and point-to-point link **320**. In this embodiment, transceiver **575** includes an output driver and a receiver. Termination **580** may dissipate signal energy reflected (i.e., a voltage reflection) from transceiver **575**. Termination **580** may be a resistor or capacitor or inductor, singly or a series/parallel combination thereof. In alternate embodiments, termination **580** may be external to buffer device **405**. For example, termination **580** may be disposed on a module substrate or on a memory system substrate.

In another approach, signal energy reflected from transceiver **575** may be utilized in a constructive manner according to an embodiment. By correctly placing a receive point spaced by a distance from the end of point-to-point link **320**, a reflected waveform is summed with an incident waveform to achieve a greater signal amplitude. In this approach, layout space may be saved by eliminating termination **580**. System power may also be saved using this approach since smaller incident voltage amplitude waveforms may be employed. This approach may be equally applicable to the transceiver end of the point-to-point link, or to channels **415***a* and **415***b* (see FIGS. **4**A to **4**C). With further reference to FIG. **5**A, interfaces **520***a* and **520***b* receive and transmit to memory devices disposed on the module (e.g., see FIGS. **4**A, **4**B and **4**C) via channels. Ports included on interfaces **520***a* and **520***b* connect to each channel. In alternate embodiments of the present invention, interfaces **520***a* and **520***b* include any number of channels e.g., two, four, eight or more channels.

According to an embodiment of the present invention, multiplexers **530***a* and **530***b* perform bandwidth-concentrating operations, between interface **510** and interfaces **520***a* and **520***b*, as well as route data from an appropriate source (i.e. target a subset of channels, internal data, cache or write buffer). The concept of bandwidth concentration involves combining the (smaller) bandwidth of each channel in a multiple channel embodiment to match the (higher) overall bandwidth utilized in a smaller group of channels. This approach typically utilizes multiplexing and demultiplexing of throughput between the multiple channels and smaller group of channels. In an embodiment, buffer device **405** utilizes the combined bandwidth of interfaces **520***a* and **520***b* to match the bandwidth of interface **510**. Bandwidth concentration is described in more detail below.

Cache **560** is one performance enhancing feature that may be incorporated onto buffer device **405**. Employing a cache **560** may improve memory access time by providing storage of most frequently referenced data and associated tag addresses with lower access latency characteristics than those of the memory devices. Computation block **565** may include a processor or controller unit, a compression/decompression engine, etc, to further enhance the performance and/or functionality of the buffer device. In an embodiment, write buffer **550** may improve interfacing efficiency by utilizing available data transport windows over point-to-point link **320** to receive write data and optional address/mask information. Once received, this information is temporarily stored in write buffer **550** until it is ready to be transferred to at least one memory device over interfaces **520***a* and **520***b*.

A serial interface **574** may be employed to couple signals utilized in initialization of module or memory device identification values, test function, set/reset, access latency values, vendor specific functions or calibration. Operations circuit **572** may include registers or a read-only memory (ROM) to store special information (e.g., vendor, memory device parameter or configuration information) that may be used by the controller. Operations circuit may reduce costs by eliminating the need for separate devices on the module conventionally provided to perform these features (e.g., serial presence detect (SPD) employed in some conventional DIMM modules). An SPD device is a non-volatile memory device included on a memory module. The SPD stores information used by the remainder system to properly configure the memory devices upon boot of the system.

According to an embodiment of the present invention, sideband signals are employed to handle special functions such as reset, initialization and power management functions. In addition, sideband signals may be employed to configure the width of the buffer device. Sideband signals are connected via serial interface **574** and are independent from point-to-point link **320** for handling the special functions. In other embodiments sideband signals are independently coupled to memory devices **410***a*–**410***h* to directly promote initialization, reset, power-up or other functionality independently of buffer device **405**. Other interconnect topologies of sideband signals are possible. For example, sideband signals may be daisy chained between buffer devices and coupled to the memory controller or daisy chained between all memory devices to the memory controller. Alternatively, dedicated sideband signals may be employed throughout.

Clock circuit **570***a–b* may include clock generator circuit (e.g., Direct Rambus® Clock Generator), which may be incorporated onto buffer device **405** and thus may eliminate the need for a separate clock generating device. Here, module or system costs may be decreased since the need for a unique clock generator device on the module or in the system may be eliminated. Since reliability to provide adequate clocking on an external device is eliminated, complexity is reduced since the clock may be generated on the buffer device **405**. By way of comparison, some of the conventional DIMM modules require a phase lock loop (PLL) generator device to generate phase aligned clock signals for each memory device disposed on the module.

According to an embodiment of the present invention, clock circuit **570***a–b* includes one or more clock alignment circuits for phase or delay adjusting internal clock signals

with respect to an external clock (not shown). Clock alignment circuit may utilize an external clock from an existing clock generator, or an internal clock generator to provide an internal clock, to generate internal synchronizing clock signals having a predetermined temporal relationship.

FIG. **5**B illustrates a configurable width buffer device **391** as seen in FIG. **3**C in an embodiment of the present invention. Configurable width buffer device **391** includes like numbered components as shown in FIG. **5**A and, in an embodiment, may operate as described above. Configurable width buffer device **391** also includes configurable width interface **590**, state storage **576**, configurable serialization circuit **591** and interface **596**. In an embodiment, a plurality of contacts, solder balls or pins are included to provide electrical connections between interface **596** and connector **390** (FIG. **3**C) via signal line traces routed on or through out a substrate portion of the module.

Also, in an embodiment of the present invention, one or more transceiver **575** (FIG. **5**B) and termination **580** are associated with each port in interface **596**. In this specific embodiment, transceiver **575** includes a transmit circuit to transmit data onto a signal line (external to configurable width buffer device **391**) and a receiver circuit to receive a data signal on the same signal line. In an alternate embodiment, the transmit circuit is multiplexed with the data received by the receiver circuit. In still a further embodiment of the present invention, the transmit circuit transmits data and the receiver circuit receives data simultaneously.

In another embodiment, the transceiver **575** includes separate unidirectional transmit and receive circuits, each having dedicated resources for communicating data on and off configurable width buffer device **391**. In this embodiment, unidirectional transmitter circuit transmits data onto a first signal line disposed on (external to configurable width buffer device **391**, for example, disposed on configurable width buffered module **395**). In addition, unidirectional receiver circuit receives data from a second signal line.

In another embodiment of the present invention, a transmit circuit transmits a differential signal that includes encoded clock information and a receiver circuit receives a differential signal that includes encoded clock information. In this embodiment, clock and data recovery circuit is included to extract the clock information encoded with the data received by the receiver circuit. Furthermore, clock information is encoded with data transmitted by the transmit circuit. For example, clock information may be encoded onto a data signal, by ensuring that a minimum number of signal transitions occur in a given number of data bits.

In an embodiment of the present invention, any multiplexed combination of control, address information and data intended for memory devices coupled to configurable width buffer device **391** is received via configurable width interface **590**, which may, for example extract the address and control information from the data. For example, control information and address information may be decoded and separated from multiplexed data and provided on lines **595** to request & address logic **540** from interface **596**. The data may then be provided to configurable serialization circuit **591**.

Interfaces **520***a* and **520***b* include programmable features in embodiments of the present invention. A number of control lines between configurable width buffer device **391** and memory devices are programmable in order to accommodate different numbers of memory devices on a configurable width buffered module **395** in an embodiment of the present invention. Thus, more dedicated control lines are available with increased memory device memory module configuration. Using programmable dedicated control lines avoids any possible load issues that may occur when using a bus to transfer control signals between memory devices and a configurable width buffer device **391**. In another embodiment of the present invention, an additional complement data strobe signal for each byte of each memory device may be programmed at interfaces **520***a* and **520***b* to accommodate different types of memory devices on a configurable width memory module **395**, such as legacy memory devices that require such a signal. In still a further embodiment of the present invention, interfaces **520***a* and **520***b* are programmable to access different memory device widths. For example, interfaces **520***a* and **520***b* may be programmed to connect to 16"x4" width memory devices, 8"x8" width memory devices or 4"x16" width memory devices.

Configurable width buffer device **391** has a maximum buffer device interface width equivalent to the number of data pins or contacts provided on the buffer device's package or interface **596**. In an embodiment of the present invention, interface **596** includes 128 pins of which selectable subsets of 1, 2, 4, 8, 16, 32, 64 or all 128 pins (W_{DP}) may be used in order to configure the width of configurable width buffer device **391**. Configurable width buffer device **391** also has a maximum memory device access width defined as the largest number of bits that can be accessed in a single memory device transfer operation to or from configurable width buffer device **391**. Using the techniques described herein, the configurable width buffer device **391** may be programmed or configured to operate at interface widths and memory device access widths other than these maximum values.

In an embodiment illustrated by FIG. **5**B, a serialization ratio is defined as follows:

$$R_S = W_A : W_{DP}$$

Where:

R_S=Serialization Ratio

W_A=Memory Device Access Width

W_{DP}=Configured Buffer Device Interface Width

For example, if the memory device access width W_A is 128-bits and the configurable width buffer device interface width W_{DP} is 16-bits, the serialization ratio is 8:1. For the described embodiment, the serialization ratio remains constant for all configured buffer device interface widths, so that the memory device access width scales proportionally with configured buffer device interface width. In other embodiments, the serialization ratio could vary as the configured buffer device interface width varies. In other embodiments, the serialization ratio may change and the memory device access width may remain constant.

Configurable serialization circuit **591** performs serialization and deserialization functions depending upon the desired serialization ratio as defined above. As the memory device access width is reduced from its maximum value, memory device access granularity (measured in quanta of data) is commensurately reduced, and an access interleaving or multiplexing scheme may be employed to ensure that all storage locations within memory devices **360** can be accessed. The number of signal lines of channels **370** may be increased or decreased as the memory device access width changes. Channels **370** (FIG. **3**C) may be subdivided into several addressable subsets. The address of the transaction will determine which target subset of channels **370** will be utilized for the data transfer portion of the transaction. In addition, the number of transceiver circuits included in interface **520***a* and **520***b* that are employed to communicate

with one or more memory devices may be configured based on the desired serialization ratio. Typically, configuration of the transceivers may be effectuated by enabling or disabling how many transceivers are active in a given transfer between one or more memory devices and configurable width buffer device **391**.

In an embodiment of the present invention, a serialization ratio SR between a primary channel and secondary channels is defined below. In an embodiment of the present invention, communications between primary (e.g. link or bus) and secondary channels (e.g. channel **370** having a plurality of signal lines) have matched bandwidth (i.e. no compression, coding/ECC overhead, or caching).

$$SR=BW_P:BW_S$$

where:

BW_P=bandwidth of primary channel (bits/sec/signal line)

BW_S=bandwidth of secondary channel (bits/sec/signal line)

The minimum number of secondary channel signal lines required to participate per transaction between primary and secondary channels is:

$$W_{DPT,S}=W_{DP,P}*SR$$

where:

$W_{DP,P}$=programmed data path width for primary channel

$W_{DP,S}$=total data path width for secondary channel

$W_{DPT,S}$=minimum number of secondary channel signal lines required to participate in each transaction

If the total number of secondary channel signal lines per configurable width buffer device **391**, $W_{DP,S}$ is greater than the minimum number required per transaction, $W_{DPT,S}$, then configurable width buffer device **391** may employ a configurable datapath router within interface **591** to route requests between the primary channel and the target subset of secondary channel signal lines for each transaction. According to a preferred embodiment, the target subset of secondary channel signal lines may be selected via address bits provided as part of the primary channel request. By accessing a subset of secondary channel signal lines per transaction, a number of benefits may be derived. One of these benefits is reduced power consumption. Another benefit is higher performance by grouping memory devices into multiple independent target subsets (i.e. more independent banks).

Operations circuit **572** (similarly, as described above) is included in configurable width buffer device **391** in an embodiment of the present invention. Operations circuit **572** includes storage circuit to store information used by the system in which the configurable width buffer device **391** is situated in, for example, to perform configuration operations. Alternatively the information may be stored in a serial presence detect device (SPD). Alternatively, the information may be stored in a number of different physical locations, for example, in a register within a memory controller or a separate integrated circuit on a system motherboard. Operations circuit **572** may store information representing a possible number of configurations of configurable width buffer device **391** and/or configurable width buffered module **395** in embodiments of the present invention. Other information, which may be stored includes, but is not limited to memory device parameters, such as access times, precharge times, setup and hold times, allowable skew times, etc. The functionality of operations circuit **572** may be included on an SPD device for example, an EEPROM device, that is readable by the system, such as a controller, to determine the capabilities of a configurable width buffer device **391** and/or configurable width buffered module **395**. A controller can then initialize or set system parameters, such as a data path or interface width, based on the values stored in the SPD device by generating control signals to a control terminal of configurable width buffered module **395**. For example, the SPD device may indicate to a controller that configurable width buffer device **391** has a maximum width of 64 as opposed to a maximum width of 128. In an alternate embodiment of the present invention, the SPD device stores a number of serialization ratios, for example, which may be programmed into a register, located on configurable width buffer device **391**.

State storage **576** may store a value that is repeatedly programmable or changeable to indicate different buffer device interface widths. The value stored in state storage **576** may be decoded to establish the desired configuration of configurable width interface **590**. In addition, state storage may store a plurality of values, for example, a first value that represents the desired width of configurable width interface **590**, and a second value that represents the desired width of one or more of interfaces **520***a* and **520***b*.

State storage may be programmed upon initialization by a controller device that communicates, to the configurable width buffer device, a value, which corresponds to the width of controller. The configurable width buffer device **391** may also automatically detect what the width of the interface of the controller device is upon power-up and set it's own value in state storage **576** accordingly.

In an embodiment of the present invention as illustrated by FIG. **5**B, state storage **576** is a programmable register comprising two programmable memory cells, latches, or other mechanisms for storing state information. Within the two cells, two bits are stored. The two bits can represent four different values, through different combinations of bit values (Ex: 00=x1, 01=x2, 10=x4, 11=x8). The different stored values correspond to different programmed buffer device widths. In an embodiment of the present invention, state storage **576** outputs to request & address logic **540** and configurable width interface **590**. In FIG. **5**B, a state storage **576** is fabricated within each of configurable width buffer device **391**. However, state storage **576** can alternatively be located in a number of different physical locations. For example, stage storage **576** might be a register within a memory controller or on a system motherboard. If the storage register is external to configurable width buffer device **391**, the width selection information is communicated to configurable width buffer device **391** via electrical signals propagated through module connector **390**. In an alternate embodiment of the present invention, a controller transfers width selection information by way of control signals to a control terminal of configurable width buffer device **391**.

Various types of state storage are possible. In the described embodiment, the state storage takes the form of a width selection register or latch. This type of state can be easily changed via software during system operation, allowing a high degree of flexibility, and making configuration operations that are transparent to the end user. However, other types of state storage are possible, including but not limited to manual jumper or switch settings and module presence detection or type detection mechanisms. The latter class of mechanisms may employ pull-up or pull-down resistor networks tied to a particular logic level (high or low), which may change state when a module is added or removed from the system.

State storage **576** can be repeatedly programmed and changed during operation of configurable width buffer

device **391** to indicate different interface widths. Changing the value or values of state storage **576** changes the interface width of configurable width buffer device **391**; even after configurable width buffer device **391** has already been used for a particular width. In general, there is no need to power-down or reset configurable width buffer device **391** when switching between different interface widths, although this may be required due to other factors.

There are many possible ways to implement a state storage **576**. Commonly, a register is defined as a state storage **576** that receives a data input and one or more control inputs. The control inputs determine when the storage node within the register will sample the data input. Some time after the register has sampled the input data, which data will appear on the output of the register.

The term register may apply either to a single-bit-wide register or multi-bit-wide register. In general, the number of bits in the width selection register is a function of the number of possible widths supported by the memory device, although there are many possible ways to encode this information.

FIG. **5**C illustrates another embodiment of configurable width interface **590** shown in FIG. **5**B. FIG. **5**C illustrates a multiplexer/demultiplexer circuit **597**, for example that may be disposed in configurable serialization circuit **591** (FIG. **5**B) to perform multiplexing/demultiplexing functions. For the embodiment illustrated by FIG. **5**C, the serialization ratio is 1:1. Serialization ratios greater than 1:1 are possible with the addition of serial-to-parallel (e.g., during write operations, for data intended to be written to the memory devices) and parallel-to-serial (e.g., during read operations, for data read from the memory device to be provided to the controller device) conversion circuits.

Multiplexer/demultiplexer circuit **597** includes four pairs of read and write data line pairs **594***a–d* coupled, by way of configurable width buffer device **391**, to respective memory devices **360**. In an alternate embodiment of the present invention, data line pairs **594***a–d* are coupled to a memory array in a memory device **360***a* by way of configurable width buffer device **391**.

Generally, multiplexer/demultiplexer circuit **597** contains multiplexing logic and demultiplexing logic. The multiplexing logic is used during read operations, and the demultiplexing logic is used during write operations. The multiplexing logic and demultiplexing logic are designed to allow one, two, or four (0–3) buffer device connections or pins in interface **596** to be routed to memory devices, and in particular individual memory cells.

In the one-bit wide configuration, buffer device data connection **0** can be routed to/from any of the four data line pairs **594***a–d*, which may be coupled to respective memory devices or memory cells in a memory device. In the 2-bit wide configuration, buffer device data connections **0** and **1** can be routed to/from data line pairs **594***a–b* or **594***c–d*, respectively. In the 4-bit wide configuration, buffer device data connections **0**, **1**, **2**, and **3** route straight through to/from data line pairs **594***a–d*, respectively.

Likewise, further data paths may be constructed to couple greater than four configurable width buffer device **391** data connections in an embodiment of the present invention.

Multiplexer/demultiplexer circuit **597** includes input and output latches **597***f–m*, two for each configurable width buffer device data connection in interface **596**. Multiplexer/demultiplexer circuit **597** also comprises five multiplexers **597***a–e*. Multiplexers **597***a–d* are two-input multiplexers controlled by a single control input. Multiplexer **597***e* is a four input multiplexer controlled by two control inputs.

Multiplexer/demultiplexer circuit **597** is configured to use two write control signals W_A and W_B, and two read control signals R_A and R_B. These signals control multiplexers **597***a–e*. They are based on the selected data path width and bits of the requested memory address or transfer phase (see FIG. **5**D, described below). State storage **576** (FIG. **5**B) produces these signals in response to the programmed data width, whether the operation is a read or write operation, and appropriate addressing information.

FIG. **5**D shows the control values used for data path widths of one, two, and four. FIG. **5**D also indicates which of interface **596** connections are used for each data width.

When a width of one is selected during a read operation, the circuit allows data from any one of the four data line pairs **594***a–d* (in particular, the read line) to be presented at interface **596** connection **0**. Control inputs R_A and R_B determine which of data bit signals will be presented at any given time. R_A and R_B are set (at this data width) to equal the least significant two bits (A_1, A_0) of the memory address corresponding to the current read operation.

When a width of one is selected during a write operation, the circuit accepts the data bit signal from interface **596** data connection **0** and routes it to all of the four data line pairs **594***a–d* (in particular, the write lines), simultaneously. Control inputs W_A and W_B are both set to a logical value of one to produce this routing.

When a width of two is selected during a read operation, the circuit allows any two of the four data bit signals associated with data line pairs **594***a–d* (in particular, the read lines) to be present at interface **596** connections **0** and **1**. To obtain this result, R_A is set to **0**, and R_B is equal to the lower bit (A_0) of the memory address corresponding to the current read operation. R_B determines which of two pairs of data bit signals (**594***a* and **594***b* or **594***c* and **594***d*) are presented at interface **596** connections **0** and **1** during any given read operation.

When a width of two is selected during a write operation, the circuit accepts the data bit signals from interface **596** connections **0** and **1**, and routes them either to data line pairs **594***a* and **594***b* (in particular, write lines), or to data line pairs **594***c* and **594***d* (in particular, write lines). W_A and W_B are set to **0** and **1**, respectively, to obtain this result.

When a width of four is selected by setting all of the control inputs (R_A, R_B, W_A, and W_B) to **0**, read and write data signals are passed directly between data line pairs **594***a–d* and corresponding interface **596** data connections **3**–**0**.

The circuit of FIG. **5**C is just one example out of many possible embodiments of the present invention. At the expense of increased logic and wiring complexity, an embodiment of the present invention uses a more elaborate crossbar-type scheme that could potentially route any single data bit signal to any data pair line or to any of the interface **596** data connections. In still further embodiments of the present invention, the number and width of memory devices, number of buffer device data connections per buffer device, serialization ratios, and width of data paths may be varied, singly or in combination, from the exemplary numbers and widths provided in describing particular embodiments of the present invention.

In embodiments of the present invention, a master device, such as memory controller **110**, includes configurable width interface **590**, as described herein, to access at least one configurable width buffered module.

In embodiments of the present invention, interfaces **520***a* and **520***b* include multiplexer/demultiplexer circuit **597**, also known as a type of partial crossbar circuit, for transferring

signals between configurable width buffer device **391** and memory devices on configurable width buffered module **395**. In an alternate embodiment of the present invention, a full crossbar circuit is used.

FIG. **5**E illustrates a configurable width buffered module **650** including a configurable width buffer device **651** coupled to memory devices **652** and **653** in an embodiment of the present invention. Memory devices **652** and **653** include memory cells **652***a–b* and **653***a–b*, respectively.

Channels DQ**1** and DQ**2** are coupled to configurable width buffered module **650** at a connector interface that includes at least a first contact and a second contact, and in particular to configurable width buffer device **651**. Channels DQ**1** and DQ**2** include a plurality of signal lines for providing signals to and from configurable width buffered module **650**. In an alternate embodiment of the present invention, a single or more channels are coupled to configurable width buffered module **650**. In an embodiment of the present invention, channels DQ**1** and DQ**2** are coupled to a master device, such as a controller.

Channels DQ**3** and DQ**4** are also coupled to configurable width buffer device **651** and are positioned in configurable width buffered module **650** in an embodiment of the present invention. Channels DQ**3** and DQ**4** couple configurable width buffer device **651** to memory devices **652** and **653**. Channels DQ**3** and DQ**4** include a plurality of signal lines for providing signals to and from memory devices **652** and **653**, and in particular memory cells **652***a–b* and **653***a–b*. In an alternate embodiment of the present invention, a single or more channels are coupled to memory devices **652** and **653**. In alternate embodiments of the present invention, more or less memory devices are included in configurable width buffered module **650**.

Configurable width buffer device **651** includes a plurality of transceiver circuits **651***a–f* capable of transmitting and receiving signals on channels DQ**1**–**4**. Each transceiver circuit **651***a–f* includes a transmitter circuit and a receiver circuit in an embodiment of the present invention. Transceiver **651***a* is coupled to channel DQ**1** and provides signals on channel DQ**3**. Transceiver **651***b* is coupled to channel DQ**3** and provides signals on channel DQ**1**. Transceiver **651***c* is coupled to channel DQ**1** and provides signals on channel DQ**4**. Transceiver **651***d* is coupled to channel DQ**4** and provides signals on channel DQ**1**. Transceiver **651***e* is coupled to channel DQ**2** and provides signals on channel DQ**4**. Transceiver **651***f* is coupled to channel DQ**4** and provides signals on channel DQ**2**. Both memory cells **652***a* and **652***b* are not accessed via channel DQ**1** during a single access operation in an embodiment of the present invention.

In an embodiment of the present invention, configurable width buffered module **650** operates in at least two modes of operation. In a first mode of operation, memory cell **652***a* and memory cell **652***b* in memory device **652** are accessible from a first contact coupled to channel DQ**1**. In particular, signals are transferred between channel DQ**1** and memory cell **652***a* by using transceiver **651***a*, transceiver **651***b* and channel DQ**3**. Transceiver **651***a* is used to write data signals to memory cell **652***a* and transceiver **651***b* is used to read data signals from memory cell **652***a*. Signals are transferred between channel DQ**1** and memory cell **652***b* using transceiver **651***c*, transceiver **651***d* and channel DQ**4**. Transceiver **651***c* is used to write data signals to memory cell **652***b* and transceiver **651***d* is used to read data signals from memory cell **652***b*.

In a second mode of operation, memory cell **652***a* and memory cell **652***b* in memory device **652** are accessible from a first contact coupled to channel DQ**1** and a second contact coupled to channel DQ**2**, respectively. In particular, signals are transferred between channel DQ**1** and memory cell **652***a* by using transceiver **651***a*, transceiver **651***b* and channel DQ**3**. Transceiver **651***a* is used to write data signals to memory cell **652***a* and transceiver **651***b* is used to read data signals from memory cell **652***a*. Signals are transferred between channel DQ**2** and memory cell **652***b* using transceiver **651***e*, transceiver **651***f* and channel DQ**4**. Transceiver **651***e* is used to write data signals to memory cell **652***b* and transceiver **651***f* is used to read data signals from memory cell **652***b*. In another embodiment of the present invention, memory device **653** is also coupled to channels DQ**3** and DQ**4** and includes memory cells **653***a* and **653***b* that are likewise accessible in at the two modes of operation described above.

FIG. **5**F illustrates a configurable width buffered module **660** where channel DQ**3** is coupled to memory cell **652***a* in memory device **652** and channel DQ**4** is coupled to memory cell **653***b* in memory device **653**. Like referenced components shown in FIG. **5**F operate and are described above in regard to FIG. **5**E. In this embodiment of the present invention, Configurable width buffer device **651** accesses two memory devices that do not share channels DQ**3** and DQ**4**. There are two modes of operation in an embodiment of the present invention. In a first mode of operation, memory cell **652***a* is accessed via channel DQ**1** and memory cell **653***b* is accessed via channel DQ**2**. In a second mode of operation, memory cell **652***a* is accessed via channel DQ**1** and memory cell **653***b* is accessed via channel DQ**1**. Both memory cells **652***a* and **653***b* are not accessed via channel DQ**1** during a single access operation in an embodiment of the present invention. FIG. **5**F conceptually illustrates accessing memory cells by a configurable width buffer device **651**. In order to clearly describe the present invention, one of ordinary skill in the art would appreciate that may components used in a buffer device and memory devices are not shown, such as memory device access logic and transceivers as well as configurable width buffer device **651** logic.

According to embodiments of the present invention, subsets of available memory devices on configurable width buffered module **395** are activated or powered-on during various modes of operation. Thus, configurable width buffered module **395** is able to achieve power savings by only powering particular memory devices.

With reference to FIGS. **6**A, and **6**B, block diagrams of a memory system according to embodiments of the present invention are illustrated. Memory system **600** includes modules **400***a* and **400***b*, controller **610**, and populated primary point-to-point links **620***a* and **620***b*. Unpopulated primary point-to-point links **630** are populated by coupling additional modules (not shown) thereto. The additional modules may be provided to upgrade memory system **600**. Connectors may be disposed at an end of each primary point-to-point link to allow insertion or removal of the additional modules. Modules **400***a* and **400***b* may also be provided with a connector or may be fixedly disposed (i.e., soldered) in memory system **600**. Although only two populated primary point-to-point links are shown in FIG. **6**A, any number of primary point-to-point links may be disposed in memory system **600**, for example, three primary point-to-point links **400***a*–**400***c*, as shown in FIG. **6**B.

With reference to FIG. **7** and FIG. **4**B, a block diagram of a memory system employing a buffered quad-channel module according to an embodiment of the present invention is

illustrated. Memory systems **700** incorporate quad-channel modules **450***a*–**450***d*, each coupled via point-to-point links **620***a*–**620***d* respectively.

Referring to FIG. **4**B, buffer device **405** may operate in a bandwidth concentrator approach. By employing quad channels **415***a*–**415***d* on each of modules **450***a*–**450***d*, bandwidth in each module may be concentrated from all quad channels **415***a*–**415***d* on each module to corresponding point-to-point links **620***a*–**620***d*. In this embodiment, throughput on each of point-to-point links **620***a*–**620***d* is concentrated to four times the throughput achieved on each of quad channels **415***a*–**415***d*. Here, each of channels **415***a*–**415***d* transfers information between one or more respective memory devices on each channel and buffer device **405** simultaneously.

Any number of channels **415***a*–**415***d*, for example; two channels **415***c* and **415***d* may transfer information simultaneously and the memory devices on the other two channels **415***a* and **415***b* remain in a ready or standby state until called upon to perform memory access operations. Different applications may have different processing throughput requirements. In addition, the throughput requirements of a particular application may dynamically change during processing. Typically, more power is consumed as throughput is increased as power consumption relates in proportion to operation frequency. The amount of throughput in a system may be implemented on a dynamic throughput requirement basis to save on power consumption. In this embodiment, memory system **700** may concentrate bandwidth as it is required while in operation. For example, memory system **700** may employ only one of channels **415***a*–**415***d* and match throughput to the corresponding point-to-point link. As bandwidth requirements increase, memory system **700** may dynamically activate more of channels **415***a*–**415***d* and increase the throughput on the point-to-point link along with the number of channels accordingly to meet the bandwidth requirements for a given operation.

With reference to FIG. **8**A, a block diagram of a large capacity memory system according to an embodiment of the present invention is illustrated. Memory system **900** includes modules **470***a*–**470***p*, coupled to controller **610** via repeaters **910***a*–**910***d*, primary links **920***a*–**920***d*, and repeater links **930***a*–**930***p*. Primary links **920***a*–**920***d* provide a point-to-point link between controller **610** and a respective repeater **910***a*–**910***d*. In an embodiment of the present invention, each of repeaters **910***a*–**910***d* decode packets transmitted from controller **610** which are then directed over one or more, or none of repeater links **930***a*–*d*, depending the type of access required. Each repeater link **930***a*–**930***p* may utilize a point-to-point link configuration. By incorporating, repeated links **930***a*–**930***p* and repeaters **910***a*–**910***d*, a larger number of modules may be accessed and a larger capacity memory system may be realized. Such a large capacity may be suited in a computer server system.

FIG. **8**B illustrates another approach utilized to expand the memory capacity of a memory system in accordance to yet another embodiment. Here, a plurality of buffered modules **950***a*–**950***d* are "daisy chained" via a plurality of point-to-point links **960***a*–**960***d* to increase the overall memory capacity. Connection points of each point-to-point link are connected to two adjacent buffered modules. Each of buffered modules **950***a*–**950***c* transceive signals between adjacent point-to-point links **960***a*–**960***d*. Point-to-point link **960***a* may be coupled to a controller or another buffered module. Additional point-to-point links may be coupled to a buffer device in a tree configuration approach. For example, three point-to-point links **970***a*–**970***c* each having a single end connected to one buffer device **980** may be employed as shown in FIG. **8**C.

Other point-to-point topologies include a "ring" in which a plurality of buffered modules are connected in a ring by a respective plurality of point-to-point links and a "star" where a plurality of memory modules are connected to a center memory module by a respective plurality of point-to-point links.

In various embodiment of the present invention, point-to-point links are unidirectional, bidirectional or a combination thereof. A unidirectional link transfers a signal in a single direction to or from a connection point. A bidirectional link transfers signals both to and from a connection point.

While this invention has been described in conjunction with what is presently considered the most practical embodiments, the invention is not limited to the disclosed embodiments. In the contrary, the embodiments disclosed cover various modifications that are within the scope of the invention as set forth in the following claims.

What is claimed is:

1. A memory module comprising:

a connector interface which includes a first contact and a second contact;

a first integrated circuit having memory including a first storage cell and a second storage cell; and

a buffer device coupled to the first integrated circuit and the connector interface, wherein the buffer device is operable in a first mode and a second mode, wherein:

during the first mode of operation, the first storage cell and the second storage cell are accessible from the first contact; and

during the second mode of operation, the first storage cell is accessible from the first contact and the second storage cell is accessible from the second contact,

wherein the buffer device includes a configurable width interface to communicate with a controller device via the connector interface, wherein the configurable width interface is configured to include a first operable number of interface circuits in the first mode and a second operable number of interface circuits in the second mode.

2. The memory module of claim **1**, wherein upon initialization, the buffer device detects a width of an interface of the controller device, wherein the buffer device configures the configurable width interface based on the width of the interface of the controller device.

3. The memory module of claim **1**, wherein the memory module includes a programmable storage device, wherein a number of possible configurations of the configurable width interface are specified by information stored in the programmable storage device.

4. The memory module of claim **3**, wherein the programmable storage device is a serial presence detect device.

5. The memory module of claim **1**, wherein the buffer device includes a control terminal to receive information from the controller device that represents the width of the interface of the controller device, wherein the configurable width is programmed based on the information.

6. A memory module comprising:

a connector interface which includes a first contact and a second contact;

a first integrated circuit having memory including a first storage cell and a second storage cell; and

a buffer device coupled to the first integrated circuit and the connector interface, wherein the buffer device is operable in a first mode and a second mode, wherein:

during the first mode of operation, the first storage cell and the second storage cell are accessible from the first contact; and

during the second mode of operation, the first storage cell is accessible from the first contact and the second storage cell is accessible from the second contact;

wherein the buffer device includes a programmable register, wherein the first mode and the second mode are specified by respective values stored in the programmable register.

7. A memory module comprising:

a connector interface which includes a first contact and a second contact;

a first integrated circuit having memory including a first storage cell and a second storage cell; and

a buffer device coupled to the first integrated circuit and the connector interface, wherein the buffer device is operable in a first mode and a second mode, wherein:

during the first mode of operation, the first storage cell and the second storage cell are accessible from the first contact; and

during the second mode of operation, the first storage cell is accessible from the first contact and the second storage cell is accessible from the second contact,

wherein the buffer device includes a control terminal, wherein the first mode and the second mode are specified by asserting respective control signals on the control terminal.

8. A memory module comprising:

a connector interface which includes a first contact and a second contact;

a first integrated circuit having memory including the first storage cell and a second storage cell; and

a buffer device coupled to the first integrated circuit and the connector interface, wherein the buffer device is operable in first mode and a second mode, wherein:

during the first mode of operation, the first storage cell and the second storage cell are accessible from the first contact; and

during the second mode of operation, the first storage cell is accessible from the first contact and the second storage cell is accessible from the second contact,

wherein the first mode of operation is a narrow width mode and the second mode of operation is a native width mode.

9. The memory module of claim **1**, wherein the first integrated circuit device includes:

a first transceiver circuit, to transfer data with the buffer device via a first external signal line disposed on the module;

a second transceiver circuit, to transfer data with the buffer device via a second external signal line disposed on the module;

a first internal data path coupled to the first transceiver circuit and the first storage cell;

a second internal data path coupled to the second transceiver circuit and the second storage cell, wherein the first storage cell is accessible via the first internal data path and the first transceiver and the second storage cell is accessible via the second internal data path and the second transceiver.

10. The memory module of claim **9**, wherein the first storage cell is a dynamic memory cell and the first transceiver circuit includes a transmitter to output data synchronously with respect to rising and falling edges of a clock signal.

11. The memory module of claim **1**, wherein the buffer device includes a configurable serialization circuit coupled to the connector interface, and a first port and second port coupled to the integrated circuit, wherein the first port is coupled to access the first storage cell and the second port is coupled to access the second storage cell, wherein:

in the first mode, the configurable serialization circuit is configured to steer a data stream from the contact to the both the first port and the second port; and

in the second mode, the configurable serialization circuit is configured to steer a first data stream for the first contact to the first port and a steer second data stream from the second contact to the second port.

12. The memory module of claim **1**, wherein the first and second contacts are included in a plurality of contacts disposed on a first edge surface of the memory module, wherein the plurality of contacts are coupled to the buffer device, to communicate with the first integrated circuit via the buffer device.

13. The memory module of claim **1**, wherein the buffer device includes;

transmitter circuit to transmit data onto a signal line coupled to the first contact; and

receiver circuit to receive data from the signal line.

14. The memory module of claim **13**, wherein the data transmitted by the transmitter circuit is multiplexed with the data received by the receiver circuit.

15. The memory module of claim **13**, wherein the transmitter circuit transmits data and the receiver circuit receives data simultaneously.

16. The memory module of claim **1**, wherein the buffer device includes:

unidirectional transmitter circuit to transmit data onto a first signal line disposed on the module; and

unidirectional receiver circuit to receive data from a second signal line disposed on the module.

17. The memory module of claim **1**, wherein the buffer device includes:

transmitter circuit to transmit a differential signal that includes encoded clock information;

receiver circuit to receive a differential signal that includes encoded with the data received by the receiver circuit.

18. The memory module of claim **1**, wherein the connector interface further includes a third contact and a fourth contact, wherein the memory module further includes:

a second integrated circuit having memory including a first storage cell and a second storage cell, wherein:

during the first mode of operation, the first and second storage cells of the second integrated circuit are accessible from the third contact; and

during the second mode of operation, the first storage cell of the second integrated circuit is accessible from the third contact and the second storage cell of the second integrated circuit is accessible from the fourth contact.

19. A memory module comprising:

a connector interface which includes a first contact and a second contact;

a first integrated circuit having memory including a first storage cell;

a second integrated circuit having memory including a second storage cell; and

a buffer device coupled to the first integrated circuit, the second integrated circuit and the connector interface, wherein the buffer device is operable in a first mode and a second mode, wherein:

during the first mode of operation, the first storage cell and the second storage cell are accessible from the first contact; and

during a second mode of operation, the first storage cell is accessible from the first contact and the second storage cell is accessible from the second contact,

wherein the buffer device includes a configurable with interface to communicate with a controller device via the connector interface, wherein the configurable width interface is configured to include a first operable number of interface circuits in the first mode and a second operable number of interface circuits in the second mode.

20. The memory module of claim **19**, wherein upon initializing, the buffer device determined an interface configuration of the controller of the controller device, wherein the buffer device configures the configurable width interface based on the interface configuration of the controller device.

21. The memory module of claim **19**, wherein the memory module includes a programmable storage device, wherein a number of possible configuration of the configurable width interface are specified by information stored in the programmable storage device.

22. The memory module of claim **19**, wherein the buffer device includes a control terminal to receive information from the controller device that represents an interface configuration of the controller device, wherein the configurable width is programmed based on the information.

23. A memory module comprising:

a connector interface which includes a first contact and a second contact;

a first integrated circuit having memory including a second storage cell;

a second integrated circuit having memory including a second storage cell; and

a buffer device coupled to the first integrated circuit, the second integrated circuit and the connector interface, wherein the buffer device is operable in a first mode and a second mode, wherein:

during the first mode of operation, the first storage cell and the second storage cell are accessible from the first contact; and

during a second mode of operation, the first storage cell is accessible from the first contact and the second storage cell is accessible from the second contact,

wherein the buffer device includes a programmable register, wherein the first mode and the second mode are specified by respective values stored in the programmable register.

24. The memory module of claim **19**, wherein the first and second contacts are included in a plurality of contacts disposed on a first edge surface of the memory module, wherein the plurality of contacts are coupled to the buffer device, to communicate with the first integrated circuit device via the buffer device.

25. The memory module of claim **19**, wherein the buffer device includes:

unidirectional transmitter circuit to transmit data onto a first signal line coupled to a controller; and

unidirectional receiver to receive data from a second signal line couple to the controller.

26. The memory module of claim **19**, wherein the buffer device includes:

transmitter circuit to transmit a differential signal that includes encoded clock information;

receiver circuit to receive a differential signal that includes encoded clock information; and

clock and data recovery circuit to extract the clock information encoded with the data received by the receiver circuit.

27. A memory module comprising:

at least one integrated circuit having memory disposed on the memory module; and

a buffer device including:

a memory interface to communicate with the at least one integrated circuit memory device; and

a controller interface to communicate with a controller device, wherein the controller interface includes a configurable number of interface circuits to configure how many parallel signaling paths the controller device uses to access the at least one integrated circuit via the buffer device,

wherein the buffer includes a serialization circuit coupled to the memory interface and the controller interface, wherein the serialization circuit includes a configurable serialization ratio for data being transferred between the memory interface and the controller interface.

28. The memory module of claim **27**, wherein upon initialization, the buffer device determines the serialization ratio based on an interface configuration of the controller device.

29. The memory module of claim **27**, wherein the memory module includes a programmable storage device, wherein a number of serialization ratios are specified by information stored in the programmable storage device.

30. A memory module comprising:

at least one integrated circuit having memory disposed on the memory module; and

a buffer device including:

a memory interface to communicate with the at least one integrated circuit memory device; and

a controller interface to communicate with a controller device, wherein the controller interface includes a configurable number of interface circuits to configure how many parallel signaling paths the controller device uses to access the at least one integrated circuit via the buffer device,

wherein the buffer device includes;

unidirectional transmitter circuit to transmit data onto a first signal line coupled to the controller device; and

unidirectional receiver circuit to receive data from a second signal line coupled to the controller device.

31. A memory module comprising:

at least one integrated circuit having memory disposed on the memory module; and

a buffer device including:

a memory interface to communicate with the at least one integrated circuit memory device; and

a controller interface to communicate with a controller device, wherein the controller interface includes a configurable number of interface circuits to configure how many parallel signaling paths the controller device uses to access the at least one integrated circuit via the buffer device,

wherein the buffer device includes:

transmitter circuit to transmit a differential signal that includes encoded clock information;

receiver circuit to receive a differential signal that includes encoded clock information; and

clock and data recovery circuit to extract the clock information encoded with the data received by the receiver circuit.

32. An integrated circuit buffer device comprising:

an interface port to communicate with at least one integrated circuit having memory, wherein the interface port includes a first transceiver circuit and a second transceiver circuit;

a configurable port interface to communicate with a controller device, wherein the configurable port interface includes a third transceiver circuit and a fourth transceiver circuit, wherein:

in a first configuration, the first transceiver circuit and the second transceiver circuit are coupled to the third transceiver circuit; and

in a second configuration, the first transceiver circuit is coupled to the third transceiver circuit and the second transceiver circuit is coupled to the fourth transceiver circuit.

33. The integrated circuit buffer device of claim **32**, further including a control terminal to receive information from the controller device that represents an interface configuration of the controller device, wherein the configurable port interface is configured based on the information.

34. The integrated circuit buffer device of claim **32**, further including a programmable register, wherein the first configuration and the second configuration are specified by respective values stored in the programmable register located on the buffer device.

35. The integrated circuit buffer device of claim **32**, further including a control terminal, wherein the first configuration and the second configuration are specified by asserting respective control signals on the control terminal.

36. The integrated circuit buffer device of claim **32**, wherein the third transceiver circuit includes:

unidirectional transmitter circuit to transmit data onto a first signal line coupled to the controller device; and

unidirectional receiver circuit to receive data from a second signal line coupled to the controller device.

37. The integrated circuit buffer device of claim **32**, wherein the third transceiver circuit device includes:

transmitter circuit to transmit a differential signal that includes encoded clock information;

receiver circuit to receive a differential signal that includes encoded clock information; and

clock and data recovery circuit to extract the clock information encoded with the data received by the receiver circuit.

38. A buffer device comprising:

a first interface to communicate with at least one integrated circuit having memory; and

a second interface, coupled to the first interface, to communicate with a controller device, wherein the second interface includes a configurable number of interface circuits to configure how many parallel signaling paths are used to access the at least one integrated circuit via the buffer device,

wherein each interface circuit of the configurable number of interface circuits includes;

unidirectional transmitter circuit to transmit data to the controller device; and

unidirectional receiver circuit to receive data from the controller device.

39. A buffer device comprising:

a first to communicate with at least one integrated circuit having memory; and

a second interface, coupled to the first interface, to communicate with a controller device, wherein the second interface includes a configurable number of interface circuits to configure how many parallel signaling paths are used to access the at least one integrated circuit via the buffer device,

wherein the second interface includes:

transmitter circuit to transmit a differential signal that includes encoded clock information;

receiver circuit to receive a differential signal that includes encoded clock information; and

clock and data recovery circuit to extract the clock information encoded with the data received by the receiver circuit.

40. A buffer device comprising:

memory interface means for communicating with at least one integrated circuit having memory; and

controller interface means for configuring how many parallel signaling paths a controller device uses to access the at least one integrated circuit memory via the buffer device,

wherein the controller interface means includes means for transmitting a unidirectional data signal to the controller device and means for receiving a unidirectional data signal from the controller device.

41. The buffer device of claim **40**, wherein upon initialization, the buffer device determines an interface configuration of the controller device, wherein the buffer device configures the configurable width interface based on the interface configuration of the controller device.

* * * * *

UNITED STATES PATENT AND TRADEMARK OFFICE

CERTIFICATE OF CORRECTION

PATENT NO. : 7,363,422 B2
APPLICATION NO. : 10/766131
DATED : April 22, 2008
INVENTOR(S) : Perego et al.

It is certified that error appears in the above-identified patent and that said Letters Patent is hereby corrected as shown below:

Col. 23, line 37, new claim 8: After “including” and before “first”- delete “the” and substitute with --a--

Col. 23, line 41, new claim 8: After “in” and before “first” - delete “the” and substitute with --a--

Col. 23, line 63, new claim 9: After “cell” and before “wherein” - insert line --; and an addressable memory array including the first storage cell and the second storage cell--

Col. 24, line 13, new claim 11: After “the” and before “contact” - insert --first--

Col. 24, line 16, new claim 11: After “stream” and before “the” - delete “for” and substitute with --from--

Col. 24, line 47, new claim 17: After “encoded” and before “with” - insert line --clock information; and clock and data recovery circuit to extract the clock information encoded--

Col. 25, line 11, new claim 19: After “configurable” and before “interface” - delete “with” and substitute with --width--

Col. 25, line 19, new claim 20: After “device” and before “an” - delete “determined” and substitute with --determines--

Col. 25, line 20, new claim 20: After “configuration” and before “of” - delete “of the controller”

Col. 25, line 25, new claim 21: After “possible” and before “of” - delete “configuration” and substitute with --configurations--

Col. 25, line 66, new claim 25: After “receiver” and before “to” - insert --circuit--

Col. 25, line 67, new claim 25: After “line and before “to” - delete “couple” and substitute with --coupled--

UNITED STATES PATENT AND TRADEMARK OFFICE

CERTIFICATE OF CORRECTION

PATENT NO. : 7,363,422 B2
APPLICATION NO. : 10/766131
DATED : April 22, 2008
INVENTOR(S) : Perego et al.

It is certified that error appears in the above-identified patent and that said Letters Patent is hereby corrected as shown below:

Col. 26, line 22, new claim 27: After "buffer" and before "includes" - insert --device--

Col. 28, line 17, new claim 39: After "first" and before "to" - insert --interface--

Signed and Sealed this

Nineteenth Day of August, 2008

JON W. DUDAS
Director of the United States Patent and Trademark Office