US007458733B2

(12) **United States Patent**
Anderl et al.

(10) **Patent No.: US 7,458,733 B2**
(45) **Date of Patent: Dec. 2, 2008**

(54) **COMPACT OPTICAL TRANSCEIVERS INCLUDING THERMAL DISTRIBUTING AND ELECTROMAGNETIC SHIELDING SYSTEMS AND METHODS THEREFOR**

(75) Inventors: **William James Anderl**, Rochester, MN (US); **Scott Michael Branch**, Rochester, MN (US); **David Peter Gaio**, Rochester, MN (US); **Michael Francis Hanley**, Rochester, MN (US); **William K. Hogan**, Rochester, MN (US); **Howard Victor Mahaney, Jr.**, Cedar Park, TX (US)

(73) Assignee: **International Business Machines Corporation**, Armonk, NY (US)

(*) Notice: Subject to any disclaimer, the term of this patent is extended or adjusted under 35 U.S.C. 154(b) by 0 days.

(21) Appl. No.: **11/930,579**

(22) Filed: **Oct. 31, 2007**

(65) **Prior Publication Data**

US 2008/0062640 A1 Mar. 13, 2008

Related U.S. Application Data

(63) Continuation of application No. 09/809,699, filed on Mar. 15, 2001, now Pat. No. 7,314,318.

(51) **Int. Cl.**

G02B 6/36	(2006.01)
H04B 10/00	(2006.01)
H05K 7/20	(2006.01)

(52) **U.S. Cl.** **385/92**; 361/688; 398/135

(58) **Field of Classification Search** ..... None
See application file for complete search history.

(56) **References Cited**

U.S. PATENT DOCUMENTS

6,047,172	A	4/2000	Babineau et al.
6,556,811	B1	4/2003	Sayers et al.
6,583,902	B1	6/2003	Yuen
6,856,769	B1	2/2005	Steffensen et al.

Primary Examiner—Tina M Wong
(74) *Attorney, Agent, or Firm*—Roy W. Truelson

(57) **ABSTRACT**

A method of cooling an optical transceiver that is mountable in a wall opening and a method of cooling a data transfer system in combination with an optical transceiver is described. An optical transceiver is provided that has a form factor and one end portion that is insertable within a wall opening in a wall. Ambient air is ventilated over a major surface portion of the optical transceiver by mounting said end portion to the wall opening so that at least one vent is formed within confines of the wall opening. The vent allows air to pass between the exterior and interior of the enclosure, and over the major surface portion of the optical transceiver.

7 Claims, 8 Drawing Sheets

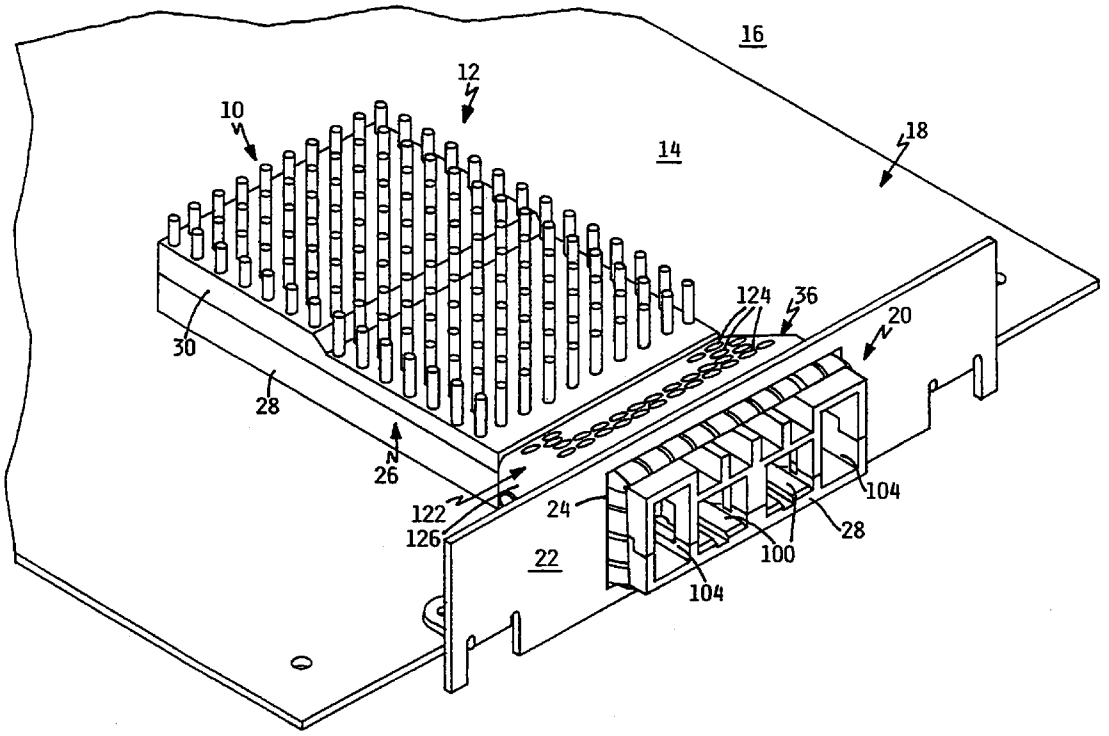

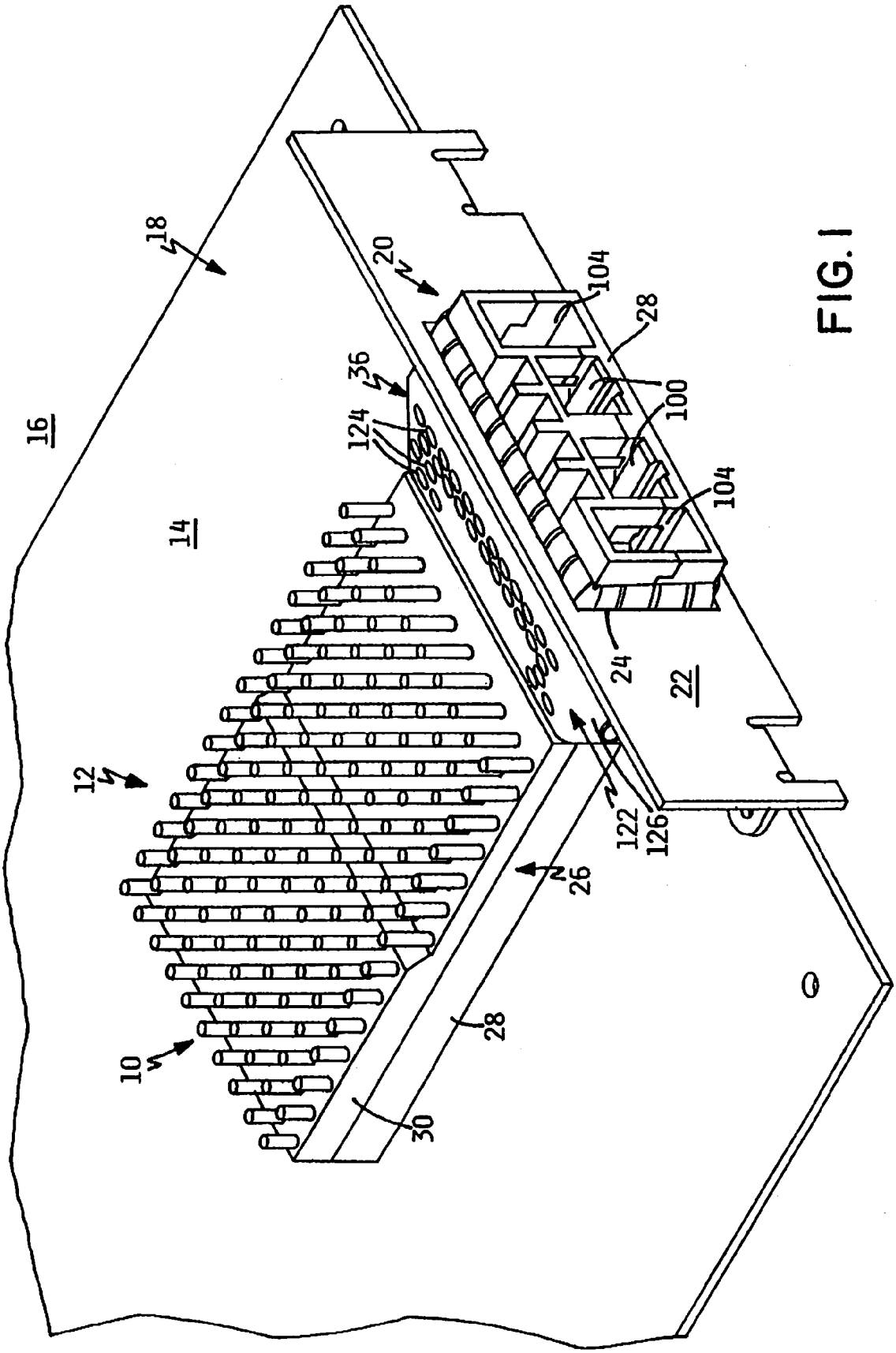

FIG. 1

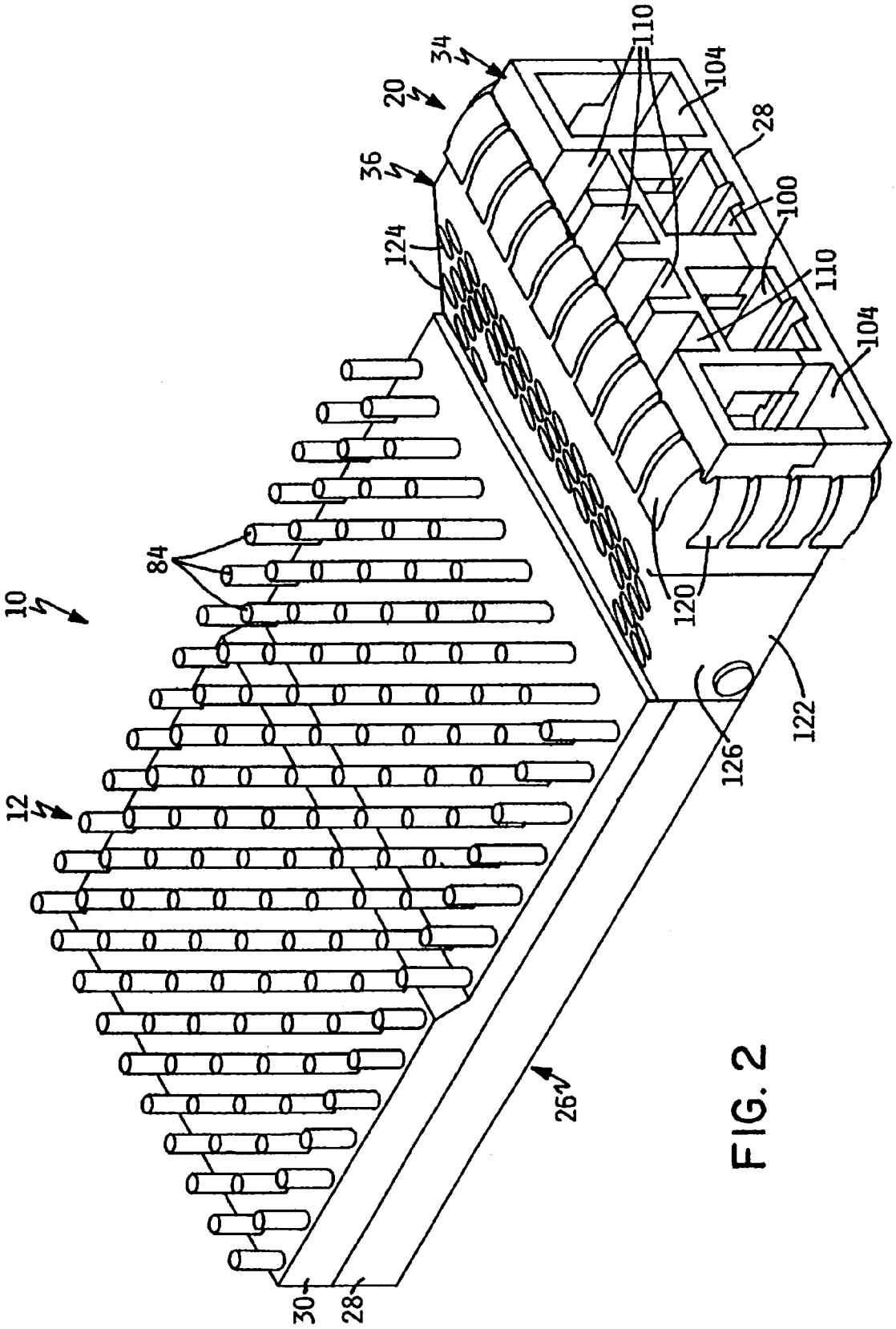

FIG. 2

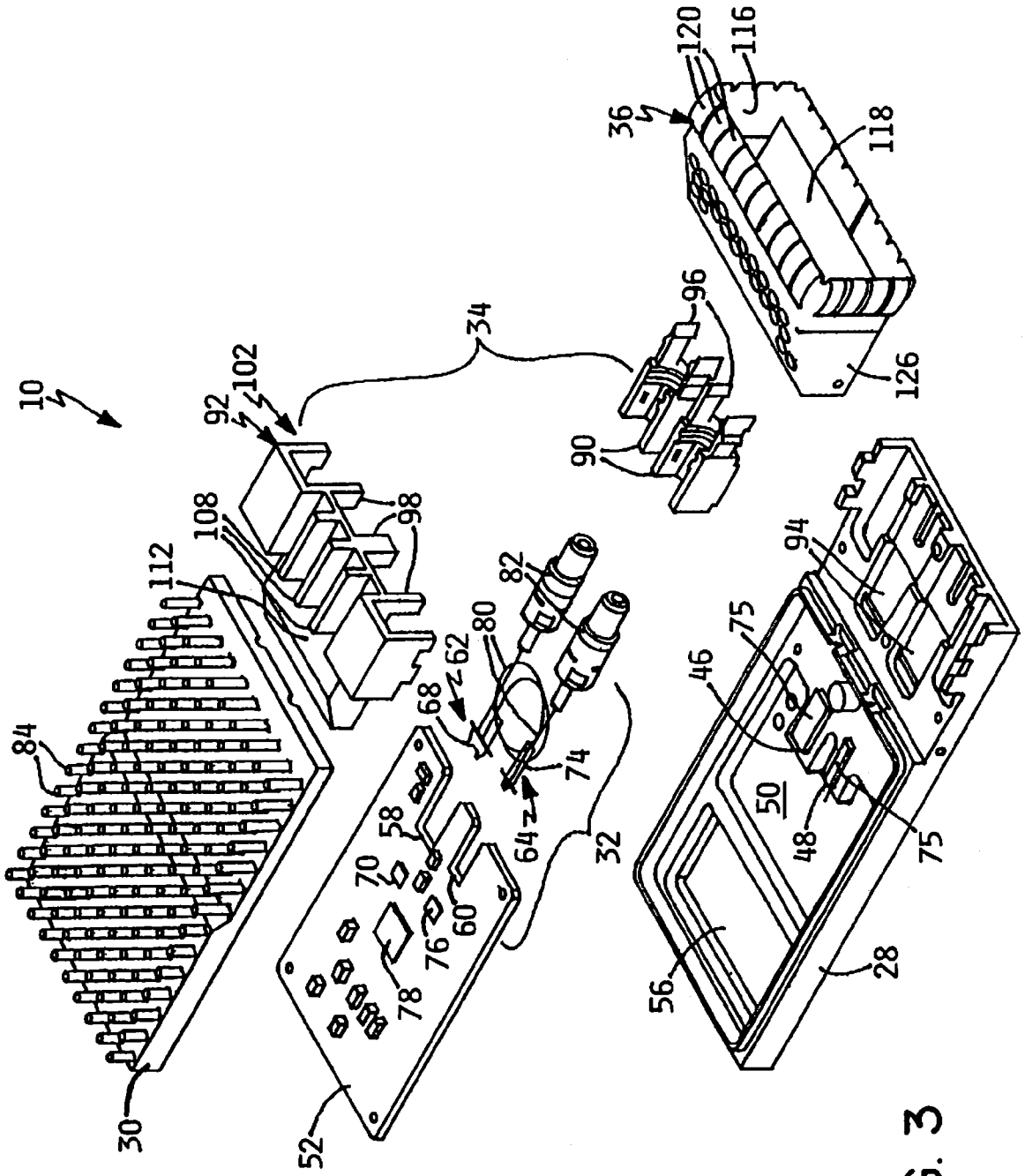
10
30
84
112
108
92
102
98
34
96
90
36
120
116
118
126
82
80
62
68
74
64
58
70
60
76
78
52
32
94
75
46
50
48
56
28

FIG. 3

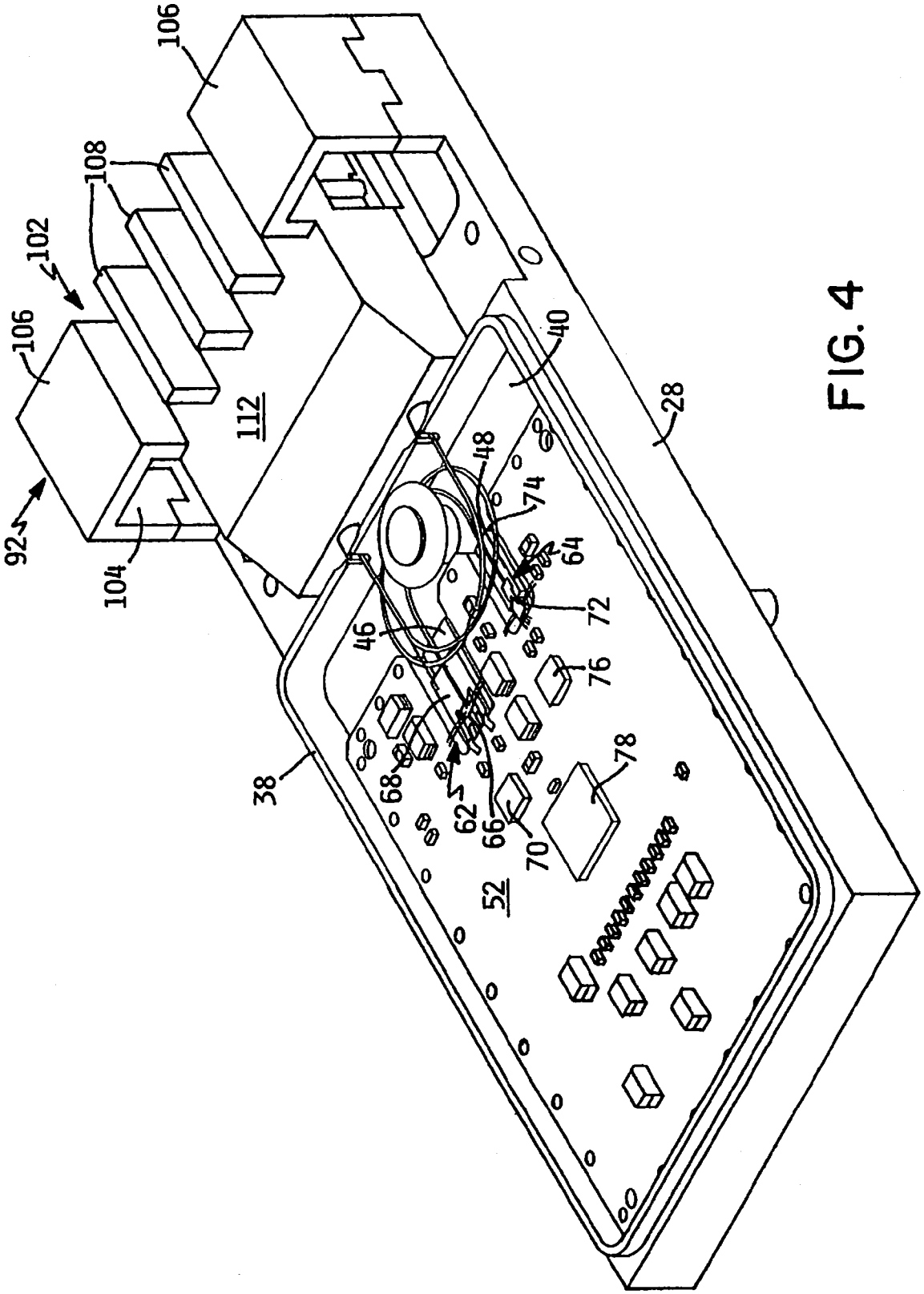
106
108
102
106
92
104
112
40
28
48
74
64
72
46
76
38
68
62
66
70
78
52

FIG. 4

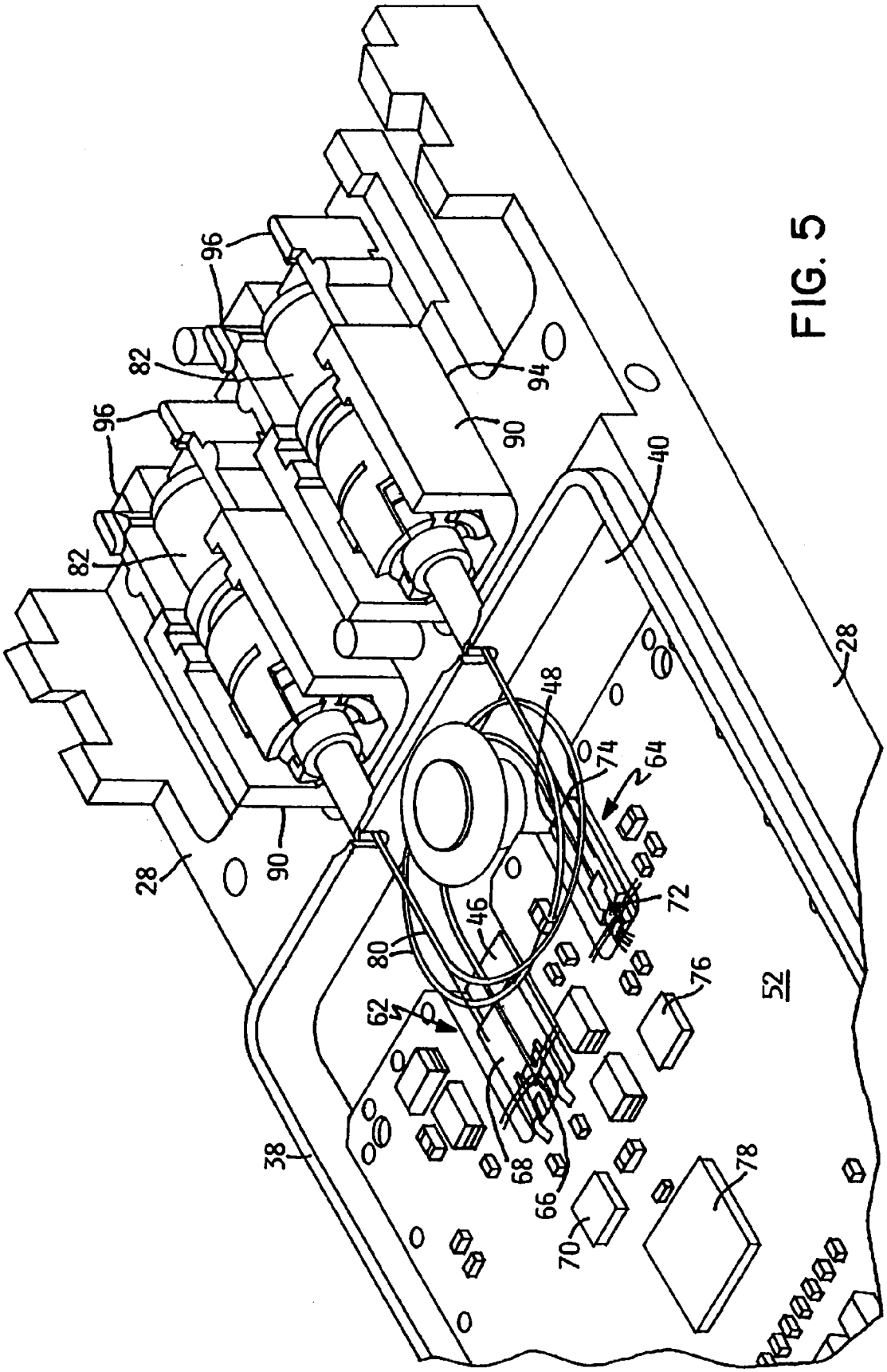

FIG. 5

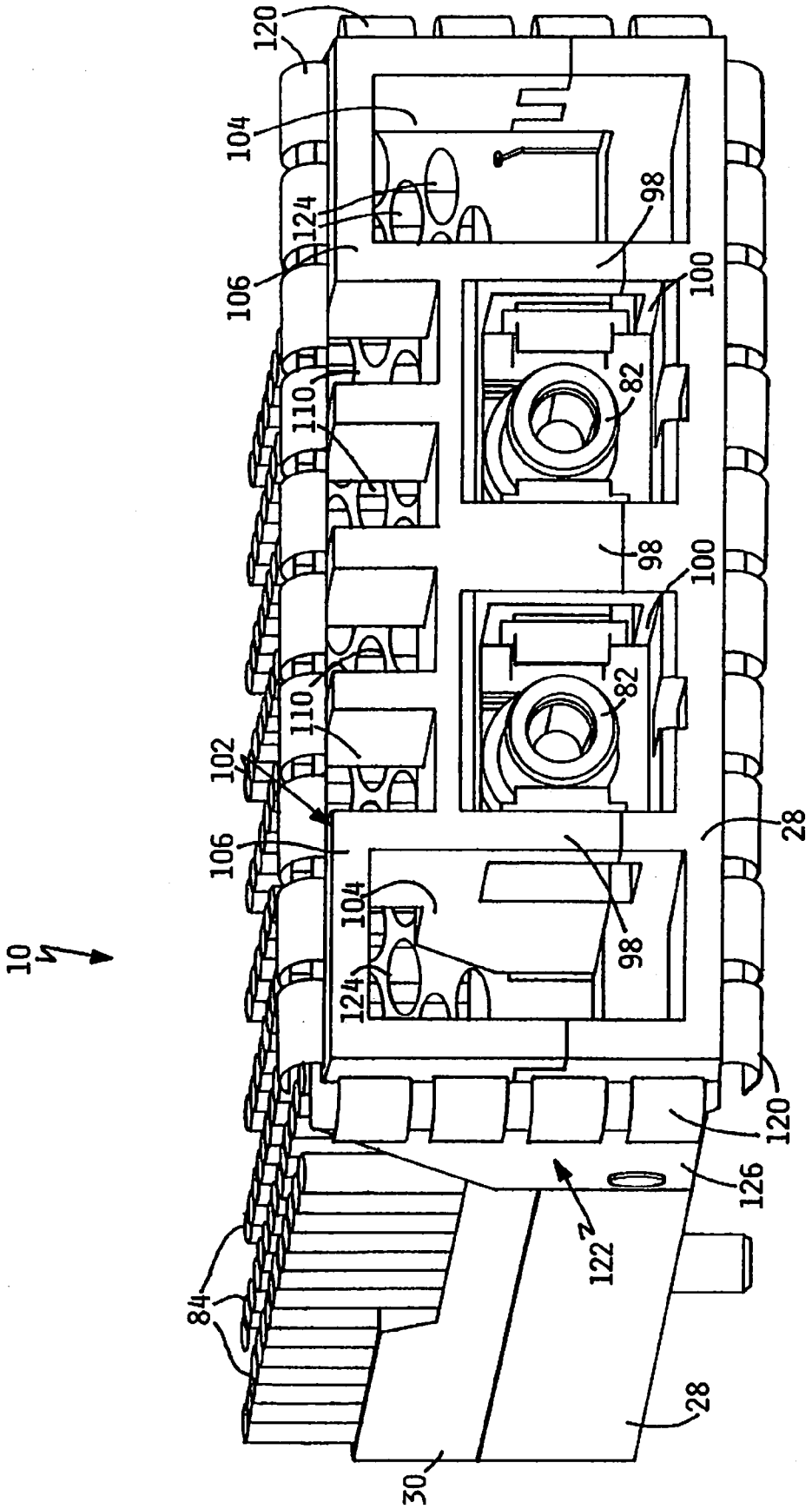

FIG. 6

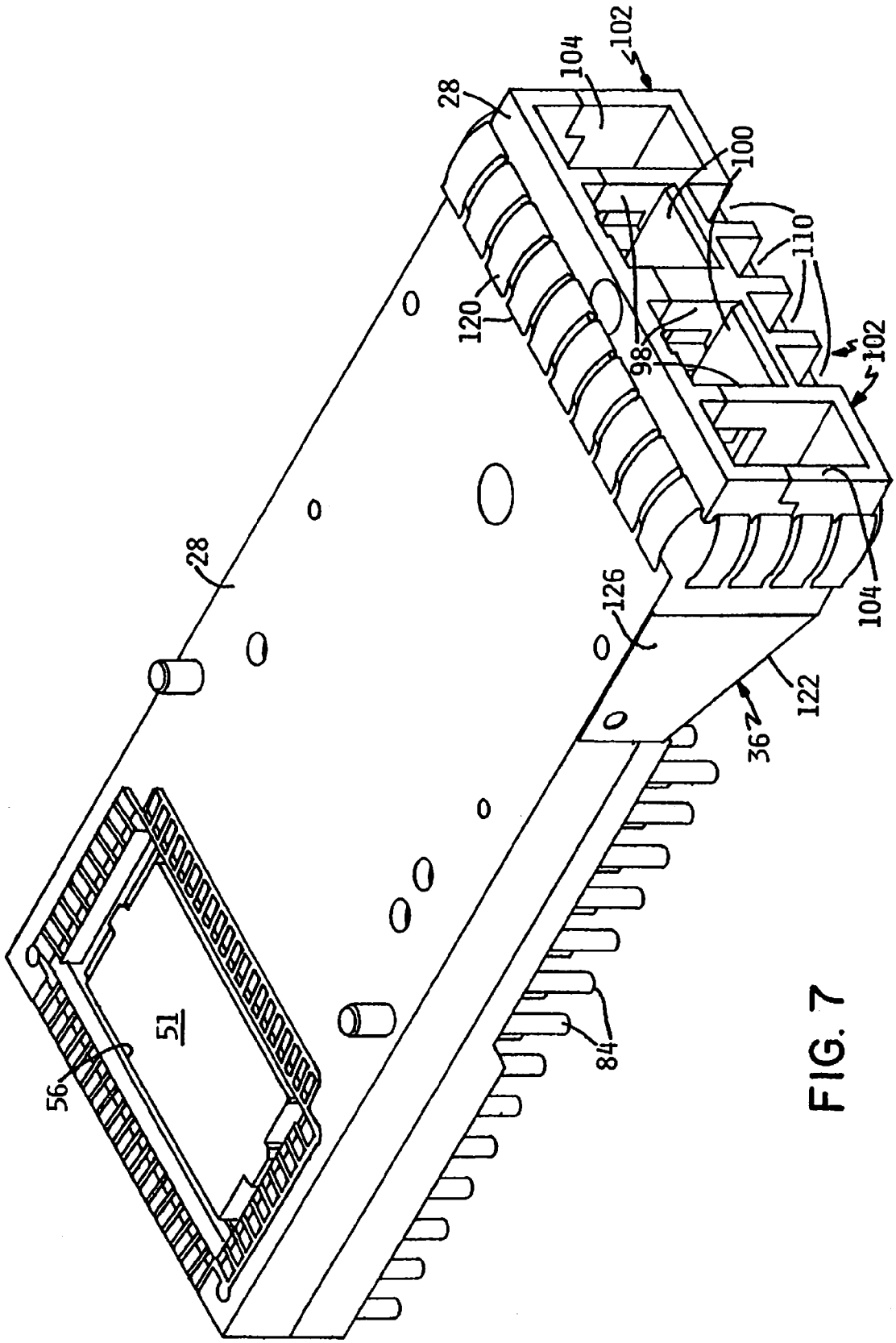

FIG. 7

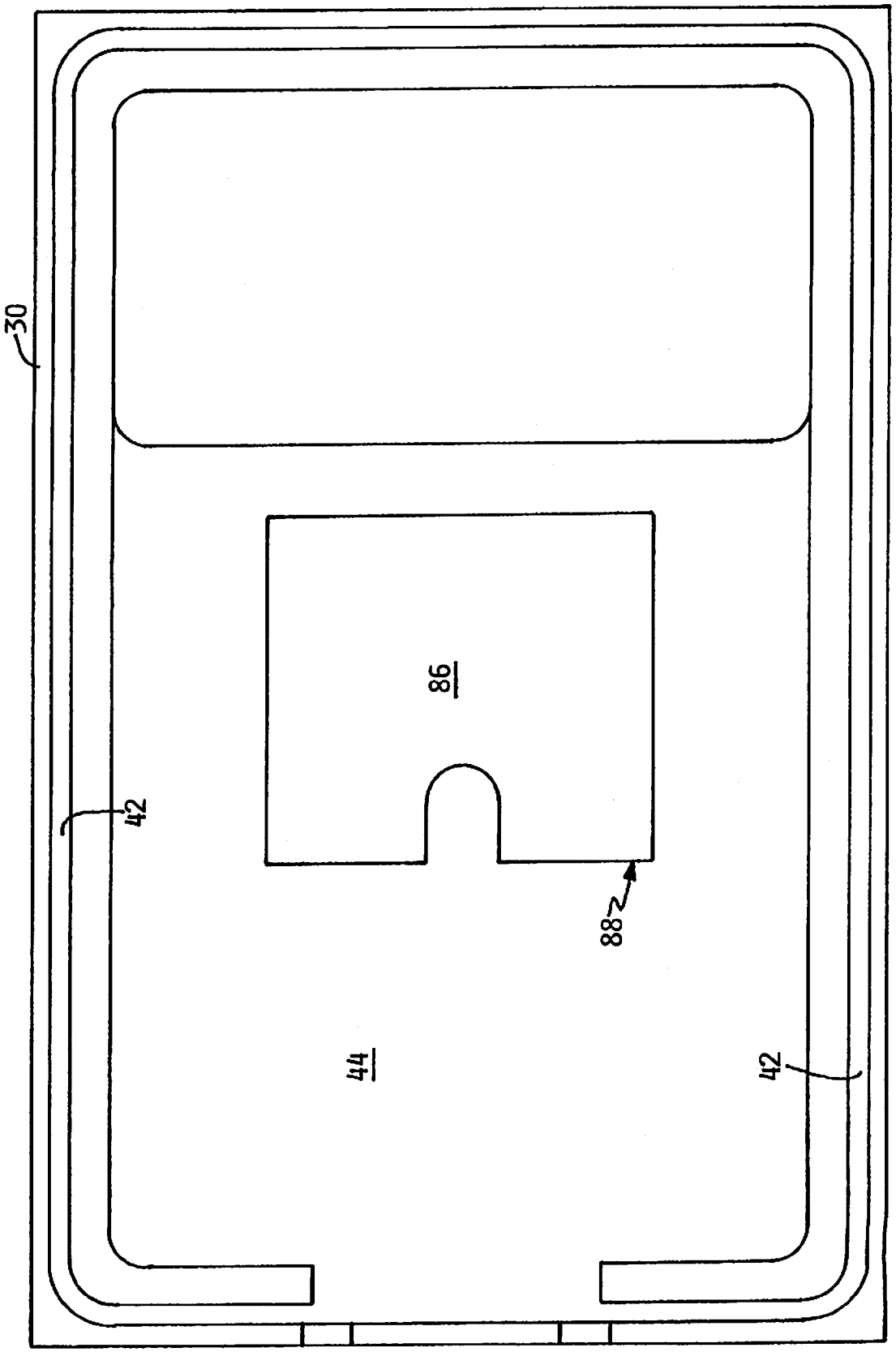

FIG. 8

COMPACT OPTICAL TRANSCEIVERS INCLUDING THERMAL DISTRIBUTING AND ELECTROMAGNETIC SHIELDING SYSTEMS AND METHODS THEREFOR

CROSS REFERENCE TO RELATED APPLICATIONS

This is a continuation of U.S. patent application Ser. No. 09/809,699, filed Mar. 15, 2001, entitled "COMPACT OPTICAL TRANSCEIVERS INCLUDING THERMAL DISTRIBUTING AND ELECTROMAGNETIC SHIELDING SYSTEMS AND METHODS THEREOF", which is herein incorporated by reference. This application claims priority under 35 U.S.C. §120 of U.S. patent application Ser. No. 09/809,699, filed Mar. 15, 2001.

The present application is related to the following commonly-assigned U.S. Patent Applications: U.S. Ser. No. 09/809,650, entitled: AN OPTICAL FIBER COUPLER AND AN OPTICAL FIBER COUPLER INCORPORATED WITHIN A TRANSCEIVER MODULE, now issued as U.S. Pat. No. 6,579,013; U.S. Ser. No. 09/809,531, entitled: TECHNIQUE AND APPARATUS FOR COMPENSATING FOR VARIABLE LENGTHS OF TERMINATED OPTICAL FIBERS IN CONFINED SPACES, now abandoned; and U.S. Ser. No. 09/809,127, entitled: HIGH FREQUENCY MATCHING METHOD AND SILICON OPTICAL BENCH EMPLOYING HIGH FREQUENCY MATCHING NETWORKS, now abandoned; all filed concurrently with the parent of the present application and all incorporated herein as a part hereof.

BACKGROUND OF THE INVENTION

The present invention relates generally to a laser-based data communication interconnect apparatus for effecting optical data transfer and, more particularly, to compact optical transceiver methods having improved thermal distributing and electromagnetic interference shielding features.

Optical transceiver modules are known in the data transmission field for effecting bidirectional data transmission, whereby electrical signals are converted to optical signals and vice versa. In operation, a transmitter unit of the module functions to convert incoming electrical signals to corresponding optical signals. Conversely, incoming optical signals are converted by the module's receiving unit into corresponding electrical data signals. These modules are typically mounted on a circuit host card that is normally associated with a host computer, input/output device, switch, or other peripheral device.

In general, space saving concerns are important to end users desiring to use such modules in order to satisfy established or emerging standards as to a size or form factor. It will thus be appreciated that there is a commercial desire for relatively small and compact modules; especially those that are adapted to be integrated into a wide range of existing and evolving networking systems.

Not only are compactness concerns important for module design, but so are thermal management issues. This is because transceiver modules, in operation, tend to generate relatively significant amounts of heat. In fact, as data transfer rates increase, for example in the multi-gigabit range, so does the heat generated thereby owing to the higher amounts of power required. It will be appreciated, therefore, that the higher power needs and the desire for module compactness tend to increase the amount of excessive heat generated within a module having reduced space for its components.

Not only do the smaller confines of a reduced sized module impact negatively on overall thermal management issues in a general sense, but such compactness places some of the module's components that operate at relatively high temperatures even closer to components that must operate at cooler temperatures, for optimal performance reasons, thereby adversely affecting the performance of the latter. For instance, in order to maintain high performance reliability for a module's laser diode, it should be kept relatively cooler than its associated driver; the latter of which tends to operate at much higher temperature ranges. Accordingly, significant and opposing design constraints are imposed on the manufacture and reliable operation of such transceivers considering the countervailing demands for more powerful transceiver components and end user demands for module compactness satisfying industry standards.

Many known transceiver modules when mounted to an opening of a data system bulkhead tend to block the passage of cooling air therethrough. This blockage is, in part, necessitated by the desire of shielding against excessive electromagnetic interference emissions emanating from such opening. The blockage creates, however, a tendency for the interior space of the data system which houses the module to overheat, thereby lessening the effectiveness of a module's internal cooling approach. Such blockages additionally place heating burdens on the data system itself. This is especially troublesome to end users when they desire more powerful transceiver modules because existing data systems may not be able to effectively cool the additional heat being added thereto.

As a result, emphasis is being placed on the utilization of heat sinks and other means for managing heat issues arising from transceiver use. Known attempts at addressing the heating problems in transceivers of this type include those described in commonly-assigned U.S. Pat. No. 5.757,998; issued to R. Johnson et el. This patent describes an optical transceiver having a cover and several components of the module serving as heat sinks. Also, insofar as electromagnetic interference is concerned, known attempts at addressing the need for a low cost and reliable approach for the reduction of electromagnetic interference emissions when mounting a transceiver to a wall opening include those described in commonly-assigned U.S. Pat. No. 6,085,006; issued to D. Gaio et al. This patent describes an optical transceiver having an external electromagnetic interference shield that slides over a module end portion that encloses an optical fiber connection assembly. The shielded end portion is retained in an opening of an associated data system for allowing connectors to be connected thereto.

While the known approaches have been successful concerning controlling thermal and electromagnetic interference issues, there is, nevertheless, a continuing desire to improve upon the control of such issues effectively. For without improvements regarding effective thermal and electromagnetic interference emission control management; especially in a compact and cost-effective manner, the ability of such transceivers to maintain reliable optimal performance characteristics in a commercially viable manner will continue to be limited.

SUMMARY OF THE INVENTION

In an embodiment, the present invention makes provisions for a method of cooling an optical transceiver that is mountable in a wall opening, and a method of cooling a data transfer system in combination with an optical transceiver. The method comprises the steps of: providing an optical trans-

ceiver having at least one end portion that is insertable within the wall opening; and, ventilating ambient air over a major surface portion of the optical transceiver by mounting the one end portion to the wall opening so that at least one vent is formed within the confines of the wall opening which allows air to pass therethrough and over the major surface portion of the optical transceiver. In addition, such a method comprises the step of: shielding the optical transceiver, the vent, and the wall opening from electromagnetic interference.

BRIEF DESCRIPTION OF THE DRAWINGS

For a more complete understanding of the present invention, reference is now made to the following detailed description of a preferred embodiment of the present invention illustrated in the accompanying drawings in which:

FIG. **1** is a perspective view, with portions broken away, of an optical transceiver module made according to the present invention being mounted on a host circuit card of a data transfer system;

FIG. **2** is a perspective view of the optical transceiver module as illustrated in FIG. **1**;

FIG. **3** is an exploded perspective view of the module shown in FIG. **1** and **2**;

FIG. **4** is a perspective view of the module shown in FIGS. **1-3** with a heat sink cover removed for clarity;

FIG. **5** is an enlarged and fragmented perspective view of the module illustrated in FIG. **4** with other components removed for additional clarity;

FIG. **6** is a perspective end view of the transceiver module;

FIG. **7** is a perspective bottom view of the transceiver module; and,

FIG. **8** is a plan view on an interior of a heat sink cover member of the module.

DETAILED DESCRIPTION

FIGS. **1-8** illustrate one preferred embodiment of an optical transceiver module made according to the principles of the present invention and designated by reference numeral **10**. As illustrated in FIG. **1**, the optical transceiver module **10** has a first or proximal end portion **12** mounted directly on a host circuit card **14** of a known type that is within a space **16** formed by a host data transfer system **18**, such as a mid-range computer system commercially available from International Business Machines Corporation. Other types of data transfer or communication systems are contemplated for use with the transceiver module of the present invention, such as input/output devices, or other peripheral devices. The proximal end portion **12** of the optical transceiver module **10** is otherwise attached to the host card by suitable attaching elements, such as screws (not shown). A distal or connector end portion **20** of the module is releasably coupled to a system wall **22** in a manner to be described after being inserted into a system access opening **24**. In this embodiment, the connector end portion **20** is configured to be coupled to a suitable push-pull duplex "SC" connector (not shown) in a known manner. While a duplex "SC" type connection is envisioned, a comparable end portion cooperable with other known connectors, such as for example, a single "SC" connector, a "LC" connector, or a "MT-RJ" connector can be used.

Reference is made to FIGS. **2-3**, which depict the optical transceiver module **10** comprising, in essence, a housing assembly **26** including a carrier member **28** mated to a heat dissipating apparatus or heat sink cover member **30**; an optical subassembly **32**; an optical retaining unit or assembly **34**; and, an electromagnetic interference (EMI) assembly or unit **36**. Initial reference is made to the carrier member **28** that has, preferably, an integral construction with a rectangular shape and is made of a suitable material for use in such transceivers. The thickness of the walls of the carrier member and heat sink cover member are selected to ensure generally uniform heat dissipation yet maintain electromagnetic interference integrity. Preferably, such a material serves to dissipate heat and acts as a shield for reducing the emissions of undesired EMI. Ideally, the carrier member **28** is made of a low cost, die-cast metal, such as aluminum metallized with nickel silver. Also, the carrier member **28** can be made of other appropriate materials that will achieve the foregoing functions. Examples of such other carrier materials include but are not limited to copper, silver and zinc. Besides a nickel silver plating other suitable metals, such as silver or gold can be used for plating the aluminum.

As seen in FIGS. **3-5**, the carrier member **28** has an upstanding peripheral lip or wall **38** that surrounds and, in part, defines an enclosure **40** which is a space between the carrier member **28** and the heat sink cover member **30**. The wall **38** fits snugly within a corresponding and complementary shaped recess **42** formed in a bottom wall **44** (FIG. **8**) of the heat sink cover member **30** to maintain EMI integrity. A pair of spaced apart and generally parallel pedestals **46** and **48** are raised from an enclosure floor surface **50**.

Reference is made to the optical subassembly **32** that includes a printed circuit board member **52** that is sized and configured to be mounted within the enclosure on the floor surface **50**. The printed circuit board may comprise any suitable type of rigid or a flexible type substrate. A conventional pin connector **51**, as seen in FIG. **7**, is on the bottom of the circuit board member and is registered with a rectangular opening **56** formed in the carrier member so as the pin connector can be attached to the host card in a known manner. The printed circuit board member **52** is formed with a pair of generally parallel and spaced apart cutouts **58** and **60**. Each of the cutouts **58**, **60** receives a respective one of the pedestals **46** and **48**; respectively.

An electro-optical transmitter subassembly (TOSA) unit **62** and an electro-optical receiver subassembly (ROSA) unit **64** are mounted on the pedestals **46** and **48**; respectively. Both the TOSA and ROSA units do not, per se, form an aspect of the present invention. Hence, a detailed description thereof is not necessary for understanding this invention. However, only those portions necessary for understanding this invention will be described. In this embodiment, the TOSA unit **62** includes an electronic component, such as a laser diode **66** (FIG. **4**) that is directly mounted on a silicon optical bench **68** and is wired to an electronic device, such as a laser driver chip **70** mounted on the circuit board **52**. The laser driver chip **70** tends to operate at temperatures of about 100 C. This temperature value is in a range that is significantly higher than an operational temperature value of the laser diode **66** (e.g. 70 C) which is in a temperature range that is lower than the noted driver chip range. Without the advantages of this invention, the higher temperatures of the chip **70** can adversely affect performance of the laser diode; with the latter operating out of its optimal performance range. The ROSA unit **64** includes an optical receiver **72** (FIG. **4**) mounted on a silicon optical bench **74** and is wired to an optical amplifier chip **76** on the printed circuit board. Both the TOSA and ROSA units are, in turn, wired to a SERDES (serial/deserializer) chip **78**; the latter of which also tends to optimally perform in a temperature range that is higher than that of the laser diode. The silicon optical benches **68** and **74** are, in turn, correspondingly mounted on and secured to the pedestals **46** and **48**; respectively. Preferably, this is accomplished by a layer **75**

(FIG. **3**) of a thermally and electrically conductive adhesive material that has been applied in a known manner. The material for the layer is a silicone adhesive grease, such as JM 9000 which is used for bonding electronic parts where high heat transfer is required. This material is commercially available from General Electric. The thermal adhesive layer **75** in this embodiment can have a thickness of about 0.001 inches. Clearly, other thicknesses are contemplated. Whichever materials and thickness are selected they should have thermal conductivities in a range which conducts heat from the laser diode so as to assist in maintaining the latter at its optimal temperature operating range. For example, thermal conductivity can be in a range that is greater than 180 watts/mT; wherein m represents meters and T represents temperature in Kelvin. In this embodiment, other values of thermal conductivity can be used, such as 200 watts/mT. Accordingly, cooling of the TOSA and ROSA units is effected by thermal conduction to the carrier member the latter of which is also kept exposed externally to ambient as shown so as to enhance cooling.

It will be further noted that the laser diode **66** and the silicon optical bench **68** of the TOSA unit **62** by being mounted on the pedestal **46** of the carrier instead of the printed circuit board is not heated directly from the board by the heat generating electronic components, such as the SERDES **78**, amplifier **76**, and driver **70**. Likewise, the components of the ROSA unit **64** by being mounted on the pedestal **48** do not have the heat of such components directly affecting them. The foregoing described construction allows a relatively inexpensive yet effective approach for cooling the components, such as the TOSA and ROSA units that should be operated at lower temperatures than temperatures generated by the chips on the printed circuit board. Also, it will be noted that this cooling is enhanced by reason of the carrier member extending beyond the wall.

Continued reference is made to FIGS. **3-5**, wherein a looped optical fiber **80** extends from a respective one of the TOSA and ROSA units. Each of the optical fibers **80** cooperate with a SC optical coupler **82** that optically couples the optical fibers to the SC connector. It will be appreciated that the optical couplers can be of the SC or LC type. Details of the optical fibers **80** and their cooperation with the optical couplers **82** do not form a part of the present invention, but are described more completely in U.S. Ser. No. 09/809,531, entitled: TECHNIQUE AND APPARATUS FOR COMPENSATING FOR VARIABLE LENGTHS OF TERMINATED OPTICAL FIBERS IN CONFINED SPACES; and, U.S. Ser. No. 09/809,650, entitled: AN OPTICAL FIBER COUPLER AND AN OPTICAL FIBER COUPLER INCORPORATED WITHIN A TRANSCEIVER MODULE.

The heat sink cover member **30** is a heat dissipating apparatus that essentially functions to transfer heat from the heat generating electronics (e.g., Serdes, amplifier and laser driver) as well as shields against electromagnetic interference exceeding undesirable limits. In this embodiment, the heat sink cover member **30** is a generally thin and rectangularly shaped plate. It can be made of a variety of materials. Preferably they should be the same kind as the carrier member. In this embodiment, the heat sink cover member is made of an aluminum coated with nickel silver. A plurality of heat dissipating elements or fins **84** project from an external surface thereof and are deployed in the manner illustrated. The fins **84** are generally uniformly spaced apart relative to each other by a distance of about 5 mm from centerline to centerline so as to allow air flow therearound in any direction and in good cooling convective relationship with each other. Accordingly, this facilitates cooling of the module in a variety of host systems that force air therein for cooling in different directions. In addition, the noted fin spacing serves to minimize the build up of lint or other similar airborne debris on the module. Further in this regard, the noted spacing between the fins should generally not be less than about 2 mm before lint build-up becomes problematic. The fins **84** are tapered from bottom to top for enhancing the amount of surface area that can be used for heat dissipation. The present invention contemplates that the fins can have other configurations, spacings and heights. In fact, the fins need not substantially cover the upper surface area of the heat sink cover. The fins **84** can cover separate and distinct portions of the heat sink cover member, such as only those portions intended to receive the heat of the chips through conduction. Although it is ideal to have the fins made of the same material as the remainder of the cover such need not be the case. In this embodiment, the heat fins **84** terminate in a generally common plane and at a height that is preferably below the height profile imposed by an end user.

FIG. **8** depicts the bottom wall **44** of the heat sink member having a centrally disposed and integrally formed heat transfer pad **86** having a smooth and flat surface sized to at least cover the chips **70**, **76** and **78** as well as be in close proximity thereto, for example, in the order of about 2 mils to 4 mils. A thermally conductive unit such as a thermal adhesive layer **88** generally uniformly covers the heat transfer pad **86**. The thermal adhesive layer **88** mechanically and thermally couples the upper surfaces of the chips to the heat transfer pad **86**. In this manner there is a greater likelihood that the laser diode **66** will remain at its desired operating temperature. Thermal conductivity of the thermal adhesive layer **88**, in this embodiment, should be high and can exceed about 200 watts/mT. Other thermal conductivity ranges are envisioned depending on the temperatures that are generated by the components. The thermal layer **88** should be thick enough to accommodate manufacturing tolerance spacings between the pad and the chips. While the adhesive layer is thermally conductive, it is preferred that it need not be electrically conductive due to the desire to minimize electromagnetic interference that might otherwise be propagated through an electrically conductive material. For reliable operation, the thermal adhesive layer **88** should be mechanically compliant and due to the relatively flat surface of the transfer pad **86** the occurrence of bond lines in the adhesive layer **88** is minimized, thus decreasing the tendency of the adhesive to form air gaps therein which would hinder the transfer of heat. The thermal adhesive layer **88** can be made from a variety of materials including but not limited to silicone adhesives. In this embodiment, a type 6E3281 silicon adhesive commercially available from General Electric is used.

In this preferred embodiment, an optical retaining unit **34** comprises a pair of plastic optical ferrule coupler retainers **90** for removably retaining the optical couplers **82** and for being in covering relationship thereto a retainer cover member **92**. Each of the optical ferrule coupler retainers **90** is mounted in a respective pocket **94** formed on the carrier member **28** and removably secures an optical coupler therein. The optical ferrule coupler retainers **90** are secured in place by the retainer cover member **92** that is appropriately secured to the carrier member. Details of the optical ferrule coupler retainers **90** do not form an aspect of the present invention, but are described in said copending U.S. Patent application: U.S. Ser. No. 09/809,650. A pair of latches **96** protrude axially from one end of the optical ferrule coupler retainers **90** and facilitate a snap-fit connection with respective ends (not shown) of, for instance, a push-pull, duplex SC connector, whereby the latter are properly registered to the former for data transmission as is known in the data transmission field.

Referring back to FIGS. **1**,**2**,**6** & **7**, the retainer cover member **92** is seen to have a unitary construction made of an electrically conductive material that primarily serves to shield against EMI, but also serves to conduct heat. The retainer cover member **92** in this embodiment is made of aluminum coated by nickel silver so as to be suitable for EMI shielding and heat conduction. Other suitable materials can be used. While a unitary construction is shown, such need not be the case. The retainer cover member **92** is secured to the carrier member as by fasteners (not shown) and includes a first set of wall structures **98** that are spaced apart and depend from a central member. These wall structures **98**, in combination, with the carrier member **28** and the latches **96** define a pair of lateral electrical connector ports **100** for allowing receipt of appropriate portions of a push-pull, duplex SC connector.

The retainer cover member **92** also includes a second set of structures **102** that, in combination, with the carrier member **28** define respective air vents as will be described. In this embodiment, the second set of structures **102** includes a pair of laterally extending and generally U-shaped side arms **106** which cooperate with upstanding wall portions on the carrier member **28** as illustrated for defining air vents **104** that are laterally disposed adjacent to the connector ports **100** and extend from the plane of the wall. The air vents **104** allow bidirectional passage of air therethrough, whereby air can easily pass in a generally longitudinally extending path over a substantial surface portion of the module. This facilitates greatly the ability of cooler ambient air outside the data system passing thereinto. Since the external air is cooler, it will also facilitates improved cooling of the module not to mention the internals of the data system. The second set of structures **102** includes a plurality of upstanding and spaced apart heat radiating fins **108** which define air vents **110** that function in a similar manner as the vents **104**. The sizing of the vents can depend on the quantity of air flow therethough. While the present embodiment illustrates a plurality of discrete vents surrounding a portion of the connector ports, it is within the spirit and scope of the present invention to have a single opening completely surrounding all or part of the connector ports. While the vents are, preferably, positioned over the optical subassembly end of the module which is generally warmer, the vents could be positioned adjacent the proximal end of the module. Moreover, the present invention contemplates that the vents can have other configurations. For example, instead of each vent having a rectangular configuration, other geometric configurations can be used. The retainer cover member **92** includes a hood portion **112** that encloses the optical couplers and serves to reduce the EMI as well as enhance heat transfer in this region of the module.

Reference is now made to the electromagnetic interference assembly or unit **36** that releasably retains the distal end of the module in the opening **24** and serves as a shield against EMI emissions. In this embodiment, the electromagnetic interference assembly or unit **36** comprises an integral construction having a generally rectangular frame **116** defining a corresponding opening **118** sized to receive slidably therein one end of the module. A plurality of spaced apart and flexibly resilient retaining tabs **120** extend from the frame **116** and are bent so that their distal ends face rearwardly. The tabs **120** are adapted to engage the wall for releasably retaining the module thereto, whereby portions of the carrier member, the retainer as well as the electromagnetic interference assembly are external relative to the wall so as to be even better exposed to cooler ambient air. As a result, an even better heat sink relationship is formed which operates at temperatures lower than those heat sink portions of the module mounted within the wall opening. The electromagnetic interference assembly is coupled to at least peripheral portions of the second set of structures and at least peripheral portions of the first end portion of the carrier member for releasably coupling the optical transceiver to the wall opening.

A screen assembly **122** is integrally coupled to the frame **116** in a flexibly resilient manner and is biased in a given angular orientation to the frame for shielding the wall opening, an end of the transceiver, and the vents. The screen assembly **122** includes a plurality of generally circular openings or vents **124** that are sized and spaced for controlling electromagnetic interference emissions and for allowing air flow to the vents **104** and **110** to allow the passage of air over the surface of the module. When the electromagnetic interference unit **36** is slid over the module the screen assembly **122** bends slightly due to inherent biasing thereof relative to the retainer member **92** to place its openings or vents **124** at an oblique angular orientation, such as shown, relative to a vertical plane containing the vents **104** and **110**. The oblique orientation of the screen assembly **122** facilitates a presentation of a greater number of the vents **124** in the path of the air passing through the vents **104** and **110**; in comparison to the number of vents presented if they are generally parallel to a vertical plane including the vents **104** and **110**. The size of each vent **124** is such as to not only facilitate air flow, but also limit EMI emissions. In this embodiment, the each of the vents **124** has a diameter size of about 2 mm to about 3 mm. Other sizes are contemplated, such as 3 mm to about 6 mm. The screen assembly **122** does not have an opening over the portion thereof that is in overlying relationship to the hood portion **112**. The screen assembly **122** has lateral flaps **126** that are joined to the sides of the carrier member **28**. The electromagnetic interference unit **36** is, preferably, an integral piece that is made of aluminum plated with a nickel silver as are the other components of the module for heat dissipation and EMI reasons. While a screen assembly is shown, EMI blocking can be accomplished with a solid member covering the vents **104** and **110**. Also, the screen need not be at an oblique angle but can be placed parallel to a vertical plane containing the vents **104** and **110**. While the retainer and the screen unit are two pieces, the present invention contemplates that they can be one unit.

Accordingly, there is provided a method of cooling an optical transceiver that is mountable to an opening in a wall. The method comprises the steps of: providing an optical transceiver having at least one end portion that is insertable within the wall opening; and, ventilating ambient air over a major portion of the transceiver by mounting the one end portion to a wall so that at least one vent is formed within confines of the wall opening which allows air to pass therethrough and over the transceiver. Ventilating can be achieved passively or with the use of circulating devices (not shown) within the data transfer system.

The embodiments and examples set forth herein were presented to best explain the present invention and its practical application and to thereby enable those skilled in the art to make and use the invention. However, those skilled in the art will recognize that the foregoing description and examples have been presented for the purposes of illustration and example only. The description set forth is not intended to be exhaustive or to limit the invention to the precise forms disclosed. Many modifications and variations are possible in light of the above teachings without departing from the spirit and scope of the appended claims.

What is claimed is:

1. A method of cooling an optical transceiver that is mountable in a wall opening of a data transfer system, said method comprising the steps of:

providing an optical transceiver having a form factor and having an end portion that is insertable within a wall opening in a wall forming a portion of an enclosure for a data transfer system, said wall opening having a form factor corresponding to said form factor of said optical transceiver and designed to receive said optical transceiver, at least a portion of said optical transceiver being positioned within the interior of said data transfer system when said end portion is inserted in said wall opening; and

ventilating ambient air over a major surface portion of the optical transceiver by mounting said end portion to the wall opening so that at least one vent is formed within confines of the wall opening, said at least one vent allowing air to pass therethrough between the exterior of said enclosure and the interior of said enclosure, and over the major surface portion of the optical transceiver located within the interior of said enclosure.

2. The method of cooling as set forth in claim **1** further comprising the step of: shielding the optical transceiver, the vent, and the wall opening from electromagnetic interference.

3. The method of cooling as set forth in claim **2** further comprising the steps of:

providing the optical transceiver with at least one connector port at the one end portion and

providing the vent adjacent to and at least partially surrounding the connector port.

4. The method of cooling as set forth in claim **1**, wherein said step of ventilating ambient air comprises ventilating ambient air over said major surface portion using at least one air circulating device mounted within said data transfer system.

5. A method of cooling a data transfer system in combination with an optical transceiver, said method comprising the steps of:

providing an optical transceiver having a form factor and having an end portion that is insertable within a wall opening in a wall forming a portion of an enclosure defining an interior space of said data transfer system, said wall opening having a form factor corresponding to said form factor of said optical transceiver and designed to receive said optical transceiver, at least a portion of said optical transceiver being positioned within the interior of said data transfer system when said end portion is inserted in said wall opening; and

ventilating ambient air over a major surface portion of the optical transceiver by mounting said end portion to the wall opening so that at least one vent is formed within confines of the wall opening which allows air to pass therethrough and over the transceiver, said air passing between said interior space of said data transfer system and ambient space external to said enclosure defining said interior space of said data transfer system, whereby the transceiver and internals of the data transfer system are cooled.

6. The method of cooling as set forth in claim **5** further comprising the step of:

shielding the optical transceiver end portion, the vent, and the wall opening from electromagnetic interference.

7. The method of cooling as set forth in claim **5**, wherein said step of ventilating ambient air comprises ventilating ambient air over said major surface portion using at least one air circulating device mounted within said data transfer system.

* * * * *