US011080001B2

(12) **United States Patent**
Millington

(10) **Patent No.: US 11,080,001 B2**
(45) **Date of Patent: Aug. 3, 2021**

(54) **CONCURRENT TRANSMISSION AND PLAYBACK OF AUDIO INFORMATION**

(71) Applicant: **SONOS, INC.**, Santa Barbara, CA (US)

(72) Inventor: **Nicholas A. J. Millington**, Santa Barbara, CA (US)

(73) Assignee: **Sonos, Inc.**, Santa Barbara, CA (US)

(*) Notice: Subject to any disclaimer, the term of this patent is extended or adjusted under 35 U.S.C. 154(b) by 708 days.

(21) Appl. No.: **13/864,249**

(22) Filed: **Apr. 17, 2013**

(65) **Prior Publication Data**

US 2013/0238108 A1 Sep. 12, 2013

Related U.S. Application Data

(63) Continuation of application No. 13/297,000, filed on Nov. 15, 2011, now Pat. No. 9,182,777, which is a (Continued)

(51) **Int. Cl.**
G06F 15/16 (2006.01)
G06F 3/16 (2006.01)
(Continued)

(52) **U.S. Cl.**
CPC ***G06F 3/165*** (2013.01); ***G05B 15/02*** (2013.01); ***G06F 1/00*** (2013.01); ***G06F 1/12*** (2013.01);
(Continued)

(58) **Field of Classification Search**
CPC G06F 3/167; G06F 17/00; G06F 17/3074; G06F 3/048; G06F 3/0482; G06F 3/0484;
(Continued)

(56) **References Cited**

U.S. PATENT DOCUMENTS

3,956,591 A 5/1976 Gates, Jr.
4,105,974 A 8/1978 Rogers
(Continued)

FOREIGN PATENT DOCUMENTS

CA 2320451 A1 9/2000
CA 2320451 A1 3/2001
(Continued)

OTHER PUBLICATIONS

"Advisory Action dated Mar. 25, 2015, issued in connection with U.S. Appl. No. 13/533,105, filed Jun. 26, 2012, 5 pages."
(Continued)

Primary Examiner — Oleg Survillo
(74) *Attorney, Agent, or Firm* — Akerman LLP

(57) **ABSTRACT**

In a network comprising a plurality of synchrony groups, including at least a first synchrony group and a second synchrony group, wherein a first zone player is a member of the first synchrony group and a second zone player is a member of the second synchrony group, a method comprising: transmitting, by the first zone player while the first zone player is playing a first audio information, a second audio information to the second zone player, wherein the second audio information is different from the first audio information; and playing, by the second synchrony group, the second audio information while the first synchrony group is playing the first audio information.

33 Claims, 5 Drawing Sheets

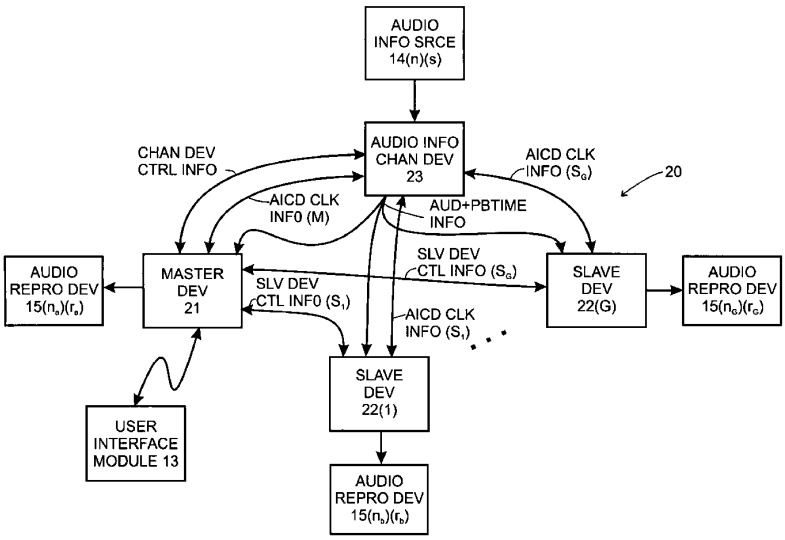

Related U.S. Application Data

continuation of application No. 10/816,217, filed on Apr. 1, 2004, now Pat. No. 8,234,395.

(60) Provisional application No. 60/490,768, filed on Jul. 28, 2003.

(51) **Int. Cl.**

H04N 21/43	(2011.01)
H04N 21/436	(2011.01)
H04L 29/06	(2006.01)
G06F 16/60	(2019.01)
G06F 16/63	(2019.01)
G06F 16/638	(2019.01)
G06F 16/68	(2019.01)
G06F 16/23	(2019.01)
G06F 16/635	(2019.01)
G05B 15/02	(2006.01)
G06F 1/00	(2006.01)
G06F 1/12	(2006.01)
G06F 3/048	(2013.01)
G06F 3/0482	(2013.01)
G06F 3/0484	(2013.01)
G06F 17/00	(2019.01)
H03G 3/00	(2006.01)
H03G 3/20	(2006.01)
H04L 12/28	(2006.01)
H04L 29/08	(2006.01)
H04W 84/20	(2009.01)
H04J 3/06	(2006.01)
H04R 27/00	(2006.01)
H04R 3/12	(2006.01)
H04H 20/10	(2008.01)
H04H 20/26	(2008.01)
G11B 20/10	(2006.01)
H04N 5/04	(2006.01)
H04N 9/79	(2006.01)
H04W 56/00	(2009.01)

(52) **U.S. Cl.**

CPC ***G06F 3/048*** (2013.01); ***G06F 3/0482*** (2013.01); ***G06F 3/0484*** (2013.01); ***G06F 3/04842*** (2013.01); ***G06F 3/04847*** (2013.01); ***G06F 3/16*** (2013.01); ***G06F 3/162*** (2013.01); ***G06F 3/167*** (2013.01); ***G06F 16/2322*** (2019.01); ***G06F 16/60*** (2019.01); ***G06F 16/63*** (2019.01); ***G06F 16/635*** (2019.01); ***G06F 16/638*** (2019.01); ***G06F 16/639*** (2019.01); ***G06F 16/68*** (2019.01); ***G06F 17/00*** (2013.01); ***G11B 20/10527*** (2013.01); ***H03G 3/00*** (2013.01); ***H03G 3/20*** (2013.01); ***H04H 20/103*** (2013.01); ***H04H 20/26*** (2013.01); ***H04J 3/0644*** (2013.01); ***H04J 3/0664*** (2013.01); ***H04L 12/2854*** (2013.01); ***H04L 65/1069*** (2013.01); ***H04L 65/4069*** (2013.01); ***H04L 65/4076*** (2013.01); ***H04L 65/4084*** (2013.01); ***H04L 65/4092*** (2013.01); ***H04L 65/60*** (2013.01); ***H04L 65/601*** (2013.01); ***H04L 65/80*** (2013.01); ***H04L 67/1095*** (2013.01); ***H04L 67/12*** (2013.01); ***H04L 67/26*** (2013.01); ***H04L 69/28*** (2013.01); ***H04N 5/04*** (2013.01); ***H04N 9/7904*** (2013.01); ***H04N 21/4307*** (2013.01); ***H04N 21/43615*** (2013.01); ***H04R 3/12*** (2013.01); ***H04R 27/00*** (2013.01); ***H04W 56/0015*** (2013.01); ***H04W 84/20*** (2013.01); ***H05K 999/99*** (2013.01); *G11B 2020/10592* (2013.01); *H04H 2201/20* (2013.01); *H04R 2227/003* (2013.01); *H04R 2227/005* (2013.01)

(58) **Field of Classification Search**

CPC . G06F 3/126; G06F 3/16; H04L 65/60; H04L 12/2812

USPC 709/219, 220, 231

See application file for complete search history.

(56) **References Cited**

U.S. PATENT DOCUMENTS

D260,764	S	9/1981	Castagna et al.
4,296,278	A	10/1981	Cullison et al.
4,306,114	A	12/1981	Callahan
4,310,922	A	1/1982	Lichtenberger et al.
4,509,211	A	4/1985	Robbins
D279,779	S	7/1985	Taylor
4,530,091	A	7/1985	Crockett
4,661,902	A	4/1987	Hochsprung et al.
4,689,786	A	8/1987	Sidhu et al.
4,696,037	A	9/1987	Fierens
4,701,629	A	10/1987	Citroen
4,712,105	A	12/1987	Kohler
D293,671	S	1/1988	Beaumont
4,731,814	A	3/1988	Becker et al.
4,816,989	A	3/1989	Finn et al.
4,824,059	A	4/1989	Butler
D301,037	S	5/1989	Matsuda
4,845,751	A	7/1989	Schwab
D304,443	S	11/1989	Grinyer et al.
D313,023	S	12/1990	Kolenda et al.
D313,398	S	1/1991	Gilchrist
D313,600	S	1/1991	Weber
4,994,908	A	2/1991	Kuban et al.
D320,598	S	10/1991	Auerbach et al.
D322,609	S	12/1991	Patton
5,086,385	A	2/1992	Launey et al.
D326,450	S	5/1992	Watanabe
D327,060	S	6/1992	Wachob et al.
5,151,922	A	9/1992	Weiss
5,153,579	A	10/1992	Fisch et al.
D331,388	S	12/1992	Dahnert et al.
5,182,552	A	1/1993	Paynting
D333,135	S	2/1993	Wachob et al.
5,185,680	A	2/1993	Kakubo
5,198,603	A	3/1993	Nishikawa et al.
5,237,327	A	8/1993	Saitoh et al.
5,239,458	A	8/1993	Suzuki
5,272,757	A	12/1993	Scofield et al.
5,299,266	A	3/1994	Lumsden
5,313,524	A	5/1994	Van Hulle et al.
D350,531	S	9/1994	Tsuji
D350,962	S	9/1994	Reardon et al.
5,361,381	A	11/1994	Short
5,372,441	A	12/1994	Louis
D354,059	S	1/1995	Hendricks
D354,751	S	1/1995	Hersh et al.
D356,093	S	3/1995	McCauley et al.
D356,312	S	3/1995	Althans
D357,024	S	4/1995	Tokiyama et al.
5,406,634	A	4/1995	Anderson et al.
5,430,485	A	7/1995	Lankford et al.
5,440,644	A	8/1995	Farinelli et al.
D362,446	S	9/1995	Gasiorek et al.
5,457,448	A	10/1995	Totsuka et al.
D363,933	S	11/1995	Starck
5,467,342	A	11/1995	Logston et al.
D364,877	S	12/1995	Tokiyama et al.
D364,878	S	12/1995	Green et al.
D365,102	S	12/1995	Gioscia
D366,044	S	1/1996	Hara et al.
5,481,251	A	1/1996	Buys et al.
5,491,839	A	2/1996	Schotz
5,515,345	A	5/1996	Barreira et al.
5,533,021	A	7/1996	Branstad et al.

(56) **References Cited**

U.S. PATENT DOCUMENTS

D372,716	S	8/1996	Thorne, III
5,553,147	A	9/1996	Pineau
5,553,222	A	9/1996	Milne et al.
5,553,314	A	9/1996	Grube et al.
D377,651	S	1/1997	Biasotti et al.
5,596,696	A	1/1997	Tindell et al.
5,602,992	A	2/1997	Danneels
5,623,483	A	4/1997	Agrawal et al.
5,625,350	A	4/1997	Fukatsu et al.
5,633,871	A	5/1997	Bloks
D379,816	S	6/1997	Laituri et al.
5,636,345	A	6/1997	Valdevit
5,640,388	A	6/1997	Woodhead et al.
5,642,171	A	6/1997	Baumgartner et al.
D380,752	S	7/1997	Hanson
5,652,749	A	7/1997	Davenport et al.
D382,271	S	8/1997	Akwiwu
5,661,665	A	8/1997	Glass et al.
5,661,728	A	8/1997	Finotello et al.
5,668,884	A	9/1997	Clair, Jr. et al.
5,673,323	A	9/1997	Schotz et al.
D384,940	S	10/1997	Kono et al.
D387,352	S	12/1997	Kaneko et al.
5,696,896	A	12/1997	Badovinatz et al.
D388,792	S	1/1998	Nykerk
D389,143	S	1/1998	Wicks
D392,641	S	3/1998	Fenner
5,726,989	A	3/1998	Dokic
5,732,059	A	3/1998	Katsuyama et al.
D393,628	S	4/1998	Ledbetter et al.
5,740,235	A	4/1998	Lester et al.
5,742,623	A	4/1998	Nuber et al.
D394,659	S	5/1998	Biasotti et al.
5,751,819	A	5/1998	Dorrough
5,761,320	A	6/1998	Farinelli et al.
5,774,016	A	6/1998	Ketterer
D395,889	S	7/1998	Gerba et al.
5,787,249	A	7/1998	Badovinatz et al.
5,790,543	A	8/1998	Cloutier
D397,996	S	9/1998	Smith
5,808,662	A	9/1998	Kinney et al.
5,812,201	A	9/1998	Yoo
5,815,689	A	9/1998	Shaw et al.
5,818,948	A	10/1998	Gulick
D401,587	S	11/1998	Rudolph
5,832,024	A	11/1998	Schotz et al.
5,838,909	A	11/1998	Roy et al.
5,848,152	A	12/1998	Slipy et al.
5,852,722	A	12/1998	Hamilton
5,852,744	A	12/1998	Agatone et al.
D404,741	S	1/1999	Schumaker et al.
D405,071	S	2/1999	Gambaro
5,867,691	A	2/1999	Shiraishi
5,875,233	A	2/1999	Cox
5,875,354	A	2/1999	Charlton et al.
D406,847	S	3/1999	Gerba et al.
D407,071	S	3/1999	Keating
5,887,143	A	3/1999	Saito et al.
5,905,768	A	5/1999	Maturi et al.
D410,927	S	6/1999	Yamagishi
5,910,990	A	6/1999	Jang
5,917,830	A	6/1999	Chen et al.
D412,337	S	7/1999	Hamano
5,923,869	A	7/1999	Kashiwagi et al.
5,923,902	A	7/1999	Inagaki
5,946,343	A	8/1999	Schotz et al.
5,956,025	A	9/1999	Goulden et al.
5,956,088	A	9/1999	Shen et al.
5,960,006	A	9/1999	Maturi et al.
5,960,167	A	9/1999	Roberts et al.
D415,496	S	10/1999	Gerba et al.
D416,021	S	11/1999	Godette et al.
5,984,512	A	11/1999	Jones et al.
5,987,525	A	11/1999	Roberts et al.
5,987,611	A	11/1999	Freund
5,990,884	A	11/1999	Douma et al.
5,991,307	A	11/1999	Komuro et al.
5,999,906	A	12/1999	Mercs et al.
6,009,457	A	12/1999	Moller
6,018,376	A	1/2000	Nakatani
D420,006	S	2/2000	Tonino
6,026,150	A	2/2000	Frank et al.
6,026,297	A	2/2000	Haartsen
6,029,196	A	2/2000	Lenz
6,031,818	A	2/2000	Lo et al.
6,032,202	A	2/2000	Lea et al.
6,038,614	A	3/2000	Chan et al.
6,046,550	A	4/2000	Ference et al.
6,061,457	A	5/2000	Stockhamer
6,078,725	A	6/2000	Tanaka
6,081,266	A	6/2000	Sciammarella
6,085,236	A	7/2000	Lea
6,088,063	A	7/2000	Shiba
D429,246	S	8/2000	Holma
D430,143	S	8/2000	Renk
6,101,195	A	8/2000	Lyons et al.
6,108,485	A	8/2000	Kim
6,108,686	A	8/2000	Williams, Jr.
6,119,239	A	9/2000	Fujii
6,122,668	A	9/2000	Teng et al.
6,122,749	A	9/2000	Gulick
D431,552	S	10/2000	Backs et al.
D432,525	S	10/2000	Beecroft
6,127,941	A	10/2000	Van Ryzin
6,128,318	A	10/2000	Sato
6,131,130	A	10/2000	Van Ryzin
6,148,205	A	11/2000	Cotton
6,154,772	A	11/2000	Dunn et al.
6,157,957	A	12/2000	Berthaud
6,163,647	A	12/2000	Terashima et al.
6,169,725	B1	1/2001	Gibbs et al.
6,175,872	B1	1/2001	Neumann et al.
6,181,383	B1	1/2001	Fox et al.
6,185,737	B1	2/2001	Northcutt et al.
6,195,435	B1	2/2001	Kitamura
6,195,436	B1	2/2001	Scibora et al.
6,199,169	B1	3/2001	Voth
6,212,282	B1	4/2001	Mershon
6,246,701	B1	6/2001	Slattery
6,253,293	B1	6/2001	Rao et al.
D444,475	S	7/2001	Levey et al.
6,255,961	B1	7/2001	Van Ryzin et al.
6,256,554	B1	7/2001	DiLorenzo
6,269,406	B1	7/2001	Dutcher et al.
6,301,012	B1	10/2001	White et al.
6,308,207	B1	10/2001	Tseng et al.
6,310,652	B1	10/2001	Li et al.
6,313,879	B1	11/2001	Kubo et al.
6,321,252	B1	11/2001	Bhola et al.
6,324,586	B1	11/2001	Johnson
D452,520	S	12/2001	Gotham et al.
6,332,147	B1	12/2001	Moran et al.
6,336,219	B1	1/2002	Nathan
6,343,028	B1	1/2002	Kuwaoka
6,349,285	B1	2/2002	Liu et al.
6,349,339	B1	2/2002	Williams
6,349,352	B1	2/2002	Lea
6,351,821	B1	2/2002	Voth
6,353,172	B1	3/2002	Fay et al.
6,356,871	B1	3/2002	Hemkumar et al.
6,389,057	B1	5/2002	Haartsen
6,404,811	B1	6/2002	Cvetko et al.
6,418,150	B1	7/2002	Staats
6,430,353	B1	8/2002	Honda et al.
6,442,443	B1	8/2002	Fujii et al.
D462,339	S	9/2002	Allen et al.
D462,340	S	9/2002	Allen et al.
D462,945	S	9/2002	Skulley
6,446,080	B1	9/2002	Van Ryzin et al.
6,449,642	B2	9/2002	Bourke-Dunphy et al.
6,449,653	B2	9/2002	Klemets et al.
6,456,783	B1	9/2002	Ando et al.
6,463,474	B1	10/2002	Fuh et al.
6,466,832	B1	10/2002	Zuqert et al.

(56) **References Cited**

U.S. PATENT DOCUMENTS

6,469,633	B1	10/2002	Wachter
D466,108	S	11/2002	Glodava et al.
6,487,296	B1	11/2002	Allen et al.
6,493,832	B1	12/2002	Itakura et al.
D468,297	S	1/2003	Ikeda
6,522,886	B1	2/2003	Youngs et al.
6,526,325	B1	2/2003	Sussman et al.
6,526,411	B1	2/2003	Ward
6,535,121	B2	3/2003	Matheny
D474,763	S	5/2003	Tozaki et al.
D475,993	S	6/2003	Meyer et al.
D476,643	S	7/2003	Yamagishi
D477,310	S	7/2003	Moransais
6,587,127	B1	7/2003	Leeke et al.
6,598,172	B1	7/2003	Vandeusen et al.
D478,051	S	8/2003	Sagawa
D478,069	S	8/2003	Beck et al.
D478,896	S	8/2003	Summers
6,611,537	B1	8/2003	Edens et al.
6,611,813	B1	8/2003	Bratton
D479,520	S	9/2003	De Saulles
D481,056	S	10/2003	Kawasaki et al.
6,631,410	B1	10/2003	Kowalski et al.
6,636,269	B1	10/2003	Baldwin
6,639,584	B1	10/2003	Li
6,653,899	B2	11/2003	Organvidez et al.
6,654,720	B1	11/2003	Graham et al.
6,654,956	B1	11/2003	Trinh et al.
6,658,091	B1	12/2003	Naidoo et al.
6,674,803	B1	1/2004	Kesselring
6,684,060	B1	1/2004	Curtin
D486,145	S	2/2004	Kaminski et al.
6,687,664	B1	2/2004	Sussman et al.
6,703,940	B1	3/2004	Allen et al.
6,704,421	B1	3/2004	Kitamura
6,732,176	B1	5/2004	Stewart et al.
6,741,708	B1	5/2004	Nakatsugawa
6,741,961	B2	5/2004	Lim
D491,925	S	6/2004	Griesau et al.
6,757,517	B2	6/2004	Chang
D493,148	S	7/2004	Shibata et al.
6,763,274	B1	7/2004	Gilbert
D495,333	S	8/2004	Borsboom
6,772,267	B2	8/2004	Thaler et al.
6,775,246	B1	8/2004	Kuribayashi et al.
6,778,073	B2	8/2004	Lutter et al.
6,778,493	B1	8/2004	Ishii
6,778,869	B2	8/2004	Champion
D496,003	S	9/2004	Spira
D496,005	S	9/2004	Wang
D496,335	S	9/2004	Spira
6,788,938	B1	9/2004	Sugaya et al.
6,795,852	B1	9/2004	Kleinrock et al.
D497,363	S	10/2004	Olson et al.
6,803,964	B1	10/2004	Post et al.
6,809,635	B1	10/2004	Kaaresoja
D499,086	S	11/2004	Polito
6,816,104	B1	11/2004	Lin
6,816,510	B1	11/2004	Banerjee
6,816,818	B2	11/2004	Wolf et al.
6,823,225	B1	11/2004	Sass
6,826,283	B1	11/2004	Wheeler et al.
D499,395	S	12/2004	Hsu
D499,718	S	12/2004	Chen
D500,015	S	12/2004	Gubbe
6,836,788	B2	12/2004	Kim et al.
6,839,752	B1	1/2005	Miller et al.
D501,477	S	2/2005	Hall
6,859,460	B1	2/2005	Chen
6,859,538	B1	2/2005	Voltz
6,873,862	B2	3/2005	Reshefsky
6,882,335	B2	4/2005	Saarinen
D504,872	S	5/2005	Uehara et al.
D504,885	S	5/2005	Zhang et al.
6,898,642	B2	5/2005	Chafle et al.
6,901,439	B1	5/2005	Bonasia et al.
D506,463	S	6/2005	Daniels
6,907,458	B2	6/2005	Tomassetti et al.
6,910,078	B1	6/2005	Raman et al.
6,912,610	B2	6/2005	Spencer
6,915,347	B2	7/2005	Hanko et al.
6,917,592	B1	7/2005	Ramankutty et al.
6,919,771	B2	7/2005	Nakajima
6,920,373	B2	7/2005	Xi et al.
6,931,557	B2	8/2005	Togawa
6,934,300	B2	8/2005	Tomassetti et al.
6,934,766	B1	8/2005	Russell
6,937,988	B1	8/2005	Hemkumar et al.
6,950,666	B2	9/2005	Asakawa
6,965,948	B1	11/2005	Eneborg et al.
6,970,481	B2	11/2005	Gray, III et al.
6,970,482	B2	11/2005	Kim
6,981,259	B2	12/2005	Luman et al.
6,985,694	B1	1/2006	De Bonet et al.
6,987,767	B2	1/2006	Saito
6,993,570	B1	1/2006	Irani
D515,072	S	2/2006	Lee
D515,557	S	2/2006	Okuley
7,006,758	B1	2/2006	Yamamoto et al.
7,007,106	B1	2/2006	Flood et al.
7,020,791	B1	3/2006	Aweya et al.
D518,475	S	4/2006	Yang et al.
7,043,477	B2	5/2006	Mercer et al.
7,043,651	B2	5/2006	Aweya et al.
7,046,677	B2	5/2006	Monta et al.
7,047,308	B2	5/2006	Deshpande
7,054,888	B2	5/2006	Lachapelle et al.
7,058,889	B2	6/2006	Trovato et al.
7,068,596	B1	6/2006	Mou
D524,296	S	7/2006	Kita
7,076,204	B2	7/2006	Richenstein et al.
D527,375	S	8/2006	Flora et al.
7,089,333	B2	8/2006	Marinescu et al.
7,092,528	B2	8/2006	Patrick et al.
7,092,694	B2	8/2006	Griep et al.
7,095,947	B2	8/2006	Van der Schaar
7,096,169	B2	8/2006	Crutchfield, Jr.
7,102,513	B1	9/2006	Taskin et al.
7,106,224	B2	9/2006	Knapp et al.
7,107,442	B2	9/2006	Cheshire
7,113,999	B2	9/2006	Pestoni et al.
7,115,017	B1	10/2006	Laursen et al.
7,120,168	B2	10/2006	Zimmermann
7,123,731	B2	10/2006	Cohen et al.
7,130,316	B2	10/2006	Kovacevic
7,130,368	B1	10/2006	Aweya et al.
7,130,608	B2	10/2006	Hollstrom et al.
7,130,616	B2	10/2006	Janik
7,136,934	B2	11/2006	Carter et al.
7,139,981	B2	11/2006	Mayer et al.
7,143,141	B1	11/2006	Morgan et al.
7,143,939	B2	12/2006	Henzerling
7,146,260	B2	12/2006	Preston et al.
7,158,488	B2	1/2007	Fujimori
7,158,783	B2	1/2007	Eguchi
7,161,939	B2	1/2007	Israel et al.
7,162,315	B2	1/2007	Gilbert
7,164,694	B1	1/2007	Nodoushani et al.
7,167,765	B2	1/2007	Janik
7,174,157	B2	2/2007	Gassho et al.
7,184,774	B2	2/2007	Robinson et al.
7,185,090	B2	2/2007	Kowalski et al.
7,187,947	B1	3/2007	White et al.
7,188,353	B1	3/2007	Crinon
7,197,148	B2	3/2007	Nourse et al.
7,206,367	B1	4/2007	Moore
7,206,618	B2	4/2007	Latto et al.
7,206,967	B1	4/2007	Marti et al.
7,209,795	B2	4/2007	Sullivan et al.
7,215,649	B2	5/2007	Yu et al.
7,218,708	B2	5/2007	Berezowski et al.
7,218,930	B2	5/2007	Ko et al.
7,236,739	B2	6/2007	Chang
7,236,773	B2	6/2007	Thomas

(56) **References Cited**

U.S. PATENT DOCUMENTS

7,246,374	B1	7/2007	Simon et al.
7,251,533	B2	7/2007	Yoon et al.
7,257,398	B1	8/2007	Ukita et al.
7,260,616	B1	8/2007	Cook
7,263,070	B1	8/2007	Delker et al.
7,263,110	B2	8/2007	Fujishiro
7,269,338	B2	9/2007	Janevski
7,274,761	B2	9/2007	Muller et al.
7,275,156	B2	9/2007	Balfanz et al.
7,277,547	B1	10/2007	Delker et al.
7,286,652	B1	10/2007	Azriel et al.
7,289,631	B2	10/2007	Ishidoshiro
7,293,060	B2	11/2007	Komsi
7,295,548	B2	11/2007	Blank et al.
7,305,694	B2	12/2007	Commons et al.
7,308,188	B2	12/2007	Namatame
7,308,489	B2	12/2007	Weast
7,310,334	B1	12/2007	Fitzgerald et al.
7,312,785	B2	12/2007	Tsuk et al.
7,313,384	B1	12/2007	Meenan et al.
7,313,593	B1	12/2007	Pulito et al.
7,319,764	B1	1/2008	Reid et al.
7,324,857	B2	1/2008	Goddard
7,330,875	B1	2/2008	Parasnis et al.
7,333,519	B2	2/2008	Sullivan et al.
7,356,011	B1	4/2008	Waters et al.
7,359,006	B1	4/2008	Xiang et al.
7,363,363	B2	4/2008	Dal Canto et al.
7,366,206	B2	4/2008	Lockridge et al.
7,372,846	B2	5/2008	Zwack
7,376,834	B2	5/2008	Edwards et al.
7,383,036	B2	6/2008	Kang et al.
7,391,791	B2	6/2008	Balassanian et al.
7,392,102	B2	6/2008	Sullivan et al.
7,392,387	B2	6/2008	Balfanz et al.
7,392,481	B2	6/2008	Gewickey et al.
7,394,480	B2	7/2008	Song
7,400,644	B2	7/2008	Sakamoto et al.
7,400,732	B2	7/2008	Staddon et al.
7,412,499	B2	8/2008	Chang et al.
7,428,310	B2	9/2008	Park
7,430,181	B1	9/2008	Hong
7,433,324	B2	10/2008	Switzer et al.
7,434,166	B2	10/2008	Acharya et al.
7,454,619	B2	11/2008	Smetters et al.
7,457,948	B1	11/2008	Bilicksa et al.
7,469,139	B2	12/2008	Van De Groenendaal
7,472,058	B2	12/2008	Tseng et al.
7,474,677	B2	1/2009	Trott
7,483,538	B2	1/2009	McCarty et al.
7,483,540	B2	1/2009	Rabinowitz et al.
7,483,958	B1	1/2009	Elabbady et al.
7,492,912	B2	2/2009	Chung et al.
7,505,889	B2	3/2009	Salmonsen et al.
7,509,181	B2	3/2009	Champion
7,519,667	B1	4/2009	Capps
7,532,862	B2	5/2009	Cheshire
7,548,744	B2	6/2009	Oesterling et al.
7,548,851	B1	6/2009	Lau et al.
7,558,224	B1	7/2009	Surazski et al.
7,558,635	B1	7/2009	Thiel et al.
7,561,697	B2	7/2009	Harris
7,571,014	B1	8/2009	Lambourne et al.
7,574,274	B2	8/2009	Holmes
7,581,096	B2	8/2009	Balfanz et al.
7,599,685	B2	10/2009	Goldberg et al.
7,606,174	B2	10/2009	Ochi et al.
7,607,091	B2	10/2009	Song et al.
7,627,825	B2	12/2009	Kakuda
7,630,501	B2	12/2009	Blank et al.
7,631,119	B2	12/2009	Moore et al.
7,634,093	B2	12/2009	McGrath
7,643,894	B2	1/2010	Braithwaite et al.
7,653,344	B1	1/2010	Feldman et al.
7,657,224	B2	2/2010	Goldberg et al.
7,657,255	B2	2/2010	Abel et al.
7,657,644	B1	2/2010	Zheng
7,657,910	B1	2/2010	McAulay et al.
7,665,115	B2	2/2010	Gallo et al.
7,668,990	B2	2/2010	Krzyzanowski et al.
7,669,113	B1	2/2010	Moore et al.
7,669,219	B2	2/2010	Scott, III
7,672,470	B2	3/2010	Lee
7,675,943	B2	3/2010	Mosig
7,676,044	B2	3/2010	Sasaki et al.
7,676,142	B1	3/2010	Hung
7,688,306	B2	3/2010	Wehrenberg et al.
7,689,304	B2	3/2010	Sasaki
7,689,305	B2	3/2010	Kreifeldt et al.
7,690,017	B2	3/2010	Stecyk et al.
7,702,279	B2	4/2010	Ko et al.
7,702,403	B1	4/2010	Gladwin et al.
7,710,941	B2	5/2010	Rietschel
7,711,774	B1	5/2010	Rothschild
7,716,375	B2	5/2010	Blum et al.
7,720,096	B2	5/2010	Klemets
7,721,032	B2	5/2010	Bushell et al.
7,742,740	B2	6/2010	Goldberg et al.
7,743,009	B2	6/2010	Hangartner et al.
7,746,906	B2	6/2010	Jinzaki et al.
7,752,329	B1	7/2010	Meenan et al.
7,756,743	B1	7/2010	Lapcevic
7,757,076	B2	7/2010	Stewart et al.
7,761,176	B2	7/2010	Ben-Yaacov et al.
7,765,315	B2	7/2010	Batson et al.
RE41,608	E	8/2010	Blair et al.
7,792,311	B1	9/2010	Holmgren et al.
7,793,206	B2	9/2010	Lim et al.
7,827,259	B2	11/2010	Heller et al.
7,831,054	B2	11/2010	Ball et al.
7,835,689	B2	11/2010	Goldberg et al.
7,853,341	B2	12/2010	McCarty et al.
7,865,137	B2	1/2011	Goldberg et al.
7,882,234	B2	2/2011	Watanabe et al.
7,885,622	B2	2/2011	Krampf et al.
7,899,656	B2	3/2011	Crutchfield, Jr.
7,904,720	B2	3/2011	Smetters et al.
7,907,736	B2	3/2011	Yuen et al.
7,907,819	B2	3/2011	Ando et al.
7,916,861	B2	3/2011	Conley et al.
7,916,877	B2	3/2011	Goldberg et al.
7,917,082	B2	3/2011	Goldberg et al.
7,933,418	B2	4/2011	Morishima
7,934,239	B1	4/2011	Dagman
7,937,089	B2	5/2011	Smetters et al.
7,937,752	B2	5/2011	Balfanz et al.
7,945,143	B2	5/2011	Yahata et al.
7,945,636	B2	5/2011	Nelson et al.
7,945,708	B2	5/2011	Ohkita
7,958,441	B2	6/2011	Heller et al.
7,966,388	B1	6/2011	Pugaczewski et al.
7,987,294	B2	7/2011	Bryce et al.
7,995,732	B2	8/2011	Koch et al.
7,996,566	B1	8/2011	Sylvain et al.
7,996,588	B2	8/2011	Subbiah et al.
8,014,423	B2	9/2011	Thaler et al.
8,015,306	B2	9/2011	Bowman
8,020,023	B2	9/2011	Millington et al.
8,023,663	B2	9/2011	Goldberg
8,028,038	B2	9/2011	Weel
8,028,323	B2	9/2011	Weel
8,041,062	B2	10/2011	Cohen et al.
8,045,721	B2	10/2011	Burgan et al.
8,045,952	B2	10/2011	Qureshey et al.
8,050,203	B2	11/2011	Jacobsen et al.
8,050,652	B2	11/2011	Qureshey et al.
8,055,364	B2	11/2011	Champion
8,074,253	B1	12/2011	Nathan
8,086,752	B2	12/2011	Millington et al.
8,090,317	B2	1/2012	Burge et al.
8,103,009	B2	1/2012	McCarty et al.
8,111,132	B2	2/2012	Allen et al.
8,112,032	B2	2/2012	Ko et al.
8,116,476	B2	2/2012	Inohara

(56) **References Cited**

U.S. PATENT DOCUMENTS

8,126,172	B2	2/2012	Horbach et al.
8,131,389	B1 *	3/2012	Hardwick G11B 27/002 700/94
8,131,390	B2	3/2012	Braithwaite et al.
8,134,650	B2	3/2012	Maxson et al.
8,144,883	B2	3/2012	Pdersen et al.
8,148,622	B2	4/2012	Rothkopf et al.
8,150,079	B2	4/2012	Maeda et al.
8,156,337	B2	4/2012	Balfanz et al.
8,169,938	B2	5/2012	Duchscher et al.
8,170,222	B2	5/2012	Dunko
8,170,260	B2	5/2012	Reining et al.
8,175,297	B1	5/2012	Ho et al.
8,185,674	B2	5/2012	Moore et al.
8,194,874	B2	6/2012	Starobin et al.
8,204,890	B1	6/2012	Gogan
8,208,653	B2	6/2012	Eo et al.
8,214,447	B2	7/2012	Deslippe et al.
8,214,740	B2	7/2012	Johnson
8,214,873	B2	7/2012	Weel
8,218,790	B2	7/2012	Bull et al.
8,230,099	B2	7/2012	Weel
8,233,029	B2	7/2012	Yoshida et al.
8,233,648	B2	7/2012	Sorek et al.
8,234,305	B2	7/2012	Seligmann et al.
8,234,395	B2	7/2012	Millington
8,239,748	B1	8/2012	Moore et al.
8,250,218	B2	8/2012	Watanabe et al.
8,275,910	B1	9/2012	Hauck
8,279,709	B2	10/2012	Choisel et al.
8,281,001	B2	10/2012	Busam et al.
8,285,404	B1	10/2012	Kekki
8,290,603	B1	10/2012	Lambourne
8,300,845	B2	10/2012	Zurek et al.
8,311,226	B2	11/2012	Lorgeoux et al.
8,315,555	B2	11/2012	Ko et al.
8,316,147	B2	11/2012	Batson et al.
8,325,931	B2	12/2012	Howard et al.
8,326,951	B1	12/2012	Millington et al.
8,340,330	B2	12/2012	Yoon et al.
8,345,709	B2	1/2013	Nitzpon et al.
8,364,295	B2	1/2013	Beckmann et al.
8,370,678	B2	2/2013	Millington et al.
8,374,595	B2	2/2013	Chien et al.
8,407,623	B2	3/2013	Kerr et al.
8,411,883	B2	4/2013	Matsumoto
8,417,827	B2	4/2013	Anttila et al.
8,423,659	B2	4/2013	Millington
8,423,893	B2	4/2013	Ramsay et al.
8,432,851	B2	4/2013	Xu et al.
8,433,076	B2	4/2013	Zurek et al.
8,442,239	B2	5/2013	Bruelle-Drews
8,457,334	B2	6/2013	Yoon et al.
8,463,184	B2	6/2013	Dua
8,463,875	B2	6/2013	Katz et al.
8,477,958	B2	7/2013	Moeller et al.
8,483,853	B1	7/2013	Lambourne
8,509,211	B2	8/2013	Trotter et al.
8,509,463	B2	8/2013	Goh et al.
8,515,389	B2	8/2013	Smetters et al.
8,520,870	B2	8/2013	Sato et al.
8,565,455	B2	10/2013	Worrell et al.
8,577,048	B2	11/2013	Chaikin et al.
8,588,949	B2	11/2013	Lambourne et al.
8,600,084	B1	12/2013	Garrett
8,601,394	B2	12/2013	Sheehan et al.
8,611,559	B2	12/2013	Sanders
8,615,091	B2	12/2013	Terwal
8,639,830	B2	1/2014	Bowman
8,654,995	B2	2/2014	Silber et al.
8,672,744	B1	3/2014	Gronkowski et al.
8,683,009	B2	3/2014	Ng et al.
8,688,431	B2	4/2014	Lyons et al.
8,689,036	B2	4/2014	Millington et al.
8,731,206	B1	5/2014	Park
8,750,282	B2	6/2014	Gelter et al.
8,751,026	B2	6/2014	Sato et al.
8,762,565	B2	6/2014	Togashi et al.
8,768,252	B2	7/2014	Watson et al.
8,797,926	B2	8/2014	Kearney, III et al.
8,818,538	B2	8/2014	Sakata
8,819,554	B2	8/2014	Basso et al.
8,831,761	B2	9/2014	Kemp et al.
8,843,586	B2	9/2014	Pantos et al.
8,861,739	B2	10/2014	Ojanpera
8,868,698	B2	10/2014	Millington et al.
8,885,851	B2	11/2014	Westenbroek
8,904,066	B2	12/2014	Moore et al.
8,917,877	B2	12/2014	Haaff et al.
8,930,006	B2	1/2015	Haatainen
8,934,647	B2	1/2015	Joyce et al.
8,934,655	B2	1/2015	Breen et al.
8,938,637	B2	1/2015	Millington et al.
8,942,252	B2	1/2015	Balassanian et al.
8,942,395	B2	1/2015	Lissaman et al.
8,954,177	B2	2/2015	Sanders
8,965,544	B2	2/2015	Ramsay
8,966,394	B2	2/2015	Gates et al.
9,014,833	B2	4/2015	Goh et al.
9,078,281	B2	7/2015	Matsuda et al.
9,130,770	B2	9/2015	Millington et al.
9,137,602	B2	9/2015	Mayman et al.
9,160,965	B2	10/2015	Redmann et al.
9,195,258	B2	11/2015	Millington
9,407,385	B2	8/2016	Spurgat et al.
9,456,243	B1	9/2016	Hughes et al.
9,507,780	B2	11/2016	Rothkopf et al.
9,560,448	B2	1/2017	Hartung
9,628,851	B2	4/2017	Hu et al.
9,977,561	B2	5/2018	Bates et al.
9,998,321	B2	6/2018	Cheshire
10,063,896	B2	8/2018	Amidei et al.
10,185,541	B2	1/2019	Millington
10,303,432	B2	5/2019	Millington
2001/0001160	A1	5/2001	Shoff et al.
2001/0009604	A1	7/2001	Ando et al.
2001/0022823	A1	9/2001	Renaud
2001/0027498	A1	10/2001	Van De Meulenhof et al.
2001/0032188	A1	10/2001	Miyabe et al.
2001/0042107	A1	11/2001	Palm
2001/0043456	A1	11/2001	Atkinson
2001/0046235	A1	11/2001	Trevitt et al.
2001/0047377	A1	11/2001	Sincaglia et al.
2001/0050991	A1	12/2001	Eves
2001/0055950	A1	12/2001	Davies et al.
2002/0002039	A1	1/2002	Qureshey et al.
2002/0002562	A1	1/2002	Moran et al.
2002/0002565	A1	1/2002	Ohyama
2002/0003548	A1	1/2002	Krusche et al.
2002/0015003	A1	2/2002	Kato et al.
2002/0022453	A1	2/2002	Balog et al.
2002/0026442	A1	2/2002	Lipscomb et al.
2002/0034374	A1	3/2002	Barton
2002/0035621	A1	3/2002	Zintel et al.
2002/0042844	A1	4/2002	Chiazzese
2002/0049843	A1	4/2002	Barone et al.
2002/0062406	A1	5/2002	Chang et al.
2002/0065926	A1	5/2002	Hackney et al.
2002/0067909	A1	6/2002	Iivonen
2002/0072816	A1	6/2002	Shdema et al.
2002/0072817	A1	6/2002	Champion
2002/0073228	A1	6/2002	Cognet et al.
2002/0078293	A1	6/2002	Kou et al.
2002/0080783	A1	6/2002	Fujimori
2002/0083172	A1	6/2002	Knowles et al.
2002/0083342	A1	6/2002	Webb et al.
2002/0090914	A1	7/2002	Kang et al.
2002/0093478	A1	7/2002	Yeh
2002/0095460	A1	7/2002	Benson
2002/0098878	A1	7/2002	Mooney et al.
2002/0101357	A1	8/2002	Gharapetian
2002/0103635	A1	8/2002	Mesarovic et al.
2002/0109710	A1	8/2002	Holtz et al.
2002/0112084	A1	8/2002	Deen et al.

(56) **References Cited**

U.S. PATENT DOCUMENTS

2002/0112244 A1 8/2002 Liou et al.
2002/0114354 A1 8/2002 Sinha et al.
2002/0114359 A1 8/2002 Ibaraki et al.
2002/0124097 A1 9/2002 Isely et al.
2002/0124182 A1 9/2002 Bacso et al.
2002/0129128 A1 9/2002 Gold et al.
2002/0129156 A1 9/2002 Yoshikawa
2002/0131398 A1 9/2002 Taylor
2002/0131761 A1 9/2002 Kawasaki et al.
2002/0136335 A1 9/2002 Liou et al.
2002/0137505 A1 9/2002 Eiche et al.
2002/0143998 A1 10/2002 Rajagopal et al.
2002/0146981 A1 10/2002 Saint-Hilaire et al.
2002/0150053 A1 10/2002 Gray et al.
2002/0159596 A1 10/2002 Durand et al.
2002/0163361 A1 11/2002 Parkin
2002/0165721 A1 11/2002 Chang et al.
2002/0165921 A1 11/2002 Sapieyevski
2002/0168938 A1 11/2002 Chang
2002/0173273 A1 11/2002 Spurgat et al.
2002/0174243 A1 11/2002 Spurgat et al.
2002/0174269 A1 11/2002 Spurgat et al.
2002/0177411 A1 11/2002 Yajima et al.
2002/0181355 A1 12/2002 Shikunami et al.
2002/0184310 A1 12/2002 Traversat et al.
2002/0188762 A1 12/2002 Tomassetti et al.
2002/0194260 A1 12/2002 Headley et al.
2002/0194309 A1 12/2002 Carter et al.
2003/0002609 A1 1/2003 Faller et al.
2003/0002849 A1 1/2003 Lord
2003/0008616 A1* 1/2003 Anderson H04B 1/1646 455/45
2003/0014486 A1 1/2003 May
2003/0018797 A1 1/2003 Dunning et al.
2003/0020763 A1 1/2003 Mayer et al.
2003/0023411 A1 1/2003 Witmer et al.
2003/0023741 A1 1/2003 Tomassetti et al.
2003/0035072 A1 2/2003 Hagg
2003/0035444 A1 2/2003 Zwack
2003/0037125 A1 2/2003 Luman et al.
2003/0041173 A1 2/2003 Hoyle
2003/0041174 A1 2/2003 Wen et al.
2003/0043856 A1 3/2003 Lakaniemi et al.
2003/0043924 A1 3/2003 Haddad et al.
2003/0046703 A1 3/2003 Knowles et al.
2003/0050058 A1 3/2003 Walsh et al.
2003/0055892 A1 3/2003 Huitema et al.
2003/0056220 A1 3/2003 Thornton
2003/0061428 A1 3/2003 Garney et al.
2003/0063528 A1 4/2003 Ogikubo
2003/0063755 A1 4/2003 Nourse et al.
2003/0066094 A1 4/2003 Van Der Schaar et al.
2003/0067437 A1 4/2003 McClintock et al.
2003/0073432 A1 4/2003 Meade
2003/0097478 A1 5/2003 King
2003/0099212 A1 5/2003 Anjum et al.
2003/0099221 A1 5/2003 Rhee
2003/0100335 A1 5/2003 Gassho et al.
2003/0101253 A1 5/2003 Saito et al.
2003/0103088 A1 6/2003 Dresti et al.
2003/0103464 A1 6/2003 Wong et al.
2003/0109270 A1 6/2003 Shorty
2003/0110329 A1 6/2003 Higaki et al.
2003/0118158 A1 6/2003 Hattori
2003/0123853 A1 7/2003 Iwahara et al.
2003/0126211 A1 7/2003 Anttila et al.
2003/0135822 A1 7/2003 Evans
2003/0157951 A1 8/2003 Hasty
2003/0164084 A1 9/2003 Redmann et al.
2003/0167335 A1 9/2003 Alexander
2003/0172123 A1 9/2003 Polan et al.
2003/0179780 A1 9/2003 Walker et al.
2003/0182254 A1 9/2003 Plastina et al.
2003/0185400 A1 10/2003 Yoshizawa et al.
2003/0187657 A1 10/2003 Erhart et al.
2003/0195964 A1 10/2003 Mane
2003/0198254 A1 10/2003 Sullivan et al.
2003/0198255 A1 10/2003 Sullivan et al.
2003/0198257 A1 10/2003 Sullivan et al.
2003/0200001 A1 10/2003 Goddard
2003/0204273 A1 10/2003 Dinker et al.
2003/0204509 A1 10/2003 Dinker et al.
2003/0210347 A1 11/2003 Kondo
2003/0210796 A1 11/2003 McCarty et al.
2003/0212802 A1 11/2003 Rector et al.
2003/0219007 A1 11/2003 Barrack et al.
2003/0220705 A1 11/2003 Ibey
2003/0225834 A1 12/2003 Lee et al.
2003/0227478 A1 12/2003 Chatfield
2003/0229900 A1 12/2003 Reisman
2003/0231208 A1 12/2003 Hanon et al.
2003/0231871 A1 12/2003 Ushimaru
2003/0235304 A1 12/2003 Evans et al.
2004/0001106 A1 1/2004 Deutscher et al.
2004/0001484 A1 1/2004 Ozguner
2004/0001591 A1 1/2004 Mani et al.
2004/0002938 A1 1/2004 Deguchi
2004/0008852 A1 1/2004 Also et al.
2004/0010727 A1 1/2004 Fujinami
2004/0012620 A1 1/2004 Buhler et al.
2004/0014426 A1 1/2004 Moore
2004/0015252 A1 1/2004 Aiso et al.
2004/0019497 A1 1/2004 Volk et al.
2004/0019807 A1 1/2004 Freund et al.
2004/0019911 A1 1/2004 Gates et al.
2004/0023697 A1 2/2004 Komura
2004/0024478 A1 2/2004 Hans et al.
2004/0024925 A1 2/2004 Cypher et al.
2004/0027166 A1 2/2004 Mangum et al.
2004/0032348 A1 2/2004 Lai et al.
2004/0032421 A1 2/2004 Williamson et al.
2004/0032922 A1 2/2004 Knapp et al.
2004/0037433 A1 2/2004 Chen
2004/0041836 A1 3/2004 Zaner et al.
2004/0042629 A1 3/2004 Mellone et al.
2004/0044742 A1* 3/2004 Evron G06F 17/30017 709/217
2004/0048569 A1 3/2004 Kawamura
2004/0059842 A1 3/2004 Hanson et al.
2004/0059965 A1 3/2004 Marshall et al.
2004/0066736 A1 4/2004 Kroeger
2004/0075767 A1 4/2004 Neuman et al.
2004/0078383 A1 4/2004 Mercer et al.
2004/0080671 A1 4/2004 Siemens et al.
2004/0093096 A1 5/2004 Huang et al.
2004/0098754 A1 5/2004 Vella et al.
2004/0111473 A1 6/2004 Lysenko et al.
2004/0117462 A1 6/2004 Bodin et al.
2004/0117491 A1 6/2004 Karaoguz et al.
2004/0117840 A1 6/2004 Boudreau et al.
2004/0117858 A1 6/2004 Boudreau et al.
2004/0128701 A1 7/2004 Kaneko et al.
2004/0131192 A1 7/2004 Metcalf
2004/0133689 A1 7/2004 Vasisht
2004/0143368 A1 7/2004 May et al.
2004/0143675 A1 7/2004 Aust
2004/0143852 A1 7/2004 Meyers
2004/0148237 A1 7/2004 Bittmann et al.
2004/0168081 A1 8/2004 Ladas et al.
2004/0170383 A1 9/2004 Mazur
2004/0171346 A1 9/2004 Lin
2004/0176025 A1 9/2004 Holm et al.
2004/0177167 A1 9/2004 Iwamura et al.
2004/0179554 A1 9/2004 Tsao
2004/0183827 A1 9/2004 Putterman et al.
2004/0185773 A1 9/2004 Gerber et al.
2004/0189363 A1 9/2004 Takano
2004/0195313 A1 10/2004 Lee
2004/0203376 A1 10/2004 Phillipps
2004/0203378 A1 10/2004 Powers
2004/0203590 A1 10/2004 Shteyn
2004/0203936 A1 10/2004 Ogino et al.
2004/0208158 A1 10/2004 Fellman et al.
2004/0213230 A1 10/2004 Douskalis et al.

(56) **References Cited**

U.S. PATENT DOCUMENTS

2004/0214524 A1 10/2004 Noda et al.
2004/0223622 A1 11/2004 Lindemann et al.
2004/0224638 A1 11/2004 Fadell et al.
2004/0228367 A1 11/2004 Mosig et al.
2004/0248601 A1 12/2004 Chang
2004/0249490 A1 12/2004 Sakai
2004/0249965 A1 12/2004 Huggins et al.
2004/0249982 A1 12/2004 Arnold et al.
2004/0252400 A1 12/2004 Blank et al.
2004/0253969 A1 12/2004 Nguyen et al.
2005/0010691 A1 1/2005 Oyadomari et al.
2005/0011388 A1 1/2005 Kouznetsov
2005/0013394 A1 1/2005 Rausch et al.
2005/0015551 A1 1/2005 Eames et al.
2005/0021590 A1 1/2005 Debique et al.
2005/0021811 A1 1/2005 Roelens
2005/0027821 A1 2/2005 Alexander et al.
2005/0047605 A1 3/2005 Lee et al.
2005/0058149 A1 3/2005 Howe
2005/0060435 A1 3/2005 Xue et al.
2005/0062637 A1 3/2005 El Zabadani et al.
2005/0081213 A1 4/2005 Suzuoki et al.
2005/0100166 A1 5/2005 Smetters et al.
2005/0102699 A1 5/2005 Kim et al.
2005/0105052 A1* 5/2005 McCormick G03B 31/02 352/40
2005/0114538 A1 5/2005 Rose
2005/0120128 A1 6/2005 Willes et al.
2005/0125222 A1 6/2005 Brown et al.
2005/0125357 A1 6/2005 Saadat et al.
2005/0129240 A1 6/2005 Balfanz et al.
2005/0131558 A1 6/2005 Braithwaite et al.
2005/0149204 A1 7/2005 Manchester et al.
2005/0154766 A1 7/2005 Huang et al.
2005/0159833 A1* 7/2005 Giaimo A63F 13/12 700/94
2005/0160270 A1 7/2005 Goldberg et al.
2005/0166135 A1 7/2005 Burke et al.
2005/0168630 A1 8/2005 Yamada et al.
2005/0170781 A1 8/2005 Jacobsen et al.
2005/0177643 A1 8/2005 Xu
2005/0181348 A1 8/2005 Carey et al.
2005/0195205 A1 9/2005 Abrams, Jr.
2005/0195823 A1 9/2005 Chen et al.
2005/0197725 A1 9/2005 Alexander et al.
2005/0198574 A1 9/2005 Lamkin et al.
2005/0201549 A1 9/2005 Dedieu et al.
2005/0215265 A1 9/2005 Sharma
2005/0216556 A1 9/2005 Manion et al.
2005/0239445 A1 10/2005 Karaoguz et al.
2005/0246421 A1 11/2005 Moore et al.
2005/0262217 A1* 11/2005 Nonaka H04N 7/17318 709/217
2005/0281255 A1 12/2005 Davies et al.
2005/0283820 A1 12/2005 Richards et al.
2005/0288805 A1 12/2005 Moore et al.
2005/0289224 A1 12/2005 Deslippe et al.
2006/0002681 A1 1/2006 Spilo et al.
2006/0041639 A1 2/2006 Lamkin et al.
2006/0049966 A1 3/2006 Ozawa et al.
2006/0072489 A1 4/2006 Toyoshima
2006/0095516 A1 5/2006 Wijeratne
2006/0098936 A1 5/2006 Ikeda et al.
2006/0119497 A1 6/2006 Miller et al.
2006/0142034 A1 6/2006 Wentink et al.
2006/0143236 A1 6/2006 Wu
2006/0149850 A1 7/2006 Bowman
2006/0155721 A1 7/2006 Grunwald et al.
2006/0156374 A1 7/2006 Hu et al.
2006/0161742 A1 7/2006 Sugimoto et al.
2006/0173844 A1 8/2006 Zhang et al.
2006/0173976 A1 8/2006 Vincent et al.
2006/0193454 A1 8/2006 Abou-Chakra et al.
2006/0215741 A1 9/2006 Chin et al.
2006/0222186 A1 10/2006 Paige et al.
2006/0227985 A1 10/2006 Kawanami
2006/0259649 A1 11/2006 Hsieh et al.
2006/0265571 A1 11/2006 Bosch et al.
2006/0270395 A1 11/2006 Dhawan et al.
2006/0281409 A1 12/2006 Levien et al.
2006/0287746 A1 12/2006 Braithwaite et al.
2007/0003067 A1 1/2007 Gierl et al.
2007/0022207 A1 1/2007 Millington et al.
2007/0038999 A1 2/2007 Millington et al.
2007/0043847 A1 2/2007 Carter et al.
2007/0047712 A1 3/2007 Gross et al.
2007/0048713 A1 3/2007 Plastina et al.
2007/0054680 A1 3/2007 Mo et al.
2007/0087686 A1 4/2007 Holm et al.
2007/0142022 A1 6/2007 Madonna et al.
2007/0142944 A1 6/2007 Goldberg et al.
2007/0143493 A1 6/2007 Mullig et al.
2007/0169115 A1 7/2007 Ko et al.
2007/0180137 A1 8/2007 Rajapakse
2007/0192156 A1 8/2007 Gauger
2007/0220150 A1 9/2007 Garg
2007/0249295 A1 10/2007 Ukita et al.
2007/0265031 A1 11/2007 Koizumi et al.
2007/0271388 A1 11/2007 Bowra et al.
2007/0299778 A1 12/2007 Haveson et al.
2008/0002836 A1 1/2008 Moeller et al.
2008/0007649 A1 1/2008 Bennett
2008/0007650 A1 1/2008 Bennett
2008/0007651 A1 1/2008 Bennett
2008/0018785 A1 1/2008 Bennett
2008/0022320 A1 1/2008 Ver Steeg
2008/0025535 A1 1/2008 Rajapakse
2008/0060084 A1 3/2008 Gappa et al.
2008/0072816 A1 3/2008 Riess et al.
2008/0075295 A1 3/2008 Mayman et al.
2008/0077619 A1 3/2008 Gilley et al.
2008/0077620 A1 3/2008 Gilley et al.
2008/0086318 A1 4/2008 Gilley et al.
2008/0091771 A1 4/2008 Allen et al.
2008/0109852 A1 5/2008 Kretz et al.
2008/0120429 A1 5/2008 Millington et al.
2008/0126943 A1 5/2008 Parasnis et al.
2008/0144861 A1 6/2008 Melanson et al.
2008/0144864 A1 6/2008 Huon
2008/0146289 A1 6/2008 Korneluk et al.
2008/0189272 A1 8/2008 Powers et al.
2008/0205070 A1 8/2008 Osada
2008/0212729 A1 9/2008 Shaanan
2008/0212786 A1 9/2008 Park
2008/0215169 A1 9/2008 Debettencourt et al.
2008/0263010 A1 10/2008 Roychoudhuri et al.
2008/0273714 A1 11/2008 Hartung
2008/0303947 A1 12/2008 Ohnishi et al.
2009/0011798 A1 1/2009 Yamada
2009/0017868 A1 1/2009 Ueda et al.
2009/0031336 A1 1/2009 Chavez et al.
2009/0060219 A1 3/2009 Inohara
2009/0062947 A1 3/2009 Lydon et al.
2009/0070434 A1 3/2009 Himmelstein
2009/0077610 A1 3/2009 White et al.
2009/0087000 A1 4/2009 Ko
2009/0089327 A1 4/2009 Kalaboukis et al.
2009/0100189 A1 4/2009 Bahren et al.
2009/0124289 A1 5/2009 Nishida
2009/0157905 A1 6/2009 Davis
2009/0164655 A1 6/2009 Pettersson et al.
2009/0169030 A1 7/2009 Inohara
2009/0193345 A1 7/2009 Wensley et al.
2009/0222115 A1 9/2009 Malcolm et al.
2009/0222392 A1 9/2009 Martin et al.
2009/0228919 A1 9/2009 Zott et al.
2009/0251604 A1 10/2009 Iyer
2010/0004983 A1 1/2010 Dickerson et al.
2010/0031366 A1 2/2010 Knight et al.
2010/0049835 A1 2/2010 Ko et al.
2010/0087089 A1 4/2010 Struthers et al.
2010/0228740 A1 9/2010 Cannistraro et al.
2010/0284389 A1 11/2010 Ramsay et al.
2010/0299639 A1 11/2010 Ramsay et al.

(56) **References Cited**

U.S. PATENT DOCUMENTS

2011/0001632	A1	1/2011	Hohorst
2011/0002487	A1	1/2011	Panther et al.
2011/0066943	A1	3/2011	Brillon et al.
2011/0222701	A1	9/2011	Donaldson et al.
2011/0228944	A1	9/2011	Croghan et al.
2011/0316768	A1	12/2011	McRae
2012/0029671	A1	2/2012	Millington et al.
2012/0030366	A1	2/2012	Collart et al.
2012/0051567	A1	3/2012	Castor-Perry
2012/0060046	A1	3/2012	Millington
2012/0129446	A1	5/2012	Ko et al.
2012/0148075	A1	6/2012	Goh et al.
2012/0185771	A1	7/2012	Rothkopf et al.
2012/0192071	A1	7/2012	Millington
2012/0207290	A1	8/2012	Moyers et al.
2012/0237054	A1	9/2012	Eo et al.
2012/0281058	A1	11/2012	Laney et al.
2012/0290621	A1	11/2012	Heitz, III et al.
2013/0013757	A1	1/2013	Millington et al.
2013/0018960	A1	1/2013	Knysz et al.
2013/0022221	A1	1/2013	Kallai et al.
2013/0031475	A1	1/2013	Maor et al.
2013/0038726	A1	2/2013	Kim
2013/0041954	A1	2/2013	Kim et al.
2013/0047084	A1	2/2013	Sanders et al.
2013/0052940	A1	2/2013	Brillhart et al.
2013/0070093	A1	3/2013	Rivera et al.
2013/0080599	A1	3/2013	Ko et al.
2013/0094670	A1	4/2013	Millington
2013/0124664	A1	5/2013	Fonseca, Jr. et al.
2013/0129122	A1	5/2013	Johnson et al.
2013/0132837	A1	5/2013	Mead et al.
2013/0159126	A1	6/2013	Elkady
2013/0167029	A1	6/2013	Friesen et al.
2013/0174100	A1	7/2013	Seymour et al.
2013/0174223	A1	7/2013	Dykeman et al.
2013/0179163	A1	7/2013	Herbig et al.
2013/0191454	A1	7/2013	Oliver et al.
2013/0197682	A1	8/2013	Millington
2013/0208911	A1	8/2013	Millington
2013/0208921	A1	8/2013	Millington
2013/0226323	A1	8/2013	Millington
2013/0230175	A1	9/2013	Bech et al.
2013/0232416	A1	9/2013	Millington
2013/0253934	A1	9/2013	Parekh et al.
2013/0279706	A1	10/2013	Marti
2013/0287186	A1	10/2013	Quady
2013/0290504	A1	10/2013	Quady
2014/0006483	A1	1/2014	Garmark et al.
2014/0037097	A1	2/2014	Labosco
2014/0064501	A1	3/2014	Olsen et al.
2014/0075308	A1	3/2014	Sanders et al.
2014/0075311	A1	3/2014	Boettcher et al.
2014/0079242	A1	3/2014	Nguyen et al.
2014/0108929	A1	4/2014	Garmark et al.
2014/0123005	A1	5/2014	Forstall et al.
2014/0140530	A1	5/2014	Gomes-Casseres et al.
2014/0161265	A1	6/2014	Chaikin et al.
2014/0181569	A1	6/2014	Millington et al.
2014/0233755	A1	8/2014	Kim et al.
2014/0242913	A1	8/2014	Pang
2014/0256260	A1	9/2014	Ueda et al.
2014/0267148	A1	9/2014	Luna et al.
2014/0270202	A1	9/2014	Ivanov et al.
2014/0273859	A1	9/2014	Luna et al.
2014/0279889	A1	9/2014	Luna
2014/0285313	A1	9/2014	Luna et al.
2014/0286496	A1	9/2014	Luna et al.
2014/0298174	A1	10/2014	Ikonomov
2014/0323036	A1	10/2014	Daley et al.
2014/0344689	A1	11/2014	Scott et al.
2014/0378056	A1	12/2014	Liu
2015/0019670	A1	1/2015	Redmann
2015/0026613	A1	1/2015	Kwon et al.
2015/0032844	A1	1/2015	Tarr et al.
2015/0043736	A1	2/2015	Olsen et al.
2015/0049248	A1	2/2015	Wang et al.
2015/0074527	A1	3/2015	Sevigny et al.
2015/0074528	A1	3/2015	Sakalowsky et al.
2015/0098576	A1	4/2015	Sundaresan et al.
2015/0139210	A1	5/2015	Marin et al.
2015/0256954	A1	9/2015	Carlsson et al.
2015/0304288	A1	10/2015	Balasaygun et al.
2015/0365987	A1	12/2015	Weel
2019/0324713	A1	10/2019	Millington
2019/0339934	A1	11/2019	Millington
2019/0369954	A1	12/2019	Millington

FOREIGN PATENT DOCUMENTS

CA	2485100	A1	11/2003
CN	1598767	A	9/2004
CN	1598767	A	3/2005
CN	101292500	A	10/2008
EP	0251584	A2	1/1988
EP	0672985	A1	9/1995
EP	0742674	B1	5/1996
EP	0772374	A2	5/1997
EP	1058985	A2	12/2000
EP	1111527	A2	6/2001
EP	1122931	A2	8/2001
EP	1312188	A1	8/2001
EP	1410686		2/2002
EP	1295420	A1	3/2003
EP	1312188	A1	5/2003
EP	1416687	B1	10/2003
EP	1389853	A1	2/2004
EP	2713281		4/2004
EP	1517464	A2	8/2004
EP	1517464	A2	3/2005
EP	0895427	A3	1/2006
EP	1416687	B1	8/2006
EP	1410686		3/2008
EP	2043381	A2	4/2009
EP	2161950	A2	3/2010
EP	0742674	B1	4/2014
EP	2591617	B1	6/2014
GB	2284327	A	5/1995
GB	2338374		12/1999
GB	2379533	A	6/2002
GB	2379533	A	3/2003
GB	2486183		6/2012
JP	63269633		4/1987
JP	63269633		11/1988
JP	07-210129		8/1995
JP	2000149391	A	11/1998
JP	2000149391	A	5/2000
JP	2001034951		2/2001
JP	2001251360	A	9/2001
JP	2002111817		4/2002
JP	2002123267	A	4/2002
JP	2002141915	A	5/2002
JP	2002358241	A	12/2002
JP	2003037585		2/2003
JP	2003037585	A	2/2003
JP	2003506765	A	2/2003
JP	2003101958		4/2003
JP	2003101958	A	4/2003
JP	2003169089	A	6/2003
JP	2005108427		4/2005
JP	2005136457		5/2005
JP	2007241652	A	9/2007
JP	2009506603	A	2/2009
JP	2009075540	A	4/2009
JP	2009135750		6/2009
JP	2009535708		10/2009
JP	2009538006	A	10/2009
JP	2011130496		6/2011
KR	20030011128	A	2/2003
TW	439027		7/1998
TW	439027		6/2001
WO	9525313	A1	9/1995
WO	9709756	A2	3/1997
WO	WO1999023560		11/1998

(56) **References Cited**

FOREIGN PATENT DOCUMENTS

WO	1999023560		5/1999
WO	WO0019693	A1	9/1999
WO	9961985	A1	12/1999
WO	0019693	A1	4/2000
WO	0110125	A1	2/2001
WO	0153994		7/2001
WO	02073851		9/2002
WO	02073851	A1	9/2002
WO	02091596	A2	11/2002
WO	03058965	A1	7/2003
WO	03093950	A2	11/2003
WO	03096741	A2	11/2003
WO	2003093950	A2	11/2003
WO	2005013047	A2	2/2005
WO	2007023120	A1	3/2007
WO	WO2007135581	A2	5/2007
WO	2007127485		11/2007
WO	2007131555		11/2007
WO	2007135581	A2	11/2007
WO	WO2008082350	A1	12/2007
WO	2008046530	A2	4/2008
WO	2008082350	A1	7/2008
WO	2008114389	A1	9/2008
WO	2012050927		4/2012
WO	2014004182		1/2014
WO	2014149533	A2	9/2014

OTHER PUBLICATIONS

"Final Office Action dated Mar. 26, 2015, issued in connection with U.S. Appl. No. 14/184,528, filed Feb. 19, 2014, 18 pages".
"Final Office Action dated Mar. 4, 2015, issued in connection with U.S. Appl. No. 13/848,904, filed Mar. 22, 2013, 16 pages."
"Final Office Action dated Mar. 5, 2015, issued in connection with U.S. Appl. No. 13/888,203, filed May 6, 2013, 13 pages."
"Final Office Action dated Mar. 9, 2015, issued in connection with U.S. Appl. No. 14/516,867, filed Oct. 17, 2014, 14 pages."
"Non-Final Office Action dated Mar. 12, 2015, issued in connection with U.S. Appl. No. 13/705,174, filed Dec. 5, 2012, 13 pages."
"Non-Final Office Action dated Mar. 13, 2015, issued in connection with U.S. Appl. No. 13/705,177, filed Dec. 5, 2012, 15 pages."
"Non-Final Office Action dated Mar. 27, 2015, issued in connection with U.S. Appl. No. 13/705,178, filed Dec. 5, 2012, 14 pages."
"Non-Final Office Action dated Mar. 4, 2015, issued in connection with U.S. Appl. No. 13/435,776, filed Mar. 30, 2012, 16 pages."
"Pre-Interview First Office Action dated Mar. 10, 2015, issued in connection with U.S. Appl. No. 14/505,027, filed Oct. 2, 2014, 4 pages."
"Advisory Action dated Apr. 15, 2015, issued in connection with U.S. Appl. No. 14/184,526, filed Feb. 19, 2014, 9 pages."
"Advisory Action dated Apr. 15, 2015, issued in connection with U.S. Appl. No. 14/184,935, filed Feb. 20, 2014, 9 pages."
Akyildiz I.F., et al., "Multimedia Group Synchronization Protocols for Integrated Services Networks," IEEE Journal on Selected Areas in Communications, 1996, vol. 14 (1), pp. 162-173.
Benslimane A., "A Multimedia Synchronization Protocol for Multicast Groups," Proceedings of the 26th Euromicro Conference, 2000, vol. 1, pp. 456-463.
Biersack E., et al., "Intra- and Inter-Stream Synchronisation for Stored Multimedia Streams," IEEE International Conference on Multimedia Computing and Systems, 1996, pp. 372-381.
Bretl W.E., et al., MPEG2 Tutorial [online], 2000 [retrieved on Jan. 13, 2009] Retrieved from the Internet:< http://www.bretl.com/mpeghtml/MPEGindex.htm>, pp. 1-23.
Final Office Action dated Jul. 13, 2009 for U.S. Appl. No. 10/816,217, filed Apr. 1, 2004.
Final Office Action dated Oct. 21, 2011 for U.S. Appl. No. 10/816,217, filed Apr. 1, 2004.
Final Office Action dated Jan. 28, 2011 for U.S. Appl. No. 10/816,217, filed Apr. 1, 2004.
Final Office Action dated Jun. 30, 2008 for U.S. Appl. No. 10/816,217, filed Apr. 1, 2004.
Huang C.M., et al., "A Synchronization Infrastructure for Multicast Multimedia at the Presentation Layer," IEEE Transactions on Consumer Electronics, 1997, vol. 43 (3), pp. 370-380.
International Search Report for Application No. PCT/US04/23102, dated Aug. 1, 2008, 5 pages.
Ishibashi Y., "A Group Synchronization Mechanism for Live Media in Multicast Communications," IEEE Global Telecommunications Conference, 1997, vol. 2, pp. 746-752.
Ishibashi Y., "A Group Synchronization Mechanism for Stored Media in Multicast Communications," IEEE Information Revolution and Communications, 1997, vol. 2, pp. 692-700.
Jo J., et al., "Synchronized One-to-many Media Streaming with Adaptive Playout Control," Proceedings of SPIE, 2002, vol. 4861, pp. 71-82.
Mills D.L., "Network Time Protocol (Version 3) Specification, Implementation and Analysis," Network Working Group, Mar. 1992, <http://www.ietf.org/rfc/rfc1305.txt>.
Mills D.L., "Precision Synchronization of Computer Network Clocks," ACM SIGCOMM Computer Communication Review, 1994, vol. 24 (2), pp. 28-43.
Motorola., "Simplefi, Wireless Digital Audio Receiver, Installation and User Guide", Dec. 31, 2001.
Non-Final Office Action dated Jan. 18, 2008 for U.S. Appl. No. 10/816,217, filed Apr. 1, 2004.
Non-Final Office Action dated Jun. 21, 2011 for U.S. Appl. No. 10/816,217, filed Apr. 1, 2004.
Non-Final Office Action dated Jan. 22, 2009 for U.S. Appl. No. 10/816,217, filed Apr. 1, 2004.
Non-Final Office Action dated Jun. 25, 2010 for U.S. Appl. No. 10/816,217, filed Apr. 1, 2004.
Non-Final Office Action dated Feb. 29, 2012 for U.S. Appl. No. 13/297,000, filed Nov. 15, 2011.
Notice of Allowance dated Dec. 27, 2011 for U.S. Appl. No. 10/816,217, filed Apr. 1, 2004.
Park S., et al., "Group Synchronization in MultiCast Media Communications," Proceedings of the 5th Research on Multicast Technology Workshop, 2003.
PRISMIQ; Inc., "PRISMIQ Media Player User Guide", 2003, 44 pages.
Rothermel K., et al., "An Adaptive Stream Synchronization Protocol," 5th International Workshop on Network and Operating System Support for Digital Audio and Video, 1995.
Schulzrinne H., et al., "RTP: A Transport Protocol for Real-Time Applications, RFC 3550," Network Working Group, 2003, pp. 1-89.
The MPEG-2 Transport Stream. Retrieved from the Internet:< URL: http://www.coolstf.com/mpeg/#ts>, retrieved on Aug. 24, 2006.
Final Office Action dated Sep. 13, 2012 for U.S. Appl. No. 13/297,000, filed Sep. 13, 2012, 17 pages.
"UPnP; "Universal Plug and Play Device Architecture"; Jun. 8, 2000; version 1.0; Microsoft Corporation; pp. 1-54".
Voyetra; Turtle Beach Inc., "AudioTron Quick Start Guide, Version 1.0", Mar. 2001, 24 pages.
Voyetra; Turtle Beach Inc., "AudioTron Reference Manual, Version 3.0", May 2002, 70 pages.
Voyetra; Turtle Beach Inc., "AudioTron Setup Guide, Version 3.0", May 2002, 38 pages.
"Advisory Action dated Jul. 28, 2015, issued in connection with U.S. Appl. No. 14/184,522, filed Feb. 19, 2014, 7 pages".
"Baudisch et al., "Flat Volume Control: Improving Usability by Hiding the Volume Control Hierarchy in the User Interface", 2004, 8 pages."
"Chakrabarti et al., "A Remotely Controlled Bluetooth Enabled Environment", IEEE, 2004, pp. 77-81."
"Schmandt et al., "Impromptu: Managing Networked Audio Applications for Mobile Users", 2004, 11 pages."
"Final Office Action dated Aug. 10, 2015, issued in connection with U.S. Appl. No. 14/290,493, filed May 29, 2014, 26 pages."
"Final Office Action dated Aug. 11, 2015, issued in connection with U.S. Appl. No. 13/864,247, filed Apr. 17, 2013, 15 pages".
"Final Office Action dated Jul. 15, 2015, issued in connection with U.S. Appl. No. 14/504,812, filed Oct. 2, 2014, 18 pages".

(56) **References Cited**

OTHER PUBLICATIONS

"Final Office Action dated Aug. 3, 2015, issued in connection with U.S. Appl. No. 13/848,921, filed Mar. 22, 2013, 13 pages".
"Fulton et al., "The Network Audio System: Make Your Application Sing (as Well as Dance)!", The X Resource, 1994, 14 pages."
"Hans et al., "Interacting with Audio Streams for Entertainment and Communication", 2003, 7 pages."
"Levergood et al., "AudioFile: A Network-Transparent System for Distributed Audio Applications", Digital Equipment Corporation, 1993, 109 pages."
"Notice of Allowance dated Aug. 10, 2015, issued in connection with U.S. Appl. No. 13/848,904, filed Mar. 22, 2013, 9 pages."
"Notice of Allowance dated Aug. 12, 2015, issued in connection with U.S. Appl. No. 13/435,739, filed Mar. 30, 2012, 27 pages".
"Notice of Allowance dated Jul. 13, 2015, issued in connection with U.S. Appl. No. 14/184,526, filed Feb. 19, 2014, 22 pages".
"Notice of Allowance dated Jul. 15, 2015, issued in connection with U.S. Appl. No. 13/705,174, filed Dec. 5, 2012, 18 pages".
"Notice of Allowance dated Jul. 17, 2015, issued in connection with U.S. Appl. No. 13/864,251, filed Apr. 17, 2013, 20 pages".
"Notice of Allowance dated Jul. 29, 2015, issued in connection with U.S. Appl. No. 13/359,976, filed Jan. 27, 2012, 28 pages".
"Notice of Allowance dated Jul. 29, 2015, issued in connection with U.S. Appl. No. 14/186,850, filed Feb. 21, 2014, 9 pages".
"Notice of Allowance dated Jul. 30, 2015, issued in connection with U.S. Appl. No. 13/705,178, filed Dec. 5, 2012, 18 pages".
"Notice of Allowance dated Aug. 4, 2015, issued in connection with U.S. Appl. No. 14/516,867, filed Oct. 17, 2014, 13 pages".
"Notice of Allowance dated Aug. 5, 2015, issued in connection with U.S. Appl. No. 13/435,776, filed Mar. 30, 2012, 26 pages".
"Nutzel et al., "Sharing Systems for Future HiFi Systems", IEEE, 2004, 9 pages."
"Re-Exam Final Office Action dated Aug. 5, 2015, issued in connection with U.S. Appl. No. 90/013,423, filed Jan. 5, 2015, 25 pages."
"Corrected Notice of Allowance dated Aug. 19, 2015, issued in connection with U.S. Appl. No. 13/907,666, filed May 31, 2013, 2 pages."
"Notice of Allowance dated Sep. 21, 2015, issued in connection with U.S. Appl. No. 13/297,000, filed Nov. 15, 2011, 11 pages."
"Notice of Allowance dated Sep. 22, 2015, issued in connection with U.S. Appl. No. 13/888,203, filed May 6, 2013, 7 pages".
"Notice of Allowance dated Sep. 24, 2015, issued in connection with U.S. Appl. No. 13/705,174, filed Dec. 5, 2012, 7 pages."
"Notice of Allowance dated Sep. 24, 2015, issued in connection with U.S. Appl. No. 14/184,935, filed Feb. 20, 2014, 7 pages".
"Notice of Allowance dated Aug. 27, 2015, issued in connection with U.S. Appl. No. 13/705,177, filed Dec. 5, 2012, 34 pages."
"Notice of Allowance dated Aug. 27, 2015, issued in connection with U.S. Appl. No. 14/505,027, filed Oct. 2, 2014, 18 pages."
"Notice of Allowance dated Sep. 3, 2015, issued in connection with U.S. Appl. No. 13/705,174, filed Dec. 5, 2012, 4 pages."
"Notice of Rejection dated Sep. 15, 2015 in connection with Japanese Patent Application No. 2014-220704, 7 pages".
"Final Office Action dated Mar. 27, 2014 for U.S. Appl. No. 13/533,105, filed Jun. 26, 2012".
"Non-Final Office Action dated May 1, 2014 for U.S. Appl. No. 14/184,522, filed Feb. 19, 2014".
"Non-Final Office Action dated May 6, 2014 for U.S. Appl. No. 13/705,176, filed Dec. 5, 2012".
"Non-Final Office Action dated May 12, 2014 for U.S. Appl. No. 14/184,528, filed Feb. 19, 2014".
"Non-Final Office Action dated May 14, 2014 for U.S. Appl. No. 13/848,932, filed Mar. 22, 2013".
"European Extended Search Report for Application No. 14181454.1 dated Mar. 31, 2015, 9 pages."
"Final Office Action dated Apr. 28, 2015, issued in connection with U.S. Appl. No. 14/186,850, filed Feb. 21, 2014, 20 pages".
"Notice of Allowance dated May 19, 2015, issued in connection with U.S. Appl. No. 13/907,666, filed May 31, 2013, 7 pages".
"Re-Exam Non-Final Office Action dated Apr. 22, 2015, issued in connection with U.S. Appl. No. 90/013,423, filed Jan. 5, 2015, 16 pages."
Advisory Action dated Feb. 2, 2016, issued in connection with U.S. Appl. No. 13/848,921, filed Mar. 22, 2013, 8 pages.
Advisory Action dated Feb. 1, 2016, issued in connection with U.S. Appl. No. 13/864,247, filed Apr. 17, 2013, 6 pages.
Final Office Action dated Nov. 18, 2015, issued in connection with U.S. Appl. No. 13/533,105, filed Jun. 26, 2012, 56 pages.
Final Office Action dated Nov. 30, 2015, issued in connection with U.S. Appl. No. 13/871,795, filed Apr. 26, 2013, 26 pages.
Non-Final Office Action dated Jan. 13, 2016, issued in connection with U.S. Appl. No. 14/184,528, filed Feb. 19, 2014, 14 pages.
Non-Final Office Action dated Dec. 28, 2015, issued in connection with U.S. Appl. No. 14/290,493, filed May 29, 2014, 29 pages.
Notice of Allowance dated Jan. 11, 2016, issued in connection with U.S. Appl. No. 14/565,544, filed Dec. 9, 2014, 5 pages.
Blakowski G. et al., "A Media Synchronization Survey: Reference Model, Specification, and Case Studies", Jan. 1996, vol. 14, No. 1, 5-35.
"European Extended Search Report for Application No. 13184747.7 dated Feb. 28, 2014, 8 pages".
"Final Office Action dated Jul. 3, 2012 for U.S. Appl. No. 13/298,090, filed Nov. 16, 2011".
"Final Rejection dated Jan. 21, 2010 for U.S. Appl. No. 11/906,702, filed Oct. 2, 2007".
"Maniactools, "Identify Duplicate Files by Sound," Sep. 28, 2010, http://www.maniactools.com/soft/music-duplicate-remover/identify-duplicate-files-by-sound.shtml".
"Non-Final Office Action dated Dec. 5, 2013 for U.S. Appl. No. 13/827,653, filed Mar. 14, 2013".
"Non-Final Office Action dated Mar. 19, 2013 for U.S. Appl. No. 13/724,048, filed Dec. 21, 2012".
"Non-Final Office Action dated Apr. 30, 2012 for U.S. Appl. No. 13/204,511, filed Aug. 5, 2011".
"Non-Final Office Action dated Jul. 30, 2013 for U.S. Appl. No. 13/724,048, filed Dec. 21, 2012".
"Non-Final Rejection dated Aug. 20, 2009 for U.S. Appl. No. 11/906,702, filed Oct. 2, 2007".
"Notice of Allowance dated Mar. 6, 2014 for U.S. Appl. No. 13/827,653, filed Mar. 14, 2013".
"Notice of Allowance dated Nov. 10, 2011 for U.S. Appl. No. 11/906,702, filed Oct. 2, 2007".
"Notice of Allowance dated Nov. 13, 2013 for U.S. Appl. No. 13/724,048, filed Dec. 21, 2012".
"Notice of Allowance dated Jan. 21, 2013 for U.S. Appl. No. 13/298,090, filed Nov. 16, 2011".
"Notice of Allowance dated Oct. 5, 2012 for U.S. Appl. No. 13/204,511, filed Aug. 5, 2011".
"Advisory Action dated Nov. 12, 2014, issued in connection with U.S. Appl. No. 13/907,666, filed May 31, 2013, 6 pages".
"Advisory Action dated Nov. 26, 2014, issued in connection with U.S. Appl. No. 14/186,850, filed Feb. 21, 2014, 9 pages".
"Advisory Action dated Jan. 8, 2015, issued in connection with U.S. Appl. No. 13/705,176, filed Dec. 5, 2012, 4 pages".
"Crown PIP Manual available for sale at least 2004, 68 pages".
"Final Office Action dated Dec. 17, 2014, issued in connection with U.S. Appl. No. 13/533,105, filed Jun. 26, 2012, 36 pages".
"Final Office Action dated Dec. 3, 2014, issued in connection with U.S. Appl. No. 14/184,528, filed Feb. 19, 2014, 12 pages".
"Final Office Action dated Jan. 7, 2015, issued in connection with U.S. Appl. No. 13/848,932, filed Mar. 22, 2013, 14 pages".
"Non-Final Office Action dated Dec. 1, 2014, issued in connection with U.S. Appl. No. 14/516,867, filed Oct. 17, 2014, 11 pages".
"Non-Final Office Action dated Nov. 17, 2014, issued in connection with U.S. Appl. No. 13/864,247, filed Apr. 17, 2013, 11 pages".
"Non-Final Office Action dated Nov. 18, 2014, issued in connection with U.S. Appl. No. 13/435,739, filed Mar. 30, 2012, 10 pages".
"Non-Final Office Action dated Nov. 19, 2014, issued in connection with U.S. Appl. No. 13/848,921, filed Mar. 22, 2013, 9 pages".
"Renkus Heinz Manual; available for sale at least 2004, 6 pages".
Advisory Action dated Feb. 10, 2016, issued in connection with U.S. Appl. No. 13/871,795, filed Apr. 26, 2013, 3 pages.

(56) **References Cited**

OTHER PUBLICATIONS

European Extended Search Report dated Mar. 7, 2016, issued in connection with EP Application No. 13810340.3, 9 pages.
Final Office Action dated Feb. 24, 2016, issued in connection with U.S. Appl. No. 13/871,795, filed Apr. 26, 2013, 28 pages.
Horwitz, Jeremy, "Logic3 i-Station25," retrieved from the internet: http://www.ilounge.com/index.php/reviews/entry/logic3-i-station25/, last visited Dec. 17, 2013, 5 pages.
International Bureau, International Preliminary Search Report dated Jan. 30, 2014, issued in connection with International Application No. PCT/US2012/045894, 6 pages.
International Searching Authority, International Search Report for Application No. PCT/US2012/045894, dated Dec. 26, 2012, 3 pages.
International Searching Authority, Written Opinion dated Dec. 26, 2012, issued in connection with International Application No. PCT/US2012/045894, filed on Jul. 9, 2012, 4 pages.
Japanese Intellectual Property Office, Office Action Summary dated Feb. 2, 2016, issued in connection with Japanese Patent Application No. 2015-520286, 6 pages.
Japanese Patent Office, Notice of Rejection, dated Feb. 3, 2015, issued in connection with Japanese Patent Application No. 2014-521648, 7 pages.
Roland Corporation, "Roland announces BA-55 Portable PA System," press release, Apr. 6, 2011, 2 pages.
Canadian Intellectual Property Office, Canadian Office Action dated Apr. 4, 2016, issued in connection with Canadian Patent Application No. 2,842,342, 5 pages.
European Patent Office, Examination Report dated Mar. 22, 2016, issued in connection with European Patent Application No. EP14181454.1, 6 pages.
Falcone, John, "Sonos BU150 Digital Music System review," CNET, CNET [online] Jul. 27, 2009 [retrieved on Mar. 16, 2016], 11 pages Retrieved from the Internet: URL:http://www.cnet.com/products/sonos-bu150-digital-music-system/.
Japanese Patent Office, Office Action dated Mar. 29, 2016, issued in connection with Japanese Patent Application No. JP2015-520288, 12 pages.
Non-Final Office Action dated Mar. 8, 2016, issued in connection with U.S. Appl. No. 13/848,921, filed Mar. 22, 2013, 13 pages.
Notice of Allowance dated Apr. 7, 2016, issued in connection with U.S. Appl. No. 13/533,105, filed Jun. 26, 2012, 40 pages.
Notice of Allowance dated Apr. 11, 2016, issued in connection with U.S. Appl. No. 13/864,247, filed Apr. 17, 2013, 21 pages.
"Final Office Action dated Jun. 5, 2014 for U.S. Appl. No. 13/907,666, filed May 31, 2013".
"Non-Final Office Action dated Jan. 5, 2012 for U.S. Appl. No. 13/298,090, filed Nov. 16, 2011, 40 pages".
"Non-Final Office Action dated Jun. 17, 2014 for U.S. Appl. No. 14/176,808, filed Feb. 10, 2014".
"Non-Final Office Action dated Dec. 18, 2013 for U.S. Appl. No. 13/907,666, filed May 31, 2013".
"Non-Final Office Action dated May 27, 2014 for U.S. Appl. No. 14/186,850, filed Feb. 21, 2014".
"Yamaha DME Designer software manual: Copyright 2004", p. 1-250.
"Yamaha DME Designer software manual: Copyright 2004", p. 251-482.
Advisory Action dated Jun. 9, 2016, issued in connection with U.S. Appl. No. 13/871,795, filed Apr. 25, 2013, 14 pages.
Final Office Action dated Jun. 3, 2016, issued in connection with U.S. Appl. No. 13/705,176, filed Dec. 5, 2012, 24 pages.
Final Office Action dated May 25, 2016, issued in connection with U.S. Appl. No. 14/290,493, filed May 29, 2014, 33 pages.
Japanese Patent Office, Office Action dated May 24, 2016, issued in connection with Japanese Patent Application No. 2014-220704, 7 pages.
Non-Final Office Action dated Jun. 1, 2016, issued in connection with U.S. Appl. No. 14/184,522, filed Feb. 19, 2014, 21 pages.
Non-Final Office Action dated May 10, 2016, issued in connection with U.S. Appl. No. 14/504,812, filed Oct. 2, 2014, 22 pages.
Canadian Intellectual Property Office, Canadian Office Action dated Sep. 14, 2015, issued in connection with Canadian Patent Application No. 2,842,342, 2 pages.
Notice of Allowance dated Oct. 7, 2015, issued in connection with U.S. Appl. No. 14/184,526, filed Feb. 19, 2014, 7 pages.
Notice of Allowance dated Oct. 9, 2015, issued in connection with U.S. Appl. No. 13/435,739, filed Mar. 30, 2012, 4 pages.
"Notice of Allowance dated Oct. 13, 2015, issued in connection with U.S. Appl. No. 13/864,251, filed Apr. 17, 2013, 7 pages."
Advisory Action dated Sep. 28, 2009, issued in connection with U.S. Appl. No. 10/816,217, filed Apr. 1, 2004, 4 pages.
First Action Interview Office Action Summary dated Apr. 15, 2015, issued in connection with U.S. Appl. No. 14/505,027, filed Oct. 2, 2014, 6 pages.
Advisory Action dated Jan. 5, 2012, issued in connection with U.S. Appl. No. 12/035,112, filed Feb. 21, 2008, 3 pages.
Final Office Action dated Oct. 13, 2011, issued in connection with U.S. Appl. No. 12/035,112, filed Feb. 21, 2008, 10 pages.
Final Office Action dated Feb. 18, 2009, issued in connection with U.S. Appl. No. 10/861,653, filed Jun. 5, 2004, 18 pages.
Non-Final Office Action dated Mar. 10, 2011, issued in connection with U.S. Appl. No. 12/035,112, filed Feb. 21, 2008, 12 pages.
Non-Final Office Action dated Jun. 27, 2008, issued in connection with U.S. Appl. No. 10/861,653, filed Jun. 5, 2004, 19 pages.
Notice of Allowance dated Jun. 14, 2012, issued in connection with U.S. Appl. No. 12/035,112, filed Feb. 21, 2008, 9 pages.
Notice of Allowance dated Jun. 16, 2009, issued in connection with U.S. Appl. No. 10/861,653, filed Jun. 5, 2004, 11 pages.
"Advisory Action dated Jun. 1, 2015, issued in connection with U.S. Appl. No. 14/516,867, filed Oct. 17, 2014, 11 pages".
"Baldwin, Roberto. "How-To: Setup iTunes DJ on Your Max and iPhone", available at http://www.maclife.com/article/howtos/howto_setup_itunes_dj_your_mac_and_iphone, archived on Mar. 17, 2009, 4 pages."
"Final Office Action dated Jun. 15, 2015, issued in connection with U.S. Appl. No. 14/184,522, filed Feb. 19, 2014, 25 pages".
"Non-Final Office Action dated Jun. 12, 2015, issued in connection with U.S. Appl. No. 13/848,932, filed Mar. 22, 2013, 16 pages".
"Non-Final Office Action dated Jun. 19, 2015, issued in connection with U.S. Appl. No. 13/533,105, filed Jun. 26, 2012, 38 pages."
"Non-Final Office Action dated Jun. 23, 2015, issued in connection with U.S. Appl. No. 13/705,176, filed Dec. 5, 2012, 30 pages".
"Non-Final Office Action dated Jun. 3, 2015, issued in connection with U.S. Appl. No. 14/564,544, filed Dec. 9, 2014, 7 pages."
"Non-Final Office Action dated Jun. 4, 2015, issued in connection with U.S. Appl. No. 13/871,795, filed Apr. 26, 2013, 16 pages."
"Notice of Allowance dated Jul. 2, 2015, issued in connection with U.S. Appl. No. 13/848,904, filed Mar. 22, 2013, 17 pages".
"Notice of Allowance dated Jul. 2, 2015, issued in connection with U.S. Appl. No. 13/888,203, filed May 6, 2013, 19 pages".
"Notice of Allowance dated Jul. 2, 2015, issued in connection with U.S. Appl. No. 14/184,935, filed Feb. 20, 2014, 23 pages".
"Notice of Allowance dated Jul. 6, 2015, issued in connection with U.S. Appl. No. 13/297,000, filed Nov. 15, 2011, 24 pages."
"Advisory Action dated Sep. 18, 2008 for U.S. Appl. No. 10/816,217, filed Apr. 1, 2004, 8 pages".
"Japanese Intellectual Property Office, "Decision of Rejection," issued in connection with Japanese patent application No. 2012-178711, dated Jul. 4, 2014, 3 pages".
"Japanese Intellectual Property Office, "Office Action Summary," issued in connection with Japanese patent application No. 2012-178711, dated Nov. 19, 2013, 5 pages".
"Non-Final Office Action dated Apr. 19, 2010 for U.S. Appl. No. 11/801,468, filed May 9, 2007, 16 pages".
"Non-Final Office Action dated Jul. 25, 2014 for U.S. Appl. No. 14/184,526, filed Feb. 19, 2014".
"Non-Final Office Action dated Nov. 29, 2010 for U.S. Appl. No. 11/801,468, filed May 9, 2007, 17 pages".
"Non-Final Office Action dated Jul. 31, 2014 for U.S. Appl. No. 13/533,105, filed Jun. 26, 2012".

(56) **References Cited**

OTHER PUBLICATIONS

"Notice of Allowance dated May 6, 2011 for U.S. Appl. No. 11/801,468, filed May 9, 2007, 10 pages".
Creative, "Connecting Bluetooth Devices with Creative D200," http://support.creative.com/kb/ShowArticle.aspx?url=http://ask.creative.com:80/SRVS/CGI-BIN/WEBCGI.EXE/,/?St=106,E=0000000000396859016,K=9377,Sxi=8, VARSET=ws:http://us.creative.com,case=63350>, available on Nov. 28, 2011, 2 pages.
"Advisory Action dated Mar. 2, 2015, issued in connection with U.S. Appl. No. 13/848,932, filed Mar. 22, 2013, 3 pages."
"Advisory Action dated Feb. 26, 2015, issued in connection with U.S. Appl. No. 14/184,528, filed Feb. 19, 2014, 3 pages."
"Final Office Action dated Feb. 11, 2015, issued in connection with U.S. Appl. No. 14/184,526, filed Feb. 19, 2014, 13 pages".
"Final Office Action dated Feb. 11, 2015, issued in connection with U.S. Appl. No. 14/184,935, filed Feb. 20, 2014, 17 pages".
"Final Office Action dated Feb. 12, 2015, issued in connection with U.S. Appl. No. 14/184,522, filed Feb. 19, 2014, 20 pages".
"International Bureau,"International Preliminary Report on Patentability" issued in connection with International Patent application No. PCT/US2013/046372, dated Dec. 31, 2014, 5 pages."
"International Preliminary Report on Patentability and Written Opinion, issued by the International Searching Authority in connection with International Patent Application No. PCT/US2013/046386, dated Jan. 8, 2015, 8 pages".
"Non-Final Office Action dated Feb. 26, 2015, issued in connection with U.S. Appl. No. 14/186,850, filed Feb. 21, 2014, 25 pages."
"Non-Final Office Action dated Jan. 30, 2015, issued in connection with U.S. Appl. No. 14/504,812, filed Oct. 2, 2014, 13 pages".
"Non-Final Office Action dated Jan. 30, 2015, issued in connection with U.S. Appl. No. 14/290,493, filed May 29, 2014, 29 pages."
Final Office Action dated Mar. 3, 2015, issued in connection with U.S. Appl. No. 13/864,251, filed Apr. 17, 2013, 13 pages.
"International Bureau,"Search Report" issued in connection with International Patent application No. PCT/US2013/046372, dated Aug. 26, 2013, 3 pages."
"International Bureau,"Written opinion" issued in connection with International Patent application No. PCT/US2013/046372, dated Aug. 26, 2013, 4 pages."
"International Search Report, issued by the International Searching Authority in connection with PCT Application No. PCT/US2013/046386, dated Sep. 30, 2013, 3 pages."
M. Nilsson., "ID3 Tag Version 2", Mar. 26, 1998, 28 Pages.
"Non-final Office Action in connection with U.S. Appl. No. 13/619,237, dated Apr. 10, 2013", United States Patent and Trademark Office, 10 pages.
"Non-Final Office Action dated Nov. 25, 2013 for U.S. Appl. No. 13/533,105, filed Jun. 26, 2012."
"Notice of Allowability in U.S. Appl. No. 13/619,237", dated Sep. 6, 2013, 4 pages.
"Polycom Conference Composer manual: copyright 2001".
"Written Opinion of the International Searching Authority. issued by the International Searching Authority in connection with PCT Application No. PCT/US2013/046386, dated Sep. 30, 2013, 6 pages."
"Yamaha DME 32 manual: copyright 2001".
"Advisory Action dated Sep. 5, 2014 for U.S. Appl. No. 13/907,666, filed May 31, 2013, 3 pages".
"Bluetooth. "Specification of the Bluetooth System: The ad hoc SCATTERNET for affordable and highly functional wireless connectivity" Core, Version 1.0 A, Jul. 26, 1999, 1068 pages".
"Bluetooth. "Specification of the Bluetooth System: Wireless connections made easy" Core, Version 1.0 B, Dec. 1, 1999, 1076 pages".
"Dell, Inc. "Dell Digital Audio Receiver: Reference Guide" Jun. 2000, 70 pages".
"Dell, Inc. "Start Here" Jun. 2000, 2 pages".
"Final Office Action dated Oct. 22, 2014, issued in connection with U.S. Appl. No. 14/186,850, filed Feb. 21, 2014, 12 pages".
"Final Office Action dated Oct. 23, 2014, issued in conection with U.S. Appl. No. 13/705,176, filed Dec. 5, 2012, 23 pages".
"Jones, Stephen. "Dell Digital Audio Receiver: Digital upgrade for your analog stereo" Analog Stereo. Jun. 24, 2000 <http://www.reviewsonline.com/articles/961906864.htm> retrieved Jun. 18, 2014, 2 pages".
"Louderback, Jim. "Affordable Audio Receiver Furnishes Homes With MP3" TechTV Vault. Jun. 28, 2000 <http://www.g4tv.com/articles/17923/affordable-audio-receiver-furnishes-homes-with-mp3/> retrieved Jul. 10, 2014, 2 pages".
"Non-Final Office Action dated Jul. 25, 2014 for U.S. Appl. No. 14/184,935, filed Feb. 20, 2014".
"Non-Final Office Action dated Oct. 23, 2014, issued in connection with U.S. Appl. No. 13/848,904, filed Mar. 22, 2013, 11 pages".
"Non-Final Office Action dated Oct. 23, 2014, issued in connection with U.S. Appl. No. 13/864,251, filed Apr. 17, 2013, 11 pages".
"Non-Final Office Action dated Oct. 23, 2014, issued in connection with U.S. Appl. No. 13/888,203, filed May 6, 2013, 9 pages".
"Non-final Office Action dated Oct. 24, 2014, issued in connection with U.S. Appl. No. 13/435,776, filed Mar. 30, 2012, 14 pages".
"Notice of Allowance dated Sep. 25, 2014, issued in connection with U.S. Appl. No. 14/176,808, filed Feb. 10, 2014, 5 pages".
"Palm, Inc. "Handbook for the Palm VII Handheld" May 2000, 311 pages".
"Welcome. You're watching Apple TV." Apple TV 1st Generation Setup Guide, Apr. 8, 2008 <http://manuals.info.apple.com/MANUALS/0/MA403/en_US/AppleTV_SetupGuide.pdf> Retrieved Oct. 14, 2014, 40 pages.
"Welcome. You're watching Apple TV." Apple TV 2nd Generation Setup Guide, Mar. 10, 2011 <http://manuals.info.apple.com/MANUALS/1000/MA1555/en_US/Apple_TV_2nd_gen_Setup_Guide.pdf> Retrieved Oct. 16, 2014, 35 pages.
"Welcome. You're watching Apple TV." Apple TV 3rd Generation Setup Guide, Mar. 16, 2012 <http://http://manuals.info.apple.com/MANUALS/1000/MA1607/en_US/apple_tv_3rd_gen_setup.pdf> Retrieved Oct. 16, 2014, 35 pages.
Presentations at WinHEC 2000, May 2000, 139 pages.
Implicit, LLC v. *Sonos, Inc.* (No. 14-1330-RGA), Defendant's Original Complaint (Mar. 3, 2017) (15 pages).
Sonos, Inc. v. *D&M Holdings, Inc.* (No. 14-1330-RGA), Defendants' Final Invalidity Contentions (Jan. 18, 2017) (106 pages).
Notice of Allowance dated Mar. 9, 2017, issued in connection with U.S. Appl. No. 15/080,591, filed Mar. 25, 2016, 7 pages.
Notice of Allowance dated Feb. 10, 2017, issued in connection with U.S. Appl. No. 14/290,493, filed May 29, 2014, 13 pages.
Notice of Allowance dated Mar. 15, 2017, issued in connection with U.S. Appl. No. 15/080,716, filed Mar. 25, 2016, 7 pages.
Notice of Allowance dated Mar. 30, 2017, issued in connection with U.S. Appl. No. 15/088,532, filed Apr. 1, 2017, 7 pages.
Rothermel et al., "Clock Hierarchies—An Abstraction for Grouping and Controlling Media Streams," University of Stuttgart Institute of Parallel and Distributed High-Performance Systems, Jan. 1996, 23 pages.
Rothermel, Kurt, "State-of-the-Art and Future Research in Stream Synchronization," University of Stuttgart, 3 pages.
Sonos, Inc. v *D&M Holdings*, D&M Supp Opposition Brief including Exhibits, Mar. 17, 2017, 23 pages.
Sonos, Inc. v. *D&M Holdings*, Expert Report of Jay P. Kesan including Appendices A-P, Feb. 20, 2017, 776 pages.
Sonos, Inc. v. *D&M Holdings* (No. 14-1330-RGA), DI 226, Opinion Denying Inequitable Conduct Defenses, Feb. 6, 2017, updated, 5 pages.
Sonos, Inc. v. *D&M Holdings* (No. 14-1330-RGA), DI 242, US District Judge Andrews 101 Opinion, Mar. 13, 2017, 16 pages.
Sonos, Inc. v *D&M Holdings*, Sonos Supp Opening Markman Brief including Exhibits, Mar. 3, 2017, 17 pages.
Sonos, Inc. v. *D&M Holdings*, Sonos Supp Reply Markman Brief including Exhibits, Mar. 29, 2017, 36 pages.
Advisory Action dated Dec. 28, 2016, issued in connection with U.S. Appl. No. 13/705,176, filed Dec. 5, 2012, 4 pages.
Chinese Office Action, Office Action dated Dec. 20, 2016, issued in connection with Chinese Application No. 201380044446.8, 16 pages.

(56) **References Cited**

OTHER PUBLICATIONS

Dhir, Amit, "Wireless Home Networks—DECT, Bluetooth, Home RF, and Wirelss LANs," XILINX, wp135 (v1.0), Mar. 21, 2001, 18 pages.
European Patent Office, Office Action dated Nov. 25, 2016, issued in connection with EP Application No. 13810340.3, 5 pages.
Final Office Action dated Jan. 12, 2017, issued in connection with U.S. Appl. No. 14/504,812, filed Oct. 2, 2014, 25 pages.
Final Office Action dated Dec. 13, 2016, issued in connection with U.S. Appl. No. 13/871,795, filed Apr. 26, 2013, 41 pages.
Fout, Tom, "Universal Plug and Play (UPnP) Client Support," Microsoft, Aug. 2001, 18 pages.
Japanese Patent Office, Final Office Action dated Nov. 8, 2016, issued in connection with Japanese Patent Application No. 2015-520286, 5 pages.
Japanese Patent Office, Office Action dated Nov. 22, 2016, issued in connection with Japanese Application No. 2015-520288, 6 pages.
Japanese Patent Office, Office Action dated Nov. 29, 2016, issued in connection with Japanese Application No. 2015-516169, 4 pages.
Kou et al., "RenderingControl:1 Service Template Verion 1.01," Contributing Members of the UPnP Forum, Jun. 25, 2002, 63 pages.
"Linux SDK for UPnP Devices vl.2," Intel Corporation, Jan. 17, 2003, 102 pages.
Non-Final Office Action dated Jan. 3, 2017, issued in connection with U.S. Appl. No. 14/808,875, filed Jul. 24, 2015, 10 pages.
Non-Final Office Action dated Nov. 10, 2016, issued in connection with U.S. Appl. No. 15/243,355, filed Aug. 22, 2016, 11 pages.
Non-Final Office Action dated Jan. 12, 2017, issued in connection with U.S. Appl. No. 13/895,076, filed May 15, 2013, 10 pages.
Non-Final Office Action dated Nov. 16, 2016, issued in connection with U.S. Appl. No. 15/228,639, filed Aug. 4, 2016, 15 pages.
Non-Final Office Action dated Nov. 29, 2016, issued in connection with U.S. Appl. No. 13/894,179, filed May 14, 2013, 14 pages.
Non-Final Office Action dated Nov. 30, 2016, issued in connection with U.S. Appl. No. 15/243,186, filed Aug. 22, 2016, 12 pages.
Notice of Allowance dated Dec. 1, 2016, issued in connection with U.S. Appl. No. 15/088,283, filed Apr. 1, 2016, 9 pages.
Notice of Allowance dated Dec. 2, 2016, issued in connection with U.S. Appl. No. 15/088,532, filed Apr. 1, 2016, 9 pages.
Notice of Allowance dated Dec. 2, 2016, issued in connection with U.S. Appl. No. 15/088,678, filed Apr. 1, 2016, 9 pages.
Notice of Allowance dated Dec. 2, 2016, issued in connection with U.S. Appl. No. 15/089,758, filed Apr. 4, 2016, 9 pages.
Notice of Allowance dated Dec. 2, 2016, issued in connection with U.S. Appl. No. 15/155,149, filed May 16, 2016, 9 pages.
Notice of Allowance dated Dec. 7, 2016, issued in connection with U.S. Appl. No. 15/156,392, filed May 17, 2016, 9 pages.
Notice of Allowance dated Dec. 13, 2016, issued in connection with U.S. Appl. No. 15/080,591, filed Mar. 25, 2016, 9 pages.
Notice of Allowance dated Dec. 14, 2016, issued in connection with U.S. Appl. No. 15/088,906, filed Apr. 1, 2016, 9 pages.
Notice of Allowance dated Dec. 22, 2016, issued in connection with U.S. Appl. No. 15/080,716, filed Mar. 25, 2016, 9 pages.
Pascoe, Bob, "Salutation Architectures and the newly defined service discovery protocols from Microsoft® and Sun®," Salutation Consortium, White Paper, Jun. 6, 1999, 5 pages.
Ritchie et al., "MediaServer:1 Device Template Version 1.01," Contributing Members of the UPnP Forum, Jun. 25, 2002, 12 pages.
Ritchie et al., "UPnP AV Architecture:1, Version 1.0," Contributing Members of the UPnP Forum, Jun. 25, 2002, 22 pages.
Ritchie, John, "MediaRenderer:1 Device Template Version 1.01," Contributing Members of the UPnP Forum, Jun. 25, 2002, 12 pages.
Schulzrinne et al., "RTP: A Transport Protocol for Real-Time Applications," Network Working Group, Jan. 1996, pp. 1-75.
United States Patent and Trademark Office, U.S. Appl. No. 60/490,768, filed Jul. 28, 2003, entitled "Method for synchronizing audio playback between multiple networked devices," 13 pages.
United States Patent and Trademark Office, U.S. Appl. No. 60/825,407, filed Sep. 12, 2003, entitled "Controlling and manipulating groupings in a multi-zone music or media system," 82 pages.
"UPnP and Sonos Questions," Sonos Community, Dec. 2006, 5 pages.
Yamaha DME 64 Owner's Manual; copyright 2004, 80 pages.
Yamaha DME Designer 3.5 setup manual guide; copyright 2004, 16 pages.
Yamaha DME Designer 3.5 User Manual; Copyright 2004, 507 pages.
Sonos, Inc. v. *D&M Holdings Inc. et al.*, Defendant's Amended Invalidity Contentions Exhibit 1: Defendants' Invalidity Contentions for U.S. Pat. No. 7,571,014 filed Sep. 16, 2016, 270 pages.
Sonos, Inc. v. *D&M Holdings Inc. et al.*, Defendant's Amended Invalidity Contentions Exhibit 10: Defendants' Invalidity Contentions for U.S. Pat. No. 9,219,959 filed Sep. 27, 2016, 236 pages.
Sonos, Inc. v. *D&M Holdings Inc. et al.*, Defendant's Amended Invalidity Contentions Exhibit 11: Defendants' Invalidity Contentions for Design U.S. Pat. No. D. 559,197 filed Sep. 27, 2016, 52 pages.
Sonos, Inc. v. *D&M Holdings Inc. et al.*, Defendant's Amended Invalidity Contentions Exhibit 2: Defendants' Invalidity Contentions for U.S. Pat. No. 8,588,949 filed Sep. 27, 2016, 224 pages.
Sonos, Inc. v. *D&M Holdings Inc. et al.*, Defendant's Amended Invalidity Contentions Exhibit 3: Defendants' Invalidity Contentions for U.S. Pat. No. 8,843,224 filed Sep. 27, 2016, 147 pages.
Sonos, Inc. v. *D&M Holdings Inc. et al.*, Defendant's Amended Invalidity Contentions Exhibit 4: Defendants' Invalidity Contentions for U.S. Pat. No. 8,938,312 filed Sep. 27, 2016, 229 pages.
Sonos, Inc. v. *D&M Holdings Inc. et al.*, Defendant's Amended Invalidity Contentions Exhibit 5: Defendants' Invalidity Contentions for U.S. Pat. No. 8,938,637 filed Sep. 27, 2016, 213 pages.
Sonos, Inc. v. *D&M Holdings Inc. et al.*, Defendant's Amended Invalidity Contentions Exhibit 6: Defendants' Invalidity Contentions for U.S. Pat. No. 9,042,556 filed Sep. 27, 2016, 162 pages.
Sonos, Inc. v. *D&M Holdings Inc. et al.*, Defendant's Amended Invalidity Contentions Exhibit 7: Defendants' Invalidity Contentions for U.S. Pat. No. 9,195,258 filed Sep. 27, 2016, 418 pages.
Sonos, Inc. v. *D&M Holdings Inc. et al.*, Defendant's Amended Invalidity Contentions Exhibit 8: Defendants' Invalidity Contentions for U.S. Pat. No. 9,202,509 filed Sep. 27, 2016, 331 pages.
Sonos, Inc. v. *D&M Holdings Inc. et al.*, Defendant's Amended Invalidity Contentions Exhibit 9: Defendants' Invalidity Contentions for U.S. Pat. No. 9,213,357 filed Sep. 27, 2016, 251 pages.
Sonos, Inc. v. *D&M Holdings Inc. et al.*, Defendants' Brief in Support of their Motion for Leave to Amend their Answer to Add the Defense of Inequitable Conduct, provided Oct. 12, 2016, 24 pages.
Sonos, Inc. v. *D&M Holdings Inc. et al.*, Redlined Exhibit B: Defendants' First Amended Answer to Plaintiffs' Third Amended Complaint, provided Aug. 1, 2016, 27 pages.
Sonos, Inc. v. *D&M Holdings Inc. et al.*, Reply Brief in Support of Defendants' Motion for Leave to Amend their Answer to Add the Defense of Inequitable Conduct, provided Nov. 10, 2016, 16 pages.
Sonos, Inc. v. *D&M Holdings Inc. et al.*, Reply Brief in Support of Defendants' Motion for Leave to Amend their Answer to Add the Defense of Inequitable Conduct, provided Sep. 9, 2016, 16 pages.
Sonos, Inc. v. *D&M Holdings Inc. et al.*, Sonos's Motion to Strike Defendants' New Amended Answer Submitted with their Reply Brief, provided Sep. 15, 2016, 10 pages.
Sonos, Inc. v. *D&M Holdings Inc. et al.*, Sonos's Opposition to Defendants' Motion for Leave to Amend their Answer to Add the Defense of Inequitable Conduct, provided Oct. 31, 2016, 26 pages.
Sonos, Inc. v. *D&M Holdings* (No. 14-1330-RGA), DI 206-1, Transcript of 101 Hearing (Nov. 28, 2016) (28 pages).
Sonos, Inc. v. *D&M Holdings* (No. 14-1330-RGA), DI 207, Public Joint Claim Construction Brief (Nov. 30, 2016) (88 pages).
Sonos, Inc. v. *D&M Holdings* (No. 14-1330-RGA), Markman Hearing Transcript (Dec. 14, 2016) (69 pages).
Sonos, Inc. v. *D&M Holdings* (No. 14-1330-RGA), DI 214, D&M Post-Markman Letter (Dec. 22, 2016) (13 pages).
Sonos, Inc. v. *D&M Holdings* (No. 14-1330-RGA), DI 215, Sonos Post-Markman Letter (Dec. 22, 2016) (15 pages).
Sonos, Inc. v. *D&M Holdings* (No. 14-1330-RGA), DI 219, Claim Construction Opinion (Jan. 12, 2017) (24 pages).

(56) **References Cited**

OTHER PUBLICATIONS

Sonos, Inc. v. *D&M Holdings* (No. 14-1330-RGA), DI 221, Claim Construction Order (Jan. 18, 2017) (2 pages).
Universal Plug and Play ("UPnP") AV Architecture:1 for UPnP, Version 1.0, (Jun. 25, 2002) (D+M_0298151-72) (22 pages).
UPnP AV Architecture:0.83 (Jun. 12, 2002) (SONDM000115483-504) (22 pages).
RenderingControl:1 Service Template Version 1.01 for UPnP, Version 1.0, (Jun. 25, 2002) (SONDM000115187-249) (63 pages).
MediaServer:1 Device Template Version 1.01 for UPnP, Version 1.0 (Jun. 25, 2002) (12 pages).
Universal Plug and Play Device Architecture V. 1.0, (Jun. 8, 2000) (54 pages).
MediaRenderer:1 Device Template Version 1.01 for UPnP, Version 1.0 (Jun. 25, 2002) (12 pages).
AVTransport:1 Service Template Version 1.01 for UPnP, Version 1.0 (Jun. 25, 2002) (66 pages).
Connection Manager: 1 Service Template Version 1.01 for UPnP, Version 1.0 (Jun. 25, 2002) (25 pages).
ContentDirectory:1 Service Template Version 1.01 for UPnP, Version 1.0 (Jun. 25, 2002) (89 pages).
WANCommonInterfaceConfig:1 Service Template Version 1.01 for UPnP, Ver. 1.0 (Nov. 12, 2001) (D+M_0401820-43) (24 pages).
WANIPConnection:1 Service Template Version 1.01 for UPnP Ver. 1.0 (Nov. 12, 2001) (D+M_0401844-917) (74 pages).
WANPPPConnection:1 Service Template Version 1.01 for UPnP, Version 1.0 (Nov. 12, 2001) (D+M_0401918-2006) (89 pages).
Intel Media Renderer Device Interface ("Intel Media Renderer") (Sep. 6, 2002) (62 pages).
Intel Designing a UPnP AV Media Renderer, v. 1.0 ("Intel AV Media Renderer") (May 20, 2003) (SONDM000115117-62) (46 pages).
Windows Media Connect Device Compatibility Specification (Apr. 12, 2004) (16 pages).
Universal Plug and Play Vendor's Implementation Guide (Jan. 5, 2000) (7 pages).
Intel SDK for UPnP Devices Programming Guide, Version 1.2.1, (Nov. 2002) (30 pages).
Linux SDK for UPnP Devices v. 1.2 (Sep. 6, 2002) (101 pages).
Designing a UPnP AV MediaServer, Nelson Kidd (2003) (SONDM000115062-116) (55 pages).
Simple Service Discovery Protocol/1.0 Operating without an Arbiter (Oct. 28, 1999) (24 pages).
General Event Notification Architecture Base: Client to Arbiter (Apr. 2000) (23 pages).
Microsoft, Universal Plug and Play (UPnP) Client Support ("Microsoft UPnP") (Aug. 2001) (D+M_0402007-24) (18 pages).
Home Networking with Universal Plug and Play, IEEE Communications Magazine, vol. 39 No. 12 (Dec. 2001) (D+M_0402025-40) (16 pages).
Universal Plug and Play in Windows XP, Tom Fout. Microsoft Corporation (Jul. 2001) (D+M_0402041-73) (33 pages).
Understanding Universal Plug and Play, Microsoft White Paper (Jun. 2000) (D+M_0402074-118) (45 pages).
Microsoft Window's XP Reviewer's Guide (Aug. 2001) (D+M_0402225-85) (61 pages).
Simple Network Time Protocol (SNTPI), RFC 1361 (Aug. 1992) (D+M_0397537-46) (10 pages).
Simple Network Time Protocol (SNTPII), RFC 1769 (Mar. 1995) (D+M_0397663-76) (14 pages).
Realtime Transport Protocol (RTP), RFC 3550 (Jul. 2003) (D+M_0398235-323) (89 pages).
Real Time Control Protocol (RTCP) and Realtime Transfer Protocol (RIP), RFC 1889 (Jan. 1996) (D+M_0397810-84) (75 pages).
Realtime Streaming Protocol (RTSP), RFC 2326 (Apr. 1998) (D+M_0397945-8036) (92 pages).
Network Time Protocol (NTP), RFC 1305 (Mar. 1992) (D+M_0397417-536) (120 pages).
UPnP Design by Example, A Software Developers Guide to Universal Plug and Play Michael Jeronimo and Jack Weast, Intel Press (D+M_0401307-818) (Apr. 2003) (511 pages).
Sonos, Inc. v. *D&M Holdings* (No. 14-1330-RGA), DI 226, Opinion Denying Inequitable Conduct Defenses (Feb. 6, 2017) (5 pages).
Sonos, Inc. v. *D&M Holdings* (No. 14-1330-RGA), DI 227, Order Denying Inequitable Conduct Defenses (Feb. 6, 2017) (1 page).
Sonos, Inc. v. *D&M Holdings Inc. et al.*, Defendants' Opposition to Sonos's Motion to Strike Defendants' New Amended Answer Submitted with their Reply, provided Oct. 3, 2016, 15 pages.
Sonos, Inc. v. *D&M Holdings Inc. et al.*, Exhibit A: Defendants' First Amended Answer to Plaintiffs' Third Amended Complaint, provided Aug. 1, 2016, 26 pages.
Sonos, Inc. v. *D&M Holdings Inc. et al.*, Exhibit A: Defendants' Second Amended Answer to Plaintiffs' Third Amended Complaint, provided Oct. 12, 2016, 43 pages.
Sonos, Inc. v. *D&M Holdings Inc. et al.*, Exhibit A: Defendants' Second Amended Answer to Plaintiffs' Third Amended Complaint, provided Sep. 9, 2016, 88 pages.
Sonos, Inc. v. *D&M Holdings Inc. et al.*, Exhibit B: Defendants' Second Amended Answer to Plaintiffs' Third Amended Complaint, provided Oct. 12, 2016, 43 pages.
Sonos, Inc. v. *D&M Holdings Inc. et al.*, Opening Brief in Support of Defendants' Motion for Leave to Amend Their Answer to Add the Defense of Inequitable Conduct, provided Aug. 1, 2016, 11 pages.
Sonos, Inc. v. *D&M Holdings Inc. et al.*, Order, provided Oct. 7, 2016, 2 pages.
Sonos, Inc. v. *D&M Holdings Inc. et al.*, Plaintiff's Opposition to Defendants' Motion for Leave to Amend Their Answer to Add the Defense of Inequitable Conduct, provided Aug. 26, 2016, 25 pages.
European Patent Office, Examination Report dated Oct. 24, 2016, issued in connection with European Patent Application No. 13808623.6, 4 pages.
"Final Office Action dated Oct. 19, 2016, issued in connection with U.S. Appl. No. 13/848,921, filed Mar. 22, 2013, 14 pages".
Non-Final Office Action dated Nov. 3, 2016, issued in connection with U.S. Appl. No. 14/184,528, filed Feb. 19, 2014, 17 pages.
Non-Final Office Action dated Oct. 4, 2016, issued in connection with U.S. Appl. No. 15/089,758, filed Apr. 4, 2016, 9 pages.
Non-Final Office Action dated Oct. 5, 2016, issued in connection with U.S. Appl. No. 13/864,250, filed Apr. 17, 2013, 10 pages.
Non-Final Office Action dated Oct. 5, 2016, issued in connection with U.S. Appl. No. 13/864,252, filed Apr. 17, 2013, 11 pages.
Non-Final Office Action dated Oct. 6, 2016, issued in connection with U.S. Appl. No. 15/088,678, filed Apr. 1, 2016, 9 pages.
Non-Final Office Action dated Oct. 7, 2016, issued in connection with U.S. Appl. No. 15/156,392, filed May 17, 2016, 8 pages.
Non-Final Office Action dated Sep. 21, 2016, issued in connection with U.S. Appl. No. 15/080,591, filed Mar. 25, 2016, 9 pages.
Non-Final Office Action dated Sep. 21, 2016, issued in connection with U.S. Appl. No. 15/080,716, filed Mar. 25, 2016, 8 pages.
Non-Final Office Action dated Sep. 21, 2016, issued in connection with U.S. Appl. No. 15/088,283, filed Apr. 1, 2016, 8 pages.
Non-Final Office Action dated Sep. 21, 2016, issued in connection with U.S. Appl. No. 15/088,532, filed Apr. 1, 2016, 9 pages.
Non-Final Office Action dated Sep. 22, 2016, issued in connection with U.S. Appl. No. 15/088,906, filed Apr. 1, 2016, 9 pages.
Non-Final Office Action dated Sep. 22, 2016, issued in connection with U.S. Appl. No. 15/155,149, filed May 16, 2016, 7 pages.
Notice of Allowance dated Oct. 19, 2016, issued in connection with U.S. Appl. No. 14/290,493, filed May 29, 2014, 14 pages.
"884+ Automatic Matrix Mixer Control System," Ivie Technologies, Inc., 2000, pp. 1-4.
Barham et al., "Wide Area Audio Synchronisation," University of Cambridge Computer Laboratory, 1995, 5 pages.
Brassil et al., "Enhancing Internet Streaming Media with Cueing Protocols," 2000, 9 pages.
Cen et al., "A Distributed Real-Time MPEG Video Audio Player," Department of Computer Science and Engineering. Oregon Graduate Institute of Science and Technology, 1995, 12 pages.
Chinese Office Action dated Jul. 5, 2016, issued in connection with Chinese Patent Application No. 201380044380.2, 25 pages.
Dannenberg et al., "A. System Supporting Flexible Distributed Real-Time Music Processing," Proceedings of the 2001 International Computer Music Conference, 2001, 4 pages.

(56) **References Cited**

OTHER PUBLICATIONS

Dannenberg; Roger B., "Remote Access to Interactive Media," Proceedings of the SPIE 1785, 1993, pp. 230-237.
Day, Rebecca, "Going Elan!" Primedia Inc., 2003, 4 pages.
Fober et al., "Clock Skew Compensation over a High Latency Network," Proceedings of the ICMC, 2002, pp. 548-552.
Ishibashi et al., "A Comparison of Media Synchronization Quality Among Reactive Control Schemes," IEEE Infocom, 2001, pp. 77-84.
"A/V Surround Receiver AVR-5800," Denon Electronics, 2000, 2 pages.
"A/V System Controleer, Owner's Manual," B&K Compontents, Ltd., 1998, 52 pages.
"DP-0206 Digital Signal Processor," TOA Electronics, Inc., 2001, pp. 1-12.
"Home Theater Control Systems," Cinema Source, 2002, 19 pages.
"Model MRC44 Four Zone—Four Source Audio/Video Controller/Amplifier System," Xantech Corporation, 2002, 52 pages.
"NexSys Software v. 3 Manual," Crest Audio, Inc., 1997, 76 pages.
"Residential Distributed Audio Wiring Practices," Leviton Network Solutions, 2001, 13 pages.
"RVL-6 Modular Multi-Room Controller, Installation & Operation Guide," Nile Audio Corporations, 1999, 46 pages.
"Systemline Modular Installation Guide, Multiroom System," Systemline, 2003, pp. 1-22.
"ZR-8630AV MultiZone Audio/Video Receiver, Installation and Operation Guide," Niles Audio Corporation, 2003, 86 pages.
'ZX135: Installation Manual, LA Audio, Apr. 2003, 44 pages.
Lienhart et al., "On the Importance of Exact Synchronization for Distributed Audio Signal Processing," Session L: Poster Session II—ICASSP'03 Papers, 2002, 1 page.
Liu et al., "A synchronization control scheme for real-time streaming multimedia applications," Packet Video, 2003, 10 pages, vol. 2003.
Liu et al., "Adaptive Delay Concealment for Internet Voice Applications with Packet-Based Time-Scale Modification." Information Technologies 2000, pp. 91-102.
Non-Final Office Action dated Sep. 7, 2016, issued in connection with U.S. Appl. No. 13/864,248, filed Apr. 17, 2013, 12 pages.
Non-Final Office Action dated Aug. 9, 2016, issued in connection with U.S. Appl. No. 13/871,795, filed Apr. 26, 2013, 31 pages.
Notice of Allowance dated Aug. 30, 2016, issued in connection with U.S. Appl. No. 14/290,493, filed May 29, 2014, 7 pages.
Pillai et al., "A Method to Improve the Robustness of MPEG Video Applications over Wireless Networks," Kent Ridge Digital Labs, 2000, 15 pages.
Rangan et al., "Feedback Techniques for Continuity and Synchronization in Multimedia Information Retrieval," ACM Transactions on Information Systems, 1995, pp. 145-176, vol. 13, No. 2.
Reid; Mark, "Multimedia conferencing over ISDN and IP networks using ITU-T H-series recommendations: architecture, control and coordination," Computer Networks, 1999, pp. 225-235, vol. 31.
Rothermel et al., "An Adaptive Protocol for Synchronizing Media Streams," 5th International Workshop on Network and Operating System Support for Digital Audio and Video, 1995, 12 pages.
Rothermel et al., "An Adaptive Stream Synchronization Protocol," 5th International Workshop on Network and Operating System Support for Digital Audio and Video, Apr. 18-21, 1995, 12 pages.
Rothermel et al., "Svnchronization in Joint-Viewing Environments," University of Stuttgart Institute of Parallel and Distributed High-Performance Systems, 1992, 13 pages.
Sonos, Inc. v. *D&M Holdings Inc. et al.*, Defendant's Initial Invalidity Contentions Exhibit 1: Defendants' Invalidity Contentions for U.S. Pat. No. 7,571,014 filed Apr. 15, 2016, 161 pages.
Sonos, Inc. v. *D&M Holdings Inc. et al.*, Defendant's Initial Invalidity Contentions Exhibit 10: Defendants' Invalidity Contentions for U.S. Pat. No. 9,213,357 filed Apr. 15, 2016, 244 pages.
Sonos, Inc. v. *D&M Holdings Inc. et al.*, Defendant's Initial Invalidity Contentions Exhibit 2: Defendants' Invalidity Contentions for U.S. Pat. No. 8,588,949 filed Apr. 15, 2016, 112 pages.
Sonos, Inc. v. *D&M Holdings Inc. et al.*, Defendant's Initial Invalidity Contentions Exhibit 5: Defendants' Invalidity Contentions for U.S. Pat. No. 8,938,637 filed Apr. 15, 2016, 177 pages.
Sonos, Inc. v. *D&M Holdings Inc. et al.*, Defendant's Initial Invalidity Contentions Exhibit 8: Defendants' Invalidity Contentions for U.S. Pat. No. 9,195,258 filed Apr. 15, 2016, 400 pages.
Taylor, Marilou, "Long Island Sound," Audio Video Interiors, Apr. 2000, 8 pages.
Akyildiz et al., "Multimedia Group Synchronization Protocols for Integrated Services Networks," IEEE Journal on Selected Areas in Communications, 1996, pp. 162-173, vol. 14, No. 1.
Integra Audio Network Server NAS 2.3 Instruction Manual, pp. 1-32.
Integra Audio Network Receiver NAC 2.3 Instruction Manual, 68 pages.
"A/V System Controller, Owner's Manual," B&K Compontents, Ltd., 1998, 52 pages.
"Denon 2003-2004 Product Catalog," Denon, 2003-2004, 44 pages.
Breebaart et al., "Multi-Channel Goes Mobile: MPEG Surround Binaural Rendering", AES 29th International Conference, Sep. 2-4, 2006, 1-13.
Faller, Christof, "Coding of Spatial Audio Compatible with Different Playback Formats", Audio Engineering Society Convention Paper (Presented at the 117th Convention), Oct. 28-31, 2004, 12 pages.
Herre et al., "The Reference Model Architecture for MPEG Spatial Audio Coding", Audio Engineering Society Convention Paper (Presented at the 118th Convention), May 28-31, 2005, 13 pages.
Proficient Audio Systems M6 Quick Start Guide, 2011, 5 pages.
Proficient Audio Systems: Proficient Editor Advanced Programming Guide, 2007, 40 pages.
Parasound Zpre2 Zone Preamplifier with PTZI Remote Control, 2005, 16 pages.
Denon AV Surround Receiver AVR-1604/684 User's Manual, 2004, 128 pages.
LG: RJP-201M Remote Jack Pack Installation and Setup Guide, 2010, 24 pages.
Radio Shack, "Auto-Sensing 4-Way Audio/Video Selector Switch", 2004, 1 page.
AudioSource: AMP 100 User Manual, 2003, 4 pages.
Audio Authority: Model 1154B High Definition AV Auto Selector, 2008, 8 pages.
AXIS Communication: AXIS P8221 Network I/O Audio Module, 2009, 41 pages.
Lake Processors: Lake® LM Series Digital Audio Processors Operation Manual, 2011, 71 pages.
Audio Authority: How to Install and Use the Model 1154 Signal Sensing Auto Selector, 2002, 4 pages.
Sony: Multi Channel AV Receiver Operating Instructions for STR-DG710, 2007, 80 pages.
Balfanz et al., "Network-in-a-Box: How to Set Up a Secure Wireless Network in Under a Minute", 13th USENIX Security Symposium—Technical Paper, 2002, 23 pages.
Balfanz et al., "Talking to Strangers: Authentication in Ad-Hoc Wireless Networks", Xerox Palo Alto Research Center, 2002, 13 pages.
Rothermel et al., "An Adaptive Protocol for Synchronizing Media Streams", Institute of Parallel and Distributed High-Performance Systems (IPVR), 1997, 26 pages.
Rothermel et al., "Synchronization in Joint-Viewing Environments", University of Stuttgart Institute of Parallel and Distributed High-Performance Systems, 1992, 13 pages.
Rangan et al., "Feedback Techniques for Continuity and Synchronization in Multimedia Information Retrieval", ACM Transactions on Information Systems, 1995, 13(2), 145-176.
Sonos, Inc. v. *D&M Holdings Inc. et al.*, Defendant's Initial Invalidity Contentions Exhibit 3: Defendants' Invalidity Contentions for U.S. Pat. No. 8,843,224 filed Apr. 15, 2016, 118 pages.
Sonos, Inc. v. *D&M Holdings Inc. et al.*, Defendant's Initial Invalidity Contentions Exhibit 4: Defendants' Invalidity Contentions for U.S. Pat. No. 8,938,312 filed Apr. 15, 2016, 217 pages.

(56) **References Cited**

OTHER PUBLICATIONS

Sonos, Inc. v. *D&M Holdings Inc. et al.*, Defendant's Initial Invalidity Contentions Exhibit 6: Defendants' Invalidity Contentions for U.S. Pat. No. 9,042,556 filed Apr. 15, 2016, 86 pages.
Sonos, Inc. v. *D&M Holdings Inc. et al.*, Defendant's Initial Invalidity Contentions Exhibit 7: Defendants' Invalidity Contentions for U.S. Pat. No. 9,130,771 filed Apr. 15, 2016, 203 pages.
Sonos, Inc. v. *D&M Holdings Inc. et al.*, Defendant's Initial Invalidity Contentions Exhibit 9: Defendants' Invalidity Contentions for U.S. Pat. No. 9,202,509 filed Apr. 15, 2016, 163 pages.
Sonos, Inc. v. *D&M Holdings Inc. et al.*, Defendant's Initial Invalidity Contentions Exhibit 11: Defendants' Invalidity Contentions for U.S. Pat. No. 9,219,959 filed Apr. 15, 2016, 172 pages.
Sonos, Inc. v. *D&M Holdings Inc. et al.*, Defendant's Initial Invalidity Contentions Exhibit 12: Defendants' Invalidity Contentions for Design U.S. Pat. No. D559,197 filed Apr. 15, 2016, 36 pages.
RadioShack, Pro-2053 Scanner, 2002 Catalog, part 1, 100 pages.
RadioShack, Pro-2053 Scanner, 2002 Catalog, part 2, 100 pages.
RadioShack, Pro-2053 Scanner, 2002 Catalog, part 3, 100 pages.
RadioShack, Pro-2053 Scanner, 2002 Catalog, part 4, 100 pages.
RadioShack, Pro-2053 Scanner, 2002 Catalog, part 5, 46 pages.
Gaston et al., "Methods for Sharing Stereo and Multichannel Recordings Among Planetariums", Audio Engineering Society Convention Paper 7474, 2008, 15 pages.
Reid, Mark, "Multimedia conferencing over ISDN and IP networks using ITU-T H-series recommendations: architecture, control and coordination," Computer Networks, 1999, vol. 31, pp. 225-235.
Dannenberg; Roger B., "Remote Access to Interactive Media", Proceedings of the SPIE 1785, 1993, 230-237.
Sonos, Inc. v. *D&M Holdings Inc. et al.*, Complaint for Patent Infringement, filed Oct. 21, 2014, 20 pages.
Sonos, Inc. v. *D&M Holdings Inc. et al.*, First Amended Complaint for Patent Infringement, filed Dec. 17, 2014, 26 pages.
Sonos, Inc. v. *D&M Holdings Inc. et al.*, Second Amended Complaint for Patent Infringement, filed Feb. 27, 2015, 49 pages.
Sonos, Inc. v. *D&M Holdings Inc. et al.*, Defendants' Answer to Plaintiff's Second Amended Complaint, filed Apr. 30, 2015, 19 pages.
Sonos, Inc. v. *D&M Holdings Inc. et al.*, Defendants' Amended Answer, Defenses, and Counterclaims for Patent Infringement, filed Nov. 30, 2015, 47 pages.
Sonos, Inc. v. *D&M Holdings Inc. et al.*, Third Amended Complaint for Patent Infringement, filed Jan. 29, 2016, 47 pages.
Sonos, Inc. v. *D&M Holdings Inc. et al.*, Opening Brief in Support of Defendants' Partial Motion for Judgment on the Pleadings for Lack of Patent-Eligible Subject Matter, filed May 6, 2016, 27 pages.
Sonos, Inc. v. *D&M Holdings Inc. et al.*, Plaintiff Sonos, Inc.'s Response in Opposition to Defendants' Partial Motion for Judgment on the Pleadings, filed May 27, 2016, 24 pages.
Sonos, Inc. v. *D&M Holdings Inc. et al.*, Defendants' Reply in Support of Partial Motion for Judgment on the Pleadings, filed Jun. 10, 2016, 15 pages.
Sonos, Inc. v. *D&M Holdings Inc. et al.*, Defendants' First Amended Answer to Plaintiffs' Third Amended Complaint, filed Sep. 7, 2016, 23 pages.
Sonos, Inc. v. *D&M Holdings Inc. et al.*, Exhibit A: Defendants' Second Amended Answer to Plaintiffs' Third Amended Complaint, filed Sep. 9, 2016, 43 pages.
Sonos, Inc. v. *D&M Holdings Inc. et al.*, Joint Claim Construction Chart, vol. 1 of 3 with Exhibits A-O, filed Aug. 17, 2016, 30 pages.
Sonos, Inc. v. *D&M Holdings Inc. et al.*, Plaintiff Sonos, Inc.'s Opening Claim Construction Brief, filed Sep. 9, 2016, 26 pages.
Sonos, Inc. v. *D&M Holdings Inc. et al.*, Declaration of Steven C. Visser, executed Sep. 9, 2016, 40 pages.
Sonos, Inc. v. *D&M Holdings Inc. et al.*, Defendant's Initial Invalidity Contentions, filed Apr. 15, 2016, 97 pages.
Sonos, Inc. v. *D&M Holdings Inc. et al.*, Defendant's Preliminary Identification of Indefinite Terms, provided Jul. 29, 2016, 8 pages.
Sonos, Inc. v. *D&M Holdings Inc. et al.*, Defendant's Preliminary Identification of Prior Art References, provided Jul. 29, 2016, 5 pages.
Sonos, Inc. v. *D&M Holdings Inc. et al.*, Defendant's Amended Invalidity Contentions, filed Sep. 14, 2016, 100 pages.
WaveLan High-Speed Multimode Chip Set, AVAGO0003, Agere Systems, Feb. 2003, 4 pages.
WaveLan High-Speed Multimode Chip Set, AVAGO0005, Agere Systems, Feb. 2003, 4 pages.
Advanced Driver Tab User Interface WaveLan GUI Guide, AVAGO0009, Agere Systems, Feb. 2004, 4 pages.
Automatic Profile Hunting Functional Description, AVAGO0013, Agere Systems, Feb. 2004, 2 pages.
Agere Systems' Voice-over-Wireless LAN (VoWLAN) Station Quality of Service, AVAGO0015, Agere Systems, Jan. 2005, 5 pages.
Deep-Sleep Implementation in WL60011 for IEEE 802.11b Applications, AVAGO0020, Agere Systems, Jul. 2004, 22 pages.
Change Notification: Agere Systems WaveLan Multimode Reference Design (D2 to D3), AVAGO0042, Agere Systems, Nov. 2004, 2 pages.
WI-DK Release 2 WaveLan END Reference Driver for VxWorks, AVAGO0044, Agere Systems, Jul. 2003, 4 pages.
WI-DK Release 2 WaveLan LKM Reference Drivers for Linux, AVAGO0048, Agere Systems, Jul. 2003, 4 pages.
WaveLAN Wireless Integration-Developer Kit (WI-DK) Hardware Control Function (HCF), AVAGO0052, Agere Systems, Jul. 2003, 2 pages.
WaveLAN Wireless Integration Developer Kit (WI-DK) for Access Point Developers, AVAGO0054, Agere Systems, Jul. 2003, 2 pages.
WI-DK Release 2 WaveLan Embedded Drivers for VxWorks and Linux, AVAGO0056, Agere Systems, Jul. 2003, 2 pages.
Issues with Mixed IEEE 802.b/802.11g Networks, AVAGO0058, Agere Systems, Feb. 2004, 5 pages.
WPA Reauthentication Rates, AVAGO0063, Agere Systems, Feb. 2004, 3 pages.
Programming Interface for WL54040 Dual-Band Wireless Transceiver, AVAGO0066, Agere Systems, May 2004, 16 pages.
Integra Service Manual, Audio Network Receiver Model NAC-2.3, Dec. 2002, 44 pages.
Sony: AIR-SA 50R Wireless Speaker, Copyright 2009, 2 pages.
Sony: Altus Quick Setup Guide ALT-SA32PC, Copyright 2009, 2 pages.
Sony: BD/DVD Home Theatre System Operating Instructions for BDV-E300, E301 and E801, Copyright 2009, 115 pages.
Sony: BD/DVD Home Theatre System Operating Instructions for BDV-IT1000/BDV-IS1000, Copyright 2008, 159 pages.
Sony: Blu-ray Disc/DVD Home Theatre System Operating Instructions for BDV-IZ1000W, Copyright 2010, 88 pages.
Sony: DVD Home Theatre System Operating Instructions for DAV-DZ380W/DZ680W/DZ880W, Copyright 2009, 136 pages.
Sony: DVD Home Theatre System Operating Instructions for DAV-DZ870W, Copyright 2008, 128 pages.
Sony: Home Theatre System Operating Instructions for HT-IS100, Copyright 2008, 168 pages.
Sony: HT-IS100, 5.1 Channel Audio System, last updated Nov. 2009, 2 pages.
Sony: Multi Channel AV Receiver Operating Instructions for STR-DN1000, Copyright 2009, 136 pages.
Sony: STR-DN1000, Audio Video Receiver, last updated Aug. 2009, 2 pages.
Sony: Wireless Surround Kit Operating Instructions for WHAT-SA2, Copyright 2010, 56 pages.
Bogen Communications, Inc., ProMatrix Digitally Matrixed Amplifier Model PM3180, Copyright 1996, 2 pages.
LinkSys by Cisco, Wireless Home Audio Controller, Wireless-N Touchscreen Remote DMRW1000 Datasheet, Copyright 2008, 2 pages.
LinkSys by Cisco, Wireless Home Audio Controller, Wireless-N Touchscreen Remote DMRW1000 User Guide, Copyright 2008, 64 pages.
LinkSys by Cisco, Wireless Home Audio Player, Wireless-N Music Extender DMP100 User Guide, Copyright 2008, 65 pages.

(56) **References Cited**

OTHER PUBLICATIONS

LinkSys by Cisco, Wireless Home Audio Player, Wireless-N Music Extender DMP100 Quick Installation Guide, Copyright 2009, 32 pages.
Denon AV Surround Receiver AVR-5800 Operating Instructions, Copyright 2000, 67 pages.
IBM Home Director Installation and Service Manual, Copyright 1998, 124 pages.
IBM Home Director Owner's Manual, Copyright 1999, 67 pages.
Sony Ericsson MS500 User Guide, Copyright 2009, 2 pages.
TOA Corporation, Digital Processor DP-0206 DACsys2000 Version 2.00 Software Instruction Manual, Copyright 2001, 67 pages.
Fireball DVD and Music Manager DVDM-100 Installation and User's Guide, Copyright 2003, 185 pages.
Fireball MP-200 User's Manual, Copyright 2006, 93 pages.
Fireball SE-D1 User's Manual, Copyright 2005, 90 pages.
Fireball Remote Control Guide WD006-1-1, Copyright 2003, 19 pages.
Sony: Multi Channel AV Receiver Operating Instructions, 2007, 80 pages.
WI-DK Release 2 WaveLan END Reference Driver for VxWorks, AVAGO0044, Agere Systems, Jul. 2003, 2 pages.
Sonos, Inc. v. *D&M Holdings Inc. et al.*, Defendant's Initial Invalidity Contentions Exhibit 12: Defendants' Invalidity Contentions for U.S. Pat. No. D559,197 filed Apr. 15, 2016, 36 pages.
Advisory Action dated Jan. 10, 2018, issued in connection with U.S. Appl. No. 13/871,785, filed Apr. 26, 2013, 3 pages.
Final Office Action dated Mar. 1, 2018, issued in connection with U.S. Appl. No. 13/705,176, filed Dec. 5, 2012, 16 pages.
Final Office Action dated Feb. 15, 2018, issued in connection with U.S. Appl. No. 14/516,883, filed Oct. 17, 2014, 17 pages.
Final Office Action dated Mar. 16, 2018, issued in connection with U.S. Appl. No. 90/013,959, filed Jun. 16, 2017, 39 pages.
Non-Final Office Action dated Jan. 10, 2018, issued in connection with U.S. Appl. No. 13/848,932, filed Mar. 22, 2013, 18 pages.
Non-Final Office Action dated Dec. 14, 2017, issued in connection with U.S. Appl. No. 15/081,911, filed Mar. 27, 2016, 17 pages.
Non-Final Office Action dated Nov. 14, 2017, issued in connection with U.S. Appl. No. 13/864,252, filed Apr. 17, 2013, 11 pages.
Non-Final Office Action dated Nov. 15, 2017, issued in connection with U.S. Appl. No. 15/228,639, filed Aug. 4, 2016, 14 pages.
Non-Final Office Action dated Nov. 15, 2017, issued in connection with U.S. Appl. No. 15/243,186, filed Aug. 22, 2016, 13 pages.
Non-Final Office Action dated Nov. 28, 2017, issued in connection with U.S. Appl. No. 13/864,248, filed Apr. 17, 2013, 12 pages.
Non-Final Office Action dated Jan. 9, 2018, issued in connection with U.S. Appl. No. 13/864,250, filed Apr. 17, 2013, 13 pages.
Notice of Allowance dated Jan. 31, 2018, issued in connection with U.S. Appl. No. 13/871,785, filed Apr. 26, 2013, 6 pages.
Sonos, Inc. v. *D&M Holdings Inc. et al.*, Defendants' 35 U.S.C. § 282 Notice filed Nov. 2, 2017, 31 pages.
Advisory Action dated Jun. 11, 2018, issued in connection with U.S. Reexamination Control No. 90/013,959 for U.S. Pat. No. 9,213,357, filed Jun. 16, 2017, 3 pages.
Allen and Heath ML4000 User Guide, 2003, 56 pages.
Appeal Brief and Exhibits A-K filed on Sep. 17, 2018, in connection with Rexam U.S. Appl. No. 90/013,959, filed Jun. 16, 2017, 240 pages.
Canadian Patent Office, Office Action dated Jul. 10, 2018, issued in connection with Canadian Application No. 2982726, 3 pages.
European Patent Office, Summons to Attend Oral Proceedings mailed on Jul. 10, 2018, issued in connection with European Application No. 13184747.7, 10 pages.
Examiner's Answer to Appeal Brief mailed on Nov. 5, 2018, issued in connection with U.S. Reexamination Control No. 90/013,959 for U.S. Pat. No. 9,213,357, filed Jun. 16, 2017, 14 pages.
Final Office Action dated Jun. 6, 2018, issued in connection with U.S. Appl. No. 14/184,522, filed Feb. 19, 2014, 14 pages.
Final Office Action dated Jul. 11, 2018, issued in connection with U.S. Appl. No. 13/864,252, filed Apr. 17, 2013, 10 pages.
Final Office Action dated May 16, 2018, issued in connection with U.S. Appl. No. 14/184,528, filed Feb. 19, 2014, 11 pages.
Final Office Action dated Oct. 16, 2018, issued in connection with U.S. Appl. No. 15/243,355, filed Aug. 22, 2016, 15 pages.
Final Office Action dated Oct. 26, 2018, issued in connection with U.S. Appl. No. 15/095,145, filed Apr. 10, 2016, 14 pages.
Final Office Action dated Mar. 29, 2018, issued in connection with U.S. Appl. No. 14/504,812, filed Oct. 2, 2014, 24 pages.
Final Office Action dated Dec. 4, 2018, issued in connection with U.S. Appl. No. 16/009,182, filed Jun. 14, 2018, 24 pages.
Japanese Patent Office, Office Action dated May 15, 2018, issued in connection with Japanese Application No. 2016-163042, 6 pages.
Japanese Patent Office, Translation of Office Action dated May 15, 2018, issued in connection with Japanese Application No. 2016-163042, 4 pages.
Non-Final Office Action dated Apr. 2, 2018, issued in connection with U.S. Appl. No. 15/243,355, filed Aug. 22, 2016, 20 pages.
Non-Final Office Action dated Oct. 23, 2018, issued in connection with U.S. Appl. No. 14/808,875, filed Jul. 24, 2015, 16 pages.
Non-Final Office Action dated Apr. 24, 2018, issued in connection with U.S. Appl. No. 15/095,145, filed Apr. 10, 2016, 13 pages.
Non-Final Office Action dated Sep. 28, 2018, issued in connection with U.S. Appl. No. 15/972,383, filed May 7, 2018, 15 pages.
Non-Final Office Action dated Jul. 30, 2018, issued in connection with U.S. Appl. No. 16/009,182, filed Jun. 14, 2018, 22 pages.
Non-Final Office Action dated Oct. 30, 2018, issued in connection with U.S. Appl. No. 16/052,316, filed Aug. 1, 2018, 7 pages.
Notice of Allowance dated Jul. 6, 2018, issued in connection with U.S. Appl. No. 14/058,166, filed Oct. 18, 2013, 19 pages.
Notice of Allowance dated Oct. 1, 2018, issued in connection with U.S. Appl. No. 13/705,176, filed Dec. 5, 2012, 12 pages.
Notice of Allowance dated Aug. 10, 2018, issued in connection with U.S. Appl. No. 15/081,911, filed Mar. 27, 2016, 5 pages.
Notice of Allowance dated Jul. 10, 2018, issued in connection with U.S. Appl. No. 14/504,812, filed Oct. 2, 2014, 9 pages.
Notice of Allowance dated May 10, 2018, issued in connection with U.S. Appl. No. 13/864,248, filed Apr. 17, 2013, 8 pages.
Notice of Allowance dated Sep. 12, 2018, issued in connection with U.S. Appl. No. 13/864,250, filed Apr. 17, 2013, 8 pages.
Notice of Allowance dated Sep. 12, 2018, issued in connection with U.S. Appl. No. 15/228,639, filed Aug. 4, 2016, 8 pages.
Notice of Allowance dated Sep. 12, 2018, issued in connection with U.S. Appl. No. 15/243,186, filed Aug. 22, 2016, 8 pages.
Notice of Allowance dated Nov. 19, 2018, issued in connection with U.S. Appl. No. 14/184,528, filed Feb. 19, 2014, 19 pages.
Notice of Allowance dated Nov. 20, 2018, issued in connection with U.S. Appl. No. 16/119,352, filed Aug. 31, 2018, 9 pages.
Notice of Allowance dated Nov. 20, 2018, issued in connection with U.S. Appl. No. 16/119,638, filed Aug. 31, 2018, 9 pages.
Notice of Allowance dated Oct. 22, 2018, issued in connection with U.S. Appl. No. 14/058,166, filed Oct. 18, 2013, 7 pages.
Notice of Allowance dated Oct. 23, 2018, issued in connection with U.S. Appl. No. 14/516,883, filed Oct. 17, 2014, 10 pages.
Notice of Allowance dated Sep. 26, 2018, issued in connection with U.S. Appl. No. 13/848,932, filed Mar. 22, 2013, 10 pages.
Notice of Allowance dated Jun. 27, 2018, issued in connection with U.S. Appl. No. 13/848,921, filed Mar. 22, 2013, 19 pages.
Notice of Allowance dated Nov. 27, 2018, issued in connection with U.S. Appl. No. 16/052,316, filed Aug. 1, 2018, 8 pages.
Notice of Allowance dated Aug. 29, 2018, issued in connection with U.S. Appl. No. 14/504,812, filed Oct. 2, 2014, 8 pages.
Notice of Appeal and Certificate of Service filed on Jul. 16, 2018, in connection with Reexam U.S. Appl. No. 90/013,959, filed Jun. 16, 2017, 2 pages.
Pro Tools Reference Guide Version 5.3 Manual, 2002, 582 pages.
Solid State Logic G Series Master Studio System: SSL G Series Console, 1988, 113 pages.
Solid State Logic G Series Systems Operator's Shortform Guide: SSL G Series Console, 1994, 49 pages.
Solid State Logic SL 9000 J Series Total Studio System: Console Operator's Manual, 1994, 415 pages.
Advisory Action dated Mar. 22, 2019, issued in connection with U.S. Appl. No. 16/009,182, filed Jun. 14, 2018, 3 pages.

(56) **References Cited**

OTHER PUBLICATIONS

Japanese Patent Office, Office Action dated Feb. 5, 2019, issued in connection with Japanese Application No. 2016-163042, 6 pages.
Japanese Patent Office, Office Action Translation dated Feb. 5, 2019, issued in connection with Japanese Application No. 2016-163042, 4 pages.
Non-Final Office Action dated Jan. 7, 2019, issued in connection with U.S. Appl. No. 14/184,522, filed Feb. 19, 2014, 14 pages.
Notice of Allowance dated Feb. 11, 2019, issued in connection with U.S. Appl. No. 16/180,920, filed Nov. 5, 2018, 10 pages.
Notice of Allowance dated Feb. 11, 2019, issued in connection with U.S. Appl. No. 16/181,342, filed Nov. 6, 2018, 15 pages.
Notice of Allowance dated Mar. 11, 2019, issued in connection with U.S. Appl. No. 15/243,355, filed Aug. 22, 2016, 17 pages.
Notice of Allowance dated Mar. 14, 2019, issued in connection with U.S. Appl. No. 14/808,875, filed Jul. 24, 2015, 14 pages.
Notice of Allowance dated Dec. 17, 2018, issued in connection with U.S. Appl. No. 16/128,404, filed Sep. 11, 2018, 24 pages.
Notice of Allowance dated Mar. 25, 2019, issued in connection with U.S. Appl. No. 15/972,383, filed May 7, 2018, 9 pages.
Notice of Allowance dated Jan. 28, 2019, issued in connection with U.S. Appl. No. 16/181,270, filed Nov. 5, 2018, 10 pages.
Notice of Allowance dated Mar. 29, 2019, issued in connection with U.S. Appl. No. 15/095,145, filed Apr. 10, 2016, 7 pages.
Notice of Allowance dated Mar. 6, 2019, issued in connection with U.S. Appl. No. 16/181,327, filed Nov. 5, 2018, 16 pages.
Notice of Allowance dated Jan. 8, 2019, issued in connection with U.S. Appl. No. 13/864,252, filed Apr. 17, 2013, 10 pages.
Advisory Action dated Nov. 1, 2013, issued in connection with U.S. Appl. No. 13/618,829, filed Sep. 14, 2012, 3 pages.
Advisory Action dated Aug. 10, 2017, issued in connection with U.S. Appl. No. 13/864,250, filed Apr. 17, 2013, 3 pages.
Advisory Action dated Aug. 16, 2017, issued in connection with U.S. Appl. No. 13/864,248, filed Apr. 17, 2013, 5 pages.
Advisory Action dated Jun. 20, 2017, issued in connection with U.S. Appl. No. 15/243,355, filed Aug. 22, 2016, 5 pages.
Advisory Action dated Sep. 22, 2017, issued in connection with U.S. Appl. No. 15/243,186, filed Aug. 22, 2016, 3 pages.
Advisory Action dated Apr. 27, 2016, issued in connection with U.S. Appl. No. 14/486,667, filed Sep. 15, 2014, 7 pages.
Corrected Notice of Allowability dated Dec. 23, 2016, issued in connection with U.S. Appl. No. 14/803,953, filed Jul. 20, 2015, 18 pages.
European Patent Office, European Office Action dated Sep. 1, 2017, issued in connection with European Application No. 13184747.7, 7 pages.
File History of Re-Examination U.S. Appl. No. 90/013,423 (Sonos Ref. No. 12-0902-REX).
Final Office Action dated Jun. 2, 2017, issued in connection with U.S. Appl. No. 13/848,932, filed Mar. 22, 2013, 32 pages.
Final Office Action dated Jul. 5, 2013, issued in connection with U.S. Appl. No. 13/618,829, filed Sep. 14, 2012, 22 pages.
Final Office Action dated Mar. 8, 2017, issued in connection with U.S. Appl. No. 14/486,667, filed Sep. 15, 2014, 39 pages.
Final Office Action dated Nov. 8, 2017, issued in connection with U.S. Appl. No. 13/848,921, filed Mar. 22, 2013, 13 pages.
Final Office Action dated Nov. 8, 2017, issued in connection with U.S. Appl. No. 13/871,785, filed Apr. 26, 2013, 12 pages.
Final Office Action dated Apr. 10, 2017, issued in connection with U.S. Appl. No. 15/243,355, filed Aug. 22, 2016, 15 pages.
Final Office Action dated Jul. 11, 2017, issued in connection with U.S. Appl. No. 15/243,186, filed Aug. 22, 2016, 13 pages.
Final Office Action dated Aug. 14, 2009, issued in connection with U.S. Appl. No. 11/147,116, filed Jun. 6, 2005, 28 pages.
Final Office Action dated Jun. 15, 2017, issued in connection with U.S. Appl. No. 15/228,639, filed Aug. 4, 2016, 16 pages.
Final Office Action dated May 15, 2017, issued in connection with U.S. Appl. No. 13/864,252, filed Apr. 17, 2013, 13 pages.
Final Office Action dated Mar. 16, 2011, issued in connection with U.S. Appl. No. 11/147,116, filed Jun. 6, 2005, 40 pages.
Final Office Action dated May 16, 2017, issued in connection with U.S. Appl. No. 13/864,250, filed Apr. 17, 2013, 12 pages.
Final Office Action dated Apr. 20, 2017, issued in connection with U.S. Appl. No. 13/864,248, filed Apr. 17, 2013, 14 pages.
Final Office Action dated Dec. 24, 2009, issued in connection with U.S. Appl. No. 11/147,116, filed Jun. 6, 2005, 29 pages.
Final Office Action dated Jun. 28, 2017, issued in connection with U.S. Appl. No. 14/808,875, filed Jul. 24, 2015, 14 pages.
Final Office Action dated Dec. 31, 2015, issued in connection with U.S. Appl. No. 14/486,667, filed Sep. 15, 2014, 34 pages.
First Action Pre-Interview Office Action dated Jun. 22, 2017, issued in connection with U.S. Appl. No. 14/516,883, filed Oct. 17, 2014, 5 pages.
First Office Action Interview dated Aug. 30, 2017, issued in connection with U.S. Appl. No. 14/516,883, filed Oct. 17, 2014, 5 pages.
Fries et al. "The MP3 and Internet Audio Handbook: Your Guide to the Digital Music Revolution." 2000, 320 pages.
Japanese Patent Office, Japanese Office Action dated Oct. 3, 2017, issued in connection with Japanese Application No. 2016-163042, 5 pages.
"Microsoft Windows XP File and Printer Share with Microsoft Windows" Microsoft Windows XP Technical Article, 2003, 65 pages.
"SMPTE Made Simple: A Time Code Tutor by Timeline," 1996, 46 pages.
Niederst, Jennifer "O'Reilly Web Design in a Nutshell," Second Edition, Sep. 2001, 678 pages.
Non-Final Office Action dated Sep. 1, 2010, issued in connection with U.S. Appl. No. 11/147,116, filed Jun. 6, 2005, 36 pages.
Non-Final Office Action dated Nov. 2, 2016, issued in connection with U.S. Appl. No. 14/486,667, filed Sep. 15, 2014, 37 pages.
Non-Final Office Action dated Feb. 3, 2009, issued in connection with U.S. Appl. No. 11/147,116, filed Jun. 6, 2005, 32 pages.
Non-Final Office Action dated Oct. 3, 2014, issued in connection with U.S. Appl. No. 13/863,083, filed Apr. 15, 2013, 22 pages.
Non-Final Office Action dated Nov. 7, 2011, issued in connection with U.S. Appl. No. 11/147,116, filed Jun. 6, 2005, 48 pages.
Non-Final Office Action dated Apr. 10, 2017, issued in connection with U.S. Appl. No. 13/871,785, filed Apr. 26, 2013, 10 pages.
Non-Final Office Action dated Jul. 11, 2017, issued in connection with U.S. Appl. No. 13/848,921, filed Mar. 22, 2013, 10 pages.
Non-Final Office Action dated Aug. 15, 2017, issued in connection with U.S. Appl. No. 14/184,522, filed Feb. 19, 2014, 11 pages.
Non-Final Office Action dated Jul. 15, 2016, issued in connection with U.S. Appl. No. 14/803,953, filed Jul. 20, 2015, 20 pages.
Non-Final Office Action dated Aug. 17, 2017, issued in connection with U.S. Appl. No. 14/184,528, filed Feb. 19, 2014, 12 pages.
Non-Final Office Action dated Jan. 18, 2013, issued in connection with U.S. Appl. No. 13/618,829, filed Sep. 14, 2012, 58 pages.
Non-Final Office Action dated Apr. 20, 2017, issued in connection with U.S. Appl. No. 90/013,882, filed Dec. 27, 2016, 197 pages.
Non-Final Office Action dated Oct. 20, 2017, issued in connection with U.S. Appl. No. 90/013,959, filed Jun. 16, 2017, 50 pages.
Non-Final Office Action dated Oct. 23, 2014, issued in connection with U.S. Appl. No. 13/932,864, filed Jul. 1, 2013, 20 pages.
Non-Final Office Action dated Jul. 26, 2017, issued in connection with U.S. Appl. No. 13/705,176, filed Dec. 5, 2012, 14 pages.
Non-Final Office Action dated Aug. 28, 2017, issued in connection with U.S. Appl. No. 14/504,812, filed Oct. 2, 2014, 17 pages.
Non-Final Office Action dated Aug. 29, 2017, issued in connection with U.S. Appl. No. 14/058,166, filed Oct. 18, 2013, 12 pages.
Non-Final Office Action dated Dec. 31, 2013, issued in connection with U.S. Appl. No. 13/618,829, filed Sep. 14, 2012, 26 pages.
Notice of Allowance dated Jun. 1, 2017, issued in connection with U.S. Appl. No. 14/290,493, filed May 29, 2014, 12 pages.
Notice of Allowance dated Jun. 2, 2017, issued in connection with U.S. Appl. No. 14/486,667, filed Sep. 15, 2014, 10 pages.
Notice of Allowance dated Jul. 12, 2017, issued in connection with U.S. Appl. No. 13/894,179, filed May 14, 2013, 10 pages.
Notice of Allowance dated Jul. 13, 2017, issued in connection with U.S. Appl. No. 13/895,076, filed May 15, 2013, 10 pages.

(56) **References Cited**

OTHER PUBLICATIONS

Notice of Allowance dated Aug. 14, 2012, issued in connection withU.S. Appl. No. 11/147,116, filed Jun. 6, 2005, 33 pages.
Notice of Allowance dated Jul. 18, 2014, issued in connection with U.S. Appl. No. 13/618,829, filed Sep. 14, 2012, 8 pages.
Notice of Allowance dated Nov. 23, 2016, issued in connection with U.S. Appl. No. 14/803,953, filed Jul. 20, 2015, 21 pages.
Notice of Allowance dated Apr. 25, 2017, issued in connection with U.S. Appl. No. 15/156,392, filed May 17, 2016, 8 pages.
Notice of Allowance dated Apr. 27, 2015, issued in connection with U.S. Appl. No. 13/932,864, filed Jul. 1, 2013, 20 pages.
Notice of Allowance dated Mar. 27, 2017, issued in connection with U.S. Appl. No. 15/089,758, filed Apr. 4, 2016, 7 pages.
Notice of Allowance dated Mar. 28, 2017, issued in connection with U.S. Appl. No. 15/088,906, filed Apr. 1, 2016, 7 pages.
Notice of Allowance dated Mar. 28, 2017, issued in connection with U.S. Appl. No. 15/155,149, filed May 16, 2016, 7 pages.
Notice of Allowance dated Apr. 29, 2015, issued in connection with U.S. Appl. No. 13/863,083, filed Apr. 15, 2013, 19 pages.
Notice of Allowance dated Mar. 29, 2017, issued in connection with U.S. Appl. No. 14/803,953, filed Jul. 20, 2015, 8 pages.
Notice of Allowance dated Apr. 3, 2017, issued in connection with U.S. Appl. No. 15/088,678, filed Apr. 1, 2016, 8 pages.
Notice of Allowance dated Mar. 30, 2017, issued in connection with U.S. Appl. No. 15/088,532, filed Apr. 1, 2016, 7 pages.
Notice of Allowance dated Apr. 6, 2017, issued in connection with U.S. Appl. No. 15/088,283, filed Apr. 1, 2016, 7 pages.
Notice of Incomplete Re-Exam Request dated May 25, 2017, issued in connection with U.S. Appl. No. 90/013,959, filed Apr. 1, 2016, 10 pages.
Notice of Intent to Issue Re-Examination Certificate dated Aug. 3, 2017, issued in connection with U.S. Appl. No. 90/013,882, filed Dec. 27, 2016, 20 pages.
"Sonos Multi-Room Music System User Guide," Version 090401, Sonos, Inc. Apr. 1, 2009, 256 pages.
Pre-Brief Conference Decision dated May 11, 2017, issued in connection with U.S. Appl. No. 14/504,812, filed Oct. 2, 2014, 2 pages.
Reexam Non-Final Office Action dated Nov. 9, 2016, issued in connection with U.S. Appl. No. 90/013,774, filed Jun. 29, 2016, 35 pages.
Renewed Request for Ex Parte Re-Examination, U.S. Appl. No. 90/013,959, filed Jun. 16, 2017, 126 pages.
Request for Ex Parte Reexamination submitted in U.S. Pat. No. 9,213,357 on May 22, 2017, 85 pages.
Sonos System Overview, Version 1.0, Jul. 2011, 12 pages.
"Symantec pcAnywhere User's Guide," v 10.5.1, 1995-2002, 154 pages.
Canadian Patent Office, Canadian Office Action dated Jun. 11, 2019, issued in connection with Canadian Application No. 2982726, 4 pages.
Non-Final Office Action dated Jul. 22, 2019, issued in connection with U.S. Appl. No. 16/009,182, filed Jun. 14, 2018, 23 pages.
Notice of Allowance dated Sep. 18, 2019, issued in connection with U.S. Appl. No. 16/459,569, filed Jul. 1, 2019 10 pages.
Notice of Allowance dated May 21, 2019, issued in connection with U.S. Appl. No. 14/184,522, filed Feb. 19, 2014, 9 pages.
Notice of Allowance dated Jul. 26, 2019, issued in connection with U.S. Appl. No. 14/184,528, filed Feb. 19, 2014, 7 pages.
Patent Board Decision dated May 31, 2019, issued in connection with U.S. Appl. No. 90/013,959, filed Jun. 16, 2017, 9 pages.
Pro Tools Reference Guide Version 6.1 , 2003, 643 pages.
Canadian Patent Office, Canadian Office Action dated Mar. 3, 2020, issued in connection with Canadian Application No. 3033268, 4 pages.
European Patent Office, European Extended Search Report dated Mar. 31, 2020, issued in connection with European Application No. 19194999.9, 15 pages.
European Patent Office, European Search Report dated Jan. 27, 2020, issued in connection with European Application No. 19194999.9, 16 pages.
Non-Final Office Action dated Nov. 13, 2019, issued in connection with U.S. Appl. No. 15/946,660, filed Apr. 5, 2018, 6 pages.
Non-Final Office Action dated Apr. 30, 2020, issued in connection with U.S. Appl. No. 16/459,605, filed Jul. 1, 2019, 25 pages.
Notice of Allowance dated Dec. 2, 2019, issued in connection with U.S. Appl. No. 16/514,280, filed Jul. 17, 2019, 8 pages.
Notice of Allowance dated Dec. 6, 2019, issued in connection with U.S. Appl. No. 16/459,565, filed Jul. 1, 2019, 8 pages.
Notice of Allowance dated Nov. 15, 2019, issued in connection with U.S. Appl. No. 16/544,902, filed Aug. 20, 2019, 9 pages.
Notice of Allowance dated Dec. 26, 2019, issued in connection with U.S. Appl. No. 16/544,900, filed Aug. 20, 2019, 20 pages.
Notice of Allowance dated Nov. 27, 2019, issued in connection with U.S. Appl. No. 14/184,528, filed Feb. 19, 2014, 8 pages.
Notice of Allowance dated Apr. 28, 2020, issued in connection with U.S. Appl. No. 16/459,569, filed Jul. 1, 2019, 8 pages.
Notice of Allowance dated Nov. 29, 2019, issued in connection with U.S. Appl. No. 16/459,569, filed Jul. 1, 2019, 8 pages.
Sonos, Inc. v. *Google LLC*, Appendix A to Respondents' Response to the Complaint and Notice of Investigation, filed Feb. 27, 2020, 2 pages.
Sonos, Inc. v. *Google LLC*, Appendix B to Respondents' Response to the Complaint and Notice of Investigation, filed Feb. 27, 2020, 176 pages.
Sonos, Inc. v. *Google LLC*, Respondents' Response to the Complaint and Notice of Investigation, filed Feb. 27, 2020, 46 pages.
Squeezebox by Logitech. Owner's Guide, 2007, 32 pages.
Squeezebox Network Music Player. Owner's Manual, Slim Devices, 2003, 22 pages.
Amazon: Philips MCW770 WiFi Wireless PC Link AM/FM 5-CD Microsystem (Discontinued by Manufacturer): Home Audio & Theater, 5 pages [online]. [retrieved on Feb. 24, 2020]. Retrieved from the Internet URL: https://www.amazon.com/gp/product/B000278KLC.
Ashcraft et al. P4 Protocol Specification vo.2. Apr. 6, 2002, 11 pages [online]. [retrieved on Mar. 26, 2020]. Retrieved from the Internet URL: https://snarfed.org/p4protocol.
AudioPoint from Home Director. Play Digital Music on Your Conventional Stereo System, 2002, 2 pages.
AudioPoint, Welcome to the coolest way to listen to digital music over your conventional stereo equipment, Home Director HD00B02, 2002, 2 pages.
Barix Download Exstreamer Software. Accessed via WayBack Machine, Apr. 6, 2003. http://www.barix.com/estreamer/software.download.html. 2 pages.
Barix. Exstreamer Datasheet. Accessed via WayBack Machine, Apr. 2, 2003. http://www.barix.com/exstreamer/, 1 page.
Barret, Ryan. P4 Proposal :CS194 Project Proposal. Toward an Application-Independent Distributed Network Platform. Apr. 9, 2002, 4 pages [online]. [retrieved on Mar. 26, 2020]. Retrieved from the Internet URL: https://snarfed.org/p4proposal.
Barrett, Ryan. (no title) Blog on P4Sync network and code, 1 page [online], [retrieved on Mar. 26, 2020]. Retrieved from the Internet URL: https://snarfed.org.p4.
Bose. The Bose Lifestyle 50 System. Owner's Guide, Oct. 17, 2001, 55 pages.
C-Media Electronics Inc. CMI8768/8768+ Advanced Driver Software Architecture. User Manual, Revision: 1.0, May 25, 2004, 29 pages.
C-Media XeaR 3D Sound Solution. CMI8738 4/6-Channel PCI Audio Single Chip. User Manual, Rev. 2.1, May 21, 2002, 44 pages.
Connected Planet. Using PC Link. Streamium PC Link by Philips. Models MC-i200/250, SL300i, SL400i, MX6000i, last modified Aug. 5, 2004, 2 pages.
Creating the Future of Home Entertainment Today. NetStreams Product Catalog 2003/2004, 20 pages.
Crest Audio Pro Series 8001 Power Amplifier. V. 2.2 Mar. 25, 1997, 2 pages.

(56) **References Cited**

OTHER PUBLICATIONS

Davies, Chris. Sony Ericsson MS500 Bluetooth Splashproof Speaker. http://www.slashgear.com/sony-ericsson-ms500-bluetooth-splashproof. Mar. 17, 2009, 2 pages.
Denon AVR-3805 A/V Surround Receiver. Datasheet, last modified Mar. 1, 2004, 2 pages.
Digigram. EtherSound ES8in/8out Ethernet Audio Bridges. Easy and Cost-Effective Audio Distribution, Nov. 2002, 4 pages.
DP-0206 TOA Digital Signal Processor. TOA Corporation, 2001, 4 pages.
Exstreamer. Network MP3 player for digital audio streaming in a consumer, home installation and commmercial applications. Barix Think Further. Sep. 2002, 2 pages.
Exstreamer. The Exstreamer Instruction Manual. Barix Think Further. Version 1.5 , Oct. 2002, 21 pages.
Exstreamer. The Exstreamer Technical Description: Version 1.5. Barix Think Further. Oct. 2002, 36 pages.
Final Office Action dated Jul. 11, 2018, issued in connection with U.S. Appl. No. 13/864,249, filed Apr. 17, 2013, 13 pages.
FireBall Digital Music Manager E-40 and E-120. Meet FireBall. The Industry's choice for managing your entire music collection. Datasheet. 2003, 2 pages.
Fireball E2 User's Manual. Escient. Gracenote cddb. 2000-2004, 106 pages.
Getting to know Logitech Squeezebox Touch Wi-Fi Music Player. Features Guide, 2010, 36 pages.
Google's Answer to Complaint and Counterclaims filed with United States District Court Central District of California, Western Division on Mar. 2, 2020, 50 pages.
Google's Counterclaims to Sonos's Complaint filed with United States District Court Central District of California, Western Division on Mar. 11, 2020, 13 pages.
HK Deskjet 5850 User Guide, copyright 2003, 217 pages.
LA Audio ZX135E 6 Zone Expander. Pro Audio Design Pro. Inc. https://www.proaudiodesign.com/products/la-audio-zx135e-6-zone-expander, accessed Mar. 26, 2020, 6 pages.
Microsoft Windows XP Student Edition Complete. University of Salford. Custom Guide Learn on Demand, 2004, 369 pages.
Model MRC88 Eight Zone—Eight Source Audio/Video Controller/ Amplifier System, Xantech Corporation, 2003, 102 pages.
Multi-Zone Control Systems. ZR-8630AV MultiZone Receiver. Niles. http://www.ampersandcom.com/zr8630ay.html accessed Mar. 26, 2020, 5 pages.
Musica 5000 Series. Multi-Room Audio System, NetStreams, 2005, 7 pages.
Musica MUR2E Network Interface. NetStreams Creating the future of home entertainment—today, 2004, 2 pages.
Musica MUR2EM Network Interface. NetStreams the IP Based Distributed Entertainment Company, 2005, 2 pages.
NetStreams Musica MU5066. Multi-Room Audio System. Installation and User's Guide, 2005, 44 pages.
NetStreams Musica. NS-MU4602 Audio Distribution System, Integration & Design Guide. The IP-Based Audio Distribution Company, 2004, 22 pages.
Notice of Allowance dated May 13, 2020, issued in connection with U.S. Appl. No. 16/459,565, filed Jul. 1, 2019, 8 pages.
Notice of Allowance dated May 13, 2020, issued in connection with U.S. Appl. No. 16/544,900, filed Aug. 20, 2019, 8 pages.
P4 0.3.1 software/source code available via link ("Download P4 0.3.1.") 1 page [online]. [retrieved on Mar. 26, 2020]. Retrieved from the Internet URL: http://snarfed.org/p4.
p4sync/player.cpp. GitHub. Copyright 2005, 4 pages [online], [retrieved on Mar. 26, 2020]. Retrieved from the Internet URL: http://github.com/snarfed/p4sync/blob/master/player.cpp.
Parrot DS1120 User Guide, English. Retrieved on Mar. 26, 2020, 11 pages.
Parrot DS1120 User Manual, 2007, 22 pages.
Philips. Installation CD Content, software/ source code available via zip file ("Installation CD Content") published Sep. 15, 2004, 3 pages [online], [retrieved on Feb. 24, 2020]. Retrieved from the Internet URL : https://www.usa.philips.com/c-p/MCW770_37/4support.
Philips Leads Consumer Electronics Industry with 21 CES Innovation Awards. Business Wire. 2004 International CES, Jan. 6, 2004, 3 pages.
Philips. MC W7708. Wireless PC Link Quick Installation. Published Dec. 22, 2004, 8 pages.
Philips. MCW770 Leaflet. Remote Control MP3 Music from Your PC . . . Wirelessly. MP3 Micro Hi-Fi System with 5 CD Tray Changer. Published Mar. 2, 2004, 2 pages.
Philips. MCW770 Quick Use Guide. English version. Published Dec. 22, 2004, 4 pages.
Philips Media Manager 3.3.12.0004 Release Notes, last modified Aug. 29, 2006, 2 pages.
Philips. Media Manager Software—English version: PMM 3.3.12, software/ source code available via zip file ("Media Manager Software—English") published Sep. 15, 2004, 3 pages [online], [Retrieved on Feb. 24, 2020]. Retrieved from the Internet URL : https://www.usa.philips.com/c-p/MCW770_37/4support.
Philips. Pc Software version: V.12.1, software/ source code available via zip file ("PC Software") published Sep. 15, 2004, 3 pages [online], [retrieved on Feb. 24, 2020]. Retrieved from the Internet URL : https://www.usa.philips.com/c-p/MCW770_37/4support.
Philips.Wireless PC Link Micro MCW770 Custom Installation, User Manual, published Aug. 24, 2004, 61 pages.
Rockeffish Wireless Outdoor Speaker RF-RBWS02 User Guide, 2009, 33 pages.
snarfed/p4sync. GitHub: A library and plugins for a few music players that (attempts to) synchronize playback across multiple computers, 2 pages [online]. [retrieved on Mar. 26, 2020]. Retrieved online URL: https://github.com/snarfed/ p4sync.
Software & drivers. Micro Audio System MCW770/37. Philips. Copyright 2004-2020, 3 pages [online]. [retrieved on Feb. 24, 2020]. Retrieved from the Internet URL: https://www_usa_philips_com/c-p/MCW770-37/-/support.
Sonos v. *Google*. Exhibit A to Respondents' Initial Invalidity Contentions dated Apr. 29, 2020, 194 pages.
Sonos v. *Google*. Respondents' Initial Invalidity Claim Charts for U.S. Pat. No. 10,439,896, Exhibits 1-16 and B, dated Apr. 29, 2020, 1102 pages.
Sonos v. *Google*. Respondents' Initial Invalidity Claim Charts for U.S. Pat. No. 10,209,953, Exhibits 1-10 and B, dated Apr. 29, 2020, 288 pages.
Sonos v. *Google*. Respondents' Initial Invalidity Claim Charts for U.S. Pat. No. 8,588,949, Exhibits 1-19 and B, dated 29 Apr. 2020, 280 pages.
Sonos v. Google. Respondents' Initial Invalidity Claim Charts for U.S. Pat. No. 9,195,258, Exhibits 1 - 10 and B, dated 29 Apr. 2020, 345 pages_ _.
Sonos v. *Google*. Respondents' Initial Invalidity Claim Charts for U.S. Pat. No. 9,219,959, Exhibits 1-9 and B, dated Apr. 29, 2020, 344 pages.
Sonos v. *Google*. Respondents' Initial Invalidity Contentions dated Apr. 29, 2020, 200 pages.
Squeezebox Duet Network Music System by Logitech. User Guide English (North America), 2008, 45 pages.
Step-by-step P4 Connection. P4 Poster (without music), 5 pages [online], [retrieved on Mar. 26, 2020]. Retrieved from the Internet URL: https://snarfed.org/p4_poster/index_html.
Structured Media Components. Leviton Integrated Networks, last modified Apr. 10, 2006, 28 pages.
Support. Manuals & Documentation. Micro Audio System MCW770/37. Philips. Copyright 2004-2020, 3 pages. [online], [retrieved on Feb. 24, 2020]. Retrieved from the Internet URL: https://www.usa.philips.con/c-p/MCW770_37/4 support.
Synchronizing mp3 playback. 3 pages [online]. [retrieved on Mar. 26, 2020]. Retrieved from the Internet URL: https://snarfed.org/synchronizing_mp3_playback.
Teirikangas, Jussi. HAVi: Home Audio Video Interoperability. Helsinki University of Technology, 2001, 10 pages.
TOA Electronics, Inc. Dp-0206 Digital Signal Processor. DACsys 2000, 2001, 12 pages.

(56) **References Cited**

OTHER PUBLICATIONS

UPnP AV Architecture:0.83 for UPnP Version 1.0, Jun. 12, 2002, copyright 2000, 22 pages.
UPnP Forum. UPnP Device Architecture 1.0. Oct. 15, 2008, 80 pages.
Weverka et al. Windows XP Gigabook for Dummies. Wiley Publishing, Inc. 2004, 915 pages.
Wireless Home Audio Director. Wireless N Music Player with Integrated Amplifier DMC250. Datasheet. Linksys by Cisco. Fill Your Home with Music, 2008, 2 pages.
Yahoo Groups. Exstreamer. Barix Exstreamer. Access via Wayback Machine http://groups.yahoo.com/group/exstreamer/ Dec. 22, 2013, 1 page.
Yamaha DME Designer 3.0 Owner's Manual; Copyright 2008, 501 pages.
Non-Final Office Action dated Oct. 1, 2019, issued in connection with U.S. Appl. No. 16/516,567, filed Jul. 19, 2019, 11 pages.
Notice of Allowance dated Oct. 1, 2019, issued in connection with U.S. Appl. No. 16/544,902, filed Aug. 20, 2019, 23 pages.
Notice of Allowance dated Sep. 25, 2019, issued in connection with U.S. Appl. No. 16/459,565, filed Jul. 1, 2019, 14 pages.
Notice of Allowance dated Sep. 26, 2019, issued in connection with U.S. Appl. No. 16/514,280, filed Jul. 17, 2019, 16 pages.
Sonos, Inc. v. *Implicit, LLC*: Declaration of Roman Chertov in Support of the Inter Partes Review of U.S. Pat. No. 7,391,791 dated Mar. 9, 2018, 92 pages.
Sonos, Inc. v. *Implicit, LLC*: Declaration of Roman Chertov in Support of the Inter Partes Review of U.S. Pat. No. 8,942,252 dated Mar. 9, 2018, 81 pages.
Sonos, Inc. v. *Lenbrook Industries Limited et al.*, Defendants' Answer to Plaintiffs Complaint—Exhibit A, filed Oct. 14, 2019, 3 pages.
Sonos, Inc. v. *Lenbrook Industries Limited et al.*, Defendants' Answer to Plaintiffs Complaint—Exhibit C, filed Oct. 14, 2019, 16 pages.
Sonos, Inc. v. *Lenbrook Industries Limited et al.*, Defendants' Answer to Plaintiffs Complaint—Exhibit D, filed Oct. 14, 2019, 36 pages.
Sonos, Inc. v. *Lenbrook Industries Limited et al.*, Defendants' Answer to Plaintiffs Complaint—Exhibit E, filed Oct. 14, 2019, 21 pages.
Sonos, Inc. v. *Lenbrook Industries Limited et al.*, Defendants' Answer to Plaintiffs Complaint, filed Oct. 14, 2019, 66 pages.
Sonos, Inc. v. *Lenbrook Industries Limited et al.*, Defendants' First Amended Answer and Counterclaims to Plaintiffs complaint, filed Nov. 14, 2019, 66 pages.
Anonymous, "Transmission Control Protocol," RFC: 793, USC/Information Sciences Institute, Sep. 1981, 91 pages.
Acoustic Research. 900MHz Wireless Stereo Speakers Model AW871 Installation and Operation Manual, 2003, 15 pages.
Acoustic Research. 900MHz Wireless Stereo Speakers Model AW871 Installation and Operation Manual, 2007, 12 pages.
Acoustic Research. Wireless Stereo Speakers with Auto-Tuning. Model AW877 Installation and Operation Manual, 2007, 13 pages.
Amazon.com: CD30 c300 Wireless Network MP3 Player (Analog/Digital): Home Audio & Theater, 5 pages [produced by Google in Inv. No. 337-TA-1191 on May 6, 2020].
Amazon.com, Cisco-Linksys Wireless-B Music System WMLS11B, 5 pages [produced by Google in Inv. No. 337-TA-1191 on May 6, 2020].
Amazon.com. Creative Labs Sound Blaster Wireless Music: Electronics, 7 pages, [produced by Google in Inv. No. 337-TA-1191 on May 6, 2020].
Apple. Airport Express, Setup Guide. May 20, 2004, 51 pages.
Apple. Airport Express, Setup Guide. 2004, 48 pages.
Apple Developer Connection. Browsing for Network Services. Nov. 12, 2002, 5 pages.
Apple. NewsRoom, Apple "Open Sources" Rendezvous. Sep. 25, 2002, 2 pages.
Apple. NewsRoom, Apple Ships New AirPort Express with AirTunes. Jul. 14, 2004, 3 pages.
Apple. NewsRoom, Apple Unveils AirPort Express for Mac & PC Users. Jun. 7, 2004, 3 pages.
Apple. NewsRoom, Developers Rapidly Adopt Apple's Rendezvous Networking Technology, Sep. 10, 2002, 3 pages.
Apple WWDC 2003 Session 105—Rendezvous—YouTube available via https://www.youtube.com/watch? v=Ge5bsDijGWM [produced by Google in Inv. No. 337-TA-1191 on May 6, 2020].
Audio Authority. Access EZ: Demonstration Network. Home Audio and Video System Installation Manual, 60 pages [produced by Google in Inv. No. 337-TA-1191 on May 6, 2020].
Beatty et al. Web Services Dynamic Discovery WS-Discovery, Feb. 2004, 35 pages.
Blau, John. News Analysis, Wi-Fi Hotspot Networks Sprout Like Mushrooms, Sep. 2002, 3 pages.
Bluetooth Specification. Advanced Audio Distribution Profile (A2DP) Specification, 2007, 73 pages.
BoomBottle MM Blue Hatch 2-Pack. Blue Hatch Waterproof Dual Pairing Wireless Speakers each with Built-in-MagicMount, 4 pages [produced by Google in Inv. No. 337-TA-1191 on May 6, 2020].
Bootcamp. Digital Music on Your Stereo System. Jan. 10, 2003, 1 page.
Bose Lifestyle SA-2 and SA-3 Stereo Amplifier Owner's Guide, 2004, 32 pages.
Bose. The Bose Lifestyle Powered Speaker System. Owner's Guide. Dec. 20, 2001, 19 pages.
BridgeCo—Wireless Loudspeaker Product Information Version 1.4, Dec. 16, 2003, 5 pages.
BridgeCo. BridgeCo Launches UPnP-Compliant Wireless Audio Adapter: Moving More Digital Audio to More Devices in More Locations, Wirelessly. Sep. 16, 2003, 1 page.
BridgeCo. Company Overview. 1 page [produced by Google in Inv. No. 337-TA-1191 on May 6, 2020].
BridgeCo. Networked Loudspeaker Product Information, 4 pages [produced by Google in Inv. No. 337-TA-1191 on May 6, 2020].
BridgeCo. Professional Loudspeaker—Product Information, 3 pages [produced by Google in Inv. No. 337-TA-1191 on May 6, 2020].
BridgeCo. User Manual, Wireless Audio Adapter. Sep. 22, 2003, 34 pages.
BridgeCo. Vision. 1 page [produced by Google in Inv. No. 337-TA-1191 on May 6, 2020].
BridgeCo. Vision, 5 Factors, 5 Missing Functionalities. 1 page [produced by Google in Inv. No. 337-TA-1191 on May 6, 2020].
BridgeCo. Vision, 5 Key Functions. 1 pages [produced by Google in Inv. No. 337-TA-1191 on May 6, 2020].
BridgeCo. Vision, BridgeCo Solution. 1 pages [produced by Google in Inv. No. 337-TA-1191 on May 6, 2020].
BridgeCo. Vision, Consumer Benefits. 1 page [produced by Google in Inv. No. 337-TA-1191 on May 6, 2020].
BridgeCo. Vision, Consumer Demand. 1 page [produced by Google in Inv. No. 337-TA-1191 on May 6, 2020].
BridgeCo. Vision, ENA Applications. 1 page [produced by Google in Inv. No. 337-TA-1191 on May 6, 2020].
BridgeCo. Vision, Eena Deployment. 1 page [produced by Google in Inv. No. 337-TA-1191 on May 6, 2020].
BridgeCo. Vision, ENA Functionality. 1 pages [produced by Google in Inv. No. 337-TA-1191 on May 6, 2020].
BridgeCo. Vision, ENA Market. 1 page [produced by Google in Inv. No. 337-TA-1191 on May 6, 2020].
BridgeCo. Vision, Entertainment Continuum. 1 page [produced by Google in Inv. No. 337-TA-1191 on May 6, 2020].
BridgeCo. Vision, Entertainment Network Adapter. 1 page [produced by Google in Inv. No. 337-TA-1191 on May 6, 2020].
BridgeCo. Vision, New Entertainment. 1 page [produced by Google in Inv. No. 337-TA-1191 on May 6, 2020].
BridgeCo. Vision, Technical Problems. 1 page [produced by Google in Inv. No. 337-TA-1191 on May 6, 2020].
BridgeCo. Wireless Audio Adapter, Product Information. 3 pages [produced by Google in Inv. No. 337-TA-1191 on May 5, 2020].
BridgeCo. Wireless Audio Adapter Reference Design, Product Information. Version 1.3. 31 Oct. 2003, 2 pages.

(56) **References Cited**

OTHER PUBLICATIONS

BridgeCo. Wireless Loudspeaker, Product Information. 4 pages [produced by Google in Inv. No. 337-TA-1191 on May 5, 2020].
Buffalo. Link Theater LT-H90 Media Player v1.0, 2003-2008, 38 pages.
Buffalo. LinkTheater PC-P3LWG/DVD, 59 pages [produced by Google in Inv. No. 337-TA-1191 on May 6, 2020].
Business Wire. BridgeCo Adds Wireless Connectivity and Enhances Surround Sound Processing for New Generation Speakers. May 5, 2003, 2 pages.
c200 Wireless Network MP3 Player, Jun. 4, 2003, 1 page.
Creative Sound Blaster Wireless Music, User's Guide, Version 1.0, Aug. 2003, 61 pages.
Creston's Adagio Entertainment System with New AMS Processor Wins Awards at CEDIA, Sep. 29, 2006, 3 pages.
Crestron Adagio AMS Media System Operations Guide, 2008, 114 pages.
Crestron. Adagio. Home Entertainment is Just the Beginning . . . 2007, 10 pages.
Crestron. Avs Forum. Dec. 1, 2007, 9 pages.
Crestron, Industry Awards, Crestron's Spirit of Innovation has Resulted in the Most Award-Winning Products in the Industry, 2006, 6 pages
Crestron, Industry Awards, Crestron's Spirit of Innovation has Resulted in the Most Award-Winning Products in the Industry, 2007, 5 pages.
Crome, Caleb. Logitech Squeezebox Boom Audio Design, 2008, 11 pages.
Dierks et al. RFC 2246 the TLS Protocol, Jan. 1999, 80 pages.
D-Link. User's Manual, Wireless HD Media Player, Version 1.1, DSM-520, Sep. 28, 2005, 127 pages.
DLNA. Overview and Vision, White Paper, Jun. 2004, 16 pages.
DLNA. Use Case Scenarios, White Paper, Jun. 2004, 15 pages.
Duo Soundolier. Sound & Light : Wireless Speaker Torchiere. Soundolier Integrated Wireless Technologies, 2006, 3 pages.
ECMA. Near Field Communication—White Paper, ECMA/TC32-TG19/2004/1, 9 pages [produced by Google in Inv. No. 337-TA-1191 on May 6, 2020].
ECMA. Near Field Communication, ECMA/TC32-TG19, Oct. 2002, 15 pages.
ECMA. Standard ECMA-340, Near Field Communication—Interface and Protocol NFCIP-1, Dec. 2002, 66 pages.
ECMA. What is ECMA? 2 pages [produced by Google in Inv. No. 337-TA-1191 on May 6, 2020].
Epson. EpsonNet 802.11B, Convenient Printing Using Wireless Technology, 2002, 2 pages.
Epson. EpsonNet 802.11b, User's Guide, 2002, 68 pages.
Epson Product Support Bulletin. PSB # PSB.2003.05.005, EpsonNet 802.11b Wireless Print Server, Apr. 30, 2003, 30 pages.
Epson Product Support Bulletin. PSB # PSB.2003.05.007, EpsonNet 802.11b Wireless Print Server, Apr. 23, 2003, 10 pages.
Epson Stylus C80WN. Quick Start, 2002, 2 pages.
Epson Stylus C80WN. Setup and Installation, Nov. 2001, 67 pages.
Extron System Integrator Speakers. System Integrator Speaker Series. ExtroNews. Issue 16.2, Winter 2005, 32 pages.
EZ-Stream 11 Mbps Wireless Audio Adapter. Model No. SMCWAA-B. Home Entertainment Networking, 2 pages [produced by Google in Inv. No. 337-TA-1191 on May 6, 2020].
Fielding et al. RFC 2616 Hypertext Transfer Protocol—HTTP/1.1, Jun. 1999, 114 pages.
First Action Pre-Interview Office Action dated Jun. 22, 2017, issued in connection with U.S. Appl. No. 14/516,883, filed Oct. 17, 2014, 4 pages.
Fried, John J. NewsRoom, Convergence melds personal computer, TV and stereo, Feb. 20, 2003, 4 pages.
Frodigh, Magnus. Wireless ad hoc networking—The art of networking without a network, Ericsson Review No. 4, 2000, 16 pages.
Gateway SOLO 5300 User Manual, 305 pages [produced by Google in Inv. No. 337-TA-1191 on May 6, 2020].
Godber et al. Secure Wireless Gateway. RightsLink. Arizona State University, pp. 41-46 [produced by Google in Inv. No. 337-TA-1191 on May 6, 2020].
Golem, WLAN-MP3-Player zum Anschluss an die Stereoanlage, Jun. 1, 2003, 2 pages.
Guttman, Erik. An API for the Zeroconf Multicast Address Allocation Protocol, Jun. 6, 2001, 11 pages.
Guttman, Erik. Autoconfiguration for IP Networking: Enabling Local Communication, Jun. 2001, 6 pages.
Guttman, Erik. Network Working Group, Zeroconf Host Profile Applicability Statement, Internet-Draft, Jul. 20, 2001, 9 pages.
Hawn, Andrew. TechTV, First Look: cd3o c300, 2004, 2 pages.
High Fidelity. New Wave in Speaker Design. Oct. 1980, 130 pages.
HomePod—Wireless Network Digital Music Player with FM Tuner, User Manual, 2003, 16 pages.
HomePod MP-100, Wireless Network Music Player, with USB Jukebox, Internet Radio, and FM Tuner, Specification, 2003, 2 pages.
HomePod. User Manual, Wireless Network Digital Audio Player with FM Tuner, 2003, 49 pages.
How cd30 Network MP3 Players Work, Feb. 2, 2004, 3 pages.
Howe et al. A Methodological Critique of Local Room Equalization Techniques, 5 pages [produced by Google in Inv. No. 337-TA-1191 on May 6, 2020].
IEEE Standards 8023. Part 3: Carrier sense multiple access with collision detection CSMA/CD access method and physical layer specifications, Mar. 8, 2002, 1562 pages.
LIVE. User's Guide IS809B Wireless Speaker System, Copyright 2010, 12 pages.
Intel Announces WS-Discovery Spec for Joining Devices and Web Services, Intel Developer Forum Spring 2004, Feb. 17, 2004, 4 pages.
Intel Sees Unified Platform and Ecosystem as Key to Enabling the Digital Home, Intel Developer Forum, Feb. 17, 2004, 4 pages.
Intel Tools Validate First Solutions that Enable Devices to Work Together in the Digital Home, Intel Developer Forum, Feb. 17, 2004, 2 pages.
Intel. Users Manual, An Intel Socket 478 Processor Based Mainboard. Mar. 27, 2003, 96 pages.
Introducing Roomlink Network Media Receiver—PCNA-MR10, Sony Vaio, 2003, 2 pages.
IPR Details—Apple Computer's Statement About IPR Claimed in draft-ietf-zeroconf-ipv4-linklocal, Apr. 26, 2004, 3 pages.
Omnifi DMS1 Wi-Fi Media Receiver p. 2, Sound & Vision, Copyright 2020, 7 pages.
Omnifi DMS1 Wi-Fi Media Receiver p. 3, Sound & Vision, Copyright 2020, 5 pages.
Parrot—All Products—Bluetooth Hands Free Car Kits, Oct. 21, 2008, 3 pages.
Parrot DS1120—Wireless Hi-Fi Stereo Sound System, Nov. 22, 2008, 3 pages.
Pinnacle ShowCenter. Pinnacle Systems, Mar. 2005, 132 pages.
Pohlmann, Ken. Omnifi DMS1 Wi-Fi Media Receiver. Sound & Vision, Oct. 20, 2003, 7 pages.
Publishing Network Services. Apple Developer Connection. Rendezous Network Services: Publishing Network Services, Nov. 12, 2002, 6 pages.
Rendezous Network Services: Resolving and Using Network Services. Apple Developer Connection, Nov. 12, 2002, 5 pages.
Rendezvous Network Services: About Rendezvous. Apple Developer Connection, Nov. 12, 2002, 5 pages.
Rocketfish. Digital Wireless Speakers. RF-WS01/WS01-W/WS02 User Guide, 2008, 28 pages.
Rocketfish. Wireless Outdoor Speaker. RF-RBWS02 User Guide, 2009, 33 pages.
Roku SoundBridge Network Music Player User Guide v2.5, 2006, 40 pages.
Rose, B., Home Networks: A Standards Perspective. In-Home Networking, IEEE Communications Magazine, Dec. 2001, 8 pages.
Schertel, Barry. Griffin Evolve Wireless iPod Speakers, Feb. 18, 2008, 4 pages.
Shannon, Victoria. The New York Times, Company supports Apple: Philips sets up a 'Rendezvous', Sep. 11, 2002, 2 pages.

(56) **References Cited**

OTHER PUBLICATIONS

Sieborger, D. R., Multiprotocol Control of Networked Home Entertainment Devices, Feb. 2004, 131 pages.
SMC EZ-Stream Universal Wireless Multimedia Receiver—NextUp, Dec. 5, 2003, 4 pages.
SMC Network. SMCWMR-AG—EZ-Stream Universal Wireless Multimedia Receiver, Dec. 3, 2003, 2 pages.
SMC Networks Consumer Site About SMC: Press Release Details, Feb. 21, 2004, 2 pages.
SMC Networks Consumer Site Products: Home Entertainment Networking, Dec. 10, 2003, 1 page.
SMC Networks Consumer Site Products: Home Entertainment Networking, Feb. 7, 2004, 1 page.
SMC Networks Consumer Site Support: Support Center Downloads, Feb. 7, 2004, 1 page.
SMC Networks EZ-Stream Universal 2.4GHz/5GHz Wireless Multimedia Receiver. SMCWMR-AG Users Manual, 60 pages [produced by Google in Inv. No. 337-TA-1191 on May 6, 2020].
SMC Networks. SMCWAA-B EZ-Stream 2.4GHz Wireless Audio Adapter. User Guide, 2004, 51 pages.
SMC Networks. SMCWMR-AG EZ-Stream Universal Wireless Multimedia Receiver. User Guide, 2003, 43 pages.
SMC-GT1255FTX-SC EZ Card. SMC Networks: What's New, Feb. 5, 2004, 7 pages.
Sony. Home Theatre System. HT-DDW790 and HT-DDW685 Operating Instructions, 2007, 64 pages.
Sony Shows Off Range of Home LANs, Dec. 15, 2000, 1 page.
Sound Blaster, Wireless Music. User's Guide: Creative Sound Blaster Wireless Music Version 1.0, Aug. 2003, 66 pages.
Space.com. Tech Today: News about the latest gizmos and gadgets conveniently available on Earth, Feb. 14, 2004, 2 pages.
Steve Jobs introduces AirPort Express All Things D2 (2004)—YouTube available via https://www.youtube.com/watch?v=hq5_P90pOqo 3 pages, [produced by Google in Inv. No. 337-TA-1191 on May 6, 2020].
Technology. cd30 is developing products which implement NAVOS, allowing consumers to get better utility out of their home media libraries. Nov. 21, 2003, 1 pages.
Thaler et al. Scalability and Synchronization in IEEE 1394-Based Content-Creation Networks. Audio Engineering Society Convention Paper 5461, Sep. 21-24, 2001, 16 pages.
Tom's Hardware Guide: Nachrichten. Nachrichten vom Jan. 10, 2003, 3 pages [produced by Google in Inv. No. 337-TA-1191 on May 6, 2020].
Trask, Simon. NewsRoom, Pro Sound News Europe, Bluetooth to drive wireless speakers, vol. 18; Issue 6, Jun. 1, 2003, 2 pages.
Tsai et al. SIM-based Subscriber Authentication for Wireless Local Area Networks, 2003, 6 pages.
United States Patent and Trademark Office, U.S. Appl. No. 60/379,313, filed May 9, 2002, entitled "Audio Network Distribution System," 49 pages.
United States Patent and Trademark Office, U.S. Appl. No. 60/379,313, filed May 9, 2002, entitled "Audio Network Distribution System," 50 page [produced by Google in Inv. No. 337-TA-1191 on May 6, 2020].
Urien et al. EAP-TLS Smartcards, from Dream to Reality, 4th Workshop on Applications and Services in Wireless Networks, Aug. 9, 2004, 19 pages.
Valtchev et al. In Home Networking, Service Gateway Architecture for a Smart Home, Apr. 2002, 7 pages.
Wi-Fi Alliance. Wi-Fi Protected Setup Specification, Version 1.0h, Dec. 2006, 110 pages.
Wildstrom, Stephen. At CES, Cool Tech Still Rules. BusinessWeek Online, Jan. 13, 2003, 3 pages.
Wilkins, N., SMC SMCWMR-AG EZ-Stream (wireless) review. CNET, Feb. 8, 2004, 3 pages.
Wilkins, N., SMC SMCWMR-AG EZ-Stream (wireless) review. CNET, Feb. 8, 2004, 5 pages.
Williams, A. Zero Configuration Networking. Requirements for Automatic Configuration of IP Hosts, Sep. 19, 2002, 19 pages.
Williams, Stephen. NewsRoom, Going Wireless, Oct. 21, 2003, 2 pages.
Williams, Stephen. NewsRoom, Newsday, As Wireless Evolves, Compatibility is Key, Jul. 21, 2003, 3 pages.
Windows XP: The Complete Reference—Chapter 19 Working with Sound, 6 pages [produced by Google in Inv. No. 337-TA-1191 on May 6, 2020].
Wired. Total Remote Control, Issue 11.06, Jun. 2003, 2 pages.
Wireless USB Adapter 11g CPWUA054, CPWUA054|00, CPWUA054|37, User Manual, Version: 1.0, Dec. 2003, 29 pages.
NewsRoom. San Jose Mercury News, Intel Fund to Invest in Digital Home, Jan. 7, 2004, 2 pages.
NewsRoom. Science & Technology: Wired for sound and video, Jan. 14, 2003, 3 page.
NewsRoom, Sears reveals plans for new Eatons stores, Oct. 26, 2000, 3 pages.
NewsRoom. Seattle Times, Inventions real stars of the show as speeches predict future 100,000 browse 'superstore', Jan. 13, 2003, 4 pages.
NewsRoom, Sensible Sound, Goin' to a show-show, Surveying the Soundscape, Jun. 1, 2003, 8 pages.
NewsRoom. Shaw, K., Cool Tools, Jan. 20, 2003, 2 pages.
NewsRoom. Sheehan, W., More brains, less brawn. Sep. 1, 2003, 3 pages.
NewsRoom. Sidener, J., Everett Roach, Jul. 14, 2003, 2 pages.
NewsRoom. Sirius XM Companies Flood Cedia With New Products. Satellite Week. Sep. 15, 2003, 2 pages.
NewsRoom. Slim Devices Introduces Slimserver, Nov. 18, 2003, 2 pages.
NewsRoom. Slim Devices Introduces Slimserver. PR Newswire. Nov. 18, 2003, 2 pages.
NewsRoom. Slim Devices Introduces Squeezebox, Nov. 18, 2003, 2 pages.
NewsRoom. SMC Sponsors Canada's First Combined 'Lan Event' for Gamers: DreamlanSMC, Jan. 15, 2004, 2 pages.
NewsRoom. SMC Sponsors Canada's First Combined 'Lan Event' for Gamers: DreamlanSMC, Jan. 15, 2004, 3 pages.
NewsRoom. SMC Sponsors Home by Design Showhouse/Connected by Design Tour, Jan. 6, 2004, 3 pages.
NewsRoom. SMC Teams with Get Digital to Offer Free Music Conversion to Its Wireless Audio Adapter Users, Feb. 23, 2004, 3 pages.
NewsRoom. SMC teams with Get Digital to offer free music conversion to wireless users, Mar. 29, 2004, 1 page.
NewsRoom. SMC to Offer Home Entertainment Networking Bundle With New Intel Desktop Boards, Nov. 3, 2003, 3 pages.
NewsRoom. Sonic divide crumbles, 2001 WLNR 5430795. Sep. 5, 2001, 3 pages.
NewsRoom. Sound and Fury the Latest in Volume and Video at SF Home Entertainment Show 6 Jun. 2003, 3 pages.
NewsRoom. Sound Blaster Goes Wireless, Sep. 30, 2003, 3 pages.
NewsRoom. St. Paul Pioneer Press, Guide to Better Giving You Know These People. Why Is It So Hard to Buy for Them? Maybe It's Not: Everyone Need Technology, From the Littlest Angel to the Most Resistant Grandparent, Nov. 24, 2003, 6 pages.
NewsRoom. Sullivan, A., Pluggedln—Digital music migrates to the home stereo, Oct. 28, 2003, 3 pages.
NewsRoom. Tech along, Jan. 25, 2004, 3 pages.
NewsRoom. Technology Life in the iPad. Mar. 15, 2007, 5 pages.
NewsRoom. Televisions defy hi-tech trend for minimalism, Feb. 19, 2004, 3 pages.
NewsRoom. The 50 Best Music Systems, Dec. 13, 2003, 15 pages.
NewsRoom. The Age (Australia), Fresh Gadgets, 2001 WLNR 13294645, Sep. 7, 2001, 3 pages.
NewsRoom. The Dallas Morning News, Honorable mentions worth a look, Nov. 20, 2003, 2 pages.
NewsRoom. The Dallas Morning News, Innovations Hasten Trend of on-the-Go Music, Video, Technology, Jan. 16, 2003, 4 pages.
NewsRoom. The Dallas Morning News, Wireless Technology Focus of Consumer Electronics Show in Las Vegas, Jan. 9, 2003, 4 pages.
NewsRoom, The Goods Whats' New What'S Hot, Nov. 9, 2000, 2 pages.

(56) **References Cited**

OTHER PUBLICATIONS

NewsRoom. The Next Ace in the Hole? —Epson HP set the stage for promising alternatives to wired solutions in vertical markets, Jan. 14, 2002, 3 pages.
NewsRoom. The Orange County Register, Holiday Season Brings Gift Ideas for Tech-Heads, Gadget Groupie, Dec. 8, 2003, 4 pages.
NewsRoom. The personal computer shows its creative side. Technology has discovered its next "killer app." Aug. 14, 2003, 3 pages.
NewsRoom. The top 25: computer shopper editors handpick this months best desktops notebooks digital audio receivers, handhelds, and software. Nov. 1, 2003, 3 pages.
NewsRoom. The toys of summer: Some cool tools that will get you through the lazy days. Sep. 1, 2003, 3 pages.
NewsRoom. The wide world of Wi-Fi: wherever you are, wireless networking is where it's at. Find out which Wi-Fi components will help you stay connected while . . . May 1, 2004, 7 pages.
NewsRoom. Ticker, Aug. 1, 2003, 2 pages.
NewsRoom. Washington Post, Ask the Computer Guy, Jan. 11 2004, 2 pages.
NewsRoom. Yamaha Announces the Worlds First Wireless Home Music System. Aug. 11, 2003, 2 pages.
NewsRoom. Yamaha Musiccast an easy way to spread music around your home. Dec. 1, 2003, 2 pages.
NewsRoom.Slim Devices Introduces Squeezebox. PR Newswire. Nov. 18, 2003, 2 pages.
Niles SI-1230. Systems Integration Amplifier. Installation & Operation Guide, 2009, 32 pages.
Niles SI-1260. Systems Integration Amplifier. Installation & Operation Guide, 2000, 32 pages.
Notice of Allowance dated May 29, 2020, issued in connection with U.S. Appl. No. 16/514,280, filed Jul. 17, 2019, 8 pages.
Notice of Allowance dated Jun. 2 2020, issued in connection with U.S. Appl. No. 15/946,660, filed Apr. 5, 2018, 5 pages.
Olenick, Doug. Networked MP3 Player Lineup Bows From cd3o. Jan. 9, 2003, 6 pages.
Olenick, Doug. Twice, Networked MP3 Player Lineup Bows from cd3o, Jan. 9, 2003, 2 pages.
Omnifi a Simple Media Experience. DMSI User Manual, Jul. 2003 36 pages.
NewsRoom. Chicago Sun Times, Wireless stream player hits the right notes, Jan. 17, 2004, 3 pages.
NewsRoom. Computer Shopper, Entertainment geekly: the blueprints have been drawn for a connected home that fuses the PC with entertainment devices. All you have to do is install . . . , Nov. 1, 2003, 6 pages.
NewsRoom. Computer Shopper, Tunes all around, vol. 23; Issue 11, 1 Nov. 2003, 1 page.
NewsRoom. Computer Shopper, What we want: here's the gear our editors are wishing for this year, vol. 23; Issue 12, 1 Dec. 2003, 8 pages.
NewsRoom. Computer Shopper, Wi-Fi meets Hi-Fi: here's how to stream music, still images, and videos to your home entertainment center, Nov. 1, 2003, 5 pages.
NewsRoom. Custom Home, Easy listening: the hard disk is shaping the future of home entertainment. (The Wired House)., May 1, 2003, 3 pages.
NewsRoom. D-Link to Supply Omnifi with Exclusive New Antenna for Streaming Audio Throughout the House, Jan. 8, 2004, 3 pages.
NewsRoom. Easdown, R., System Heaven: Custom House Technofile, Nov. 24, 2003, 5 pages.
NewsRoom. Electronic House Expo Announces 2005 Multi-Room Audio/Video Award Winners. Nov. 18, 2005, 3 pages.
NewsRoom. Electronic House Expo Fall 2003 Exhibitor Profiles. Business Wire. Nov. 11, 2003, 7 pages.
NewsRoom. Electronic House Expo Spring 2004 Exhibitor Profiles. Business Wire. Mar. 10, 2004, 7 pages.
NewsRoom. Evangelista, B., Sound and Fury the Latest in Volume and Video at SF Home Entertainment Show, Jun. 6, 2003, 3 pages.
NewsRoom. Fallon et al. The Goods, Jul. 31, 2003, 2 pages.
NewsRoom. Future shocks—Connect: Your ultimate home-entertainment guide, Dec. 4, 2003, 3 pages.
NewsRoom. Greg, T., Rooms with a tune, Jun. 23, 2003, 3 pages.
NewsRoom. Hoffman, A., Computer networks start entertaining, Jun. 1, 2003, 3 pages.
NewsRoom. Home theater systems that are a real blast, New Straits. Jan. 6, 2000, 3 pages.
NewsRoom. IDG's PC World Announces Winners of the 2004 World Class Awards, Jun. 2, 2004, 3 pages.
NewsRoom. InfoComm 2004 Exhibitors vol. 7, Issue 5, May 1, 2004, 24 pages.
NewsRoom. International Herald Tribune, Transmitting media gets easier cheaply, Jan. 31, 2004, 2 pages.
NewsRoom. Latest electronic gadgets unveiled in Las Vegas: Wireless Devices take centre stage, Jan. 13, 2003, 4 pages.
NewsRoom. Linksys Extends Wireless Functionality to the Television, Jul. 14, 2003, 3 pages.
NewsRoom. Linksys Ships Wireless-B Media Link for Streamlined Delivery of Music From PC to Stereo Stream MP3s, Play Lists and Internet Radio to Any Stereo With the Wireless-B Media Link for Music, May 19, 2004, 3 pages.
NewsRoom. Linksys Wireless Home Products Are Hot Tech Gifts for 2003, Nov. 24, 2003, 3 pages.
NewsRoom. Living room expansion—The PC is going from word processor to entertainment hub for many households, Aug. 18, 2003, 4 pages.
NewsRoom. Macy's Returns to Electronics With Home Theater Boutique, Aug. 11, 2003, 2 pages.
NewsRoom. Many different ways to enjoy digital music library, Apr. 29, 2003, 3 pages.
NewsRoom. Marlowe, C., Pad gadgets: home is where the gear is. Oct. 20, 2003, 2 pages.
NewsRoom. Miller II, S. A., Technology gets simpler and smarter, Jan. 14, 2003, 2 pages.
NewsRoom. Miller, M., Adapted for flight: hands-on trial: wireless media adapters send digital entertainment soaring from PC to living room. Sep. 18, 2003, 3 pages.
NewsRoom. Miller, S., Creating Virtual Jukeboxes Gadgets Make Digital Music Portable. Aug. 19, 2003, 3 pages.
NewsRoom. Morning Call, Cutting the cord; Wi-Fi networks connect computers, TVs, Dvd players and more without a clutter of wires, Feb. 2, 2003, 5 pages.
NewsRoom. Mossberg, W., PC-stored music sent without wires, Jan. 25, 2004, 2 pages.
NewsRoom. Nadel, B., Beam music, images from PC to stereo, TV: Linksys Wireless-B Media Adapter WMA11B. Nov. 1, 2003, 2 pages.
NewsRoom. Net Briefs, Jul. 21, 2003, 2 pages.
NewsRoom. NetWork World, The Toys of Summer, Sep. 1, 2003, 3 pages.
NewsRoom. Networked C300 Speaks Your Language. Apr. 6, 2003, 3 pages.
NewsRoom. New Camera—Now What? It's easy to go wild printing, sharing your digital photos. Oct. 16, 2003, 2 pages.
NewsRoom. New Products Allow Easier Access to Audio Video on Home Computers, Nov. 9, 2003, 3 pages.
NewsRoom. Newman, H., All-in-one Audio, Video Devices will be next big thing, Jan. 9, 2003, 3 pages.
NewsRoom. Norris, A., Come over to my house. Jan. 23, 2003, 3 pages.
NewsRoom. On the Printer Trail—Ream of new SMB models offers channel a range of sales hooks CRN Test Center finds. Oct. 13, 2003, 5 pages.
NewsRoom. One way to organize and weed Favorites, May 8, 2003, 3 pages.
NewsRoom, Outfitting your personal fortress of solitude, Mar. 14, 2002, 4 pages.
NewsRoom. Philadelphia Inquirer, Wireless solution for stereo sound, Aug. 7, 2003, 3 pages.
NewsRoom. Popular Science, Yamaha Musiccast an easy way to spread music around your home, Dec. 1, 2003, 2 pages.
NewsRoom. PR Newswire, "Home Director Announces Availability of AudioPoint Receiver," Sep. 27, 2002, 4 pages.

(56) **References Cited**

OTHER PUBLICATIONS

NewsRoom. Preview the New EZ-Stream Wireless Audio Adapter at CES Jan. 8-11, 2004 BridgeCo Booth 19629, Jan. 7, 2004, 3 pages.
NewsRoom. Receiver Lets Stereo Join the Wi-Fi Band, Apr. 10, 2003, 2 pages.
NewsRoom. Rogers, P., Speaker Screech: The End Is Near, Apr. 8, 2003, 2 pages.
Johnson, Ian. SMC EZ-Stream Universal Wireless Multimedia Receiver—The Globe and Mail, Dec. 3, 2003, 6 pages.
Kostiainen, K., Intuitive Security Initiation Using Location-Limited Channels. Helsinki University of Technology, Masters Thesis Apr. 14, 2004, 86 pages.
Kraemer, Alan. Two Speakers Are Better Than 5.1—IEEE Spectrum, May 1, 2001, 6 pages.
Linksys 2.4GHz Wireless-B—User Guide Media Link for Music Model WML11B/WMLS11B, 68 pages [produced by Google in Inv. No. 337-TA-1191 on May 6, 2020].
Linksys 2.4GHz Wireless-B—User Guide V2 Model WMA11B, 68 pages [produced by Google in Inv. No. 337-TA-1191 on May 6, 2020].
Linksys. Quick Installation for Windows XP Only. Wireless-B Media Adapter, 2 pages [produced by Google in Inv. No. 337-TA-1191 on May 6, 2020].
Linksys. Wireless Adapters, 2003, 2 pages.
Linksys. Wireless PrintServer, User Guide, Model No. WPS11 Version 3, 2002, 31 pages.
Linksys Wireless-B Media Adapter—User Guide V1 Model WMA11B, 2003, 32 pages.
Linksys. Wireless-B Media Adapter, Product Data, Model No. WMA11B, 2003, 2 pages.
Linksys. Wireless-B Media Adapter, WMA11B, 2003, 2 pages.
Ljungstrand et al. UBICOMP 2002, Adjunct Proceedings, Fourth International Conference on Ubiquitous Computing, 2002, 90 pages.
Logitech Slimserver. Server for Logitech Squeezebox Players. 1 page [produced by Google in Inv. No. 337-TA-1191 on May 6, 2020].
Logitech/slimserver. Github. 1 page [produced by Google in Inv. No. 337-TA-1191 on May 6, 2020].
Logitech/Slimserver. Github. Version 23 Release. May 19, 2002. 2 pages [produced by Google in Inv. No. 337-TA-1191 on May 6, 2020].
Marchetti, Nino. EdgeReview, Ces 2003 Home Network Entertainment, Jan. 28, 2003, 2 pages.
McGlaun, Shane. Best Buy unveils new Rocketboost RF-RBKIT whole home audio solution and more. Oct. 22, 2009, 7 pages.
MediaLounge Entertainment Network D-Link DSM-320 Wireless Media Player Manual v 1.0, 59 pages [produced by Google in Inv. No. 337-TA-1191 on May 6, 2020].
Micro-Star International. 865PE Neo2. MS-6728 v1.X ATX Mainboard. Version 1.1. Apr. 2003, 118 pages.
Miller II, Stanley. Technology gets simpler and smarter. JSOnline Milwaukee Journal Sentinel, Jan. 13, 2003, 3 pages.
Moses, B., Home Networking Using IEEE 1394 in Combination with Other Networking Technologies. Audio Delivery. The Changing Home Experience—AES 17 UK Conference 2002, 16 pages.
Muherim et al. On the Performance of Clock Synchronization Algorithms for a Distributed Commodity Audio System. Audio Engineering Society Convention Paper presented at 114th Convention Mar. 22-25, 2003, 12 pages.
Murph, Darren. Rocketfish Wireless Whole Home Audio System Cuts the Cord on All Your Speakers. Engadget. Oct. 23, 2009, 9 pages.
Musica MU4602. Audio Distribution System. Data Sheet, 2004, 2 pages.
MusicCAST. Interactive Wireless. Home Music Network System, 6 pages [produced by Google in Inv. No. 337-TA-1191 on May 6, 2020].
MusicCAST System—About the Quick Manual, 1999, 7 pages.
Netgear. User's Manual for the MP101 Digital Music Player, Version 1.2, May 2004, 48 pages.
NetStreams. Musica MU4602 Audio Distribution System. Data Sheet. Copyright 2004, 2 pages.
NetStreams. Panorama PAN6400 Multi-Room Video & Control System Installation Guide, Jan. 1, 2006, 64 pages.
NetStreams Product Catalog 2003-2004. Creating the Future of Home Entertainment Today 20 pages.
Network Working Group. Zeroconf Multicast Address Allocation Protocol, Internet-Draft, Oct. 22, 2002, 14 pages.
NewRoom. Sirius, XM Companies Flood Cedia with New Products, Sep. 15, 2003, 2 pages.
NewRoom. SMC Ships New EZ-Stream Universal 80211ag Wireless Router, Jan. 14, 2004, 3 pages.
NewsRoom. AP DataStream, Wall Street Journal Digest, Jan. 15, 2004, 3 pages.
NewsRoom. AP Online, AP Technology NewsBrief. Dec. 26, 2003, 2 pages.
NewsRoom. AP Online, AP Technology NewsBrief. Dec. 27, 2003, 2 pages.
NewsRoom. Belleville News Democrat, Tunes, Pictures From Computer Can Be Sent to Your TV, Stereo, Dec. 27, 2003, 2 pages.
NewsRoom. BridgeCo Successfully Concludes Second Financing Round of US $13.3 Million, Business Wire, Jan. 9, 2003, 3 pages.
NewsRoom. Business Line, Cisco arm rolls out products for Soho. Nov. 5, 2003, 2 pages.
NewsRoom. Business Wire, BridgeCo Adds Wireless Connectivity and Enhances Surround Sound Processing for New Generation Speakers. May 5, 2003, 3 pages.
NewsRoom. Business Wire, BridgeCo Launches Entertainment Network Adapter at CES2003, Jan. 9, 2003, 3 pages.
NewsRoom. Business Wire, BridgeCo Launches Entertainment Network Adapter for Pro Audio at NAMM Show, Jan. 16, 2003, 3 pages.
NewsRoom. Business Wire, BridgeCo Opens Usa Business Development HQ in Silicon Valley and Expands Management Team, Mar. 15, 2004, 3 pages.
NewsRoom. Business Wire, BridgeCo Releases Silicon and Firmware Platform Compatible with Microsoft Windows Media Connect and Windows Media DRM Technology. May 3, 2004, 3 pages.
NewsRoom. Business Wire, CSR and BridgeCo Launch Design for New Generation Wireless Speakers; Transforms Traditional Speakers into Portable Internet Radio, May 6, 2003, 3 pages.
NewsRoom. Business Wire, Epson Announces the Epson Stylus Photo 900: The First Photo Printer Under $200 to Print Directly Onto CDs and DVDs; New Printer Offers a Complete Printing Solution for Digital Lifestyles, Apr. 16, 2003, 4 pages.
NewsRoom. Business Wire, Good Guys Unveils Top 10 Holiday Electronics Gifts; Advances in Technology and Lower Prices Across the Industry Make for Great Deals on in-Demand Products This Season, Dec. 3, 2003, 3 pages.
NewsRoom. Bytestechnology Briefing, Feb. 19, 2002, 2 pages.
NewsRoom. CEA Announces 2007 Mark of Excellence Award Winners, Mar. 10, 2007, 3 pages.
NewsRoom. CEDIA Abuzz with Trends—Integrators agree: The hot products at this years expo are the start of a revolutionary move for the home automation market Oct. 9, 2006, 4 pages.
Yahoo Finance. BridgeCo Successfully Commercializes its BeBoB Application for the Music Industry: Four Manufacturers Demonstrate BeBoB-enabled Products at NAMM 2004. Jan. 16, 2004, 3 pages.
Yamaha. Digital Audio Server, MCX-1000, Owner's Manual, 1996-2002, 148 pages.
Yamaha MusicCAST Digital Audio Server MCX-1000 Owner's Manual, Copyright 1996-2002, 148 pages.
Yamaha, MusicCAST: Digital Audio Terminal MCX-A10, Owner's Manual. Jun. 4, 2003, 76 pages.
Yamaha Personal Receiver RP-U200 Operation Manual ("Operation Manual"), Copyright 1992-1997, 57 pages.
Zero Configuration networking with Bonjour—YouTube available via https://www.youtube.com/watch?v=ZhtZJ6EsCXo 3 pages [produced by Google in Inv. No. 337-TA-1191 on May 6, 2020].

(56) **References Cited**

OTHER PUBLICATIONS

Zeroconf Working Group, Dynamic Configuration of IPv4 Link-Local Addresses, Internet-Draft, Jul. 8, 2004, 62 pages.
Zeroconf Working Group, Dynamic Configuration of IPv4 Link-Local Addresses, Internet-Draft, Jul. 1, 2004, 60 pages.
Zeroconf Working Group, Dynamic Configuration of IPv4 Link-Local Addresses, Internet-Draft, Jun. 7, 2004, 62 pages.
Zeroconf Working Group, Dynamic Configuration of Link-Local IPv4 Addresses, Internet-Draft, Feb. 16, 2004, 60 pages.
Zeroconf Working Group, Dynamic Configuration of Link-Local IPv4 Addresses, Internet-Draft, Mar. 31, 2004, 60 pages.
Carnoy, David. Parrot DS1120 Wireless Hi-Fi Speaker System Review, Jul. 15, 2008, 4 pages.
Case et al. RFC 1157—A Simple Network Management Protocol, May 1990, 36 pages.
Cd30. Audio Control Document V4.2 Released! Sep. 18, 2003, 7 pages.
Cd30 Audio Control Protocol. Version 4.2. Sep. 18, 2003, 24 pages.
Cd30. Audio Stream Protocol Released. Mar. 9, 2004, 2 pages.
Cd30. Audio Stream Protocol: Version 18. Mar. 9, 2004, 13 pages.
Cd30 Backgrounder, 1 page [produced by Google in Inv. No. 337-TA-1191 on May 6, 2020].
Cd30. c100 Network MP3 Player. Quick Product Summary .1 page [produced by Google in Inv. No. 337-TA-1191 on May 6, 2020].
Cd30. c200 Wireless Network MP3 Player. Quick Product Summary. 1 page [produced by Google in Inv. No. 337-TA-1191 on May 6, 2020].
Cd30. c300 Extended-Range Wireless Network MP3 Player. Quick Product Summary, 1 page [produced by Google in Inv. No. 337-TA-1191 on May 6, 2020].
Cd30 C300 Reviews. Digital Audio Receivers (DARs) Reviews by CNET, Mar. 30, 2003, 3 pages.
Cd30. Careers, Nov. 21, 2003, 1 page.
Cd30. Contact, Dec. 12, 2003, 1 page.
Cd30. Corporate Fact Sheet, 1 page [produced by Google in Inv. No. 337-TA-1191 on May 6, 2020].
Cd30 FAQs. What problem or need does cd30 address with their products? 2 pages [produced by Google in Inv. No. 337-TA-1191 on May 6, 2020].
Cd30 Frequently-Asked Questions About cd30 Network MP3 Players, Dec. 12, 2003, 6 pages.
Cd30 Introduces Family of MP3 Players at this year's Consumer Electronics Show. Jan. 9-12, 2003, Las Vegas convention Center, Feb. 12, 2004, 2 pages.
Cd30 Introduces Family of MP3 Players at this year's Consumer Electronics Show. Jan. 9-12, 2003, Las Vegas convention Center, 2 pages.
Cd30 Introduces Family of Wireless Network MP3 Players. Jan. 9-12, 2003 Las Vegas Convention Center, 2 pages.
Cd30. Logo page, 1 page [produced by Google in Inv. No. 337-TA-1191 on May 6, 2020].
Cd30 Management, Dec. 12, 2003, 1 page.
Cd30. Management Team, 1 page [produced by Google in Inv. No. 337-TA-1191 on May 6, 2020].
Cd30. Multi-Player Synchronization. Jan. 15, 2004, 4 pages.
Cd30 Network MP3 Player Models, 01 Feb. 2004, 1 page.
Cd30, Network MP3 Player, Product Manual. Copyright 2003, 65 pages.
Cd30 Network MP3 Player. Product Manual for c100, c200, and c300, 2003, 65 pages.
Cd30. Network MP3 Player. Quick Installation Guide, 1 page [produced by Google in Inv. No. 337-TA-1191 on May 6, 2020].
Cd30 Network MP3 Player Reviews. Feb. 1, 2004, 2 pages.
Cd30 Network MP3 Player Specifications. Feb. 2, 2004, 2 pages.
Cd30 Network MP3 Players, Nov. 18, 2003, 1 page.
Cd30 Network MP3 Players c100, c200, and c300, 1 page [produced by Google in Inv. No. 337-TA-1191 on May 6, 2020].
Cd30 Network MP3 Players: Stream music from your PC to your stereo, Nov. 18, 2003, 1 page.
Cd30 Network MP3 Players: Stream your MP3s to your stereo! May 24, 2003, 1 page.
Cd30. News, Reviews 21 Nov. 21 2003, 2 pages.
Cd30. Product Support. May 10, 2006, 17 pages.
Cd30 Product Support Forums. Forum Index, Apr. 15, 2003, 1 page.
Cd30 Product Support Forums. Forum Index, Jun. 18, 2003, 1 page.
CD30 Product Support Forums. Forum Index, Feb. 2, 2004, 1 page.
Cd30. Product Support Forums. Multiple stereos—multiple cd30s—same music? Nov. 3, 2003, 2 pages.
Cd3o. Network MP3 Player, Product Manual, 2003, 65 pages.
Cd3o Product Support Center, Nov. 19, 2003, 1 page.
CES: MP3-Player mit Pfiff, Jan. 13, 2003, 4 page [produced by Google in Inv. No. 337-TA-1191 on May 6, 2020].
Cheshire et al. RFC 3927—Dynamic Configuration of IPv4 Link-Local Addresses, 2005, 34 pages.
Cheshire et al. Zero Configuration Networking: The Definitive Guide. Dec. 2005, 288 pages.
Clipsal. Multi Room Audio Amplifier, User's Guide, V1.0, Dec. 2005, 28 pages.
Clipsal. Multi Room Audio Matrix Switcher, User's Guide, 560884, V1.0, Dec. 2005, 20 pages.
C-Media. CM102-A/102S USB 2CH Audio Controller, Data Sheet. Version 1.4.21 May 2003, 20 pages.
CNET. Wireless gizmo for PC music hits home, Sep. 30, 2003, 4 pages.
Compaq et al., Universal Serial Bus Specification, Revision 2.0, Apr. 27, 2000, 650 pages.
Advisory Action dated Mar. 8, 2017, issued in connection with U.S. Appl. No. 13/871,795, filed Apr. 26, 2013, 22 pages.
Chinese Patent Office, Second Office Action dated Feb. 27, 2017, issued in connection with Chinese Patent Application No. 201380044380.2, 22 pages.
IEEE Standards 1588-2002. IEEE Standard for a Precision Clock Synchronization Protocol for Networked Measurement and Control Systems, Nov. 8, 2002, 154 pages.
Japanese Patent Office, Office Action and Translation dated Aug. 17, 2020, issued in connection with Japanese Patent Application No. 2019-104398, 5 pages.
Non-Final Office Action datd Aug. 11, 2020, issued in connection with U.S. Appl. No. 16/383,910, filed Apr. 15, 2019, 23 pages.
Non-Final Office Action dated Aug. 5, 2020, issued in connection with U.S. Appl. No. 16/544,905, filed Aug. 20, 2016, 15 pages.
Notice of Allowance dated Jul. 13, 2020, issued in connection with U.S. Appl. No. 16/516,567, filed Jul. 19, 2019, 19 pages.
Notice of Allowance dated Sep. 16, 2020, issued in connection with U.S. Appl. No. 15/946,660, filed Apr. 5, 2018, 5 pages.
Notice of Allowance dated Sep. 22, 2020, issued in connection with U.S. Appl. No. 16/545,844, filed Aug. 20, 2019, 8 pages.
Notice of Allowance dated Aug. 24, 2020, issued in connection with U.S. Appl. No. 16/009,182, filed Jun. 14, 2018, 8 pages.
Notice of Allowance dated Sep. 29, 2020, issued in connection with U.S. Appl. No. 16/459,565, filed Jul. 1, 2019, 7 pages.
Notice of Allowance dated Sep. 29, 2020, issued in connection with U.S. Appl. No. 16/516,567, filed Jul. 19, 2019, 7 pages.
Slim Devices. Index of /downloads. slimdevices.com, Apr. 13, 2003, 1 page.
Slim Devices. Index of /downloads/SLIMP3_Server_v4.0. slimdevices.com, Apr. 14, 2003, 1 page.
Slim Devices. Support Downloads. slimdevices.com, Apr. 11, 2003, 1 page.
Sonos, Inc. v. *Google LLC*. Order 20: Construing the Terms of the Asserted Claims of the Patents at Issue dated Sep. 25, 2020, 53 pages.
Sonos, Inc. v. *Google LLC*. Respondents' Final Invalidity Claim Charts for U.S. Pat. No. 10,209,953, Exhibits 1-10 and B, dated Sep. 4, 2020, 406 pages.
Sonos, Inc. v. *Google LLC*. Respondents' Final Invalidity Claim Charts for U.S. Pat. No. 9,195,258, Exhibits 1-10 and B, dated Sep. 4, 2020, 461 pages.
Sonos, Inc. v. *Google LLC*. Respondents' Final Invalidity Contentions [Redacted] dated Sep. 4, 2020, 261 pages.

(56) **References Cited**

OTHER PUBLICATIONS

Sonos, Inc. v. *Google LLC*, Expert Report of Dan Schonfeld, Ph.D., Regarding Invalidity of Asserted Claims of U.S. Pat. Nos. 9,195,258 and 10,209,953 [Redacted] dated Oct. 23, 2020, 387 pages.
Final Office Action dated Oct. 28, 2020, issued in connection with U.S. Appl. No. 16/459,605, filed Jul. 1, 2019, 14 pages.
Non-Final Office Action dated Oct. 20, 2020, issued in connection with U.S. Appl. No. 16/459,661, filed Jul. 2, 2019, 9 pages.
Notice of Allowance dated Dec. 15, 2020, issued in connection with U.S. Appl. No. 15/946,660, filed Apr. 5, 2018, 5 pages.
Notice of Allowance dated Nov. 25, 2020, issued in connection with U.S. Appl. No. 16/999,048, filed Aug. 20, 2020, 9 pages.
Sonos, Inc. v. *Google LLC*, Complainant Sonos, Inc.'s Pre-Hearing Brief [Redacted Jan. 29, 2021] dated Jan. 22, 2021, 513 pages.
Sonos, Inc. v. *Google LLC*, Direct Witness Statement of Dan Schonfeld, Ph.D. [Redacted Jan. 29, 2021] dated Dec. 18, 2020, 390 pages.
Sonos, Inc. v. *Google LLC*, Rebuttal Expert Report of Kevin C. Almeroth [Redacted Jan. 29, 2021] dated Nov. 13, 2020, 547 pages.
Sonos, Inc. v. *Google LLC*, Rebuttal Witness Statement of Kevin C. Almeroth [Redacted Jan. 29, 2021] dated Jan. 8, 2021, 735 pages.
Sonos, Inc. v. *Google LLC*, Respondent Google's Pre-Trial Brief [Redacted Jan. 29, 2021] dated Jan. 22, 2021, 516 pages.
Final Office Action dated Mar. 30, 2021, issued in connection with U.S. Appl. No. 15/383,910, filed Apr. 15, 2019, 15 pages.
Japanese Patent Office, Decision of Refusal and Translation dated , issued in connection with Japanese Patent Application No. 2019-104398. 5 pages.

* cited by examiner

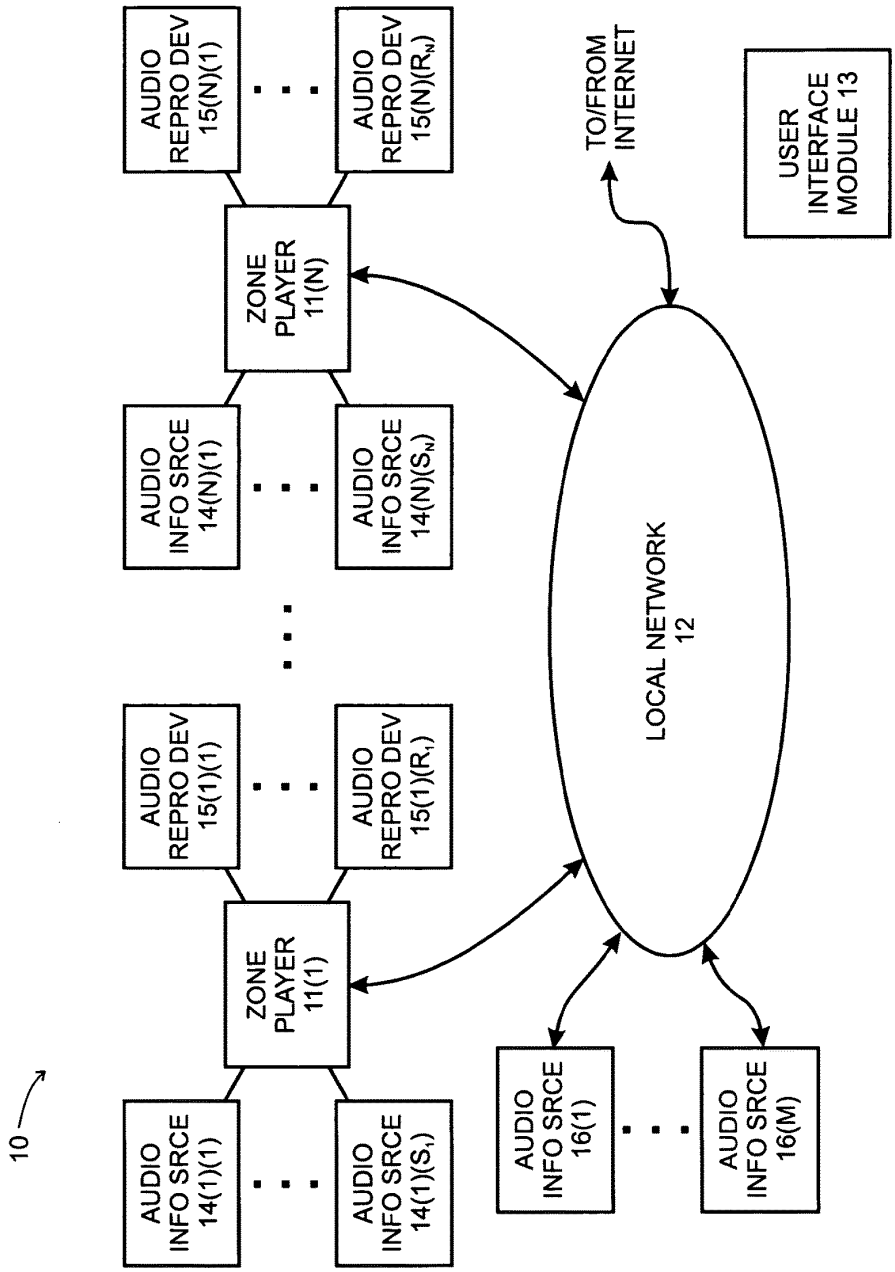
10
AUDIO INFO SRCE 14(1)(1)
AUDIO INFO SRCE 14(1)(S1)
ZONE PLAYER 11(1)
AUDIO REPRO DEV 15(1)(1)
AUDIO REPRO DEV 15(1)(R1)
AUDIO INFO SRCE 14(N)(1)
AUDIO INFO SRCE 14(N)(SN)
ZONE PLAYER 11(N)
AUDIO REPRO DEV 15(N)(1)
AUDIO REPRO DEV 15(N)(RN)
LOCAL NETWORK 12
TO/FROM INTERNET
USER INTERFACE MODULE 13
AUDIO INFO SRCE 16(1)
AUDIO INFO SRCE 16(M)

FIG. 1

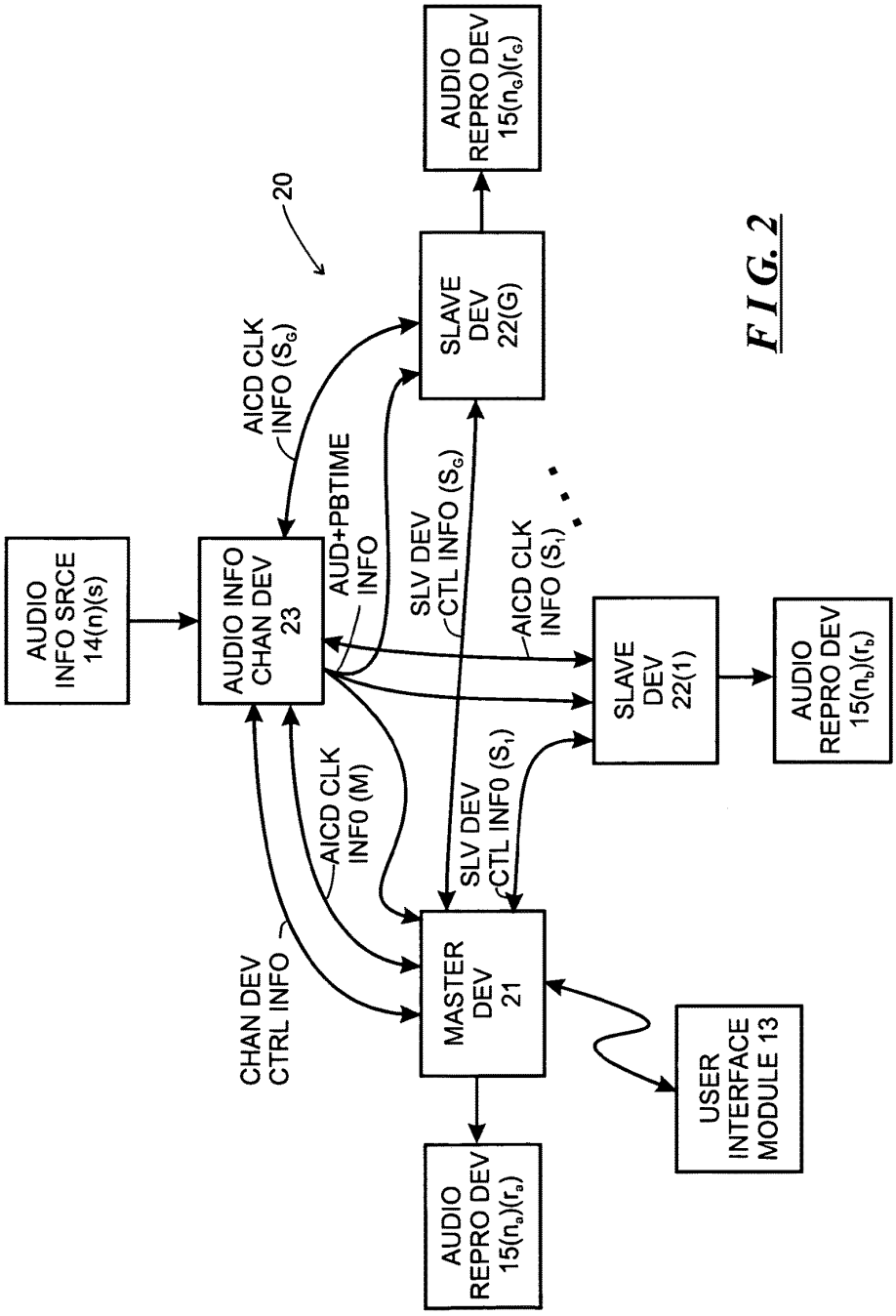
AUDIO INFO SRCE 14(n)(s)
AUDIO INFO CHAN DEV 23
20
AICD CLK INFO (S_G)
AUD+PBTIME INFO
SLAVE DEV 22(G)
AUDIO REPRO DEV 15(n_G)(r_G)
SLV DEV CTL INFO (S_G)
AICD CLK INFO (S_1)
SLAVE DEV 22(1)
AUDIO REPRO DEV 15(n_b)(r_b)
AICD CLK INF0 (M)
SLV DEV CTL INF0 (S_1)
CHAN DEV CTRL INFO
MASTER DEV 21
USER INTERFACE MODULE 13
AUDIO REPRO DEV 15(n_a)(r_a)

FIG. 2

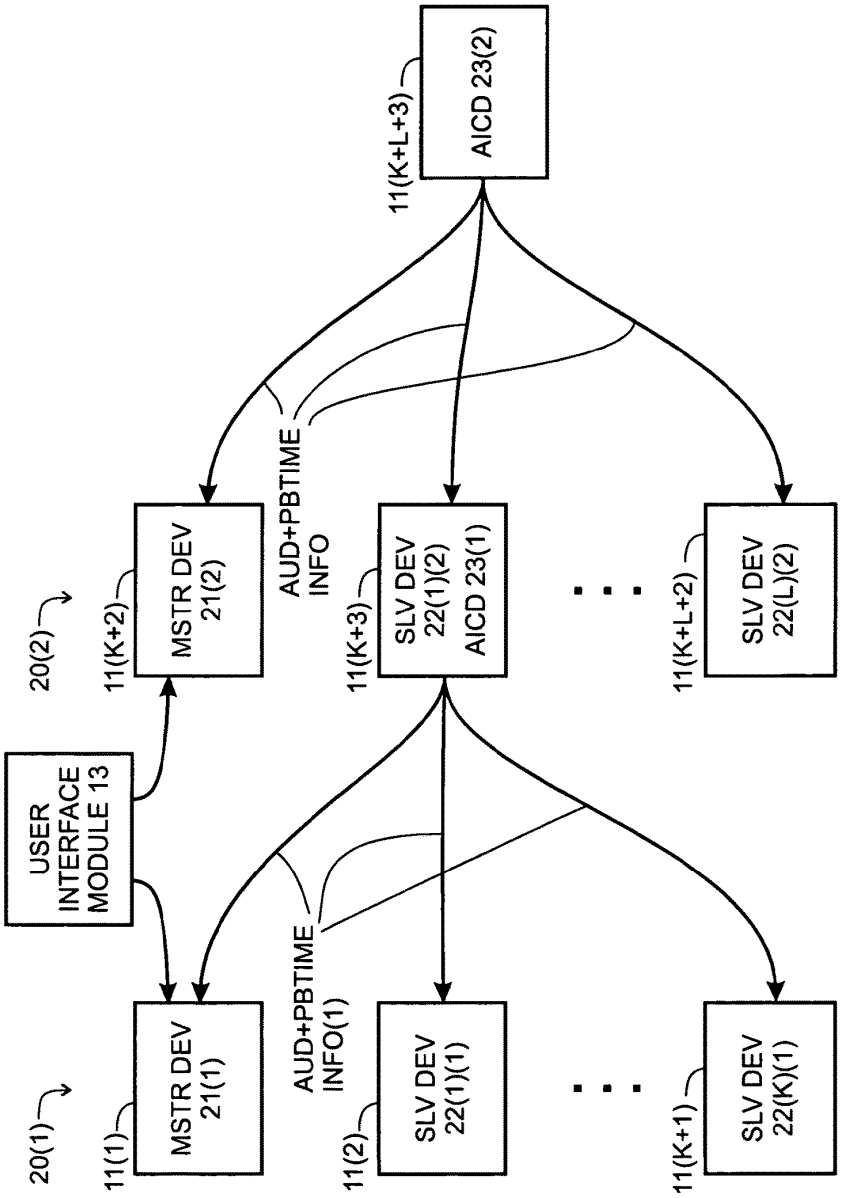
USER INTERFACE MODULE 13
20(1)
20(2)
11(1)
MSTR DEV 21(1)
11(2)
SLV DEV 22(1)(1)
11(K+1)
SLV DEV 22(K)(1)
AUD+PBTIME INFO(1)
11(K+2)
MSTR DEV 21(2)
11(K+3)
SLV DEV 22(1)(2) AICD 23(1)
11(K+L+2)
SLV DEV 22(L)(2)
AUD+PBTIME INFO
11(K+L+3)
AICD 23(2)

FIG. 2A

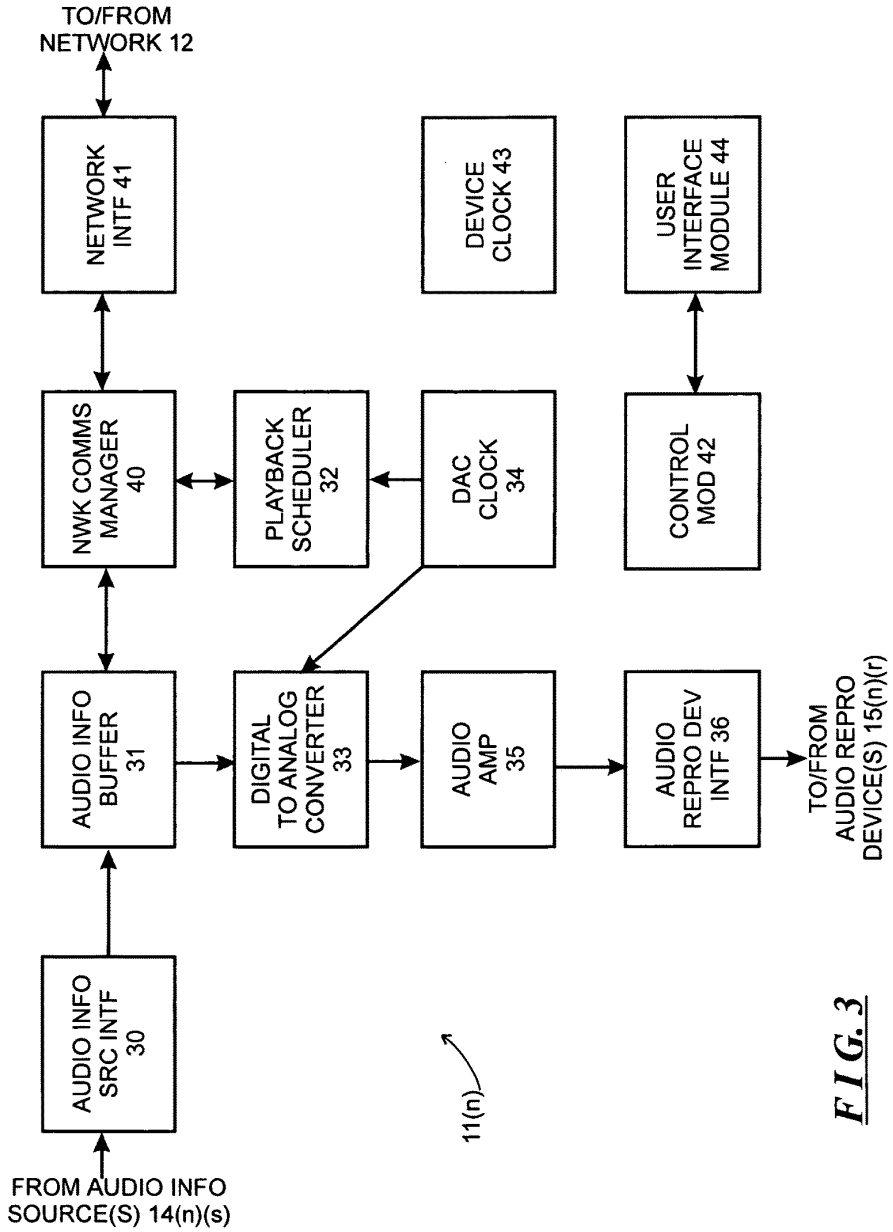
TO/FROM NETWORK 12
NETWORK INTF 41
NWK COMMS MANAGER 40
AUDIO INFO BUFFER 31
AUDIO INFO SRC INTF 30
FROM AUDIO INFO SOURCE(S) 14(n)(s)
PLAYBACK SCHEDULER 32
DIGITAL TO ANALOG CONVERTER 33
DEVICE CLOCK 43
DAC CLOCK 34
AUDIO AMP 35
11(n)
USER INTERFACE MODULE 44
CONTROL MOD 42
AUDIO REPRO DEV INTF 36
TO/FROM AUDIO REPRO DEVICE(S) 15(n)(r)

FIG. 3

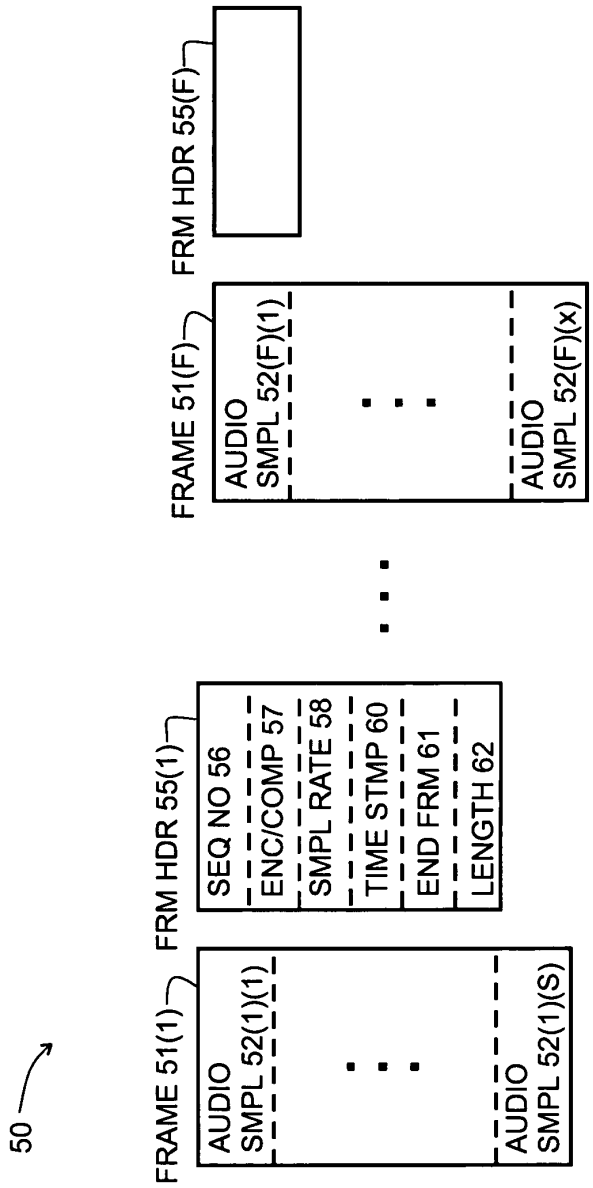
50
FRAME 51(1)
AUDIO SMPL 52(1)(1)
AUDIO SMPL 52(1)(S)
FRM HDR 55(1)
SEQ NO 56
ENC/COMP 57
SMPL RATE 58
TIME STMP 60
END FRM 61
LENGTH 62
FRAME 51(F)
AUDIO SMPL 52(F)(1)
AUDIO SMPL 52(F)(x)
FRM HDR 55(F)

FIG. 4

CONCURRENT TRANSMISSION AND PLAYBACK OF AUDIO INFORMATION

INCORPORATION BY REFERENCE

This application claims priority under 35 USC § 120 of U.S. application Ser. No. 13/297,000, filed Nov. 15, 2011, entitled "System And Method For Synchronizing Operations Among A Plurality Of Independently Clocked Digital Data Processing Devices", which is a continuation of patent application Ser. No. 10/816,217, now U.S. Pat. No. 8,234,395, filed on Apr. 1, 2004, entitled "System and Method for Synchronizing Operations Among a Plurality of Independently Clocked Digital Data Processing Devices", which is a non-provisional application claiming priority under 35 USC § 119 to Provisional Patent Application Ser. No. 60/490,768, filed on Jul. 28, 2003, entitled "Method for Synchronizing Audio Playback Between Multiple Networked Devices," all of which are assigned to the assignee of the present application and are incorporated herein by reference.

FIELD OF THE INVENTION

The present invention relates generally to the field of digital data processing devices, and more particularly to systems and methods for synchronizing operations among a plurality of independently-clocked digital data processing devices. The invention is embodied in a system for synchronizing operations among a plurality of devices, in relation to information that is provided by a common source. One embodiment of the invention enables synchronizing of audio playback as among two or more audio playback devices that receive audio information from a common information source, or channel.

More generally, the invention relates to the field of arrangements that synchronize output generated by a number of output generators, including audio output, video output, combinations of audio and video, as well as other types of output as will be appreciated by those skilled in the art, provided by a common channel. Generally, the invention will find utility in connection with any type of information for which synchrony among independently-clocked devices is desired.

BACKGROUND OF THE INVENTION

There are a number of circumstances under which it is desirable to maintain synchrony of operations among a plurality of independently-clocked digital data processing devices in relation to, for example, information that is provided thereto by a common source. For example, systems are being developed in which one audio information source can distribute audio information in digital form to a number of audio playback devices for playback. The audio playback devices receive the digital information and convert it to analog form for playback. The audio playback devices may be located in the same room or they may be distributed in different rooms in a residence such as a house or an apartment, in different offices in an office building, or the like. For example, in a system installed in a residence, one audio playback device may be located in a living room, while another audio playback device is be located in a kitchen, and yet other audio playback devices may be located in various bedrooms of a house. In such an arrangement, the audio information that is distributed to various audio playback devices may relate to the same audio program, or the information may relate to different audio programs. If the audio information source provides audio information relating to the same audio program to two or more audio playback devices at the same time, the audio playback devices will generally contemporaneously play the same program. For example, if the audio information source provides audio information to audio playback devices located in the living room and kitchen in a house at the same time, they will generally contemporaneously play the same program.

One problem that can arise is to ensure that, if two or more audio playback devices are contemporaneously attempting to play back the same audio program, they do so simultaneously. Small differences in the audio playback devices' start times and/or playback speeds can be perceived by a listener as an echo effect, and larger differences can be very annoying. Differences can arise because for a number of reasons, including delays in the transfer of audio information over the network. Such delays can differ as among the various audio playback devices for a variety of reasons, including where they are connected into the network, message traffic and other reasons as will be apparent to those skilled in the art.

Another problem arises from the following. When an audio playback device converts the digital audio information from digital to analog form, it does so using a clock that provides timing information. Generally, the audio playback devices that are being developed have independent clocks, and, if they are not clocking at precisely the same rate, the audio playback provided by the various devices can get out of synchronization.

SUMMARY OF THE INVENTION

The invention provides a new and improved system and method for synchronizing operations among a number of digital data processing devices that are regulated by independent clocking devices. Generally, the invention will find utility in connection with any type of information for which synchrony among devices connected to a network is desired. The invention is described in connection with a plurality of audio playback devices that receive digital audio information that is to be played back in synchrony, but it will be appreciated that the invention can find usefulness in connection with any kind of information for which coordination among devices that have independent clocking devices would find utility.

In brief summary, the invention provides, in one aspect, a system for maintaining synchrony of operations among a plurality of devices that have independent clocking arrangements. The system includes a task distribution device that distributes tasks to a synchrony group comprising a plurality of devices that are to perform the tasks distributed by the task distribution device in synchrony. The task distribution device distributes each task to the members of the synchrony group over a network. Each task is associated with a time stamp that indicates a time, relative to a clock maintained by the task distribution device, at which the members of the synchrony group are to execute the task. Each member of the synchrony group periodically obtains from the task distribution device an indication of the current time indicated by its clock, determines a time differential between the task distribution device's clock and its respective clock and determines therefrom a time at which, according to its respective clock, the time stamp indicates that it is to execute the task.

In one embodiment, the tasks that are distributed include audio information for an audio track that is to be played by all of the devices comprising the synchrony group synchronously. The audio track is divided into a series of frames, each of which is associated with a time stamp indicating the time, relative to the clock maintained by an audio information channel device, which, in that embodiment, serves as the task distribution device, at which the members of the synchrony group are to play the respective frame. Each member of the synchrony group, using a very accurate protocol, periodically obtains the time indicated by the audio information channel device, and determines a differential between the time as indicated by its local clock and the audio information channel device's clock. The member uses the differential and the time as indicated by the time stamp to determine the time, relative to its local clock, at which it is to play the respective frame. The members of the synchrony group do this for all of the frames, and accordingly are able to play the frames in synchrony.

BRIEF DESCRIPTION OF THE DRAWINGS

This invention is pointed out with particularity in the appended claims. The above and further advantages of this invention may be better understood by referring to the following description taken in conjunction with the accompanying drawings, in which:

FIG. **1** schematically depicts an illustrative networked audio system, constructed in accordance with the invention;

FIG. **2** schematically depicts a functional block diagram of a synchrony group utilizing a plurality of zone players formed within the networked audio system depicted in FIG. **1**;

FIG. **2**A schematically depicts two synchrony groups, illustrating how a member of one synchrony group can provide audio information to the members of another synchrony group;

FIG. **3** depicts an functional block diagram of a zone player for use in the networked audio system depicted in FIG. **1**; and

FIG. **4** is useful in understanding an digital audio information framing methodology useful in the network audio system depicted in FIG. **1**.

DETAILED DESCRIPTION OF AN ILLUSTRATIVE EMBODIMENT

FIG. **1** depicts an illustrative network audio system **10** constructed in accordance with the invention. With reference to FIG. **1**, the network audio system **10** includes a plurality of zone players **11**(**1**) through **11**(N) (generally identified by reference numeral **11**(*n*)) interconnected by a local network **12**, all of which operate under control of one or more user interface modules generally identified by reference numeral **13**. One or more of the zone players **11**(*n*) may also be connected to one or more audio information sources, which will generally be identified herein by reference numeral **14**(*n*)(*s*), and/or one or more audio reproduction devices, which will generally be identified by reference numeral **15**(*n*)(*r*). In the reference numeral **14**(*n*)(*s*), index "n" refers to the index "n" of the zone player **11**(*n*) to which the audio information source is connected, and the index "s" (s=1, . . . , S_n) refers to the "s-th" audio information source connected to that "n-th" zone player **11**(*n*). Thus, if, for example, a zone player **11**(*n*) is connected to four audio information sources **14**(*n*)(**1**) through **14**(*n*)(**4**), the audio information sources may be generally identified by reference numeral **14**(*n*)(*s*), with S_n=4. It will be appreciated that the number of audio information sources S_n may vary as among the various zone players **11**(*n*), and some zone players may not have any audio information sources connected thereto. Similarly, in the reference numeral **15**(*n*)(*r*), index "n" refers to the index "n" of the zone player **11**(*n*) to which the audio reproduction device is connected, and the index "r" (r=1, . . . , R_n) refers to the "r-th" audio information source connected to that "n-th" zone player **11**(*n*). In addition to the audio information sources **14**(*n*)(*s*), the network audio system **10** may include one or more audio information sources **16**(**1**) through **16**(M) connected through appropriate network interface devices (not separately shown) to the local network **12**. Furthermore, the local network may include one or more network interface devices (also not separately shown) that are configured to connect the local network **12** to other networks, including a wide area network such as the Internet, the public switched telephony network (PSTN) or other networks as will be apparent to those skilled in the art, over which connections to audio information sources may be established.

The zone players **11**(*n*) associated with system **10** may be distributed throughout an establishment such as residence, an office complex, a hotel, a conference hall, an amphitheater or auditorium, or other types of establishments as will be apparent to those skilled in the art or the like. For example, if the zone players **11**(*n*) and their associated audio information source(s) and/or audio reproduction device(s) are distributed throughout a residence, one, such as zone player **11**(**1**) and its associated audio information source(s) and audio reproduction device(s) may be located in a living room, another may be located in a kitchen, another may be located in a dining room, and yet others may be located in respective bedrooms, to selectively provide entertainment in those rooms. On the other hand, if the zone players **11**(*n*) and their associated audio information source(s) and/or audio reproduction device(s) are distributed throughout an office complex, one may, for example, be provided in each office to selectively provide entertainment to the employees in the respective offices. Similarly, if the zone players **11**(*n*) and associated audio information source(s) and/or audio reproduction device(s) are used in a hotel, they may be distributed throughout the rooms to provide entertainment to the guests. Similar arrangements may be used with zone players **11**(*n*) and associated audio information source(s) and/or audio reproduction device(s) used in an amphitheater or auditorium. Other arrangements in other types of environments will be apparent to those skilled in the art. In each case, the zone players **11**(*n*) can be used to selectively provide entertainment in the respective locations, as will be described below.

The audio information sources **14**(*n*)(*s*) and **16**(*m*) may be any of a number of types of conventional sources of audio information, including, for example, compact disc ("CD") players, AM and/or FM radio receivers, analog or digital tape cassette players, analog record turntables and the like. In addition, the audio information sources **14**(*n*)(*s*) and **16**(*m*) may comprise digital audio files stored locally on, for example, personal computers (PCs), personal digital assistants (PDAs), or similar devices capable of storing digital information in volatile or non-volatile form. As noted above, the local network **12** may also have an interface (not shown) to a wide area network, over which the network audio system **10** can obtain audio information. Moreover, one or more of the audio information sources **14**(*n*)(*s*) may also comprise an interface to a wide area network such as the Internet, the public switched telephony network (PSTN) or

any other source of audio information. In addition, one or more of the audio information sources **14**(*n*)(*s*) and **16**(*m*) may comprise interfaces to radio services delivered over, for example, satellite. Audio information obtained over the wide area network may comprise, for example, streaming digital audio information such as Internet radio, digital audio files stored on servers, and other types of audio information and sources as will be appreciated by those skilled in the art. Other arrangements and other types of audio information sources will be apparent to those skilled in the art.

Generally, the audio information sources **14**(*n*)(*s*) and **16**(*m*) provide audio information associated with audio programs to the zone players for playback. A zone player that receives audio information from an audio information source **14**(*n*)(*s*) that is connected thereto can provide playback and/or forward the audio information, along with playback timing information, over the local network **12** to other zone players for playback. Similarly, each audio information source **16**(*m*) that is not directly connected to a zone player can transmit audio information over the network **12** to any zone player **11**(*n*) for playback. In addition, as will be explained in detail below, the respective zone player **11**(*n*) can transmit the audio information that it receives either from an audio information source **14**(*n*)(*s*) connected thereto, or from an audio information source **16**(*m*), to selected ones of the other zone players **11**(*n*'), **11**(*n*"), . . . (n not equal to n', n", . . .) for playback by those other zone players. The other zone players **11**(*n*'), **11**(*n*"), . . . to which the zone player **11**(*n*) transmits the audio information for playback may be selected by a user using the user interface module **13**. In that operation, the zone player **11**(*n*) will transmit the audio information to the selected zone players **11**(*n*'), **11**(*n*"), . . . over the network **12**. As will be described below in greater detail, the zone players **11**(*n*), **11**(*n*'), **11**(*n*"), . . . operate such that the zone players **11**(*n*'), **11**(*n*"), . . . synchronize their playback of the audio program with the playback by the zone player **11**(*n*), so that the zone players **11**(*n*), **11**(*n*'), **11**(*n*") provide the same audio program at the same time.

Users, using user interface module **13**, may also enable different groupings or sets of zone players to provide audio playback of different audio programs synchronously. For example, a user, using a user interface module **13**, may enable zone players **11**(**1**) and **11**(**2**) to play one audio program, audio information for which may be provided by, for example, one audio information source **14**(**1**)(**1**). The same or a different user may, using the same or a different user interface module **13**, enable zone players **11**(**4**) and **11**(**5**) to contemporaneously play another audio program, audio information for which may be provided by a second audio information source, such as audio information source **14**(**5**)(**2**). Further, a user may enable zone player **11**(**3**) to contemporaneously play yet another audio program, audio information for which may be provided by yet another audio information source, such as audio information source **16**(**1**). As yet another possibility, a user may contemporaneously enable zone player **11**(**1**) to provide audio information from an audio information source connected thereto, such as audio information source **14**(**1**)(**2**), to another zone player, such as zone player **11**(**6**) for playback.

In the following, the term-"synchrony group" will be used to refer to a set of one or more zone players that are to play the same audio program synchronously. Thus, in the above example, zone players **11**(**1**) and **11**(**2**) comprise one synchrony group, zone player **11**(**3**) comprises a second synchrony group, zone players **11**(**4**) and **11**(**5**) comprise a third synchrony group, and zone player **11**(**6**) comprises yet a fourth synchrony group. Thus, while zone players **11**(**1**) and **11**(**2**) are playing the same audio program, they will play the audio program synchronously. Similarly, while zone players **11**(**4**) and **11**(**5**) are playing the same audio program, they will play the audio program synchronously. On the other hand, zone players that are playing different audio programs may do so with unrelated timings. That is, for example, the timing with which zone players **11**(**1**) and **11**(**2**) play their audio program may have no relationship to the timing with which zone player **11**(**3**), zone players **11**(**4**) and **11**(**5**), and zone player **11**(**6**) play their audio programs. It will be appreciated that, since "synchrony group" is used to refer to sets of zone players that are playing the same audio program synchronously, zone player **11**(**1**) will not be part of zone player **11**(**6**)'s synchrony group, even though zone player **11**(**1**) is providing the audio information for the audio program to zone player **11**(**6**).

In the network audio system **10**, the synchrony groups are not fixed. Users can enable them to be established and modified dynamically. Continuing with the above example, a user may enable the zone player **11**(**1**) to begin providing playback of the audio program provided thereto by audio information source **14**(**1**)(**1**), and subsequently enable zone player **11**(**2**) to join the synchrony group. Similarly, a user may enable the zone player **11**(**5**) to begin providing playback of the audio program provided thereto by audio information source **14**(**5**)(**2**), and subsequently enable zone player **11**(**4**) to join that synchrony group. In addition, a user may enable a zone player to leave a synchrony group and possibly join another synchrony group. For example, a user may enable the zone player **11**(**2**) to leave the synchrony group with zone player **11**(**1**), and join the synchrony group with zone player **11**(**6**). As another possibility, the user may enable the zone player **11**(**1**) to leave the synchrony group with zone player **11**(**2**) and join the synchrony group with zone player **11**(**6**). In connection with the last possibility, the zone player **11**(**1**) can continue providing audio information from the audio information source **14**(**1**)(**1**) to the zone player **11**(**2**) for playback thereby.

A user, using the user interface module **13**, can enable a zone player **11**(*n*) that is currently not a member of a synchrony group to join a synchrony group, after which it will be enabled to play the audio program that is currently being played by that synchrony group. Similarly, a user, also using the user interface module **13**, can enable a zone player **11**(*n*) that is currently a member of one synchrony group, to disengage from that synchrony group and join another synchrony group, after which that zone player will be playing the audio program associated with the other synchrony group. For example, if a zone player **11**(**6**) is currently not a member of any synchrony group, it, under control of the user interface module **13**, can become a member of a synchrony group, after which it will play the audio program being played by the other members of the synchrony group, in synchrony with the other members of the synchrony group. In becoming a member of the synchrony group, zone player **11**(**6**) can notify the zone player that is the master device for the synchrony group that it wishes to become a member of its synchrony group, after which that zone player will also transmit audio information associated with the audio program, as well as timing information, to the zone player **11**(**6**). As the zone player **11**(**6**) receives the audio information and the timing information from the master device, it will play the audio information with the timing indicated by the timing information, which

will enable the zone player **11**(**6**) to play the audio program in synchrony with the other zone player(s) in the synchrony group.

Similarly, if a user, using the user interface module **13**, enables a zone player **11**(*n*) associated with a synchrony group to disengage from that synchrony group, and if the zone player **11**(*n*) is not the master device of the synchrony group, the zone player **11**(*n*) can notify the master device, after which the master device can terminate transmission of the audio information and timing information to the zone player **11**(*n*). If the user also enables the zone player **11**(*n*) to begin playing another audio program using audio information from an audio information source **14**(*n*)(*s*) connected thereto, it will acquire the audio information from the audio information source **14**(*n*)(*s*) and initiate playback thereof. If the user enables another zone player **11**(*n*') to join the synchrony group associated with zone player **11**(*n*), operations in connection therewith can proceed as described immediately above.

As yet another possibility, if a user, using the user interface module **13**, enables a zone player **11**(*n*) associated with a synchrony group to disengage from that synchrony group and join another synchrony group, and if the zone player is not the master device of the synchrony group from which it is disengaging, the zone player **11**(*n*) can notify the master device of the synchrony group from which it is disengaging, after which that zone player will terminate transmission of audio information and timing information to the zone player **11**(*n*) that is disengaging. Contemporaneously, the zone player **11**(*n*) can notify the master device of the synchrony group that it (that is, zone player **11**(*n*)) is joining, after which the master device can begin transmission of audio information and timing information to that zone player **11**(*n*). The zone player **11**(*n*) can thereafter begin playback of the audio program defined by the audio information, in accordance with the timing information so that the zone player **11**(*n*) will play the audio program in synchrony with the master device.

As yet another possibility, a user, using the user interface module **13**, may enable a zone player **11**(*n*) that is not associated with a synchrony group, to begin playing an audio program using audio information provided to it by an audio information source **14**(*n*)(*s*) connected thereto. In that case, the user, also using the user interface module **13** or a user interface device that is specific to the audio information source **14**(*n*)(*s*), can enable the audio information source **14**(*n*)(*s*) to provide audio information to the zone player **11**(*n*). After the zone player **11**(*n*) has begun playback, or contemporaneously therewith, the user, using the user interface module **13**, can enable other zone players **11**(*n*'), **11**(*n*"), . . . to join zone player **11**(*n*)'s synchrony group and enable that zone player **11**(*n*) to transmit audio information and timing information thereto as described above, to facilitate synchronous playback of the audio program by the other zone players **11**(*n*'), **11**(*n*") . . . .

A user can use the user interface module **13** to control other aspects of the network audio system **10**, including but not limited to the selection of the audio information source **14**(*n*)(*s*) that a particular zone player **11**(*n*) is to utilize, the volume of the audio playback, and so forth. In addition, a user may use the user interface module **13** to turn audio information source(s) **14**(*n*)(*s*) on and off and to enable them to provide audio information to the respective zone players **11**(*n*).

Operations performed by the various devices associated with a synchrony group will be described in connection with FIG. **2**, which schematically depicts a functional block diagram of a synchrony group in the network audio system **10** described above in connection with FIG. **1**. With reference to FIG. **2**, a synchrony group **20** includes a master device **21** and zero or more slave devices **22**(**1**) through **22**(G) (generally identified by reference numeral **22**(*g*)), all of which synchronously play an audio program provided by an audio information channel device **23**. Each of the master device **21**, slave devices **22**(*g*) and audio information channel device **23** utilizes a zone player **11**(*n*) depicted in FIG. **1**, although it will be clear from the description below that a zone player may be utilized both for the audio information channel device for the synchrony group **20**, and the master device **21** or a slave device **22**(*g*) of the synchrony group **20**. As will be described below in more detail, the audio information channel device **23** obtains the audio information for the audio program from an audio information source, adds playback timing information, and transmits the combined audio and playback timing information to the master device **21** and slave devices **22**(*g*) over the network **12** for playback. The playback timing information that is provided with the audio information, together with clock timing information provided by the audio information channel device **23** to the various devices **21** and **22**(*g*) as will be described below, enables the master device **21** and slave devices **22**(*g*) of the synchrony group **20** to play the audio information simultaneously.

The master device **21** and the slave devices **22**(*g*) receive the audio and playback timing information, as well as the clock timing information, that are provided by the audio information channel device **23**, and play back the audio program defined by the audio information. The master device **21** is also the member of the synchrony group **20** that communicates with the user interface module **13** and that controls the operations of the slave devices **22**(*g*) in the synchrony group **20**. In addition, the master device **21** controls the operations of the audio information channel device **23** that provides the audio and playback timing information for the synchrony group **20**. Generally, the initial master device **21** for the synchrony group will be the first zone player **11**(*n*) that a user wishes to play an audio program. However, as will be described below, the zone player **11**(*n*) that operates as the master device **21** can be migrated from one zone player **11**(*n*) to another zone player **11**(*n*'), which preferably will be a zone player that is currently operating as a slave device **22**(*g*) in the synchrony group.

In addition, under certain circumstances, as will be described below, the zone player **11**(*n*) that operates as the audio information channel device **23** can be migrated from one zone player to another zone player, which also will preferably will be a zone player that is currently operating as a member of the synchrony group **20**. It will be appreciated that the zone player that operates as the master device **21** can be migrated to another zone player independently of the migration of the audio information channel device **23**. For example, if one zone player **11**(*n*) is operating as both the master device **21** and the audio information channel device **23** for a synchrony group **20**, the master device **21** can be migrated to another zone player **11**(*n*') while the zone player **11**(*n*) is still operating as the audio information channel device **23**. Similarly, if one zone player **11**(*n*) is operating as both the master device **21** and the audio information channel device **23** for a synchrony group **20**, the audio information channel device **23** can be migrated to another zone player **11**(*n*') while the zone player **11**(*n*) is still operating as the master device **21**. In addition, if one zone player **11**(*n*) is operating as both the master device **21** and the audio

information channel device **23** for a synchrony group **20**, the master device **21** can be migrated to another zone player **11**(*n*') and the audio information channel device can be migrated to a third zone player **11**(*n*").

The master device **21** receives control information from the user interface module **13** for controlling the synchrony group **20** and provides status information indicating the operational status of the synchrony group to the user interface module **13**. Generally, the control information from the user interface module **13** enables the master device **21** to, in turn, enable the audio information channel device **23** to provide audio and playback timing information to the synchrony group to enable the devices **21** and **22**(*g*) that are members of the synchrony group **20** to play the audio program synchronously. In addition, the control information from the user interface module **13** enables the master device **21** to, in turn, enable other zone players to join the synchrony group as slave devices **22**(*g*) and to enable slave devices **22**(*g*) to disengage from the synchrony group. Control information from the user interface module **13** can also enable the zone player **11**(*n*) that is currently operating as the master device **21** to disengage from the synchrony group, but prior to doing so that zone player will enable the master device **21** to transfer from that zone player **11**(*n*) to another zone player **11**(*n*'), preferably to a zone player **11**(*n*') that is currently a slave device **22**(*g*) in the synchrony group **20**. The control information from the user interface module **13** can also enable the master device **21** to adjust its playback volume and to enable individual ones of the various slave devices **22**(*g*) to adjust their playback volumes. In addition, the control information from the user interface module **13** can enable the synchrony group **20** to terminate playing of a current track of the audio program and skip to the next track, and to re-order tracks in a play list of tracks defining the audio program that is to be played by the synchrony group **20**.

The status information that the master device **21** may provide to the user interface module **13** can include such information as a name or other identifier for the track of the audio work that is currently being played, the names or other identifiers for upcoming tracks, the identifier of the zone player **11**(*n*) that is currently operating as the master device **21**, and identifiers of the zone players that are currently operating as slave devices **22**(*g*). In one embodiment, the user interface module **13** includes a display (not separately shown) that can display the status information to the user.

It will be appreciated that the zone player **11**(*n*) that is operating as the audio information channel device **23** for one synchrony group may also comprise the master device **21** or any of the slave devices **22**(*g*) in another synchrony group. This may occur if, for example, the audio information source that is to provide the audio information that is to be played by the one synchrony group is connected to a zone player also being utilized as the master device or a slave device for the other synchrony group. This will be schematically illustrated below in connection with FIG. **2**A. Since, as noted above, the zone player **11**(*n*) that is operating as the audio information channel device **23** for the synchrony group **20** may also be operating as a master device **21** or slave device **22**(*g*) for another synchrony group, it can also be connected to one or more audio reproduction devices **15**(*n*)(*r*), although that is not depicted in FIG. **2**. Since the master device **21** and slave devices **22**(*g*) are all to provide playback of the audio program, they will be connected to respective audio reproduction devices **15**(*n*)(*r*). Furthermore, it will be appreciated that one or more of the zone players **11**(*n*) that operate as the master device **21** and slave devices **22**(*g*) in synchrony group **20** may also operate as an audio information channel device for that synchrony group or for another synchrony group and so they may be connected to one or more audio information sources **14**(*n*)(*s*), although that is also not depicted in FIG. **2**. In addition, it will be appreciated that a zone player **11**(*n*) can also operate as a audio information channel device **23** for multiple synchrony groups.

If the audio information channel device **23** does not utilize the same zone player as the master device **21**, the master device **21** controls the audio information channel device by exchanging control information over the network **12** with the audio information channel device **23**. The control information is represented in FIG. **2** by the arrow labeled CHAN_DEV_CTRL_INFO. The control information that the master device **21** provides to the audio information channel device **23** will generally depend on the nature of the audio information source that is to provide the audio information for the audio program that is to be played and the operation to be enabled by the control information. If, for example, the audio information source is a conventional compact disc, tape, or record player, broadcast radio receiver, or the like, which is connected to a zone player **11**(*n*), the master device **21** may merely enable the zone player serving as the audio information channel device **23** to receive the audio information for the program from the audio information source. It will be appreciated that, if the audio information is not in digital form, the audio information channel device **23** will convert it to digital form and provide the digitized audio information, along with the playback timing information, to the master device **21** and slave devices **22**(*g*).

On the other hand, if the audio information source is, for example, a digital data storage device, such as may be on a personal computer or similar device, the master device **21** can provide a play list to the audio information channel device **23** that identifies one or more files containing the audio information for the audio program. In that case, the audio information channel device **23** can retrieve the files from the digital data storage device and provide them, along with the playback timing information, to the master device **21** and the slave devices **22**(*g*). It will be appreciated that, in this case, the audio information source may be directly connected to the audio information channel device **23**, as, for example, an audio information source **14**(*n*)(*s*), or it may comprise an audio information source **16**(*m*) connected to the network **12**. As a further alternative, if the audio information source is a source available over the wide area network, the master device **21** can provide a play list comprising a list of web addresses identifying the files containing the audio information for the audio program that is to be played, and in that connection the audio information channel device **23** can initiate a retrieval of the files over the wide area network. As yet another alternative, if the audio information source is a source of streaming audio received over the wide area network, the master device **21** can provide a network address from which the streaming audio can be received. Other arrangements by which the master device **21** can control the audio information channel device **23** will be apparent to those skilled in the art.

The master device **21** can also provide control information to the synchrony group's audio information channel device **23** to enable a migration from one zone player **11**(*n*) to another zone player **11**(*n*'). This may occur if, for example, the audio information source is one of audio information sources **16** or a source accessible over the wide area network via the network **12**. The master device **21** can enable migration of the audio information channel device **23**

for several reasons, including, for example, to reduce the loading of the zone player **11**(*n*), to improve latency of message transmission in the network **12**, and other reasons as will be appreciated by those skilled in the art.

As noted above, the audio information channel device **23** provides audio and playback timing information for the synchrony group to enable the master device **21** and slave devices **22**(*g*) to play the audio program synchronously. Details of the audio and playback timing information will be described in detail below in connection with FIGS. **3** and **4**, but, in brief, the audio information channel device **23** transmits the audio and playback timing information in messages over the network **12** using a multi-cast message transmission methodology. In that methodology, the audio information channel device **23** will transmit the audio and playback timing information in a series of messages, with each message being received by all of the zone players **11**(*n*) comprising the synchrony group **20**, that is, by the master device **21** and the slave devices **22**(*g*). Each of the messages includes a multi-cast address, which the master device **21** and slave devices **22**(*g*) will monitor and, when they detect a message with that address, they will receive and use the contents of the message. The audio and playback timing information is represented in FIG. **2** by the arrow labeled "AUD+PBTIME_INF0," which has a single tail, representing a source for the information at the audio information channel device **23**, and multiple arrowheads representing the destinations of the information, with one arrowhead extending to the master device **21** and other arrowheads extending to each of the slave devices **22**(*g*) in the synchrony group **20**. The audio information channel device **23** may make use of any convenient multi-cast message transmission methodology in transmitting the audio and playback timing information to the synchrony group **20**. As will be described in detail in connection with FIG. **4**, the audio and playback timing information is in the form of a series of frames, with each frame having a time stamp. The time stamp indicates a time, relative to the time indicated by a clock maintained by the audio information channel device **23**, at which the frame is to be played. Depending on the size or sizes of the messages used in the selected multi-cast message transmission methodology and the size or sizes of the frames, a message may contain one frame, or multiple frames, or, alternatively, a frame may extend across several messages.

The audio information channel device **23** also provides clock time information to the master device **21** and each of the slave devices **22**(*g*) individually over network **12** using a highly accurate clock time information transmission methodology. The distribution of the clock time information is represented in FIG. **2** by the arrows labeled "AICD_CLK_INF (M)" (in the case of the clock time information provided to the master device **21**) and "AICD_CLK_INF (S_1)" through "AICD_CLK_INF (S_G)" (in the case of audio information channel device clock information provided to the slave devices **22**(*g*)). In one embodiment, the master device **21** and slave devices **22**(*g*) make use of the well-known SNTP (Simple Network Time Protocol) to obtain current clock time information from the audio information channel device **23**. The SNTP makes use of a unicast message transfer methodology, in which one device, such as the audio information channel device **23**, provides clock time information to a specific other device, such as the master device **21** or a slave device **22**(*g*), using the other device's network, or unicast, address. Each of the master device **21** and slave devices **22**(*g*) will periodically initiate SNTP transactions with the audio information channel device **23** to obtain the clock time information from the audio information channel device **23**. As will be described below in more detail, the master device **21** and each slave device **22**(*g*) make use of the clock time information to determine the time differential between the time indicated by the audio information channel device's clock and the time indicated by its respective clock, and use that time differential value, along with the playback time information associated with the audio information and the respective device's local time as indicated by its clock to determine when the various frames are to be played. This enables the master device **21** and the slave devices **22**(*g*) in the synchrony group **20** to play the respective frames simultaneously.

As noted above, the control information provided by the user to the master device **21** through the user interface module **13** can also enable the master device **21** to, in turn, enable another zone player **11**(*n'*) to join the synchrony group as a new slave device **22**(*g*). In that operation, the user interface module **13** will provide control information, including the identification of the zone player **11**(*n'*) that is to join the synchrony group to the master device **21**. After it receives the identification of the zone player **11**(*n'*) that is to join the synchrony group, the master device **21** will exchange control information, which is represented in FIG. **2** by the arrows labeled SLV_DEV_CTRL_INF (S_1) through SLV_DEV_CTRL_INF (S_G) group slave control information, over the network **12** with the zone player **11**(*n'*) that is identified in the control information from the user interface module **13**. The control information that the master device **21** provides to the new zone player **11**(*n'*) includes the network address of the zone player **11**(*n*) that is operating as the audio information channel device **23** for the synchrony group, as well as the multi-cast address that the audio information channel device **23** is using to broadcast the audio and playback timing information over the network. The zone player that is to operate as the new slave device **22**(*g'*) uses the multi-cast address to begin receiving the multi-cast messages that contain the audio information for the audio program being played by the synchrony group.

It will be appreciated that, if the zone player **11**(*n*) that is operating as the master device **21** for the synchrony group **20** is also operating the audio information channel device **23**, and if there are no slave devices **22**(*g*) in the synchrony group **20**, the audio information channel device **23** may not be transmitting audio and playback timing information over the network. In that case, if the new slave device **22**(*g'*) is the first slave device in the synchrony group, the zone player **11**(*n*) that is operating as both the master device **21** and audio information channel device **23**, can begin transmitting the audio and playback timing information over the network **12** when the slave device **22**(*g'*) is added to the synchrony group **20**. The zone player **11**(*n*) can maintain a count of the number of slave devices **22**(*g*) in the synchrony group **20** as they join and disengage, and, if the number drops to zero, it can stop transmitting the audio and playback timing information over the network **12** to reduce the message traffic over the network **12**.

The new slave device **22**(*g'*) added to the synchrony group **20** uses the network address of the audio information channel device **23** for several purposes. In particular, the new slave device **22**(*g'*) will, like the master device **21** (assuming the zone player **11**(*n*) operating as the master device **21** is not also the audio information channel device **23**), engage in SNTP transactions with the audio information channel device **23** to obtain the clock timing information from the audio information channel device **23**. In addition, the new slave device **22**(*g'*) can notify the audio information

channel device **23** that it is a new slave device **22**(*g'*) for the synchrony group **20** and provide the audio information channel device **23** with its network address. As will be described below, in one embodiment, particularly in connection with audio information obtained from a source, such as a digital data storage device, which can provide audio information at a rate that is faster than the rate at which it will be played, the audio information channel device **23** will buffer audio and timing information and broadcast it over the network **12** to the synchrony group **20** generally at a rate at which it is provided by the source. Accordingly, when a new slave device **22**(*g'*) joins the synchrony group **20**, the playback timing information may indicate that the audio information that is currently being broadcast by the audio information channel device **23** using the multi-cast methodology is to be played back some time in the future. To reduce the delay with which the new slave device **22**(*g'*) will begin playback, the audio information channel device **23** can also retransmit previously transmitted audio and timing information that it had buffered to the new slave device **22**(*g'*) using the unicast network address of the slave device **22**(*g'*).

The master device **21** can also use the slave device control information exchanged with the slave devices **22**(*g*) for other purposes. For example, the master device **21** can use the slave device control information to initiate a migration of the master from its zone player **11**(*n*) to another zone player **11**(*n'*). This may occur for any of a number of reasons, including, for example, that the master device **21** is terminating playback by it of the audio program and is leaving the synchrony group **20**, but one or more of the other devices in the synchrony group is to continue playing the audio program. The master device **21** may also want to initiate a migration if it is overloaded, which can occur if, for example, the zone player **11**(*n*) that is the master device **21** for its synchrony group is also operating as an audio information channel device **23** for another synchrony group.

The user can also use the user interface module **13** to adjust playback volume by the individual zone players **11**(*n*) comprising the synchrony group. In that operation, the user interface module **13** provides information identifying the particular device whose volume is to be adjusted, and the level at which the volume is to be set to the master device **21**. If the device whose volume is to be adjusted is the master device **21**, the master device **21** can adjust its volume according to the information that it receives from the user interface module **13**. On the other hand, if the device whose volume is to be adjusted is a slave device **22**(*g*), the master device **21** can provide group slave control information to the respective slave device **22**(*g*), to enable it to adjust its volume.

The user can also use the user interface module **13** to enable a synchrony group **20** to cancel playing of the track in an audio program that is currently being played, and to proceed immediately to the next track. This may occur, for example, if the tracks for the program is in the form of a series of digital audio information files, and the user wishes to cancel playback of the track that is defined by one of the files. In that case, when the master device **21** receives the command to cancel playback of the current track, it will provide channel device control information to the audio information channel device **23** so indicating. In response, the audio information channel device **23** inserts control information into the audio and playback timing information, which will be referred to as a "resynchronize" command. In addition, the audio information channel device **23** will begin transmitting audio information for the next track, with timing information to enable it to be played immediately. The resynchronize command can also enable playback of a track to be cancelled before it has been played. Details of these operations will be described below.

As noted above, there may be multiple synchrony groups in the network audio system **10**, and further that, for example, a zone player **11**(*n*) may operate both as a master device **21** or a slave device **22**(*g*) in one synchrony group, and as the audio information channel device **23** providing audio and playback timing information and clock timing information for another synchrony group. An illustrative arrangement of this will be described in connection with FIG. **2**A. With reference to FIG. **2**A, that FIG. depicts elements of two synchrony groups, identified by reference numerals **20**(**1**) and **20**(**2**), respectively. For clarity, FIG. **2**A does not show a number of elements, the presence of which would be evident from FIGS. **1** and **2** as described above. For example, FIG. **2**A does not depict the audio information sources from which audio information is obtained for the synchrony groups or the audio reproduction devices that are used to produce sound for the master and slave devices, which are depicted in both FIGS. **1** and **2**. In addition, FIG. **2**A does not depict arrows that represent control information provided by the respective master devices to the slave devices in the respective synchrony groups, or to the audio information channel devices that provide audio and timing information for the respective synchrony groups, which are depicted in FIG. **2**. In addition, FIG. **2**A does not depict the arrows that represent the clock timing information provided by the audio information channel devices to the respective members of the respective synchrony groups, which are also depicted in FIG. **2**. As will be noted below, however, FIG. **2**A does depict arrows representing the audio and playback timing information provided by the respective audio information channel devices for the respective synchrony groups **20**(**1**), **20**(**2**), to the master and slave devices comprising the respective synchrony groups **20**(**1**), **20**(**2**).

Each synchrony group **20**(**1**), **20**(**2**) comprises elements of a number of zone players. A functional block diagram of a zone player will be described below in connection with FIG. **3**. Synchrony group **20**(**1**) includes a master device **21**(**1**) and "K" slave devices **22**(**1**)(**1**) through **22**(K)(**1**) (the index "1" in reference numeral **21**(**1**) and the last index in reference numeral **22**(**1**)(**1**) through **21**(K)(**1**) corresponds to the index of the synchrony group **20**(**1**) to which they belong) utilize zone players **11**(**1**) and **11**(K+1) respectively. Similarly, synchrony group **20**(**2**) includes a master device **21**(**2**) and "L" slave devices **22**(**1**)(**2**) through **22**(L)(**2**) that utilize zone players **11**(K+2) through **11**(K+L+2). In the illustrative arrangement depicted in FIG. **2**A, both synchrony groups **20**(**1**) and **20**(**2**) are controlled by the user interface module **13**, which can provide control information to, and receive status information from, the master devices **21**(**1**) and **21**(**2**) independently. It will be appreciated that separate user interface modules may be provided to provide control information to, and receive status information from, the respective master devices **21**(**1**), **21**(**2**).

As noted above, the slave device **22**(**1**)(**2**) in synchrony group **20**(**2**) utilizes zone player **11**(K+3). In the illustrative arrangement depicted in FIG. **2**A, the audio information channel device **23**(**1**) that provides audio and playback timing information to the master and slave devices **21**(**1**), **22**(**1**)(**1**), . . . , **22**(K)(**1**) of synchrony group **20**(**1**) also utilizes zone player **11**(K+3). As noted above, this may occur if, for example, the audio information source that is to provide audio information to be played by the synchrony group **20**(**1**) is connected to the zone player **11**(K+3). Thus, when the master device **21**(**1**) of synchrony group **20**(**1**)

exchanges channel device control information with the audio information channel device **23**(**1**), it is effectively exchanging channel device control information with the zone player **11**(K+3). Similarly, when the master and slave devices **21**(**1**), **22**(**1**)(**1**), . . . , **22**(K)(**1**) of synchrony group **20**(**1**) receive audio and playback timing information, as well as clock timing information, from the audio information channel device **23**(**1**), they are effectively receiving the information from the zone player **11**(K+3). FIG. **2**A depicts a multi-headed arrow representing audio and playback timing information transmitted by the zone player **11**(K+3), as audio information channel device **23**(**1**), to the master and slave devices **21**(**1**), **22**(**1**)(**1**), . . . , **11**(K)(**1**) comprising synchrony group **20**(**1**).

On the other hand, in the illustrative arrangement depicted in FIG. **2**A, the synchrony group **20**(**2**) utilizes a zone player **11**(K+L+3) as its audio information channel device **23**(**2**). As with synchrony group **20**(**1**), when the master device **21**(**2**) of synchrony group **20**(**2**) exchanges channel device control information with the audio information channel device **23**(**2**), it is effectively exchanging channel device control information with the zone player **11**(K+L+3). Similarly, when the master and slave devices **21**(**2**), **22**(**1**)(**2**), . . . , **22**(L)(**2**) of synchrony group **20**(**2**) receive audio and playback timing information, as well as clock timing information, from the audio information channel device **23**(**2**), they are effectively receiving the information from the zone player **11**(K+L+3). FIG. **2**A depicts a multi-headed arrow representing audio and playback timing information transmitted by the zone player **11**(K+3) as audio information channel device **23**(**2**) to the master and slave devices **21**(**2**), **22**(**1**)(**2**), . . . , **22**(L)(**2**) comprising synchrony group **20**(**2**).

In the illustrative arrangement depicted in FIG. **2**A, zone player **11**(K+L+3), which is the audio information channel device **23**(**2**) for synchrony group **20**(**2**), is not shown as being either a master or a slave device in another synchrony group. However, it will be appreciated that zone player **11**(K+L+3) could also be utilized as the master device or a slave device for another synchrony group. Indeed, it will be appreciated that the zone player that is utilized as the audio information channel device for synchrony group **20**(**2**) may also be a zone player that is utilized as the master device **21**(**1**) or a slave device **22**(**1**)(**1**), . . . , **22**(K)(**1**) in the synchrony group **20**(**1**).

A zone player **11**(*n*) that is utilized as a member of one synchrony group may also be utilized as the audio information channel device for another synchrony group if the audio information source that is to supply the audio information that is to be played by the other synchrony group is connected to that zone player **11**(*n*). A zone player **11**(*n*) may also be utilized as the audio information channel device for the other synchrony group if, for example, the audio information source is an audio information source **16**(*m*) (FIG. **1**) that is connected to the network **12** or an audio information source that is available over a wide area network such as the Internet. The latter may occur if, for example, the zone player **11**(*n*) has sufficient processing power to operate as the audio information channel device and it is in an optimal location in the network **12**, relative to the zone players comprising the other synchrony group (that is the synchrony group for which it is operating as audio information channel device) for providing the audio and playback timing information to the members of the other synchrony group. Other circumstances under which the zone player **11**(*n*) that is utilized as a member of one synchrony group may also be utilized as the audio information channel device for another synchrony group will be apparent to those skilled in the art.

As was noted above, the master device **21** for a synchrony group **20** may be migrated from one zone player **11**(*n*) to another zone player **11**(*n*'). As was further noted above, the audio information channel device **23** for a synchrony group **20** may be migrated from one zone player **11**(*n*) to another zone player **11**(*n*'). It will be appreciated that the latter may occur if, for example, the audio information source that provides the audio program for the synchrony group is not connected to the zone player **11**(*n*) that is operating as the audio information channel device **23**, but instead is one of the audio information sources **16**(*m*) connected to the network **12** or a source available over a wide area network such as the Internet. Operations performed during a migration of an audio information channel device **23** from one zone player **11**(*n*) to another zone player **11**(*n*') will generally depend on the nature of the audio information that is being channeled by the audio information channel device **23**. For example, if the audio information source provides streaming audio, the zone player **11**(*n*) that is currently operating as the audio information channel device **23** for the synchrony group **20**, can provide the following information to the other zone player **11**(*n*') that is to become the audio information channel device **23** for the synchrony group **20**:

(a) the identification of the source of the streaming audio information,

(b) the time stamp associated with the frame that the zone player **11**(*n*) is currently forming, and

(c) the identifications of the zone players that are operating as the master device **21** and slave devices **22**(*g*) comprising the synchrony group **20**.

After the zone player **11**(*n*') receives the information from the zone player **11**(*n*), it will begin receiving the streaming audio from the streaming audio information source identified by the zone player **11**(*n*), assemble the streaming audio information into frames, associate each frame with a time stamp, and transmit the resulting audio and playback timing information over the network **12**. The zone player **11**(*n*') will perform these operations in the same manner as described above, except that, instead of using the time indicated by its digital to analog converter clock **34** directly in generating the time stamps for the frames, the initial time stamp will be related to the value of the time stamp that is provided by the zone player **11**(*n*) (reference item (b) above), with the rate at which the time stamps are incremented corresponding to the rate at which its (that is, the zone player **11**(*n*')'s) clock increments. In addition, the zone player **11**(*n*') will notify the zone players that are operating as the master device **21** and slave devices **22**(*g*) of the synchrony group **20** that it is the new audio information channel device **23** for the synchrony group **20**, and provide the multi-cast address that it will be using to multi-cast the audio and playback timing information, as well as its unicast network address. After the members of the synchrony group **20** receive the notification from the zone player **11**(*n*') indicating that it is the new audio information channel device **23** for the synchrony group **20**, they will receive the audio and playback timing information from the zone player **11**(*n*') instead of the zone player **11**(*n*), using the multi-cast address provided by the zone player **11**(*n*'). In addition, they can utilize the zone player **11**(*n*')'s unicast network address to obtain current time information therefrom. It will be appreciated that the zone player **11**(*n*') will determine its current time in relation to the time stamp that is provided by the zone player **11**(*n*) (reference item (b) above) or the current time information that it received from the zone player **11**(*n*) using the SNTP protocol as described above.

Generally similar operations can be performed in connection with migrating the audio information channel device from one zone player **11**(*n*) to another zone player **11**(*n*') if the audio information is from one or more audio information files, such as may be the case if the audio information comprises MP3 or WAV files that are available from sources such as sources **16**(*m*) connected to the network **12** or over from sources available over a wide area network such as the Internet, except for differences to accommodate the fact that the audio information is in files. In that case, the zone player **11**(*n*) that is currently operating as the audio information channel device **23** for the synchrony group **20** can provide the following information to the zone player **11**(*n*') that is to become the audio information channel device **23** for the synchrony group **20**:

(d) a list of the audio information files containing the audio information that is to be played;

(e) the identification of the file for which the zone player **11**(*n*) is currently providing audio and playback timing information, along with the offset into the file for which the current item of audio and playback timing information is being generated and the time stamp that the zone player **11**(*n*) is associating with that frame, and

(f) the identifications of the zone players that comprise the master device **21** and slave devices **22**(*g*) comprising the synchrony group **20**.

After the zone player **11**(*n*') receives the information from the zone player **11**(*n*), it will begin retrieving audio information from the file identified in item (e), starting at the identified offset. In addition, the zone player **11**(*n*') can assemble the retrieved audio information into frames, associate each frame with a time stamp and transmit the resulting audio and playback timing information over the network **12**. The zone player **11**(*n*') will perform these operations in the same manner as described above, except that, instead of using the time indicated by its digital to analog converter clock **34** directly in generating the time stamps for the frames, the value of the initial time stamp will be related to the time stamp that is provided by the zone player **11**(*n*) (reference item (e) above), with the rate at which the time stamps are incremented corresponding to the rate at which its (that is, the zone player **11**(*n*')'s) clock increments. In addition, the zone player **11**(*n*') will notify the zone players that are operating as the master device **21** and slave devices **22**(*g*) of the synchrony group **20** that it is the new audio information channel device **23** for the synchrony group **20**, and provide the multi-cast address that it will be using to multi-cast the audio and playback timing information, as well as its unicast network address. After the members of the synchrony group **20** receive the notification from the zone player **11**(*n*') indicating that it is the new audio information channel device **23** for the synchrony group **20**, they will receive the audio and playback timing information from the zone player **11**(*n*') instead of the zone player **11**(*n*), using the multi-cast address provided by the zone player **11**(*n*'). In addition, they can utilize the zone player **11**(*n*')'s unicast network address to obtain current time information therefrom. It will be appreciated that the zone player **11**(*n*') will determine its current time in relation to the time stamp that is provided by the zone player **11**(*n*) (reference item (b) above) or the current time information that it received from the zone player **11**(*n*) using the SNTP protocol as described above. The zone player **11**(*n*') will process successive audio information files in the list that it receives from the zone player **11**(*n*) (reference item (d)).

Operations performed by the zone players **11**(*n*) and **11**(*n*') in connection with migration of the audio information channel device **23** for other types of audio information will be apparent to those skilled in the art. In any case, preferably, the zone player **11**(*n*) will continue operating as an audio information channel device **23** for the synchrony group **20** for at least a brief time after it notifies the zone player **11**(*n*') that it is to become audio information channel device for the synchrony group, so that the zone player **11**(*n*') will have time to notify the zone players in the synchrony group **20** that it is the new audio information channel device **23** for the synchrony group.

Before proceeding further in describing operations performed by the network audio system **10**, it would be helpful to provide a detailed description of a zone player **11**(*n*) constructed in accordance with the invention. FIG. **3** depicts a functional block diagram of a zone player **11**(*n*) constructed in accordance with the invention. All of the zone players in the network audio system **10** may have similar construction. With reference to FIG. **3**, the zone player **11**(*n*) includes an audio information source interface **30**, an audio information buffer **31**, a playback scheduler **32**, a digital to analog converter **33**, an audio amplifier **35**, an audio reproduction device interface **36**, a network communications manager **40**, and a network interface **41**, all of which operate under the control of a control module **42**. The zone player **11**(*n*) also has a device clock **43** that provides timing signals that control the general operations of the zone player **11**(*n*). In addition, the zone player **11**(*n*) includes a user interface module interface **44** that can receive control signals from the user interface module **13** (FIGS. **1** and **2**) for controlling operations of the zone player **11**(*n*), and provide status information to the user interface module **13**.

Generally, the audio information buffer **31** buffers audio information, in digital form, along with playback timing information. If the zone player **11**(*n*) is operating as the audio information channel device **23** (FIG. **2**) for a synchrony group **20**, the information that is buffered in the audio information buffer **31** will include the audio and playback timing information that will be provided to the devices **21** and **22**(*g*) in the synchrony group **20**. If the zone player **11**(*n*) is operating as the master device **21** or a slave device **22**(*g*) for a synchrony group, the information that is buffered in the audio information buffer **31** will include the audio and playback timing information that the zone player **11**(*n*) is to play.

The audio information buffer **31** can receive audio and playback timing information from two sources, namely, the audio information source interface **30** and the network communications manager **40**. In particular, if the zone player **11**(*n*) is operating as the audio information channel device **23** for a synchrony group **20**, and if the audio information source is a source **14**(*n*)(*s*) connected to the zone player **11**(*n*), the audio information buffer **31** will receive and buffer audio and playback timing information from the audio information source interface **30**. On the other hand, if the zone player **11**(*n*) is operating as the audio information channel device **23** for a synchrony group **20**, and if the audio information source is a source **16**(*m*) connected to the network **12**, or a source available over the wide area network, the audio information buffer **31** will receive and buffer audio and playback timing information from the network communications manager **40**. It will be appreciated that, if the zone player **11**(*n*) is not a member of the synchrony group, the zone player **11**(*n*) will not play this buffered audio and playback timing information.

On yet another hand, if the zone player **11**(*n*) is operating as the master device **21** or a slave device **22**(*g*) in a synchrony group, and if the zone player **11**(*n*) is not also the

audio information channel device **23** providing audio and playback timing information for the synchrony group **20**, the audio information buffer **31** will receive and buffer audio and playback timing information from the network communications manager **40**.

The audio information source interface **30** connects to the audio information source(s) **14**(*n*)(*s*) associated with the zone player **11**(*n*). While the zone player **11**(*n*) is operating as audio information channel device **23** for a synchrony group **20**, and if the audio information is to be provided by a source **14**(*n*)(*s*) connected to the zone player **11**(*n*), the audio information source interface **30** will selectively receive audio information from one of the audio information source(s) **14**(*n*)(*s*) to which the zone player is connected and store the audio information in the audio information buffer **21**. If the audio information from the selected audio information source **14**(*n*)(*s*) is in analog form, the audio information source interface **30** will convert it to digital form. The selection of the audio information source **14**(*n*)(*s*) from which the audio information source interface **30** receives audio information is under control of the control module **42**, which, in turn, receives control information from the user interface module through the user interface module interface **44**. The audio information source interface **30** adds playback timing information to the digital audio information and buffers the combined audio and playback timing information in the audio information buffer **21**.

More specifically, as noted above, the audio information source interface **30** receives audio information from an audio information source **14**(*n*)(*s*), converts it to digital form if necessary, and buffers it along with playback timing information in the audio information buffer **21**. In addition, the audio information source interface **30** will also provide formatting and scheduling information for the digital audio information, whether as received from the selected audio information source **14**(*n*)(*s*) or as converted from an analog audio information source. As will be made clear below, the formatting and scheduling information will control not only playback by the zone player **11**(*n*) itself, but will also enable other zone players **11**(*n*'), **11**(*n*"), . . . that may be in a synchrony group for which the zone player **11**(*n*) is the master device, to play the audio program associated with the audio information in synchrony with the zone player **11**(*n*).

In one particular embodiment, the audio information source interface **30** divides the audio information associated with an audio work into a series of frames, with each frame comprising digital audio information for a predetermined period of time. As used herein, an audio track may comprise any unit of audio information that is to be played without interruption. On the other hand, an audio program may comprise a series of one or more audio tracks that are to be played in succession. It will be appreciated that the tracks comprising the audio program may also be played without interruption, or alternatively playback between tracks may be interrupted by a selected time interval. FIG. **4** schematically depicts an illustrative framing strategy used in connection with one embodiment of the invention for a digital audio stream comprising an audio work. More specifically, FIG. **4** depicts a framed digital audio stream **50** comprising a sequence of frames **51**(**1**) through **51**(F) (generally identified by reference numeral **51**(*f*)). Each frame **51**(*f*), in turn, comprises a series of audio samples **52**(*f*)(**1**) through **52**(*f*)(S) (generally identified by reference numeral **52**(*f*)(*s*)) of the audio track. Preferably all of the frames will have the same number "S" of audio samples, although it will be appreciated from the following that that is primarily for convenience. On the other hand, it will be appreciated that, the number of audio samples may differ from "S"; this may particularly be the case if the frame **51**(*f*) contains the last audio samples for the digital audio stream for a particular audio work. In that case, the last frame **51**(F) will preferably contain samples **52**(F)(**1**) through **52**(F)(x), where "x" is less than "S." Generally, it is desirable that the number of samples be consistent among all frames **51**(*f*), and in that case padding, which will not be played, can be added to the last frame **51**(F).

Associated with each frame **51**(*f*) is a header **55**(*f*) that includes a number of fields for storing other information that is useful in controlling playback of the audio samples in the respective frame **51**(*f*). In particular, the header **55**(*f*) associated with a frame **51**(*f*) includes a frame sequence number field **56**, an encoding type field **57**, a sampling rate information field **58**, a time stamp field **60**, an end of track flag **61**, and a length flag field **62**. The header **55**(*f*) may also include fields (not shown) for storing other information that is useful in controlling playback. Generally, the frame sequence number field **56** receives a sequence number "f" that identifies the relative position of the frame **51**(*f*) in the sequence of frames **51**(**1**) . . . **51**(*f*) . . . **51**(F) containing the digital audio stream **50**. The encoding type field **57** receives a value that identifies the type of encoding and/or compression that has been used in generating the digital audio stream. Conventional encoding or compression schemes include, for example, the well-known MP3 and WAV encoding and/or compression schemes, although it will be appreciated that other schemes may be provided for as well. The sampling rate information field **58** receives sampling rate information that indicates the sampling rate for the audio samples **52**(*f*)(*s*). As will be apparent to those skilled in the art, the sampling rate determines the rate at which the zone player **11**(*n*) is to play the audio samples **52**(*f*)(*s*) in the frame, and, as will be described below, determines the period of the digital to analog converter clock **34**.

The condition of the end of work flag **61** indicates whether the frame **51**(*f*) contains the last digital audio samples for the audio track associated with the framed digital audio work **50**. If the frame **51**(*f*) does not contain the audio samples that are associated with the end of the digital audio stream **50** for a respective audio work, the end of work flag will be clear. On the other hand, if the frame **51**(*f*) does contain the audio samples that are associated with the end of the digital audio stream **50** for a respective audio work, the end of work flag **61** will be set. In addition, since the number of valid audio samples **52**(F)(s) in the frame **51**(F), that is, the samples that are not padding, may be less than "S," the default number of audio samples in a frame **51**(*f*), the length flag field **62** will contain a value that identifies the number of audio samples in **52**(F)(s) in the last frame **51**(F) of the audio work **50**. If, as noted above, the frames have a consistent number "S" of samples, the samples **52**(F)(x+1) through **52**(F)(S) will contain padding, which will not be played.

The time stamp field **60** stores a time stamp that identifies the time at which the zone player **11**(*n*) is to play the respective frame. More specifically, for each frame of a framed digital audio stream **50** that is buffered in the audio information buffer **21**, the audio information source interface **30**, using timing information from the digital to analog converter clock **34**, will determine a time at which the zone player **11**(*n*) is to play the respective frame, and stores a time stamp identifying the playback time in the time stamp field **60**. The time stamp associated with each frame will later be used by the playback scheduler **32** to determine when the portion of the digital audio stream stored in the frame is to be coupled to the digital to analog converter **33** to initiate

play back. It will be appreciated that the time stamps that are associated with frames in sequential frames **51**(**1**), **51**(**2**), . . . , **51**(F), will be such that they will be played back in order, and without an interruption between the sequential frames comprising the digital audio stream **50**. It will further be appreciated that, after a time stamp has been determined for the first frame, stored in frame **51**(**1**), of a digital audio stream **50**, the audio information source interface **30** can determine time stamps for the subsequent frame **51**(**2**), **51**(**3**), . . . , **51**(F) in relation to the number of samples "S" in the respective frames and the sample rate. The time stamps will also preferably be such that frames will be played back after some slight time delay after they have been buffered in the audio information buffer **21**; the purpose for the time delay will be made clear below.

Returning to FIG. **3**, in addition to dividing the digital audio information into frames, the audio information source interface **30** also aggregates and/or divides the frames **51**(*f*) as necessary into packets, each of which will be of a length that would fit into a message for transmission over the network, and associates each packet with a packet sequence number. For example, if a packet will accommodate multiple frames **51**(*f*), **51**(*f*+1), . . . **51**(*f*+y−1), it will aggregate them into a packet and associate them with a packet number, for example p(x). If the entire frames **51**(*f*) and **51**(*f*+y−1) was accommodated in packet p(x), where "x" is the sequence number, which will occur if the size of a packet is an exact multiple of the frame size, the next packet, p(x+1) will begin with frame **51**(*f*+y) and will include frames **51**(*f*+y), . . . , **51**(*f*+2y−1). Subsequent packets p(x+2), . . . will be formed in a similar manner. On the other hand, if the packet length will not accommodate an exact multiple of the frame size, the last frame in the packet will be continued at the beginning of the next packet.

If the audio information source interface **30** is aware of track boundaries, which may be the case if the tracks are divided into files, the packets will reflect the track boundaries, that is, the packets will not contain frames from two tracks. Thus, if the last frames associated with a track are insufficient to fill a packet, the packet will contain padding from the last frame associated with the track to the end of the packet, and the next packet will begin with the first frames associated with the next track.

In one embodiment, the audio information source interface **30** stores the packets in the audio information buffer **31** in a ring buffer. As is conventional, a ring buffer includes a series of storage locations in the buffer. Each entry will be sufficient to store one packet. Four pointers are used in connection with the ring buffer, a first pointer pointing to the beginning of the ring buffer, a second pointer pointing to the end of the ring buffer, an third "write" pointer pointing to the entry into which a packet will be written and a fourth "read" pointer pointing to the entry from which packet will be read for use in playback. When a packet is read from the ring buffer for playback, it will be read from the entry pointed to by the read pointer. After the packet has been read, the read pointer will be advanced. If the read pointer points beyond the end of the ring buffer, as indicated by the end pointer, it will be reset to point to the entry pointed to by the beginning pointer, and the operations can be repeated.

On the other hand, when the audio information source interface **30** stores a packet in the ring buffer, first determine whether the entry pointed to by the write pointer points to the same entry as the entry pointed to by the read pointer. If the write pointer points to the same entry as the entry pointed to by the read pointer, the entry contains at least a portion of a packet that has not yet been read for playback, and the audio information source interface **30** will delay storage of the packet until the entire packet has been read and the read pointer advanced. After the read pointer has been advanced, the audio information source interface **30** can store the packet in the entry pointed to by the write pointer. After the packet has been stored, the audio information source interface **30** will advance the write pointer. If the write pointer points beyond the end of the ring buffer, as indicated by the end pointer, it will be reset to point to the entry pointed to by the beginning pointer, and the operations can be repeated.

As noted above, the zone player **11**(*n*) can operate both as an audio information channel device **23** and a member of the synchrony group **20** of which it is a member. In that case, the audio information buffer **31** can contain one ring buffer. On the other hand, the zone player **11**(*n*) can operate as an audio information channel device **23** for one synchrony group **20**(**1**) (FIG. **2**A) and a member of another synchrony group **20**(**2**). In that case, the audio information buffer **31** would maintain two ring buffers, one for the audio and timing information associated with synchrony group **20**(**1**), and the other for the audio and timing information associated with synchrony group **20**(**2**). It will be appreciated that, in the latter case, the zone player **11**(*n*) will only use the audio and timing information that is associated with synchrony group **20**(**2**) for playback.

The playback scheduler **32** schedules playback of the audio information that is buffered in the audio information buffer **31** that is to be played by the zone player **11**(*n*). Accordingly, under control of the playback scheduler **32**, the digital audio information that is buffered in the audio information buffer **21** that is to be played by the zone player **11**(*n*) is transferred to the digital to analog converter **33** for playback. As noted above, if the zone player **11**(*n*) is operating as an audio information channel device **23** for a synchrony group **20** for which it is not a member, the playback scheduler **32** will not schedule the digital audio information that is to be played by that synchrony group **20** for playback. The playback scheduler **32** only schedules the digital audio information, if any, that is buffered in the audio information buffer **31** that is associated with a synchrony group for which the zone player **11**(*n*) is a member, whether as master device **21** or a slave device **22**(*g*).

Essentially, the playback scheduler **32** makes use of the read pointer associated with the circular buffer that contains the audio and playback timing information that is to be played by the zone player **11**(*n*). The playback scheduler **32** retrieves the packet information from the entry of the ring buffer pointed to by the read pointer, and then advances the ring pointer as described above. The playback scheduler **32** determines the boundaries of the frames in the packet and uses the time stamps in the time stamp fields **60** associated with the respective frame **51**(*f*), along with timing information provided by the zone player **11**(*n*)'s digital to analog converter clock **34**, to determine when the respective frame is to be transferred to the digital to analog converter **33**. Generally, when the time stamp associated with a buffered digital audio information frame corresponds to the current time as indicated by the digital to analog converter clock **34**, the playback scheduler **32** will enable the respective frame to be transferred to the digital to analog converter **33**.

The digital to analog converter **33**, also under control of the digital to analog converter clock **34**, converts the buffered digital audio information to analog form, and provides the analog audio information to the audio amplifier **35** for amplification. The amplified analog information, in turn, is provided to the audio reproduction devices **15**(*n*)(*r*) through the audio reproduction device interface **36**. The audio repro-

duction devices **15**(*n*)(*r*) transform the analog audio information signal to sound thereby to provide the audio program to a listener. The amount by which the audio amplifier **35** amplifies the analog signal is controlled by the control module **42**, in response to volume control information provided by the user through the user interface module **13**.

The network communications manager **40** controls network communications over the network **12**, and the network interface **41** transmits and receives message packets over the network **12**. The network communications manager **40** generates and receives messages to facilitate the transfer of the various types of information described above in connection with FIG. **2**, including the channel device control information, slave device control information, audio and playback timing information and the audio information channel device's clock timing information. In connection with the channel device control information and the slave device control information, the network communications manager **40** will generate messages for transfer over the network **12** in response to control information from the control module **42**. Similarly, when the network communications manager **40** receives messages containing channel device control information and slave device control information, the network communications manager will provide the information to the control module **42** for processing.

With regards to the audio information channel device's clock timing information, as noted above, the master device **21** and slave devices **22**(*g*) of the synchrony group **20** obtain the clock timing information from the audio information channel device **23** using the well-known SNTP. If the zone player **11**(*n*) is operating as the audio information channel device **23** for a synchrony group, during the SNTP operation, it will provide its current time, particularly a current time as indicated by its digital to analog converter clock **34**. On the other hand, if the zone player **11**(*n*) is operating as the master device **21** or slave device **22**(*g*) of a synchrony group **20**, it will receive the clock timing information from the audio information channel device **23**. After the respective device **21**, **22**(*g*) has obtained the audio information channel device's clock timing information, it will generate a differential time value ΔT representing the difference between the time T indicated by its digital to analog converter clock **34** and the current time information from the audio information channel device **23**. The differential time value will be used to update the time stamps for the frames of the digital audio stream **50** (FIG. **4**) that are received from the audio information channel device.

With regards to the audio and playback timing information, operations performed by the network communications manager **40** will depend on whether

(i) the audio and playback timing information has been buffered in the audio information buffer **31** for transmission, as audio information channel device **23**, over the network **12** to the master device **21** and/or slave devices **22**(*g*) of a synchrony group, or

(ii) the audio and playback timing information has been received from the network **12** to be played by the zone player **11**(*n*) as either the master device **21** for a synchrony group or a slave device in a synchrony group.

It will be appreciated that the network communications manager **40** may be engaged in both (i) and (ii) contemporaneously, since the zone player **11**(*n*) may operate both as the audio information channel device **23**(**1**) for a synchrony group **20**(**1**) (reference FIG. **2**A) of which it is not a member, and a member of another synchrony group **20**(**2**) for which another zone player **11**(*n'*) is the audio information channel device **23**(**2**). With reference to item (i) above, after a packet that is to be transmitted has been buffered in the respective ring buffer, the network communications manager **40** retrieves the packet, packages it into a message and enables the network interface **41** to transmit the message over the network **12**. If the control module **42** receives control information from the user interface module **13** (if the master device **21** is also the audio information channel device **23** for the synchrony group **20**) or from the master device (if the master device **21** is not the audio information channel device **23** for the synchrony group **20**) that would require the transmission of a "resynchronize" command as described above, the control module **42** of the audio information channel device **23** enables the network communications manager **40** to insert the command into a message containing the audio and playback timing information. Details of the operations performed in connection with the "resynchronize" command will be described below. As noted above, the "resynchronize" command is used if the user enables a synchrony group to terminate the playback of a track that is currently being played, or cancel playback of a track whose playback has not begun.

On the other hand, with reference to item (ii) above, if network interface **41** receives a message containing a packet containing frames of audio and playback timing information that the zone player **11**(*n*) is to play either as a master device **21** or a slave device for a synchrony group **20**, the network interface **41** provides the audio and playback timing information to the network communications manager **40**. The network communications manager **40** will determine whether the packet contains a resynchronize command and, if so, notify the control module **42**, which will enable operations to be performed as described below. In any case, the network communications manager **40** will normally buffer the various frames comprising the audio and playback timing information in the audio information buffer **31**, and in that operation will generally operate as described above in connection with the audio information source interface **30**. Before buffering them, however, the network communications manager **40** will update their time stamps using the time differential value described above. It will be appreciated that the network communications manager **40** will perform similar operations whether the messages that contain the packets were multi-cast messages or unicast messages as described above

The updating of the time stamps by the master device **21** and the slave devices **22**(*g*) in the synchrony group **20** will ensure that they all play the audio information synchronously. In particular, after the network communications manager **40** has received a frame **51**(*f*) from the network interface **41**, it will also obtain, from the digital to analog converter clock **34**, the zone player **11**(*n*)'s current time as indicated by its digital to analog converter clock **34**. The network communications manager **40** will determine a time differential value that is the difference between the slave device's current clock time, as indicated by its digital to analog converter **34**, and the audio information channel device's time as indicated by the audio information channel device's clock timing information. Accordingly, if the master or slave device's current time has a value T_S and the audio information channel device's current time, as indicated by the clock timing information, has a value T_C, the time differential value $\Delta T=T_S-T_C$. If the current time of the master or slave device in the synchrony group **20**, as indicated by its digital to analog converter clock **34**, is ahead of the audio information channel device's clock time as indicated by the clock timing information received during the SNTP operation, the time differential value will have a

positive value. On the other hand, if the master or slave device's current time is behind the audio information channel device's clock time, the time differential value ΔT will have a negative value. If the zone player **11**(*n*) obtains clock timing information from the audio information channel device **23** periodically while it is a member of the synchrony group **20**, the network communications manager **40** can generate an updated value for the time differential value ΔT when it receives the clock timing information from the audio information channel device **23**, and will subsequently use the updated time differential value.

The network communications manager **40** uses the time differential value ΔT that it generates from the audio information channel device timing information and zone player **11**(*n*)'s current time to update the time stamps that will be associated with the digital audio information frames that the zone player **11**(*n*) receives from the audio information channel device. For each digital audio information frame that is received from the audio information channel device, instead of storing the time stamp that is associated with the frame as received in the message in the audio information buffer **21**, the network communications manager **40** will store the updated time stamp with the digital audio information frame. The updated time stamp is generated in a manner so that, when the zone player **11**(*n*), as a member of the synchrony group plays back the digital audio information frame, it will do so in synchrony with other devices in the synchrony group.

More specifically, after the zone player **11**(*n*)'s network interface **41** receives a message containing a packet that, in turn, contains one or more frames **51**(*f*), it will provide the packet to the network communications manager **40**. For each frame **51**(*f*) in the packet that the network communications manager **40** receives from the network interface **41**, the network communications manager **40** will add the time differential value ΔT to the frame's time stamp, to generate the updated time stamp for the frame **51**(*f*), and store the frame **51**(*f*), along with the header **55**(*f*) with the updated time stamp in the audio information buffer **31**. Thus, for example, if a frame's time stamp has a time value T_F, the network communications manager **40** will generate an updated time stamp T^U_F having a time value $T^U_F = T_F + \Delta T$. Since time value T^U_F according to the slave device's digital to analog converter clock **34** is simultaneous to the time value T_F according to the audio information channel device's digital to analog converter clock **34**, the zone player **11**(*n*) device will play the digital audio information frame at the time determined by the audio information channel device **23**. Since all of the members of the synchrony group **20** will perform the same operations, generating the updated time stamps T^U_F for the various frames **51**(*f*) in relation to their respective differential time values, all of the zone players **11**(*n*) in the synchrony group **20** will play them synchronously. The network communications manager **40** will generate updated time stamps T^U_F for all of the time stamps **60** in the packet, and then store the packet in the audio information buffer **31**.

It will be appreciated that, before storing a packet in the audio information buffer **21**, the network communications manager **40** can compare the updated time stamps T^U_F associated with the frames in the packet to the slave device's current time as indicated by its digital to analog converter clock **34**. If the network communications manager **40** determines the time indicated by the updated time stamps of frames **51**(*f*) in the packet are earlier than the zone player's current time, it can discard the packet instead of storing it in the audio information buffer **21**, since the zone player **11**(*n*) will not play them. That is, if the updated time stamp has a time value T^U_F that identifies a time that is earlier than the zone player's current time T_S as indicated by the zone player's digital to analog converter clock **34**, the network communications manager **40** can discard the packet.

If the zone player **11**(*n*) is operating as the master device **21** of a synchrony group **20**, when the user, through the user interface module **13**, notifies the zone player **11**(*n*) that another zone player **11**(*n'*) is to join the synchrony group **20** as a slave device **22**(*g*), the control module **42** of the zone player **11**(*n*) enables the network communications manager **40** to engage in an exchange of messages, described above in connection with FIG. **2**, to enable the other zone player **11**(*n'*) to join the synchrony group **20** as a slave device. As noted above, during the message exchange, the messages generated by the network communications manager **40** of the zone player **11**(*n*) will provide the network communications manager of the zone player **11**(*n'*) that is to join the synchrony group **20** with information such as the multi-cast address being used by the audio information channel device **23** that is providing the audio program to the synchrony group **20**, as well as a unicast network address for the audio information channel device **23**. After receiving that information, the network communications manager and network interface of the zone player **11**(*n'*) that is to join the synchrony group **20** can begin receiving the multi-cast messages containing the audio program for the synchrony group, engage in SNTP transactions with the audio information channel device **23** to obtain the latter's current time, and also enable the audio information channel device **23** to send the zone player **11**(*n'*) frames **51**(*f*) that it had previously broadcast using the unicast message transmission methodology as described above.

On the other hand, if the network communications manager **40** and network interface **41** of the zone player **11**(*n*) receive a message over the network **12** indicating that it is to become a slave device **22**(*g*) of a synchrony group for which another zone player **11**(*n'*) is the master device, the network communications manager **40** for zone player **11**(*n*) will provide a notification to the control module **42** of zone player **11**(*n*). Thereafter, the control module **42** of zone player **11**(*n*) can enable the network communications manager **40** of zone player **11**(*n*) to perform the operations described above to enable it to join the synchrony group **20**.

As noted above, the user, using user interface module **13**, can enable the synchrony group to terminate playback of a track of an audio program that is currently being played. After playback of a track that is currently being played has been terminated, playback will continue in a conventional manner with the next track that has been buffered in the audio information buffer **31**. It will be appreciated that that could be the next track that is on the original play list, or a previous track. In addition, the user can enable the synchrony group **20** to cancel playback of a track that it has not yet begun to play, but for which buffering of packets has begun in the synchrony group **20**. Both of these operations make use of the "resynchronize" command that the master device **21** of the synchrony group **20** can enable the audio information channel device **23** to include in the multi-cast message stream that it transmits to the synchrony group **20**. Generally, in response to receipt of the resynchronize command, the members of the synchrony group **20** flush the ring buffer containing the packets that they are to play in the future. In addition, if the members of the synchrony group provide separate buffers for their respective digital to analog converters **33**, the members will also flush those buffers as

well. After the audio information channel device transmits a packet containing the resynchronize command:

(i) in the case of the use of the resynchronize command to terminate playing of a track that is currently being played, the audio information channel device **23** will begin multi-casting packets for the next track, to begin play immediately, and will continue through the play list in the manner described above; and

(ii) in the case of the use of the resynchronize command to cancel play of a track for which buffering has begun, but which is to be played in the future, the audio information channel device **23** will begin multi-casting packets for the track after the track that has been cancelled, to be played beginning at the time the cancelled track was to begin play, and will also continue through the play list in the manner described above.

It will be appreciated that,

(a) in the first case (item (i) directly above), the resynchronize command can enable the read pointer to be set to point to the entry in the circular buffer into which the first packet for the next track will be written, which will correspond to the entry to which the write pointer points, but

(b) in the second case (item (ii) directly above), the resynchronize command can enable the write pointer for the circular buffer to be set to point to the entry that contains the first packet for the track whose play is being cancelled.

It will further be appreciated that, if a track is cancelled for which buffering has not begun, the resynchronize command will generally not be necessary, since the audio information channel device **23** for the synchrony group **20** need only delete that track from the play list.

Operations performed in connection with use of the resynchronize command to cancel playback of a track that is currently being played will be described in connection with Packet Sequence A below, and operations performed in connection with the use of the resynchronize command to cancel playback of a track that is has not yet begun to play, but for which buffering of packets has begun, will be described in connection with Packet Sequence B below.

Packet Sequence A	
(A1.0)	[packet 57]
(A1.1	[continuation of frame 99]
(A1.2)	[frame 100, time = 0:00:01, type = mp3 audio]
(A1.3)	[frame 101, time = 0:00:02, type = mp3 audio]
(A1.4)	[frame 102, time = 0:00:03, type = mp3 audio]
(A2.0)	[packet 58]
(A2.1)	[continuation of frame 102]
(A2.2)	[frame 103, time = 0:00:04, type = mp3 audio]
(A2.3)	[frame 104, time = 0:00:05, type = mp3 audio]
(A2.4)	[frame 105, time = 0:00:06, type = mp3 audio]
(A3.0)	[packet 59]
(A3.1)	[continuation of frame 105]
(A3.2)	[frame 106, time = 0:00:07, type = mp3 audio]
(A3.3)	[frame 107, time = 0:00:08, type = mp3 audio]
(A3.4)	[frame 108, time = 0:00:09, type = mp3 audio]
(A4.0)	[packet 60]
(A4.1)	[continuation of frame 108]
(A4.2)	[frame 109, time = 0:00:10, type = mp3 audio]
(A4.3)	[Resynchronize command]
(A4.4)	[Padding, if necessary]
(A5.0)	[packet 61]
(A5.1)	[frame 1, time = 0:00:07, type = mp3 audio]
(A5.2)	[frame 2, time = 0:00:08, type = mp3 audio]
(A5.3)	[frame 3, time = 0:00:09, type = mp3 audio]
(A5.4)	[frame 4, time = 0.00.10, type = mp3 audio]
(A6.0)	[packet 62]
(A6.1)	[continuation of frame 4]
(A6.2)	[frame 5, time = 0:00:11, type = mp3 audio]

-continued

Packet Sequence A	
(A6.3)	[frame 6, time = 0:00:12, type = mp3 audio]
(A6.4)	[frame 7, time = 0:00:13, type = mp3 audio]

Packet Sequence A comprises a sequence of six packets, identified by packet **57** through packet **62**, that the audio information channel device **23** multi-casts in respective messages to the members of a synchrony group **20**. It will be appreciated that the series of messages that the audio information channel device **23** may multi-cast to the synchrony group **20** may include a messages prior to the packet **57**, and may also include messages after packet **62**. Each packet comprises a packet header, which is symbolized by lines (A1.0), (A2.0), . . . (A6.0) in Packet Sequence A, and will generally also include information associated with at least a portion of a frame. In the packets represented in Packet Sequence A, each packet includes information associated with a plurality of frames. Depending on the lengths of the packets, each packet may contain information associated with a portion of a frame, an entire frame, or multiple frames. In the illustration represented by Packet Sequence A, it is assumed that each packet may contain information associated with multiple frames. In addition, it is assumed that a packet does not necessarily contain information associated with an integral number of frames; in that case, a packet may contain information associated with a portion of a frame, and the next packet will contain the information associated with the rest of a frame.

The frames and associated header playback timing information contained in the various packets are symbolized by lines (A1.1), (A1.2), . . . , (A1.4), (A2.1), ... (A6.4) of Packet Sequence A. Thus, for example, line (A1.2) of packet **57** represents the one-hundredth frame, that is, frame **51**(**100**) (reference FIG. **4**), of the track whose audio information is being transmitted in the sequence of packets that includes packet **57**. The frame **51**(**100**) is to be played at an illustrative time, according to the audio information channel device's digital to analog converter clock, of "time=0:00:01," and the frame is encoded and/or compressed using the well-known MP3 encoding and compression methodology. In that case, the legend"time=0:00:01" represents the time stamp that would be included in field **60** (FIG. **4**) of the header associated with the frame **50**(**100**) as multi-cast by the audio information channel device for the synchrony group. It will be appreciated that the playback time and encoding/compression methodology will be referred in the header **55**(**100**) that is associated with the frame **51**(**100**). It will also be appreciated that the header may also contain additional information as described above.

Similarly, line (A1.3) of packet **57** represents the one-hundred and first frame, that is, frame **51**(**101**), of the track whose audio information is being transmitted in the sequence of packets that includes packet **57**. The frame **51**(**101**) is to be played at an illustrative time, according to the audio information channel device's digital to analog converter clock, of "0:00:02," and the frame is also encoded and/or compressed using the MP3 encoding and compression methodology. Line (A1.4) of packet **57** represents similar information, although it will be appreciated that, depending on the length of packet **57**, the line may not represent the information for an entire frame **51**(**102**) and/or its associated header. If the length of packet **57** is not sufficient to accommodate the information for the entire frame **51**(**102**) and/or associated header, the information will continue in packet **58**, as represented by line (A2.1) in

Packet Sequence A. Similarly, if the length of packet **56** was not sufficient to contain the information for an entire frame **51**(**99**) preceding frame **51**(**100**), packet **57** (lines (A1.0) through 1.4) may contain any information from frame **51**(**99**) that packet **56** was unable to accommodate.

As noted above, when the master device **21** or a slave device **22**(*g*) in the synchrony group **20** receives the packet **57**, its respective network communications manager **40** will update the time stamps associated with the various frames **51**(*f*) as described above before buffering the respective frames in the respective audio information buffer **31**.

Packets **58** and **59** contain information that is organized along the lines described above in connection with packet **57**.

Packet **60** also contains, as represented by lines (A4.1) and (A4.2), information that is organized along the lines of the information represented by lines (Ax.1) and (Ax.2) ("x" equals an integer) described above in connection with packets **57** through **59**. On the other hand, packet **60** contains a resynchronize command, as represented by line (A4.3). Packet **60** also may contain padding, as represented by line 4.4, following the resynchronize command. As noted above, the master device **21** of a synchrony group **20** will enable the audio information channel device **23** that is providing audio information to the synchrony group **20** to multi-cast a message containing the resynchronize command when it receives notification from the user interface module **13** that the user wishes to cancel playback of a track that is currently being played. In the example depicted in Packet Sequence A, as will be described below, the audio information channel device **23** receives notification from the master device **21** that the user wishes to cancel playback of a track at a time corresponding to "time=0:00:07" according to its digital to analog converter clock **34**, and, in line (A4.3) of packet **60** it will provide the resynchronize command, followed by padding, if necessary.

As will be apparent from examining lines (A3.1) through (A3.4) of packet **59** and lines (A4.1) and (A4.2) of packet **60**, although the audio information channel device **23** has received the notification from the synchrony group's master device **21** to multi-cast the resynchronize command at a time corresponding to "time=0:00:07" according to the clock time indicated by its digital to analog converter clock **34**, it (that is, the audio information channel device **23**) has already multi-cast messages containing frames that are to be played at that time and subsequently. That is, the audio information channel device **23** has, multi-cast in packet **59**, frames **51**(**106**) through **51**(**108**) that contain time stamps "time=0:00:07," "time=0:00:08" and "time=0:00:09," respectively, and, in packet **60**, in addition to the continuation of frame **51**(**108**), frame **51**(**109**) that contains time stamp "time=0:00:10." (It will be appreciated that the times indicated by the illustrative time stamps are for illustration purposes only, and that in an actual embodiment the time stamps may have different values and differentials.)

As noted above, the audio information channel device **23** multi-casts a message containing a packet that, in turn, contains the resynchronize command when it receives the notification from the master device **21** to do so. In the example depicted in Packet Sequence A, the packet will be multi-cast when the audio information channel device's digital to analog converter clock time corresponds to "0:00:07." Subsequently, two things happen. In one, aspect, when the master device **21** and slave devices **22**(*g*) receive the packet that contains the resynchronize command, they will stop playing the audio program that they are playing.

In addition, the audio information channel device **23** will begin transmitting frames containing audio information for the next track, including therewith time stamps immediately following the digital to analog converter clock time at which the packet including the resynchronize command was transmitted. Accordingly, and with further reference to Packet Sequence A, the audio information channel device **23** will multi-cast a message containing packet **61**. As indicated above, packet **61** contains, as represented in lines (A5.1) through (A5.3), frames **51**(**1**) through **51**(**3**), which are the first three frames of the next track of the audio program that is to be played. It is also compressed and encoded using the MP3 encoding and compression scheme, and it is accompanied by time stamps "time=0:00:07," "time=0:00:08" and "time=0:00:10." As noted above, the time stamp "time=0:00:07" corresponds to the clock time at which the audio information channel device **23** multi-casts the resynchronize command, and, when the master device **21** and slave devices **22**(*g*) receive these frames, they would be expected to begin playing them very shortly, if not immediately after the audio information channel device **23** multi-casts the message containing the packet that, in turn, contains the resynchronize command. Packet **61** also includes at least a portion of the next frame, that is, frame **51**(**4**), for that track. In addition, Packet Sequence A depicted above further includes a subsequent packet, namely, packet **62**, that contains any necessary continuation of frame **51**(**4**), as well as three subsequent frames. If any additional packets are required for the track, as well as for subsequent tracks, they can be multi-cast in a similar manner.

As further noted above, the resynchronize command can also be used to cancel playing of one or more tracks for which playback has begun. This will be illustrated in connection with Packet Sequence B:

Packet Sequence B	
(B1.0)	[packet 157]
(B1.1)	[continuation of frame 99]
(B1.2)	[frame 100, time = 0:00:01, type = mp3 audio]
(B1.3)	[frame 101, time = 0:00:02, type = mp3 audio]
(B1.4)	[frame 102, time = 0:00:03, type = mp3 audio]
(B2.0)	[packet 158]
(B2.1)	[continuation of frame 102]
(B2.2)	[frame 103, time = 0:00:04, type = mp3 audio]
(B2.3)	[frame 104, time = 0:00:05, type = mp3 audio]
(B2.4)	[frame 105, time = 0:00:06, type = mp3 audio]
(B3.0)	[packet 159]
(B3.1)	[continuation of frame 105]
(B3.2)	[frame 106, time = 0:00:07, type = mp3 audio]
(B3.3)	[track boundary notification]
(B3.4)	[Padding, if necessary]
(B4.0)	[packet 160]
(B4.1)	[frame 1, time = 0:00:08, type = mp3 audio]
(B4.2)	[frame 2, time = 0:00:09, type = mp3 audio]
(B4.3)	[frame 3, time = 0:00:10, type = mp3 audio]
(B5.0)	[packet 161]
(B5.1)	[continuation of frame 3]
(B5.2)	[frame 4, time = 0:00:11, type = mp3 audio]
(B5.3)	[Resynchronize, after packet 159]
(B5.4)	[Padding, if necessary]
(B6.0)	[packet 162]
(B6.1)	[frame 1, time = 0:00:08, type = mp3 audio]
(B6.2)	[frame 2, time = 0:00:09, type = mp3 audio]
(B6.3)	[frame 3, time = 0:00:10, type = mp3 audio]
(B6.4)	[frame 4, time = 0:00:11, type = mp3 audio]
(B7.0)	[packet 163]
(B7.1)	[continuation of frame 4]
(B7.2)	[frame 5, time = 0:00:12, type = mp3 audio]
(B7.3)	[frame 6, time = 0:00:13, type = mp3 audio]
(B7.4)	[frame 7, time = 0:00:14, type = mp3 audio]

Packet Sequence B comprises a series of seven packets, identified by packet **157** through **163**, that the audio information channel device **23** multi-casts to the members of a synchrony group **20**. As with Packet Sequence A, it will be appreciated that the series of packets that the audio information channel device **23** may multi-cast to the synchrony group **20** may include packets prior to the packet **157**, and may also include packets after packet **162**. Each packet comprises a packet header, which is symbolized by lines (B1.0), (B2.0), . . . (B7.0) in Packet Sequence B. As in Packet Sequence A, each packet will also generally include information associated with at least a portion of a frame **51**(*f*) along with its associated frame **55**(*f*). As in the packets represented in Packet Sequence A, each packet includes information associated with a plurality of frames. Depending on the lengths of the packets, each packet may contain information associated with a portion of a frame, an entire frame, or multiple frames. Further, as with Packet Sequence A, it is assumed that each packet may contain information associated with multiple frames. In addition, it is assumed that a packet does not necessarily contain information associated with an integral number of frames; in that case, a packet may contain information associated with a portion of a frame, and the next packet will contain the information associated with the rest of a frame.

The structures of the packets represented by Packet Sequence B are similar to those described above in connection with Packet Sequence A, and will not be repeated here. Generally, Packet Sequence B illustratively contains a sequence of packets that represent at least portions of three tracks that may have been selected from, for example, a play list. In particular, packets **157** through **159** represent frames from a portion of one track, packets **160** and **161** represent frames from a second track and packets **162** and **163** represent frames from a third track. The play list indicated that the first, second and third tracks were to be played in that order. With particular reference to Packet Sequence B, it should be noted that line (B3.3) indicates that packet **159** includes an indication that that packet contains the last frame for the track, and line (B3.4) provides for padding to the end of the packet. The first frame of the next track begins in packet **160**.

In connection with the use of the resynchronize command to cancel playback of a track, at least a portion of which the audio information channel device **23** has multi-cast to the members of the synchrony group, packet **161**, in line (B5.3) represents a resynchronize command that indicates that resynchronization is to occur after packet **159**, that is, immediately after the packet that contains the last frame of the first of the three tracks represented by the packets in Packet Sequence B. It should be noted that the resynchronize command is in the packet **161**, while the resynchronization is to occur at packet **160**, that is, the synchrony group is to not play the track starting with packet **160**, but instead is to begin playing the track frames for which begin with the next packet, that is, packet **162**. As with Packet Sequence A, in Packet Sequence B the audio information channel device **23**, in packet **162** and **163**, multi-casts frames whose time stamps indicate that they are to be played when the frames that were multi-cast in packets **160** and **161** were to be played. By use of the resynchronize command and specifying a packet in this manner, the audio information channel device can cancel playback of a track for which playback has not yet begun.

It will be appreciated that the resynchronize command is generally not necessary for cancelling play back of a track that the audio information channel device **23** has not started multi-casting to the synchrony group **20**, since the audio information channel device **23** itself can re-order the play list to accommodate the cancellation.

The invention provides a number of advantages. In particular, the invention provides a network audio system in which a number of devices share information can reproduce audio information synchronously, notwithstanding the fact that packets, which may contain digital audio information, transmitted over the network to the various zone players connected thereto may have differing delays and the zone players operate with independent clocks. Moreover, although the invention has been described in connection with audio information, it will be appreciated that the invention will find utility in connection with any type of isochronous information for which synchrony among devices is desired. The system is such that synchrony groups are created and destroyed dynamically, and in such a manner as to avoid requiring a dedicated device as the master device.

It will be appreciated that a number of changes and modifications may be made to the network audio system **10** as described above. For example, although the invention has been described as providing that the audio information channel device **23** provides digital audio information to the members synchrony group **20** that has been encoded using particular types of encoding and compression methodologies, it will be appreciated that the audio information channel device **23** can provide digital audio information to various members of the synchrony group **20** that have been encoded and compressed using different types of encoding and compression methodologies, and, moreover, for which different sampling rates have been used. For example, the audio information channel device **23** may provide digital audio information to the master device **21** and slave devices **22**(**1**) through **22**(g_1) using the MP3 methodology at a specified sampling rate, the digital audio information for the same program to slave devices **22**(g_1+1) through **22**(g_2) using the WAV methodology at one specified sampling rate, and to slave devices **22**(g_2+1) through **22**(G) using the WAV methodology at another specified sampling rate. In that case, the audio information channel device **23** can specify the particular encoding and compression methodology that has been used in the encoding type field **57** associated with each frame and the sampling rate in the sampling rate field **58**. Moreover, since the encoding and compression type and sampling rate are specified for each frame, the encoding and compression type and sampling rate can be changed from frame to frame. The audio information channel device **23** may use different multi-cast addresses for the different encoding and compression types and sampling rates, but it will be appreciated that that would not be required.

It will be appreciated that two advantages of providing that the encoding and compression methodology and the sampling rate is provided on a frame-by-frame basis, instead of on, for example, a track-by-track basis, is that that would facilitate a slave device joining the synchrony group **20** at a frame mid-track, without requiring, for example, the master device **21** or the audio information channel device **23** to notify it of the encoding and compression methodology or the sampling rate.

Another modification is that, instead of the network communications manager **40** of a member of a synchrony group **20** generating the updated time stamp T^u_F for a digital audio information frame by adding the time differential value ΔT to the time stamp T_F associated with a frame, the network communications manager **40** may instead generate the updated time stamp T^U_F by subtracting the differential time value ΔT from the member's current time T_S as indi-

cated by the member's digital to analog converter clock **34** at the time at which the digital audio information is received. It will be appreciated, however, that there may be variable time delays in processing of messages by the slave device's network communications manager **40**, and so it may be preferable to generate the time differential value ΔT using the time stamp T_F provided by the audio information channel device **23**.

In addition, instead of the network communications manager **40** of a member of a synchrony group generating an updated time stamp to reflect the difference between the times indicated by the member's digital to analog converter clock and the audio information channel device's digital to analog converter clock, the network communications manager **40** can generate the time differential value ΔT and provide it to the member's playback scheduler **32**. In that case, the member's network communications manager **40** can store each digital audio information frame along with the time stamp T_F as received from the master device in the audio information buffer **21**. The playback scheduler **32** can utilize the time differential value ΔT, and the time stamps T_F associated with the digital audio information frames, to determine when the respective digital audio information frames are to be played. In determining when a digital audio information frame is to be played, the playback scheduler can add the time differential value to the time stamp T_F associated with the digital audio frame, and enable the digital audio frame to be coupled to the digital to analog converter **33** when the time indicated by the sum corresponds to the current time as indicated by the slave device's digital to analog converter clock **34**. Alternatively, when the member's digital to analog converter clock **34** updates its current time T_S, the playback scheduler can generate an updated current time T'_S by subtracting the differential time value ΔT from the current time T_S, and using the updated current time T'_S to determine when to play a digital audio information frame.

As described above, the members of a synchrony group **20** periodically obtain the audio information channel device's current time value and uses the current time value that it receives from the audio information channel device to periodically update the time differential value ΔT that it uses in updating the time stamps associated with the various frames. It will be appreciated that, if the digital to analog converter clock(s) associated with the member(s) of a synchrony group **20** are ensured to have the same rate as the digital to analog converter clock, a member need only obtain the current time value from the audio information channel device once, at the beginning of playback.

As another alternative, if the zone players are provided with digital to analog converter clock **34** whose time and rate can be set by an element such as the network communications manager **40**, when a zone player **11**(*n*) is operating as a member of a synchrony group **20**, its network communications manager **40** can use the various types of timing information that it receives from the audio information channel device **23**, including the current time information and the playback timing information indicated by the time stamps that are associated with the various frames **51**(*f*) comprising the audio and playback timing information that it receives, to adjust the synchrony group member's digital to analog converter clock's time value and/or the clock rate that it uses for playback. If the clock's time value is to be adjusted, when the synchrony group member's network communications manager **40** initially receives the current time information from the audio information channel device **23** for the synchrony group **20**, the network communications manager **40** can set the synchrony group member's digital to analog converter clock **34** to the current time value as indicated by the audio information channel device's current time information. The network communications manager **40** can set the clock **34** to the current time value indicated by the audio information channel device's current time information once, or periodically as it receives the current time information.

Alternatively or in addition, the synchrony group member's network communications manager **40** can use one or both of the current time information and/or the playback timing information in the time stamps associated with the respective frames **51**(*f*) to adjust the clock rate of the clock **34** that it uses for playback. For example, when the synchrony group member's network communications manager **40** receives a frame **51**(f_X) having a time stamp having a time value T_{f_X}, it can generate the updated time value $T^U_{f_X}=T_{f_X}+\Delta T$ as described above, and store the frame with the time stamp with the updated time value in the audio information buffer **30**. In addition, since both the number of samples in a frame and the sampling rate, which determines the rate at which the frame is to be played, are known to the network communications manager **40**, it can use that information, along with the updated time value $T^U_{F_X}$ that is to be used for frame **51**(f_X) to generate an expected updated time value $T^E_{f_{X+1}}$ that is expected for the updated time stamp of the next frame **51**(f_{X+1}). After the synchrony group member's network communications manager **40** receives the next frame **51**(f_{X+1}), it can generate the updated time value $T^U_{f_{X+1}}$ and compare that value to the expected updated time value $T^E_{f_{X+1}}$. If the two time values do not correspond, or if the difference between them is above a selected threshold level, the clock that is used by the audio information channel device **23** to generate the time stamps is advancing at a different rate than the synchrony group member's digital to analog converter clock **34**, and so the network communications manager **40** can adjust the rate of the digital to analog converter clock **34** to approach that of the clock used by the audio information channel device **23** so that the differential time value ΔT is constant. On the other hand, if the two time values do correspond, then the time differential value ΔT is constant, or the difference is below a threshold level, and the network communications manager **40** need not change the clock rate of the digital to analog converter clock **34**. It will be appreciated that, if the clock rate is to be adjusted, the rate adjustment can be fixed, or it can vary based on, for example, the difference between the updated time value $T^U_{f_{X+1}}$ and the expected updated time value $T^E_{f_{X+1}}$.

It will also be appreciated that, if no rate adjustment is performed for one frame **51**(f_{X+1}), the synchrony group member's network communications manager **40** can generate an expected updated time value $T^E_{f_{X+2}}$ that is expected for the updated time stamp of the next frame **51**(f_{X+2}) using the updated time value $T^U_{F_X}$ determined for frame **51**(f_X), along with the number of samples in a frame and the sampling rate, and compare the expected updated time value $T^E_{f_{X+2}}$ to the updated time value $T^U_{f_{X+2}}$ that it generates when it receives frame **51**(f_{X+2}). At that point, if the network communications manager **41** determines that two time values do not correspond, or if the difference between them is above a selected threshold level, it can adjust the rate of the digital to analog converter clock **34**. Similar operations can be performed if no rate adjustment is performed for several successive frames **51**(f_{X+1}), **51**(f_{X+2}), ... This will accommodate the possibility that the rate differential between the clock **34** and the clock used by the audio information channel device **23** in generating the time stamps have rates that differ by an

amount sufficiently small that it cannot be detected using time stamps of two or more successive frames.

Instead or in addition to adjusting the clock rate as described above, the synchrony group member's network communications manager **40** can perform similar operations in connection with adjusting the clock rate in connection with the current time information that it receives from the audio information channel device **23**.

Furthermore, although the network audio system **10** has been described such that the master device **21** of a synchrony group **20** can, in response to control information provided thereto by a user through the user interface module **13**, provide a notification to a zone player **11**(*n*) that it is to become a member of its synchrony group **20** as a slave device **22**(*g*), it will be appreciated that the user interface module **13** can provide the notification directly to the zone player **11**(*n*) that is to become a member of the synchrony group **20**. In that case, the zone player **11**(*n*) can notify the master device **21** that it is to become a slave device **22**(*g*) in the synchrony group **20**, after which the master device **21** can provide information regarding the synchrony group **20**, including the multi-cast and unicast addresses of the audio information channel device and other information as described above.

Similarly, although the network audio system **10** has been described such that the master device **21** of a synchrony group **20** can, in response to control information provided thereto by a user through the user interface module **13**, provide a command to a slave device **22**(*g*) to enable the slave device **22**(*g*) to adjust its volume, it will be appreciated that the user interface module **13** can provide control information directly to the slave device **22**(*g*) to enable the slave device **22**(*g*) to adjust its volume.

In addition, although the network audio system **10** has been described such that each frames **51**(*f*) is associated with a frame sequence number (reference field **56**, FIG. **4**), it will be appreciated that, if the packets described above in connection with Packet Sequence A and Packet Sequence B are provided with packet sequence numbers, the frame sequence numbers need not be provided, since the packet sequence numbers can suffice for defining the frame sequencing.

Furthermore, although the network audio system **10** has been described such that the zone players **11**(*n*) are provided with an audio amplifier **35** for amplifying the analog signal provided by the respective digital to analog converters **33**, it will be appreciated that a zone player may be provided that does not itself include an audio amplifier. In that case, the analog signal may be coupled to an external amplifier for amplification as necessary before being provided to the audio reproduction device(s) **15**(*n*)(*r*). It will be appreciated that a single zone player **11**(*n*) may be provided with multiple audio amplifiers and audio reproduction device interfaces, and, if necessary, multiple digital to analog converters **33**, to provide audio programs for corresponding numbers of synchrony groups.

Similarly, although the zone players **11**(*n*) have been described such that they may be connected to one or more audio information sources, it will be appreciated that an audio information source may form part of and be integrated into a zone player **11**(*n*). For example, a zone player may include a compact disk player, cassette tape player, broadcast radio receiver, or the like, that has been integrated into it. In addition, as noted above, an individual zone player **11**(*n*) may be connected to multiple audio information sources and may contemporaneously operate as the audio information channel device **23** for multiple synchrony groups.

In addition, although FIG. **1** shows the network audio system **10** as including one user interface module **13**, it will be appreciated that the system **10** may include a plurality of user interface modules. Each user interface module be useful for controlling all of the zone players as described above, or alternatively one or more of the user interface modules may be useful for controlling selected subsets of the zone players.

Moreover, it will be appreciated that, although the invention has been described in connection with audio information, it will be appreciated that the invention will find utility in connection with any type of information for which synchrony among devices connected to a network is desired.

As noted above, while a zone player **11**(*n*) is operating as audio information channel device **23** for a synchrony group **20**, when the zone player **11**(*n*)'s audio information source interface **30** or network communications manager **40** stores digital audio information frames based on audio information from an audio information source **14**(*n*)(*s*) in the audio information buffer **31**, it will provide time stamps for the respective frames to schedule them for playback after some time delay after they have been buffered in the audio information buffer **31**. The delay is provided so that, for other zone players **11**(*n*'), **11**(*n*''), . . . that are operating as members of a synchrony group, there will be sufficient time for the audio and playback timing information to be transferred over the network **12** to those other zone players **11**(*n*'), **11**(*n*''), . . . so that it can be processed and played by them at the appropriate time as described above. The time period that is selected for the time delay may be fixed or variable, and in either case may be based on a number of factors. If the time period selected for the time delay is fixed, it may be based on, for example, factors such as an estimate of the maximum latency in the network **12**, the estimated maximum loading of the various components comprising the zone players **11**(*n*), and other estimates as will be appreciated by those skilled in the art.

The time delay may be the same for audio information from all types of audio information sources, and may be constant over the entire period that the synchrony group **20** is playing an audio work. Alternatively, different time delays may be utilized based on various criteria. For example, if the audio information is to be played independently of information associated with other types of media, the time delay may be selected to be relatively long, on the order of a significant fraction of a second, or longer. On the other hand, if the audio information is to be played contemporaneously with, for example, video information, which may be supplied by, for example, a video disk, video tape cassette, over cable, satellite, or broadcast television, which may not be buffered or which may be displayed independently of the network audio system **10**, it may be undesirable to provide for such a lengthy delay, since the time delay of the audio playback, in relation to the video display, may be noticeable. In that case, the zone player **11**(*n*) may provide for a much shorter time delay. In one embodiment, the time delay provided for audio information to be played concurrently with video information is selected to be generally on the order of fifty milliseconds, which would barely, if at all, be perceptible to someone viewing the video. Other desirable time delays for information from other types of sources will be apparent to those skilled in the art.

As yet a further possibility, the zone player **11**(*n*), when operating as an audio information channel device **23** for a synchrony group **20**, can dynamically determine the time delay based on a number of conditions in the network audio system **10**, including, for example, the message transfer latency in network **12**, the loading of microprocessors or

other components that are used in the various zone players **11**(*n*'), **11**(*n*"), . . . that may comprise a synchrony group **20**, as well as other factors. For example, if the audio information channel device **23** determines that the latency in the network **12** has increased beyond a selected threshold, the audio information channel device **23** can adjust the delay to increase the likelihood that the members of the synchrony group **20** will be able to receive the packets and process the frames so that they will be able to play them at the appropriate times. Similarly, if the audio information channel device **23** is notified that a member of the synchrony group **20** to which it provides audio information requires additional time to receive and process the frames that it transmits, the audio information channel device **23** can adjust the delay accordingly. It will be appreciated that, to reduce or minimize possible discontinuities in the audio playback by the members of the synchrony group, the audio information channel device **23** can, instead of adjusting the time delay during a particular audio track, adjust the time delay between tracks, during silent periods of a track or otherwise as will be appreciated by those skilled in the art. In addition, the audio information channel device **23** can use conventional audio compression methodologies to facilitate a speeding up and/or slowing down of playback of an audio track while it is in the process of providing additional time delay. Generally, the members of the synchrony group **20** can provide notifications to the audio information channel device **23** if they determine that they will need an additional time delay, and the audio information channel device **23** can adjust the time delay in accordance with the notifications from the members of the synchrony group **20**.

It will be appreciated that a system in accordance with the invention can be constructed in whole or in part from special purpose hardware or a general purpose computer system, or any combination thereof, any portion of which may be controlled by a suitable program. Any program may in whole or in part comprise part of or be stored on the system in a conventional manner, or it may in whole or in part be provided in to the system over a network or other mechanism for transferring information in a conventional manner. In addition, it will be appreciated that the system may be operated and/or otherwise controlled by means of information provided by an operator using operator input elements (not shown) which may be connected directly to the system or which may transfer the information to the system over a network or other mechanism for transferring information in a conventional manner.

The foregoing description has been limited to a specific embodiment of this invention. It will be apparent, however, that various variations and modifications may be made to the invention, with the attainment of some or all of the advantages of the invention. It is the object of the appended claims to cover these and such other variations and modifications as come within the true spirit and scope of the invention.

What is claimed as new and desired to be secured by Letters Patent of the United States is:

1. A method performed by a first zone player, the method comprising:

receiving, via a network interface at the first zone player, a request to engage in synchronous playback of audio content as part of a synchrony group that includes at least a second zone player that is communicatively coupled to the first zone player via at least one data network;

after receiving the request to enter into the synchrony group:

detecting an indication that the first zone player is to operate in (a) one of a control-master mode or a control-slave mode for the synchrony group and (b) one of an audio-master mode or an audio-slave mode for the synchrony group; and

beginning to operate in the synchrony group in accordance with the indication;

wherein, while operating in the control-master mode for the synchrony group, the first zone player is configured to:

receive, via the network interface, first control information for the synchrony group from a network device that is communicatively coupled to the first zone player; and

based on the first control information, cause, via the network interface, at least one playback action to be applied in the synchrony group;

wherein, while operating in the control-slave mode for the synchrony group, the first zone player is configured to:

receive, via the network interface, second control information from another zone player; and

perform one or more playback actions in accordance with the second control information;

wherein, while operating in the audio-master mode for the synchrony group, the first zone player is configured to:

obtain audio information that is representative of the audio content;

generate playback timing information associated with the obtained audio information that is indicative of at least one future time relative to a reference clock time that denotes a time at which at least the first and second zone players are to engage in synchronous playback of a corresponding portion of the obtained audio information; and

transmit, via the network interface, the obtained audio information and the generated playback timing information to the second zone player; and

wherein, while operating in the audio-slave mode for the synchrony group, the first zone player is configured to:

receive, via the network interface, audio information and playback timing information associated with the received audio information from another zone player; and

engage in synchronous playback of the received audio information with at least the second zone player based on the received playback timing information associated with the received audio information while a local clock time of the first zone player differs from a local clock time of the second zone player.

2. The method of claim **1**, wherein detecting an indication that the first zone player is to operate in (a) one of a control-master mode or a control-slave mode for the synchrony group and (b) one of an audio-master mode or an audio-slave mode for the synchrony group comprises detecting an indication that the first zone player is to operate in (a) the control-master mode for the synchrony group and (b) the audio-master mode for the synchrony group.

3. The method of claim **2**, wherein the obtained audio information comprises a beginning of the obtained audio information, and wherein the playback timing further comprises a future time relative to the reference clock time that denotes a time at which at least the first and second zone players are to initiate synchronous playback at the beginning of the obtained audio information.

4. The method of claim **1**, wherein detecting an indication that the first zone player is to operate in (a) one of a control-master mode or a control-slave mode for the syn-

chrony group and (b) one of an audio-master mode or an audio-slave mode for the synchrony group comprises detecting an indication that the first zone player is to operate in (a) the control-slave mode for the synchrony group and (b) the audio-master mode for the synchrony group.

5. The method of claim **4**, wherein the obtained audio information comprises a beginning of the obtained audio information, and wherein the playback timing further comprises a future time relative to the reference clock time that denotes a time at which at least the first and second zone players are to initiate synchronous playback at the beginning of the obtained audio information.

6. The method of claim **1**, wherein beginning to operate in the synchrony group in accordance with the indication comprises either (a) transitioning from operating in the audio-master mode to operating in the audio-slave mode or (b) transitioning from operating in the audio-slave mode to operating in the audio-master mode.

7. The method of claim **1**, wherein the first control information identifies particular audio content to be played back by the synchrony group that is available at an audio source outside of the at least one data network, and wherein causing the at least one playback action to be applied in the synchrony group comprises causing a zone player operating in the audio-master mode to obtain audio information that is representative of the particular audio content.

8. The method of claim **1**, wherein the at least one future time relative to the reference clock time comprise at least one first future time that is determined based on a local clock of a zone player other than the first zone player.

9. The method of claim **1**, wherein the at least one future time relative to the reference clock time comprise at least one first future time that is determined based on a local clock of the first zone player.

10. The method of claim **1**, wherein the second control information comprises information indicative of a volume adjustment, and wherein performing one or more playback actions in accordance with the second control information comprises adjusting a playback volume of the first zone player.

11. The method of claim **1**, wherein the playback timing information that is received while operating in the audio-slave mode comprises at least one future time at which at least the first and second zone players are to engage in synchronous playback of a corresponding portion of the received audio information, and wherein operating in the audio-slave mode to engage in synchronous playback of the received audio information with at least the second zone player comprises:

updating the at least one future time to account for a differential between the local clock time of the first zone player and a local clock time of another zone player; and

when the local clock time of the first zone player reaches the updated at least one future time, engaging in synchronous playback of the corresponding portion of the received audio information with at least the second zone player.

12. A first zone player comprising:

a network interface that is configured to communicatively couple the first zone player to at least one data network;

at least one processor;

a tangible, non-transitory computer-readable medium; and

program instructions stored on the tangible, non-transitory computer-readable medium that are executable by the at least one processor such that the first zone player is configured to perform functions comprising:

receiving, via the network interface, a request to engage in synchronous playback of audio content as part of a synchrony group that includes at least a second zone player that is communicatively coupled to the first zone player via the at least one data network;

after receiving the request to engage in synchronous playback of audio content as part of the synchrony group:

detecting an indication that the first zone player is to operate in (a) one of a control-master mode or a control-slave mode for the synchrony group and (b) one of an audio-master mode or an audio-slave mode for the synchrony group; and

beginning to operate in the synchrony group in accordance with the indication;

wherein, while operating in the control-master mode for the synchrony group, the first zone player is configured to:

receive, via the network interface, first control information for the synchrony group from a network device that is communicatively coupled to the first zone player; and

based on the first control information, cause, via the network interface, at least one playback action to be applied in the synchrony group;

wherein, while operating in the control-slave mode for the synchrony group, the first zone player is configured to:

receive, via the network interface, second control information from another zone player; and

perform one or more playback actions in accordance with the second control information;

wherein, while operating in the audio-master mode for the synchrony group, the first zone player is configured to:

obtain audio information that is representative of the audio content;

generate playback timing information associated with the obtained audio information that is indicative of at least one future time that is relative to a reference clock time and denotes a time at which at least the first and second zone players are to engage in synchronous playback of a corresponding portion of the obtained audio information; and

transmit, via the network interface, the obtained audio information and the generated playback timing information to the second zone player; and

wherein, while operating in the audio-slave mode for the synchrony group, the first zone player is configured to:

receive, via the network interface, audio information and playback timing information associated with the received audio information from another zone player; and

engage in synchronous playback of the received audio information with at least the second zone player based on the received playback timing information associated with the received audio information while a local clock time of the first zone player differs from a local clock time of the second zone player.

13. The first zone player of claim **12**, wherein detecting an indication that the first zone player is to operate in (a) one of a control-master mode or a control-slave mode for the synchrony group and (b) one of an audio-master mode or an

audio-slave mode for the synchrony group comprises detecting an indication that the first zone player is to operate in (a) the control-master mode for the synchrony group and (b) the audio-master mode for the synchrony group.

14. The first zone player of claim **13**, wherein the obtained audio information comprises a beginning of the obtained audio information, and wherein the playback timing further comprises a future time relative to the reference clock time that denotes a time at which at least the first and second zone players are to initiate synchronous playback at the beginning of the obtained audio information.

15. The first zone player of claim **12**, wherein detecting an indication that the first zone player is to operate in (a) one of a control-master mode or a control-slave mode for the synchrony group and (b) one of an audio-master mode or an audio-slave mode for the synchrony group comprises detecting an indication that the first zone player is to operate in (a) the control-slave mode for the synchrony group and (b) the audio-master mode for the synchrony group.

16. The first zone player of claim **15**, wherein the obtained audio information comprises a beginning of the obtained audio information, and wherein the playback timing further comprises a future time relative to the reference clock time that denotes a time at which at least the first and second zone players are to initiate synchronous playback at the beginning of the obtained audio information.

17. The first zone player of claim **12**, wherein beginning to operate in the synchrony group in accordance with the indication comprises either (a) transitioning from operating in the audio-master mode to operating in the audio-slave mode or (b) transitioning from operating in the audio-slave mode to operating in the audio-master mode.

18. The first zone player of claim **12**, wherein the first control information identifies particular audio content to be played back by the synchrony group that is available at an audio source outside of the at least one data network, and wherein causing the at least one playback action to be applied in the synchrony group comprises causing a zone player operating in the audio-master mode to obtain audio information that is representative of the particular audio content.

19. The first zone player of claim **12**, wherein the at least one future time relative to the reference clock time comprise at least one first future time that is determined based on a local clock of a zone player other than the first zone player.

20. The first zone player of claim **12**, wherein at least one future time relative to the reference clock time comprises at least one first future time that is determined based a local clock of the first zone player.

21. The first zone player of claim **12**, wherein the second control information comprises information indicative of a volume adjustment, and wherein performing one or more playback actions in accordance with the second control information comprises adjusting a playback volume of the first zone player.

22. The first zone player of claim **12**, wherein the playback timing information that is received while operating in the audio-slave mode comprises at least one future time at which at least the first and second zone players are to engage in synchronous playback of a corresponding portion of the received audio information, and wherein being configured while operating in the audio-slave mode to engage in synchronous playback of the received audio information with at least the second zone player comprises being configured to:

update the at least one future time to account for a differential between the local clock time of the first zone player and a local clock time of another zone player; and

when the local clock time of the first zone player reaches the updated at least one future time, engage in synchronous playback of the corresponding portion of the received audio information with at least the second zone player.

23. Tangible, non-transitory computer-readable media having instructions stored therein, wherein the instructions, when executed, cause a first zone player to perform functions comprising:

receiving, via a network interface at the first zone player, a request to engage in synchronous playback of audio content as part of a synchrony group that includes at least a second zone player that is communicatively coupled to the first zone player via at least one data network;

after receiving the request to enter into the synchrony group:

detecting an indication that the first zone player is to operate in (a) one of a control-master mode or a control-slave mode for the synchrony group and (b) one of an audio-master mode or an audio-slave mode for the synchrony group; and

beginning to operate in the synchrony group in accordance with the indication;

wherein, while operating in the control-master mode for the synchrony group, the first zone player is configured to:

receive, via the network interface, first control information for the synchrony group from a network device that is communicatively coupled to the first zone player; and

based on the first control information, cause, via the network interface, at least one playback action to be applied in the synchrony group;

wherein, while operating in the control-slave mode for the synchrony group, the first zone player is configured to:

receive, via the network interface, second control information from another zone player; and

perform one or more playback actions in accordance with the second control information;

wherein, while operating in the audio-master mode for the synchrony group, the first zone player is configured to:

obtain audio information that is representative of the audio content;

generate playback timing information associated with the obtained audio information that is indicative of one or more future times relative to a reference clock time, wherein an individual future time denotes a time at which at least the first and second zone players are to engage in synchronous playback of a corresponding portion of the obtained audio information; and

transmit, via the network interface, the obtained audio information and the generated playback timing information to the second zone player; and

wherein, while operating in the audio-slave mode for the synchrony group, the first zone player is configured to:

receive, via the network interface, audio information and playback timing information associated with the received audio information from another zone player; and

engage in synchronous playback of the received audio information with at least the second zone player

based on the received playback timing information associated with the received audio information while a local clock time of the first zone player differs from a local clock time of the second zone player.

24. The tangible, non-transitory computer-readable media of claim **23**, wherein detecting an indication that the first zone player is to operate in (a) one of a control-master mode or a control-slave mode for the synchrony group and (b) one of an audio-master mode or an audio-slave mode for the synchrony group comprises detecting an indication that the first zone player is to operate in (a) the control-master mode for the synchrony group and (b) the audio-master mode for the synchrony group.

25. The tangible, non-transitory computer-readable media of claim **24**, wherein the obtained audio information comprises a beginning of the obtained audio information, and wherein the playback timing further comprises a future time relative to the reference clock time that denotes a time at which at least the first and second zone players are to initiate synchronous playback at the beginning of the obtained audio information.

26. The tangible, non-transitory computer-readable media of claim **23**, wherein detecting an indication that the first zone player is to operate in (a) one of a control-master mode or a control-slave mode for the synchrony group and (b) one of an audio-master mode or an audio-slave mode for the synchrony group comprises detecting an indication that the first zone player is to operate in (a) the control-slave mode for the synchrony group and (b) the audio-master mode for the synchrony group.

27. The tangible, non-transitory computer-readable media of claim **26**, wherein the obtained audio information comprises a beginning of the obtained audio information, and wherein the playback timing further comprises a future time relative to the reference clock time that denotes a time at which at least the first and second zone players are to initiate synchronous playback at the beginning of the obtained audio information.

28. The tangible, non-transitory computer-readable media of claim **23**, wherein beginning to operate in the synchrony group in accordance with the indication comprises either (a) transitioning from operating in the audio-master mode to operating in the audio-slave mode or (b) transitioning from operating in the audio-slave mode to operating in the audio-master mode.

29. The tangible, non-transitory computer-readable media of claim **23**, wherein the first control information identifies particular audio content to be played back by the synchrony group that is available at an audio source outside of the at least one data network, and wherein causing the at least one playback action to be applied in the synchrony group comprises causing a zone player operating in the audio-master mode to obtain audio information that is representative of the particular audio content.

30. The tangible, non-transitory computer-readable media of claim **23**, wherein an individual future time relative to the reference clock time comprise at least one first future time that is determined based on a local clock of a zone player other than the first zone player.

31. The tangible, non-transitory computer-readable media of claim **23**, wherein the at least one an individual future time relative to the reference clock time comprise at least one first future time that is determined based on a local clock of the first zone player.

32. The tangible, non-transitory computer-readable media of claim **23**, wherein the second control information comprises information indicative of a volume adjustment, and wherein performing one or more playback actions in accordance with the second control information comprises adjusting a playback volume of the first zone player.

33. The tangible, non-transitory computer-readable media of claim **23**, wherein the playback timing information that is received while operating in the audio-slave mode comprises at least one future time at which at least the first and second zone players are to engage in synchronous playback of a corresponding portion of the received audio information, and wherein operating in the audio-slave mode to engage in synchronous playback of the received audio information with at least the second zone player comprises:

updating the at least one future time to account for a differential between the local clock time of the first zone player and a local clock time of another zone player; and

when the local clock time of the first zone player reaches the updated at least one future time, engaging in synchronous playback of the corresponding portion of the received audio information with at least the second zone player.

* * * * *

UNITED STATES PATENT AND TRADEMARK OFFICE

CERTIFICATE OF CORRECTION

PATENT NO. : 11,080,001 B2
APPLICATION NO. : 13/864249
DATED : August 3, 2021
INVENTOR(S) : Nicholas A. J. Millington

It is certified that error appears in the above-identified patent and that said Letters Patent is hereby corrected as shown below:

In the Claims

In Claim 1, at Column 37, Lines 66-67, please delete "after receiving the request to enter into the synchrony group" and replace it with -- after receiving the request to engage in synchronous playback of audio content as part of the synchrony group --

In Claim 23, at Column 42, Lines 20-21, please delete "after receiving the request to enter into the synchrony group" and replace it with -- after receiving the request to engage in synchronous playback of audio content as part of the synchrony group --

Signed and Sealed this
Thirteenth Day of August, 2024

Katherine Kelly Vidal

Katherine Kelly Vidal
Director of the United States Patent and Trademark Office