Archive of SID

Iranian Journal of Science & Technology, Transaction B: Engineering, Vol. 34, No. B6, pp 605-618
Printed in The Islamic Republic of Iran, 2010
© Shiraz University

ENHANCEMENT OF MICRO-GRID DYNAMIC PERFORMANCE SUBSEQUENT TO ISLANDING PROCESS USING STORAGE BATTERIES*

RASHAD M. KAMEL AND B. KERMANSHAHI**

Dept. of Environmental & Energy Engineering, Tokyo University of Agriculture & Technology, Tokyo, Japan
Email: bahman@cc.tuat.ac.jp

Abstract– Recently, several types of Distributed Generators (DGs) have been connected together to form a small power system called a micro grid (MG). MG usually operates in normal connecting mode and is connected to the main grid. If a fault occurs in the main grid, MG will transfer immediately to the islanding mode. This paper developed a complete model which can simulate, in detail, the dynamic performance of the MG during and subsequent to islanding occurrence. The developed model is used to investigate the effect of using storage batteries for enhancing MG dynamic performance during all modes. Two cases are studied, the first case discusses the effect of the islanding process on the frequency, voltages and active powers of all micro sources when there are no storage batteries installed inside the MG. The second studied case investigates the effect of islanding occurrence on the MG performance when MG is equipped with two storage batteries. In the two studied cases, wind speed and irradiance vary continuously. Results proved that the existence of storage batteries led to dramatic improvement in the dynamic performance of the MG during subsequent islanding occurrence. Also, MG performance, when exposed to a severe disturbance, led to an unacceptable frequency drop is studied and load shedding strategy activation during this situation is also highlighted.

Keywords– MG, dynamic performance, islanding, micro sources, inverter, storage batteries and load shedding

1. INTRODUCTION

Micro-scale Distributed Generators (DGs), or micro sources, are being increasingly applied to provide electricity for the expanding energy demands in the network. The development of micro DGs also help to reduce green house gas emissions and increase energy efficiency [1]. MG usually consists of a cluster of micro DGs, the energy storage system (e.g. flywheel, batteries…) and loads, operating as a single controllable system. The architecture of the MG is formed to be radial with a few feeders. It often provides both electricity and heat to the local area. It can be operated in both grid-connected mode and islanded mode. From the customer point of view, MG provides both thermal and electricity needs, in addition to enhancing local reliability, reducing emissions, and improving power quality by supporting voltage and reducing voltage dip. From the utility point of view, application of distributed energy sources can potentially reduce the demand for distribution and transmission facilities [2]. Clearly, distributed generation located close to loads will reduce flows in transmission and distribution networks with two important effects: loss reduction and ability to potentially substitute for network assets. Further, the presence of generation close to demand could increase service quality seen by end users. MG can provide network support in times of stress by relieving congestion and aiding restoration after a fault [2].

*Received by the editors July 20, 2008; Accepted October 24, 2010.
**Corresponding author

www.SID.ir

GENERAC 1006

Archive of SID

The development of MG can contribute to the reduction of the emissions and the mitigation of climate changes. This is because available and currently developing technologies for distributed generation units are based on renewable sources and micro sources that are characterized by very low emissions [2]. The new micro sources technologies (e.g. micro gas turbine, fuel cells, photovoltaic system and several kinds of wind turbines) used in MG are not suitable for supplying energy to the grid directly [3-4]. They have to be interfaced with the grid through an inverter stage. Thus, using power electronic interfacing in the MG leads to a series of challenges in the design and operation of the MG [5].

Technical challenges associated with the operation and control of MG are immense. Ensuring stable operation during network disturbances, and maintaining stability and power quality in the islanding mode of operation requires the development of sophisticated control strategies for MG's inverters in order to provide stable frequency and voltage in the presence of arbitrarily varying loads. This paper aims to demonstrate the effect of using storage batteries to improve the dynamic behavior of the MG during and subsequent to islanding occurrence. Also, using load shedding strategy if the disturbance results in unacceptable deviation in MG frequency.

General overview

Reference [6] discussed MG autonomous operation during and subsequent to the islanding process, but the renewable micro sources are not included. In references [7] and [8] a control scheme based on droop concepts to operate inverters feeding a standalone AC system is presented. References [9] and [10] discussed the behavior of distributed generator (DGs) connected to distribution networks, however, the dynamics of the primary energy sources have not been considered, and does not allow obtaining the full picture of the MG long-term dynamic behavior, which is largely influenced by the micro sources dynamics.

This manuscript developed a complete model to simulate the dynamic performance of the MG during and subsequent to the islanding process. Our previous research [11] and [12], developed a model for all MG components, but each component operates in stand-alone mode. Reference [11] developed a detailed model for the inverter with three different control schemes. Reference [12] developed models for the micro sources existing in the MG (micro turbine, fuel cell, wind turbine and photovoltaic panel). This paper collects all individual models developed in references [11] and [12] in one complete model and applied a suitable control which can arrange the operation of all models simultaneously. The developed model is general and can be used to study any disturbance that may occur in the MG.

The rest of the paper is organized as follows: section 2 illustrates a single line diagram of the studied MG. Section 3 gives a brief description of all MG components models developed in references [11] and [12]. Section 4 presents a description of the developed model with all applied controls. All studied cases with results and discussions are explained in section 5. Conclusions are presented in section 6.

2. ARCHITECTURE OF THE STUDIED MG

Figure 1 shows a single line diagram of the studied MG. It consists of 7 buses. The flywheel with a 25 kW rating is connected at bus 1. Wind generation system (15kW) is connected to bus 2. Two photovoltaic panels with 10 kW and 3 kW ratings are connected to buses 4 and 5, respectively. Single shaft micro turbine (SSMT) with a rating of 30 kW is connected to bus 6. Bus 7 is provided with Solid Oxide Fuel Cell (SOFC) with a rating of 30 kW. Loads and line parameters for MG can be found in reference [13].

www.SID.ir

Archive of SID

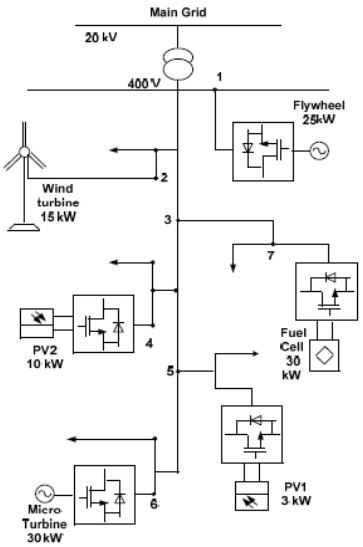

Fig. 1. Single line diagram of the studied MG

3. DESCRIPTION OF ALL MG COMPONENTS MODELS

a) Inverter models

Reference [11] developed three different control models for inverters used to interface micro sources to MG. The first model is the *PQ* model which controls active and reactive powers injected by the inverter in the MG. This model is suitable for interfacing SSMT, SOFC and photovoltaic panels.

Figure 2a shows a block diagram of the *PQ* inverter model. The input terminals are active and reactive powers produced by the micro source, and the output terminals are the three phase terminals connected to the MG. The second model is the *PV* model which controls the active power injected by the inverter and keeps voltage at a constant value as shown in Fig. 2b. The third model is the *Vf* model which keeps voltage at a constant value and returns frequency to its nominal value after disturbance by controlling the amount of active power injected in the MG. The *Vf* inverter is used to interface the flywheel to the MG and represents the reference bus (slack bus) of the MG during and subsequent to islanding as shown in Fig. 2c.

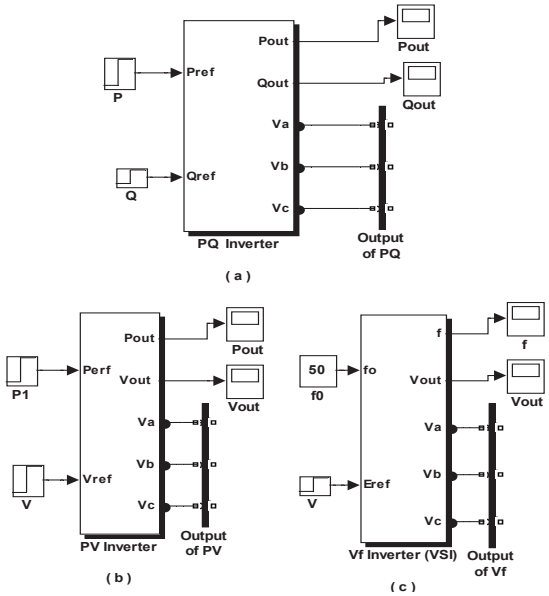

Fig. 2. Inverter control models

www.SID.ir

Archive of SID

b) Micro sources models

Through this study, detailed stand alone models for the micro turbine, fuel cell, photovoltaic panels and wind generation system are described in the following subsections. More details about micro sources modeling can be found in references [14-21].

1- Micro turbine model: Figure 3a shows the block diagram of single shaft micro turbine developed model. Input terminal P_{ref} represents the desired power. The output terminal is P_e (electrical power output from synchronous generator which coupled with micro turbine). P_e is coupled to the P input terminal of the PQ inverter.

2- Solid oxide fuel cell (SOFC) model: Figure 3b shows the block diagram of the fuel cell developed model. Input terminals are P_{ref} (desired power) and rated voltage (V_{rated}). The output terminal is P_e, which represents the electrical power output from the fuel cell. This terminal is applied to the P input terminal of the PQ inverter.

3- Photovoltaic model: The photovoltaic developed model is shown in Fig.3c. The input terminals are Irradiance G_a $[W/m^2]$ and ambient temperature T_a [Kelvin]. In this study, maximum power point tracking (MPPT) is included inside the model. The output terminal is P_{max}, which represents the maximum output power developed by photovoltaic panel. This terminal is coupled to the input terminal of the PQ inverter. In the two studied cases, irradiance is assumed continuously varying.

4- Wind generation system model: Wind generation system developed model is shown in Fig.3d. The wind turbine is coupled to a squirrel cage induction generator. The input terminals of the wind turbine are the wind speed (m/sec.) and pitch angle of the turbine blades (degree). The output terminal of the wind turbine is the mechanical torque (T_m) which is coupled to the shaft of the induction generator. Terminals of the induction generator are connected directly to the MG. In the two studied cases, the wind speed changes continuously. The values of actual wind speed are shown in Fig. 16 at the end of the paper.

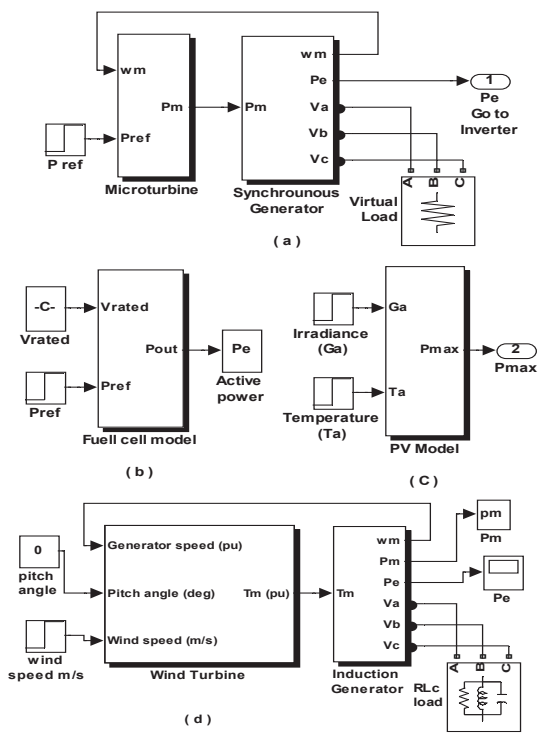

Fig. 3. Micro sources stand-alone models

www.SID.ir

Archive of SID

4. COMPLETE MODEL DESCRIPTION

Operation of MG with several *PQ* inverters and a single voltage source inverter (*Vf*) is similar to the operation of MG with the synchronous machine as a reference bus (slack bus). The *Vf* inverter provides the voltage reference for the operation of all *PQ* inverters when the MG is isolated from the main power supply. Acting as a voltage source, the *Vf* inverter requires a significant amount of storage capability in the DC link or a prime power source with a very fast response in order to maintain the DC link voltage constant. In other words, the power requested by *Vf* inverter needs to be available almost instantaneously in the DC link. In fact, this type of behavior actually models the action of the flywheel system. Flywheel was considered to exist at the DC bus of the *Vf* inverter to provide the required instantaneous power. The *Vf* inverter is responsible for fast load-tracking during transients and for voltage control. During normal operation conditions (stable frequency at nominal value), the output active power of the Vf inverter is nearly zero; only reactive power is injected into the MG for voltage control.

a) Control of active power in each micro source

During islanding mode, when an imbalance between load and local generation occurs, the MG frequency drifts from its nominal value. Storage devices (flywheel in our case) would keep injecting power into the network as long as the frequency differed from the nominal value. The micro turbine and fuel cell are controllable micro sources whose power output can be controlled. A Proportional Integral Proportional Integral (PI) controller (input of this controller is the frequency deviation) acting directly on the primary machine (P_{ref} of fuel cell and micro turbine) helps and allows frequency restoration. After frequency restoration, storage devices will operate again at the normal operating point (zero active power output). This controller cannot be applied to wind turbine and photovoltaic panels because those micro sources are uncontrollable sources and their output powers depend on the weather conditions (wind speed, irradiance and temperature). Figure 4 represents a Proportional Integral (PI) controller which is used to adapt (increase or decrease) the active power of the controllable micro sources (Fuel cell and Micro turbine). When islanding occurs from the main grid, there is a deviation in the MG frequency from its nominal value (50 Hz). This deviation is processed through the PI controller shown in Fig. 4 to increase or decrease powers produced by controllable micro sources (fuel cell and micro turbine) and return the MG frequency to its nominal value and sequently the power injected by the flywheel to its value before islanding (usually zero).

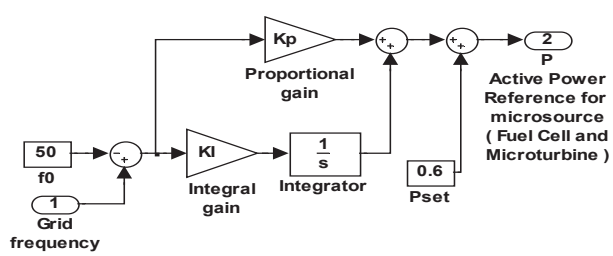

Fig. 4. Control of active power in controllable micro sources

b) Reactive power-voltage control

Figure 5 describes the adopted voltage control strategy. Knowing the network characteristics, it is possible to define the maximum voltage droop. To maintain the voltage between acceptable limits, the *Vf* inverter connected to the flywheel will adjust the reactive power in the network. It will inject reactive power if the voltage falls under the nominal value and absorb reactive power if the voltage rises over its nominal value.

www.SID.ir

Archive of SID

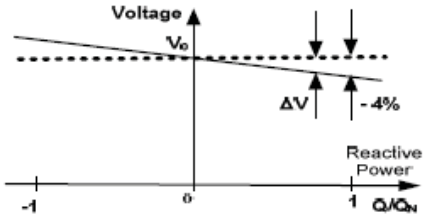

Fig. 5. Voltage droop control of the Vf inverter terminal

c) Active power-frequency control

The transition to the islanded operation mode and the operation of the network in islanded mode requires micro generation sources to particulate in active power-frequency control, so that generations can match loads. During this transient period, the participation of the storage devices (flywheel) in system operation is also very important, since the system has very low inertia, and some micro sources (micro turbine and fuel cell) have a very slow response to the request of an increase in power generation. As already mentioned, the power necessary to provide appropriate load-following is obtained from storage devices (flywheel). Knowing the network characteristics, it is possible to define the maximum frequency droop as shown in Fig. 6. To maintain the MG's frequency between acceptable limits, the Vf inverter connected to the flywheel will adjust the active power in the network. It will inject active power if the frequency falls below the nominal value and will absorb active power if the frequency rises over its nominal value.

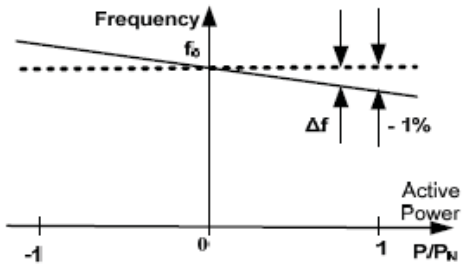

Fig. 6. Frequency droop control of Vf inverter

d) Battery model and contribution for control

Since batteries are energy storage devices, they will provide active power to MG to compensate for fast load changes. From this point of view, the role of batteries can be regarded as a finite source of energy. This energy will be injected into the network following a request from an active power/ frequency control unit.

If the load is larger than the generation, the system frequency will decrease. Generation must then be increased to restore frequency to its nominal value. This will be done by acting on the prime power sources of each controllable micro source. If the primary machine of the micro source is not able to provide the required power, especially during the initial transient period, batteries can help by providing the remaining power. In this case, frequency deviation is considered as the control variable of the power that will be delivered by batteries, as shown in Fig. 7a.

The battery response is controlled according to the block diagram of Fig. 7b. In the second studied case, MG is equipped with two storage batteries. The first battery is connected to the DC bus of the micro turbine inverter at bus# 6, while the second battery is connected to the DC bus of the fuel cell inverter at bus #7 in Fig. 1.

www.SID.ir

Archive of SID

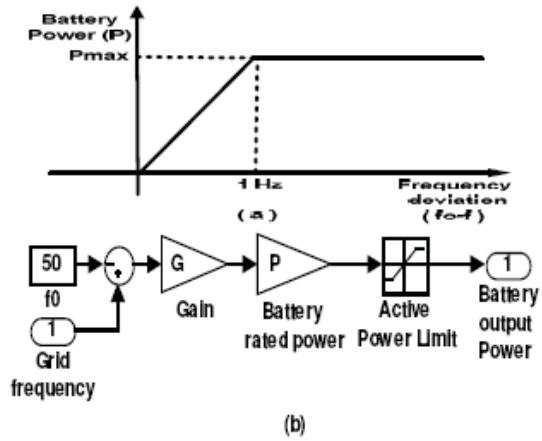

Fig. 7. Battery dynamic block diagram

e) Load shedding strategy

If the disturbance which occurs in MG is a huge disturbance and leads to a high drop in the MG frequency, load shedding strategy is the last choice that should be employed to maintain MG stability during the islanding mode. The controllable loads (loads can be shedding and reconnecting) play an important role under some conditions of the MG, namely those concerning the imbalance between the load and generation (load larger than generation). In order to deal with this problem, a load-shedding scheme is implemented to aid frequency restoration to its nominal value after the islanding of the MG. The philosophy adopted in this study is based on the amplitude of the frequency deviation.

Load-shedding is used as a remedy against long and strong frequency excursions. Basically, the dynamic behavior of the system is improved if some percentage of the load is temporarily lost, allowing the micro sources with frequency regulation functions (controllable micro sources like fuel cell and micro turbine) to react with the frequency deviation. The benefits derived from such a scheme are well-known, particularly in what concerns a rapid reaction following a large frequency deviation leading to a faster stabilization of the system and the restoration of the frequency to its nominal value [1]. The implementation adopted in this paper uses four steps of load shedding, each one corresponding to a certain deviation in the system's frequency and a load reconnection implemented in small steps after frequency improvement. Table 1 shows the maximum frequency deviation that corresponds to a specific percentage of load-shedding (relative to the total load of the MG).

Table1. Load-shedding parameters

Frequency deviation (Hz)	Percentage of load shedding (% of MG total load)
0.5	20
0.75	20
1	30
1.25	30

To avoid the load-shedding action when the frequency deviation has a very short duration, a delay is implemented in order to allow the load-shedding activation only if the frequency deviation is sustained for a time interval larger than Δt (which can be controlled). This interval is taken 2 sec. in our case.

To avoid large frequency deviations during the load reconnection (after the frequency improvement), it was assumed that it is possible to define a certain number of steps for load reconnection. This number of steps is variable and depends on the percentage of load-shedding. For example, if the overall percentage of

www.SID.ir

Archive of SID

load shedding is 20% (one step of the load-shedding was activated), the load reconnection procedure occurs in two steps of 10 % of the total load (with a controlled time interval in between). If the percentage of the load-shedding is 40 % (two steps of the load-shedding was activated), the load reconnection procedure occurs in four steps of 10 % of the total load. Table 2 shows the full details of the implementation.

Table 2. Load reconnection parameters

Steps activated in load-shedding	Load reconnections
1	2 steps of 10 % of the total load (with a time interval of 15 sec.)
2	4 steps of 10 % of the total load (with a time interval of 15 sec.)
3	6 steps of 11.66 % of the total load (with a time interval of 15 sec.)
4	8 steps of 12.5 % of the total load (with a time interval of 15 sec.)

f) Complete model

A complete model which collects all micro sources models, all inverters models and all control strategies described in the previous sections is developed. This model is a general model and can be used to describe any disturbance which may occur in the MG.

5. RESULTS AND DISCUSSIONS

In simulation platform, the two *PV* panels, the SOFC and the SSMT are associated with a *PQ* inverter type. As the inverter control is quite fast and precise, it is possible to neglect the DC link voltage fluctuations; if losses are also neglected, the output active power of the PQ inverter becomes equal to the output power of the associated micro source. The flywheel is connected to the *Vf* inverter. The following two studied cases are necessary to indicate how the dynamic performance of the MG can be enhanced if the MG is equipped with storage batteries.

a) MG performance with and without storage batteries

Case 1: MG imports active and reactive powers from the main grid and not equipped with storage batteries

During this case, the amount of active power and reactive power generated from micro sources are adjusted to force the MG imports 15 kW and 16 kVAR from the main grid. After finding suitable control parameters for the Vf inverter, the disconnection of the upstream main grid was simulated at t=60 sec. and the simulation results were presented for the main electrical quantities (frequency, voltages, and active powers). The wind speed and irradiance continuously change during the simulation time.

Case2: MG imports active and reactive powers from the main grid and equipped with two storage batteries

In this case, MG is at the same conditions of the first case, except that two storage batteries are connected to the MG network. The first battery is connected at the DC bus of the micro turbine inverter, while the second is connected at the DC bus of the fuel cell inverter. The disconnection of the upstream main grid was simulated at t=60 sec. and the simulation results are shown in the following figures for the two cases.

www.SID.ir

Archive of SID

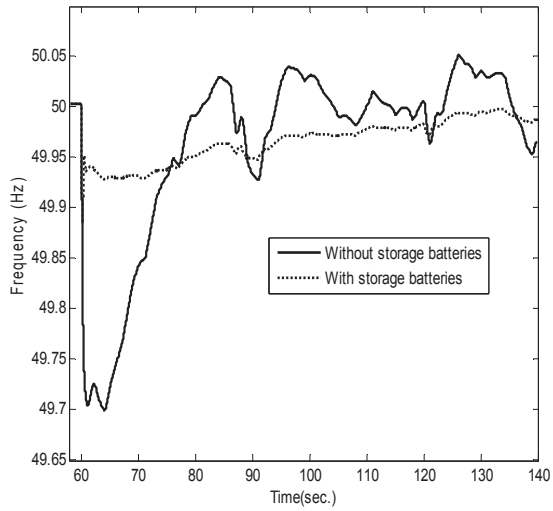

Fig. 8. MG frequency with and without storage batteries

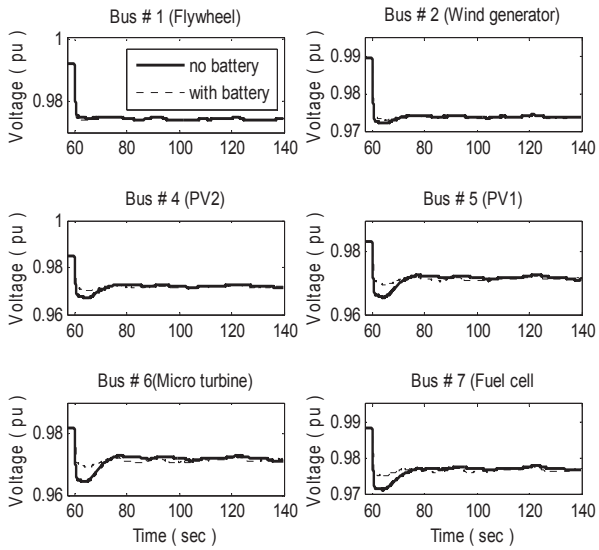

Fig. 9. Volatges at all micro sources buses

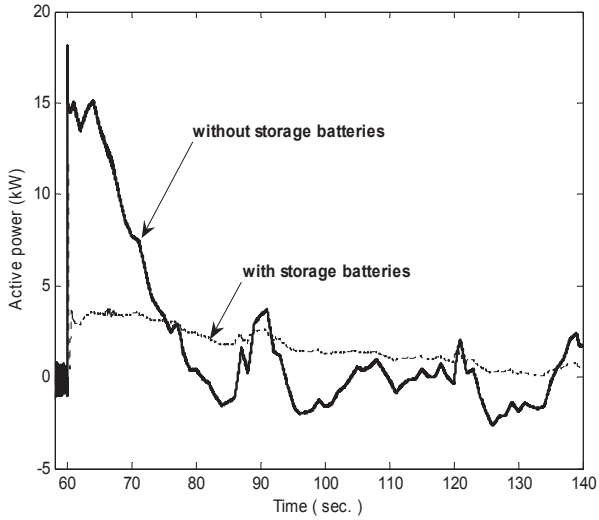

Fig. 10. Flywheel (Vf) injected active powers

www.SID.ir

Archive of SID

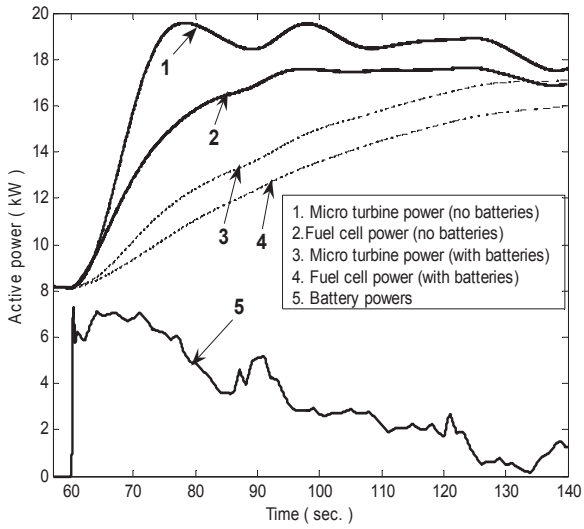

Fig. 11. Active power of SSMT, SOFC and batteries

From the previous figures (Figs.8-11), sequences of the events can be interpreted as follows:

- Before islanding occurrence, MG operates at its steady state and imports active and reactive powers from the main grid. Frequency is at its nominal value (50 Hz) as shown in Fig. 8.
- After islanding occurring at t=60sec, the MG's loads are larger than the micro sources generated power, while MG frequency dropped to about 49.7Hz when there were no batteries installed in MG. On the other hand, when MG is equipped with two storage batteries, frequency dropped to about 49.94 Hz only due to power injected by the storage batteries.
- The difference between load power and generated power must be injected by the *Vf* inverter connected to the flywheel as shown in Fig. 10. The amount of active power injected by the flywheel in the case with the storage batteries is much smaller than the amount of active power injected by the flywheel in the case without using storage batteries (3 kW compared with 15 kW). From this fact, in the case with using storage batteries, the *Vf* inverter which is connected to the flywheel injects a small amount of active power and can inject a large amount of reactive power and support the voltages at all MG's buses.
- The variations of powers generated by the wind generation system and photovoltaic panels (due to change of wind speed and solar irradiance) are also compensated by power injected by the storage batteries as shown in Fig. 11, and the fluctuations in the frequency is small compared with the case without storage batteries as shown in Fig. 8.
- Voltages at the two buses in which batteries are connected (buses 6 and 7) are improved. This is because MG is a low voltage network (more resistive network) and voltages increase with active power injection.
- The required ratings of controllable micro sources (SSMT and SOFC) when using storage batteries are smaller than ratings required when batteries do not exist, as shown in Fig. 11.
- Due to small deviations of the frequency in the case with storage batteries, the power generated by the fuel cell and micro turbine has very slow ramp up rates as shown in Fig. 11.
- At the instant in which the power generated by the micro sources is equal to the power demanded by the loads, the active powers injected by flywheel and batteries reach nearly zero and the frequency returns to its nominal value.
- Due to very slow ramp up rates of power generated by the controllable micro sources (fuel cell and micro turbine) MG needs about 70 sec. to restore its steady state.

www.SID.ir

Archive of SID

- Comparing results of the two cases indicates how storage batteries can help in MG dynamic performance enhancement.

b) MG Performance with load shedding strategies employed if the frequency dropped to an unacceptable value

MG investigated in this section has the same architecture of the MG investigated in the previous section which is shown in Fig. 1, except the present MG is heavy loaded. Additional loads (15kW and 10 kVAr) are connected at the terminal of bus #3 which make the MG heavy loaded (imports 31.5 kW from the main grid at the instant of islanding). The MG dynamic performance is investigated under two cases. The first case is the investigation of the dynamic response of the MG in the islanding mode when load-shedding strategy is employed and activated subsequent frequency dropping than the predefined threshold value. This case is compared with the dynamic performance of MG under the same conditions except that load-shedding strategy is not employed in MG. Results proved that the load-shedding strategy can greatly improve the MG performance following a huge deviation in frequency due to islanding occurrence. This is indicated in the following figures.

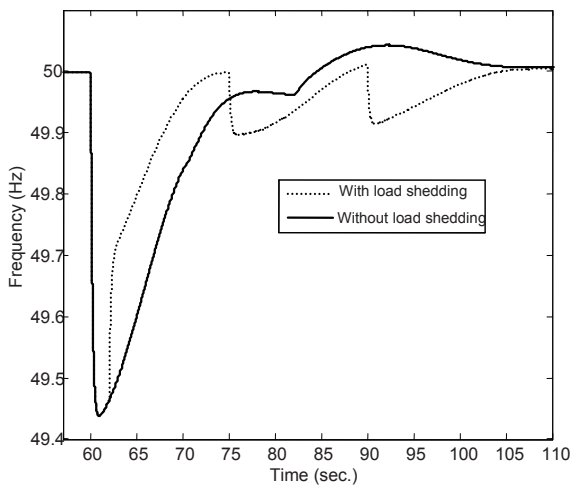

Fig. 12. MG frequency with and without load-shedding

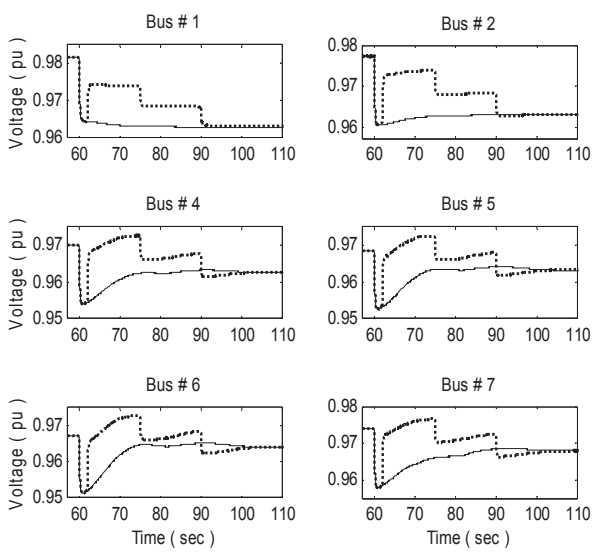

Fig. 13. Voltages of all micro sources buses

www.SID.ir

Archive of SID

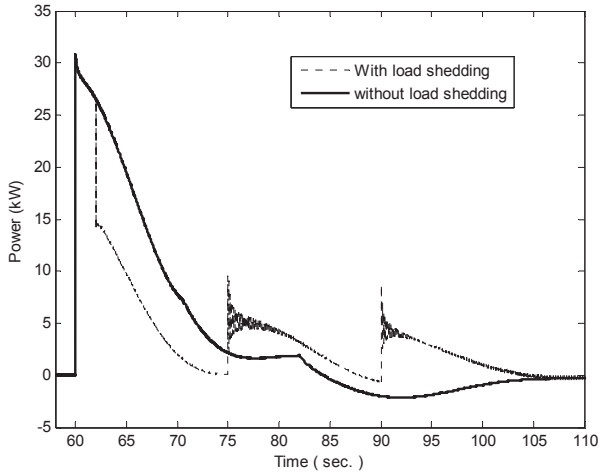

Fig. 14. Active power injected by flywheel

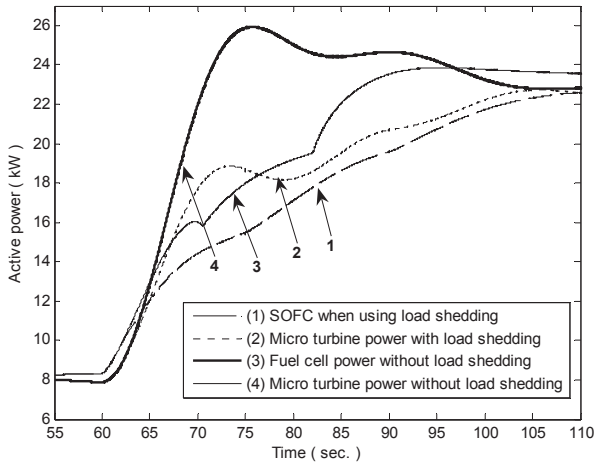

Fig. 15. Active power of micro turbine and fuel cell

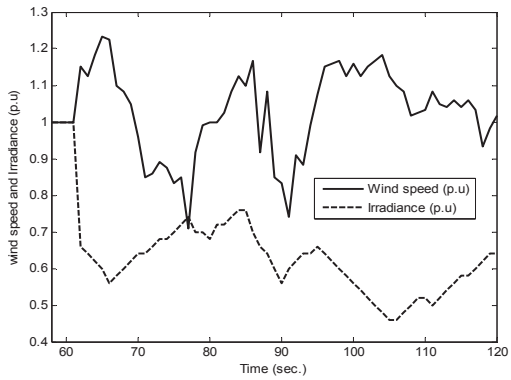

Fig. 16. Wind speed and Irradince values used in the simulation

From the results shown in the previous figures, the following points can be summarized:

- Islanding occurred at t=60 sec. Due to heavy loads in MG, frequency drooped to about 49.45 Hz as shown in Fig. 12. In the first case, load shedding is activated (after 2 sec. from frequency dropping) which leads to frequency rising at the same instant (t=62 sec.) to about 49.7 Hz. Controllable micro

www.SID.ir

Archive of SID

sources (fuel cell and micro turbine) start to raise their generations and deal with the situation as shown in Fig. 15.

- Due to load-shedding, voltages at all MG buses are also improved (nearly to the value before islanding occurrence) as shown in Fig.13. Active power injected by the flywheel is also reduced as shown in Fig. 14.This means small energy capacity flywheel (kWh) can be used when the load shedding strategy is employed in MG.
- When the frequency is restored to nearly its nominal value (at t=75 sec.), load reconnection strategy restores the first step of the load and causes a small drop in the frequency (49.9Hz). After 15 sec. from the first step of load reconnection, the second step of the load is restored at t=90sec. which also leads to a small drop in frequency (49.9 Hz as shown in Fig. 12). At each step of load reconnection, the *Vf* inverter connected to the flywheel instantaneously responds to the load reconnection (Fig. 14) until the controllable micro sources adjust their generation and deal with the situation.
- On the other hand, when load shedding strategy is not employed in MG, frequency takes a long time to reach an acceptable level, which is not acceptable by many sensitive loads installed inside the MG.
- In conclusion, load shedding strategy is very important if the MG frequency droops more than a certain limit.

6. CONCLUSION

This paper discusses the effects of existing storage batteries on the transient dynamic response of the MG during and subsequent to islanding process. The paper develops a complete model which can describe the dynamic behavior of MG. All MG's components are modeled in detail. Two cases are studied; the first case investigated the dynamic performance of the MG during and subsequent islanding when the MG had no storage batteries. The second case also described the transient dynamic response of the MG when it is equipped with two storage batteries. The results showed that the existence of storage batteries in the MG reduced frequency deviation and voltage drop subsequent to islanding occurrence. Frequency in the second case dropped to 49.94 Hz compared with 49.7 Hz in the first case. The voltages dropped to 97.8% compared with 95.8% in the first case. The amount of active power injected by the flywheel is small in the second case compared with the first case. Performance of MG under severe frequency drop was studied and load shedding strategy was activated to keep the MG's stability during that situation. The results proved that load shedding strategy is very important if the MG frequency drops below certain unacceptable limits. In conclusion this paper provides MG designers with a full picture of how the storage batteries and load shedding strategy can be employed to improve the dynamic performance of the MG and maintain MG stability, and in addition, prevent high frequency and voltage drops, especially if MG feeds critical and sensitive loads.

REFERENCES

1. Lopes, J. P. et al (2004). DD1-Emergency strategies and algorithms, Micro-grids project deliverable of task DD1. Available at http://microgrids.power.ece.ntua.gr.
2. Kanellos, F. D., Tsouchinkas, A. I. & Hatziargyriouo, N. D. (2005). Micro-grid simulation during grid-connected and islanded modes of operation. *Presented at the International Conference on Power Systems Transients (IPST'05) in Montreal*, Canada, paper No. IPST05-113.
3. Hajimiragha, A. (2005). *Generation control in small isolated power systems*. Master Thesis, Royal Institute of Technology, Department of Electrical Engineering, Stockholm 2005.
4. Pecas Lopes, J. A., Moreira, C. L. & Madureira, A. G. (2006). Defining control strategies for micro grids islanded operation. *IEEE Trans. Power Sys*., Vol. 21, No.2, pp. 916-924.

www.SID.ir

Archive of SID

5. Barsali, S. et al. (2002). Control techniques of dispersed generators to improve the continuity of electricity supply. *Proc. PESWinter Meeting*, Vol. 2, pp. 789–794.
6. Katiraei, F., Irvani, M. R. & Lehn, P. W. (2005). Micro-grid autonomous operation during and subsequent to islanding process. *IEEE Trans. Power Del*., Vol. 20, No.1, pp. 248-257.
7. Lasseter, R. & Piagi, P. (2000). Providing premium power through distributed resources. *Proc. 33rd Hawaii Int. Conf. system science*, Vol. 4.
8. Chandorker, M. C., Divan, D. M. & Adapa, R. (1993). Control of parallel connected inverters in standalone AC supply system. *IEEE Trans. Ind. Appl*., Vol. 29, No.1, pp.136-143.
9. Tran-Quoc, T. et al. (2004). Dynamics Analysis of an insulated distribution network. *Proc. IEEE Power System Conf. Expo*., Vol. 2, pp.815-821.
10. Caldon, R., Rossetto, F. & Turri, R. (2003). Analysis of dynamic performance of dispersed generation connected through inverters to distribution networks. *Proc. 17th Int. Conf. Electricity Distribution*, Barcelona, Spain, pp. 12-15.
11. Kamel, R. M. & Nagasaka, K. (2009). Design and implementation of various inverter controls to interface distributed generators (DGs) in micro grids. *Japan Society of Energy and Resources*, pp. 61-64, Tokyo, Japan.
12. Kamel, R. M. & Nagasaka, K. (2009). Micro-grid dynamic performance subsequent to islanding process. *Japan Society of Energy and Resources*, pp. 65-68, Tokyo, Japan.
13. European Research Project Micro Grids [Online]. Available at:http://microgrids.power.ece.ntua.gr/
14. Thounthong, P., Rael, S. & Davat, B. (2007). Control strategy of fuel cell and supercapacitors association for a distributed generation system. *IEEE Trans. on Industrial Electronics*, Vol. 54, No. 6, pp. 3225-3233.
15. Gebregergis, A., Pillay, P., Bhattacharyya, D. & Rengaswemy, R. (2009). Solid oxide fuel cell modeling. *IEEE Trans. on Industrial Electronics*, Vol. 56, No. 1, pp. 139-148.
16. Kwon, J. M., Kim, E. H., Kwon, B. H. & Nam, K. H. (2009). High-efficiency fuel cell power conditioning system with input current ripple reduction. *IEEE Trans. on Industrial Electronics*, Vol. 56, No.3, pp. 826-834.
17. Padullés, J., Ault, G. W. & McDonald, J. R. (2000). An integrated SOFC plant dynamic model for power systems simulation. *J. Power Sources*, Vol. 86, No. 1-2, pp. 495–500.
18. Kanellos, F. D., Tsouchnikas, A. I. & Hatziargyriou, N. D. (2005). Micro-grid simulation during grid-connected and islanded modes of operation. *Presented at the International Conference on Power Systems Transients (IPST'05)* Montreal, Canada, Paper No. IPST05–113.
19. Soroudi, R. & Ehsan, M. (2010). Multi-objective planning model for integration of distributed generations in deregulated power systems. *Iranian Journal of Science & Technology, Transaction B: Engineering*, pp. 307-324.
20. Porkar, S., Abbaspour-Tehrani-Fard, A., Poure, P. & Saadate, S. (2010). A multistage model for distribution expansion planning with distributed generation in a deregulated electricity market. *Iranian Journal of Science & Technology, Transaction B: Engineering*, pp. 275-287.
21. Rokrok, E. & Hamedani Golshan, M. E. (2009). Comprehensive control scheme for an inverter-based distributed generation unit. *Iranian Journal of Science & Technology, Transaction B: Engineering*, pp. 477-490.

www.SID.ir