US010879727B1

(12) **United States Patent**
Cooper

(10) **Patent No.: US 10,879,727 B1**
(45) **Date of Patent: Dec. 29, 2020**

(54) **POWER SOURCE LOAD CONTROL**

(76) Inventor: **James Carl Cooper**, Incline Village, NV (US)

(*) Notice: Subject to any disclaimer, the term of this patent is extended or adjusted under 35 U.S.C. 154(b) by 1646 days.

(21) Appl. No.: **13/481,804**

(22) Filed: **May 26, 2012**

Related U.S. Application Data

(60) Provisional application No. 61/490,253, filed on May 26, 2011, provisional application No. 61/552,722, filed on Oct. 28, 2011, provisional application No. 61/598,564, filed on Feb. 14, 2012, provisional application No. 61/624,360, filed on Apr. 15, 2012.

(51) **Int. Cl.**
H02J 9/00 (2006.01)
H02J 1/00 (2006.01)
H02J 3/00 (2006.01)

(52) **U.S. Cl.**
CPC . ***H02J 9/00*** (2013.01); *H02J 1/00* (2013.01); *H02J 3/00* (2013.01)

(58) **Field of Classification Search**
CPC H02J 1/10; H02J 3/00; H02J 9/066; H02J 9/08; H02J 1/00; H02J 9/00; Y10T 307/438; Y10T 307/636
USPC 307/29, 68
See application file for complete search history.

(56) **References Cited**

U.S. PATENT DOCUMENTS

5,914,467 A 6/1999 Jonas et al.
6,172,432 B1 * 1/2001 Schnackenberg H02J 9/066 307/23
6,181,028 B1 1/2001 Kern et al.
6,285,178 B1 9/2001 Ball et al.
6,313,632 B1 11/2001 Kojovic et al.
6,671,586 B2 12/2003 Davis et al.
6,686,547 B2 2/2004 Kern et al.
6,891,478 B2 5/2005 Gardner
7,015,599 B2 * 3/2006 Gull H02J 3/005 307/64
7,053,497 B2 5/2006 Sodemann et al.
7,208,850 B2 4/2007 Turner
7,338,364 B2 3/2008 Baerlocher et al.
7,356,384 B2 4/2008 Gull et al.
7,379,778 B2 5/2008 Hayes et al.
(Continued)

OTHER PUBLICATIONS

Schneider Electric, 8910DPA92V02 Product Data Sheet, copyright 2011.

(Continued)

Primary Examiner — Rexford N Barnie
Assistant Examiner — Joseph N Inge

(57) **ABSTRACT**

A method and apparatus for controlling the load presented to one or more power sources such as a power grid, backup power generator or solar panel is described. By selectively connecting, disconnecting, limiting and controlling various loads which are powered, the power grid service connection and power sources may be economically sized and operated while allowing reliability and convenience in selecting and powering loads. The control of the loads connected to the power sources is prioritized by various parameters including the power source operation parameters including load handling capability, type of load, load size, environmental factors, load usage during and subsequent to load connection, load priority and operator wishes. The control may also operate to facilitate transfer of power from one power source or load to another power source or load.

62 Claims, 9 Drawing Sheets

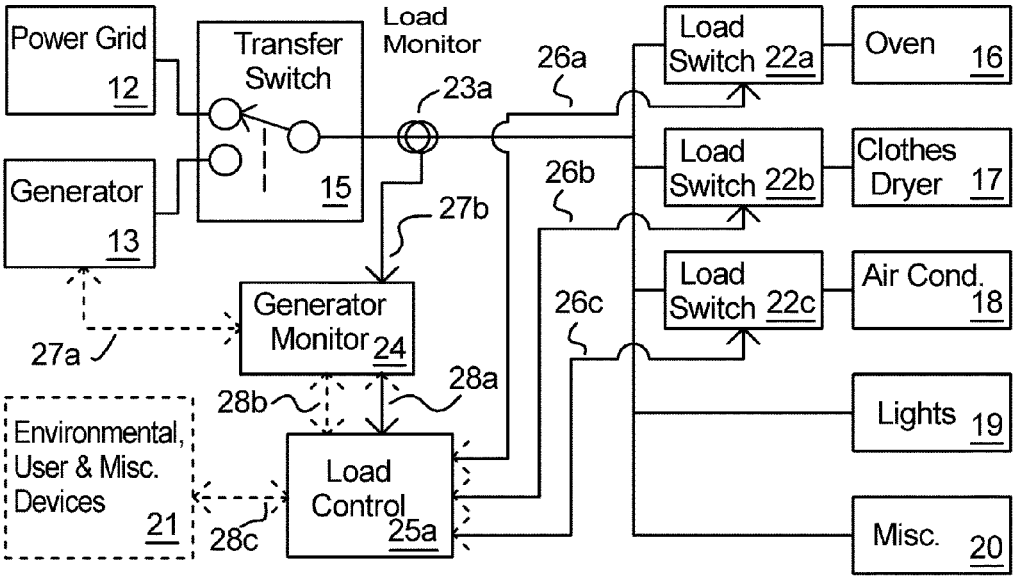

GENERAC 1037
Generac v. PSLC
IPR2026-00024

(56) **References Cited**

U.S. PATENT DOCUMENTS

7,402,766	B1	7/2008	Jonas et al.	
7,692,332	B2	4/2010	Nordman et al.	
7,948,117	B2 *	5/2011	Lathrop	H02J 3/14 307/64
8,159,084	B2	4/2012	Gilpatrick	
8,222,548	B2	7/2012	Espeut, Jr.	
8,248,058	B2	8/2012	Stair et al.	
8,324,755	B2	12/2012	Stair et al.	
8,350,405	B2	1/2013	Vicari et al.	
8,736,103	B2	5/2014	Vicari et al.	
9,088,180	B2	7/2015	Wedel et al.	
9,876,343	B2 *	1/2018	Lathrop	H02H 3/08
2002/0024332	A1 *	2/2002	Gardner	H02J 3/14 324/103 R
2002/0072868	A1	6/2002	Bartone et al.	
2003/0036822	A1	2/2003	Davis et al.	
2004/0007876	A1	1/2004	Braun et al.	
2004/0075343	A1	4/2004	Wareham et al.	
2004/0078153	A1	4/2004	Bartone et al.	
2004/0117330	A1	6/2004	Ehlers et al.	
2004/0267385	A1	12/2004	Lingemann	
2005/0109387	A1	5/2005	Marshall	
2005/0116814	A1 *	6/2005	Rodgers	H02J 3/14 340/538
2005/0216131	A1	9/2005	Sodemann et al.	
2006/0018069	A1	1/2006	Gull et al.	
2006/0072262	A1 *	4/2006	Paik	H02J 3/14 361/62
2006/0087784	A1 *	4/2006	Ba-Thunya	H02H 3/08 361/93.1
2006/0276938	A1 *	12/2006	Miller	G06Q 50/06 700/295
2007/0008076	A1	1/2007	Rodgers et al.	
2007/0010916	A1	1/2007	Rodgers et al.	
2007/0053123	A1	3/2007	Filippenko	
2007/0222294	A1	9/2007	Tsukida et al.	
2007/0222295	A1	9/2007	Wareham et al.	
2007/0276547	A1	11/2007	Miller	
2008/0093851	A1	4/2008	Maeda et al.	
2009/0216386	A1	8/2009	Wedel	
2010/0019574	A1 *	1/2010	Baldassarre	H02J 3/14 307/23
2010/0134073	A1 *	6/2010	Kohn	H02J 7/0091 320/152
2010/0225167	A1 *	9/2010	Stair	H02J 3/14 307/29
2010/0328850	A1	12/2010	Remmert	
2011/0064445	A1 *	3/2011	Yashiro	G03G 15/5004 399/88
2011/0175450	A1	7/2011	Vicari et al.	
2011/0254370	A1	10/2011	Wischstadt et al.	
2011/0298286	A1	12/2011	Batzler et al.	
2012/0056436	A1	3/2012	Russell et al.	
2012/0056474	A1 *	3/2012	Larson	B60R 16/03 307/9.1
2012/0242145	A1	9/2012	Espeut, Jr.	
2013/0116487	A1	5/2013	Clark et al.	
2013/0158726	A1	6/2013	Mauk	
2013/0159738	A1	6/2013	Mauk et al.	
2013/0270908	A1	10/2013	Wedel et al.	

OTHER PUBLICATIONS

Generac, Load Control Module brochure, printed Apr. 7, 2010.
Tesla Motors, High Power Connector Installation Manual, (date unknown).
Simon Cohen, Which apps would you like to see on the iPad?, Feb. 10, 2010.
Lasko, 30" Tall Digital Ceramic Pedestal Heater with Remote, Model 5350, Mar. 2006.
Generac, Nexus LTS connections, (date unknown).
Generac, Technical Manual Nexus Smart Switch, Mar. 22, 2010.
Generac, Technical Manual Nexus LTS Load Shed Switch, Aug. 16, 2010.
Cummins, Automatic transfer switches, copyright 2007.
Cummins, GGHE Generator set data sheet, copyright 2009.
Cummins, GGMA Generator set data sheet, copyright 2009.
Cummins, PowerCommand 3100 Digital generator set control, copyright 2008.
Generac RTSS Load Shed Automatic Transfer Switch, part No. OG8637, rev. C May 20, 2008, (esp. section 1.2.3, p. 3).

* cited by examiner

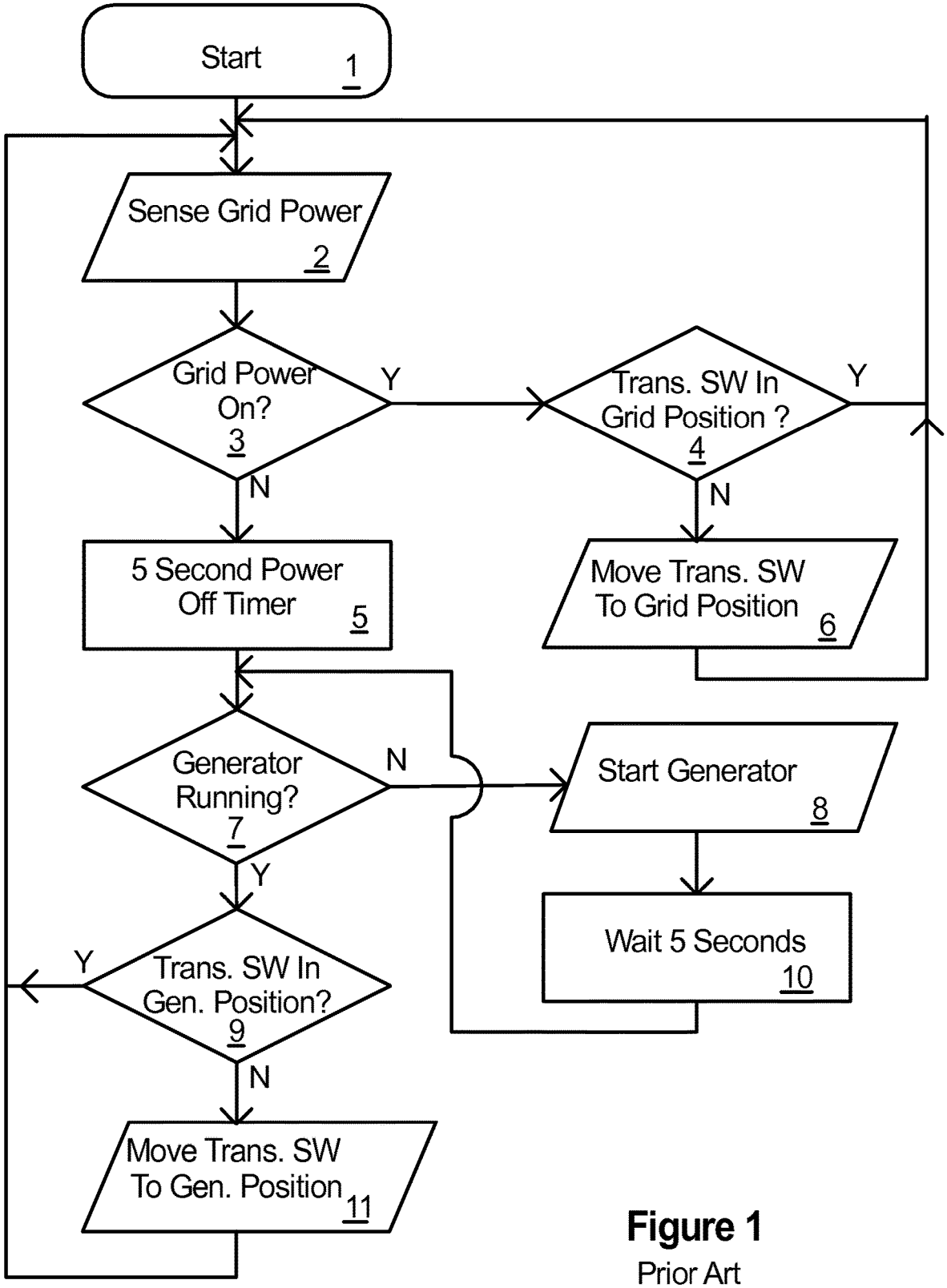

Figure 1
Prior Art

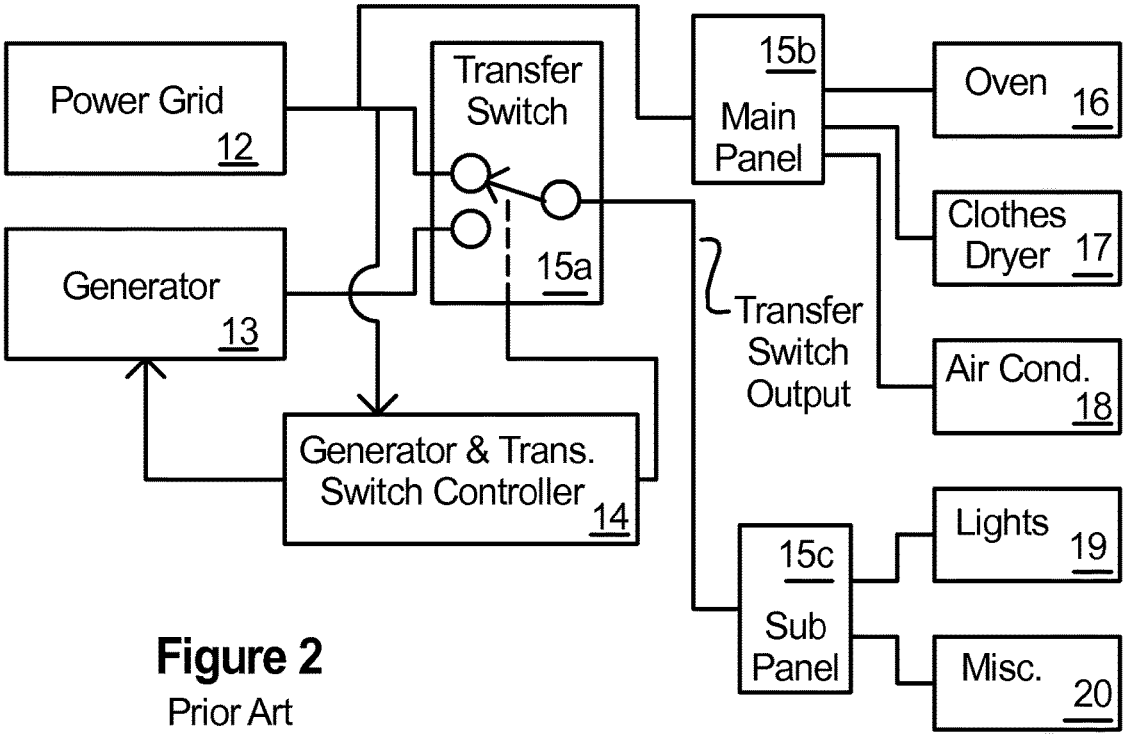

Figure 2
Prior Art

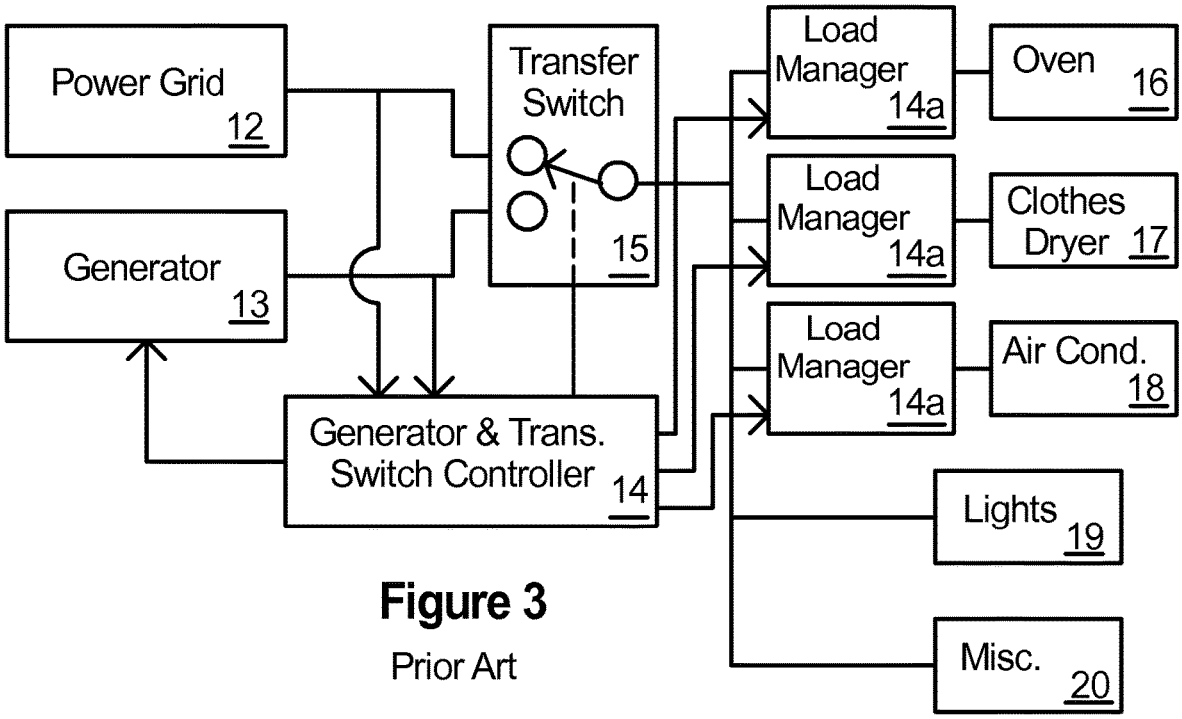

Figure 3
Prior Art

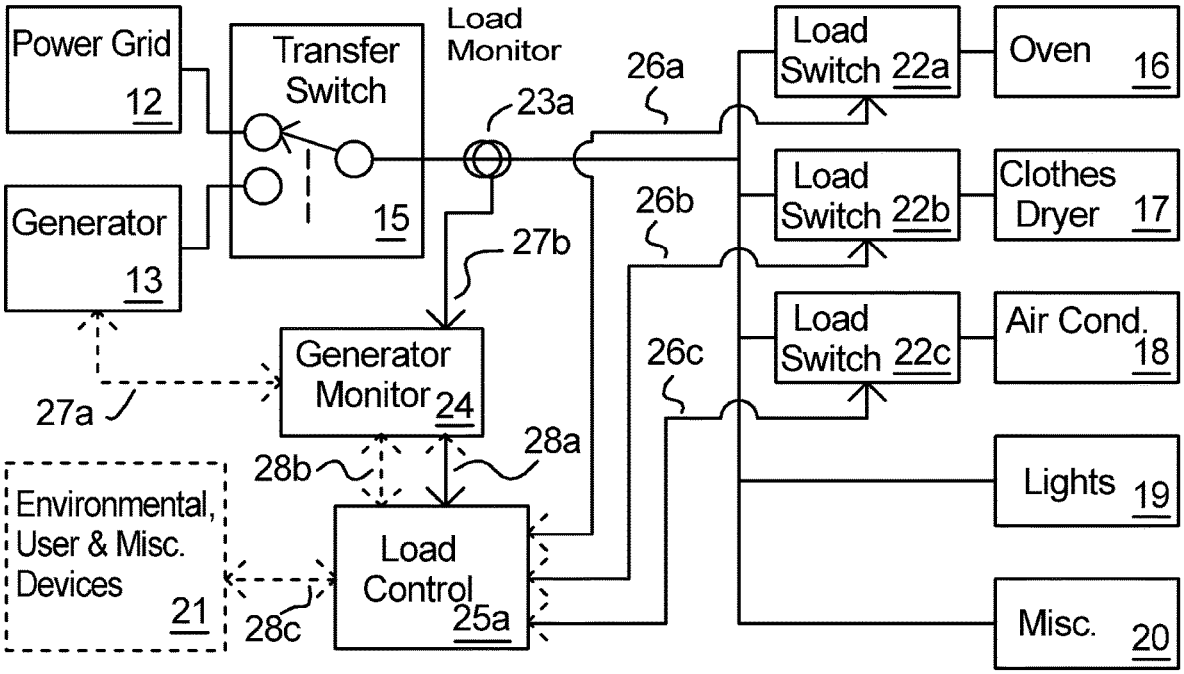

Figure 4

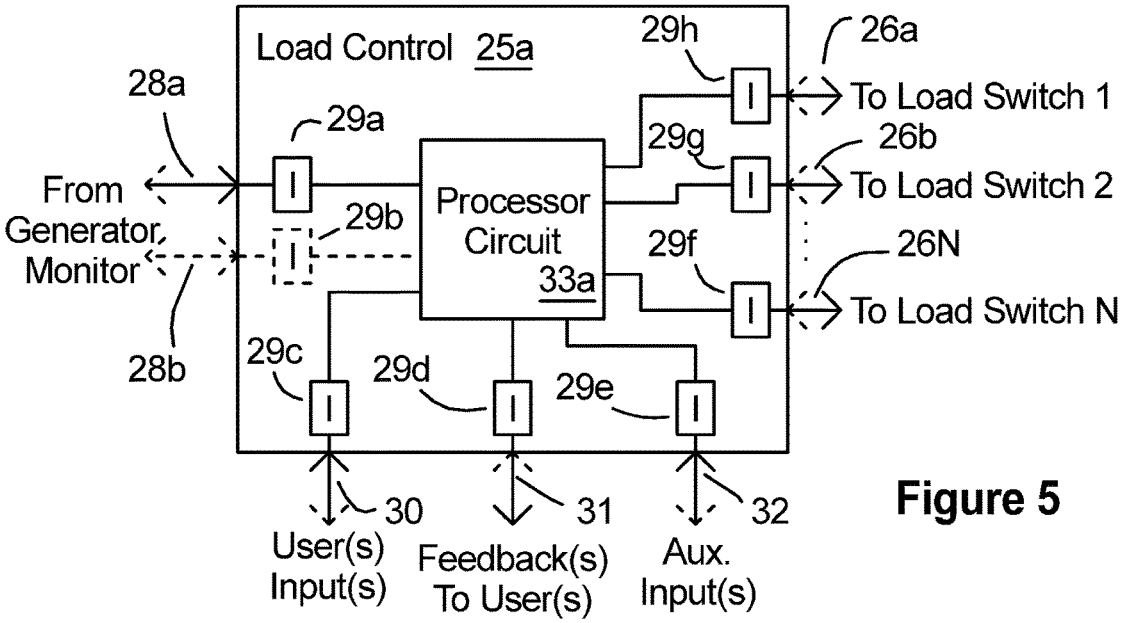

Figure 5

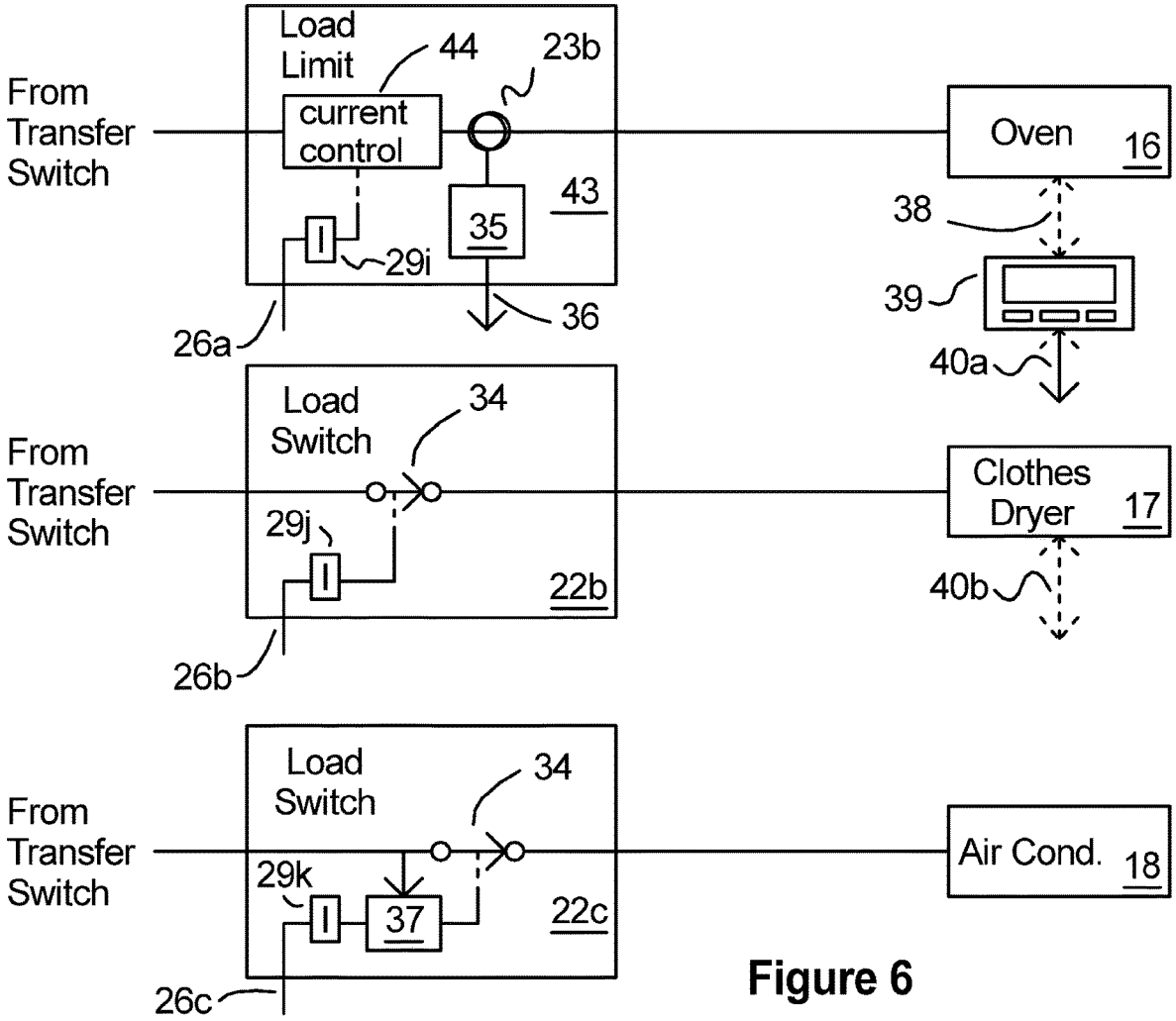

Figure 6

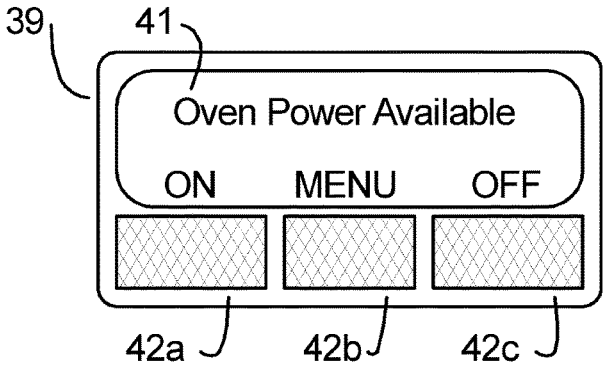

Figure 7

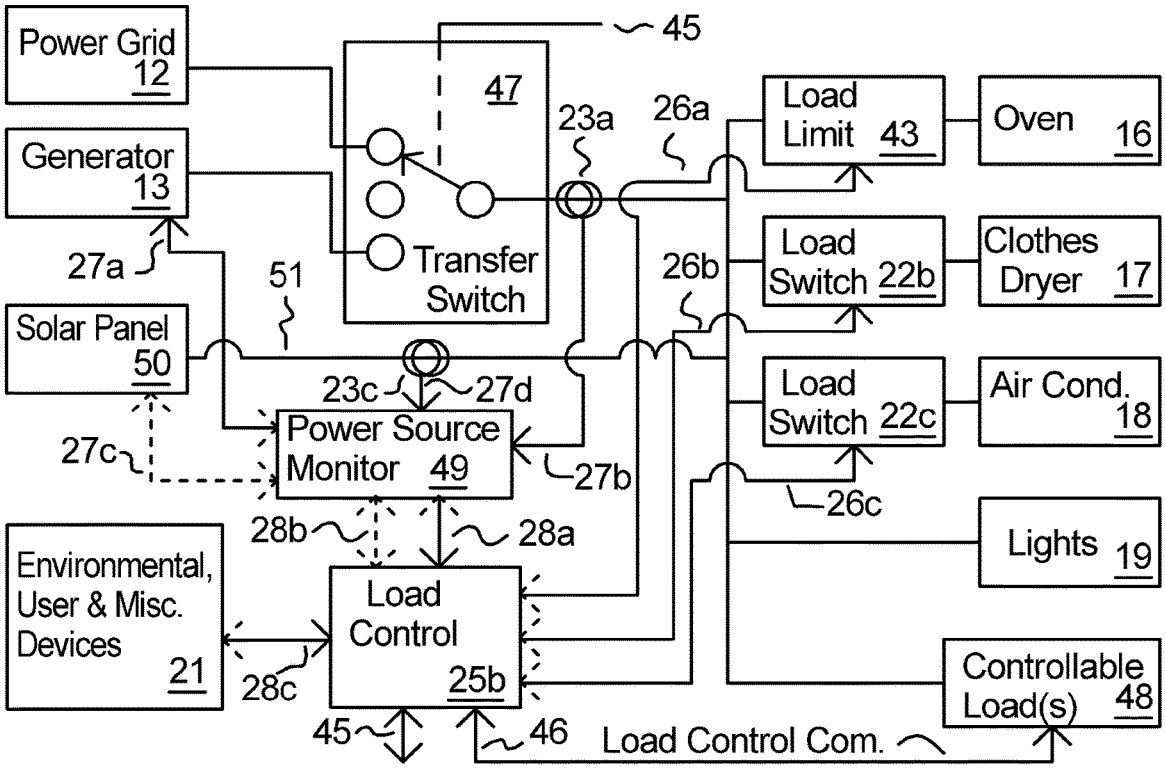

Figure 8

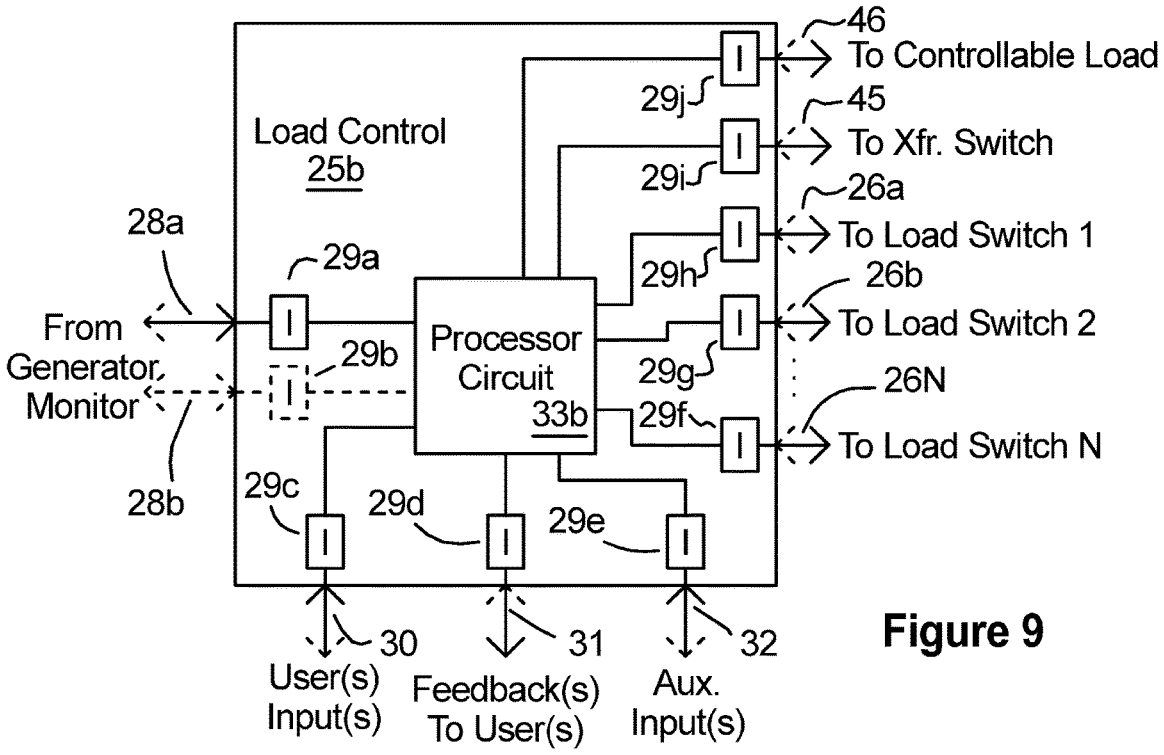

Figure 9

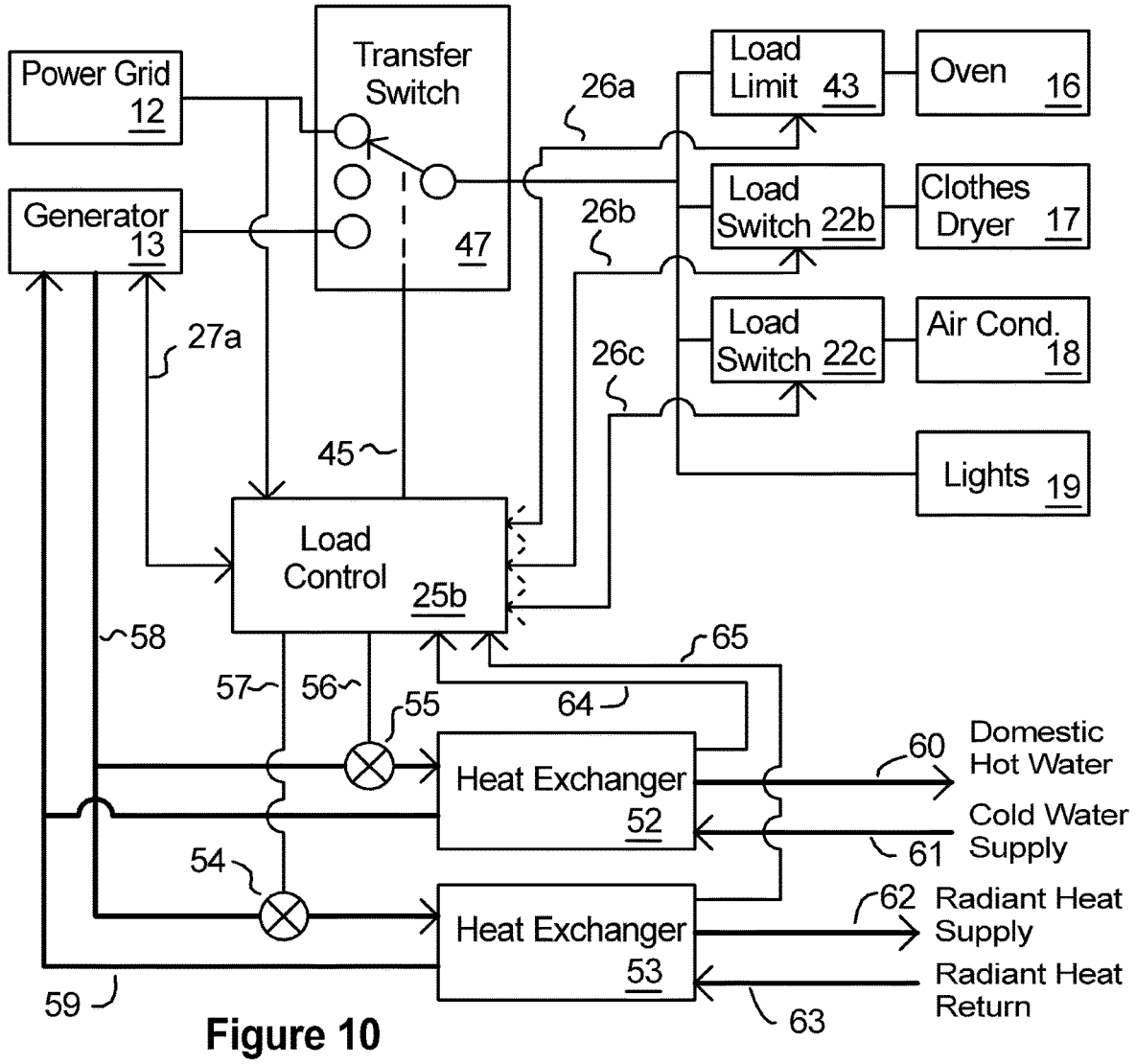

Figure 10

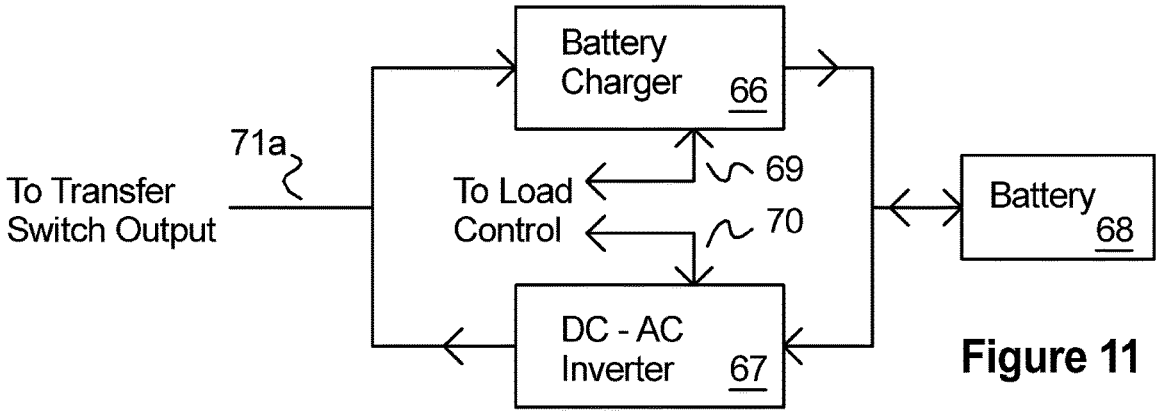

Figure 11

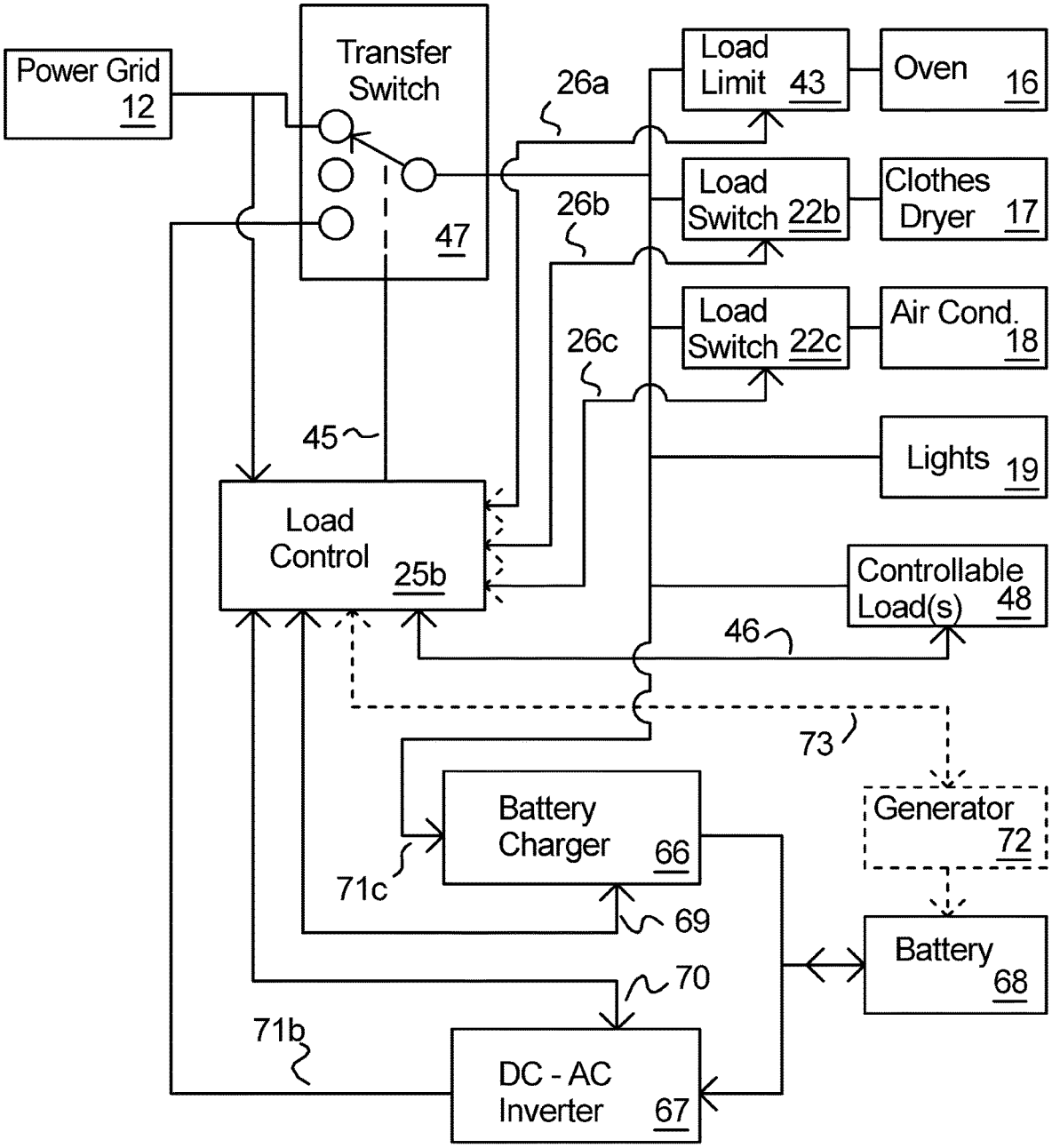

Figure 12

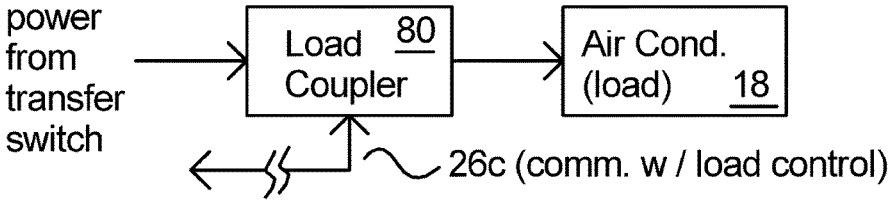

Figure 13

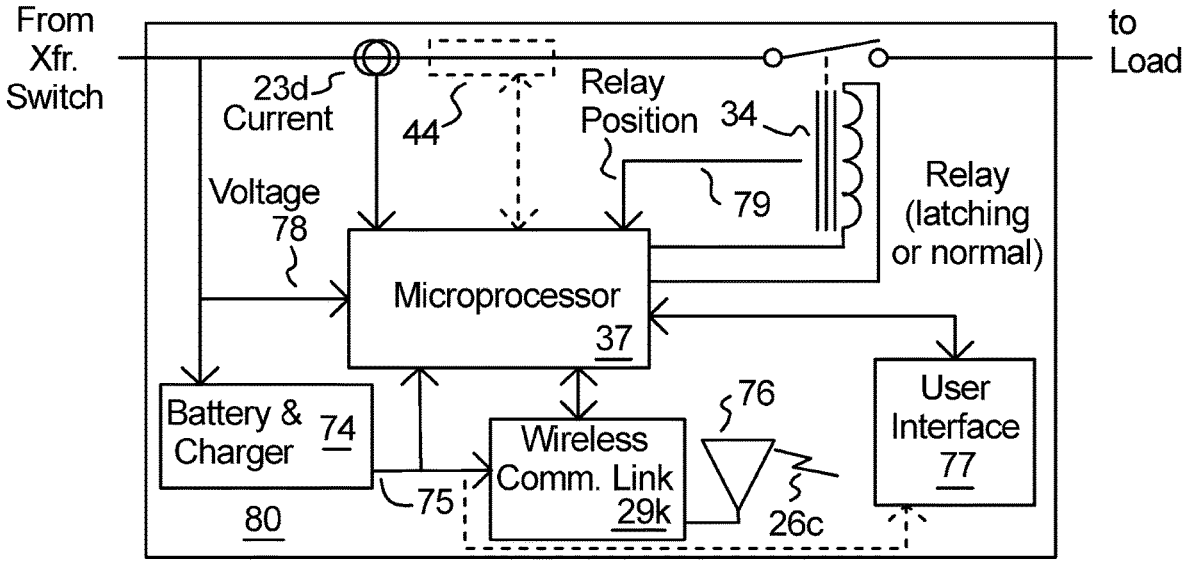

Figure 14

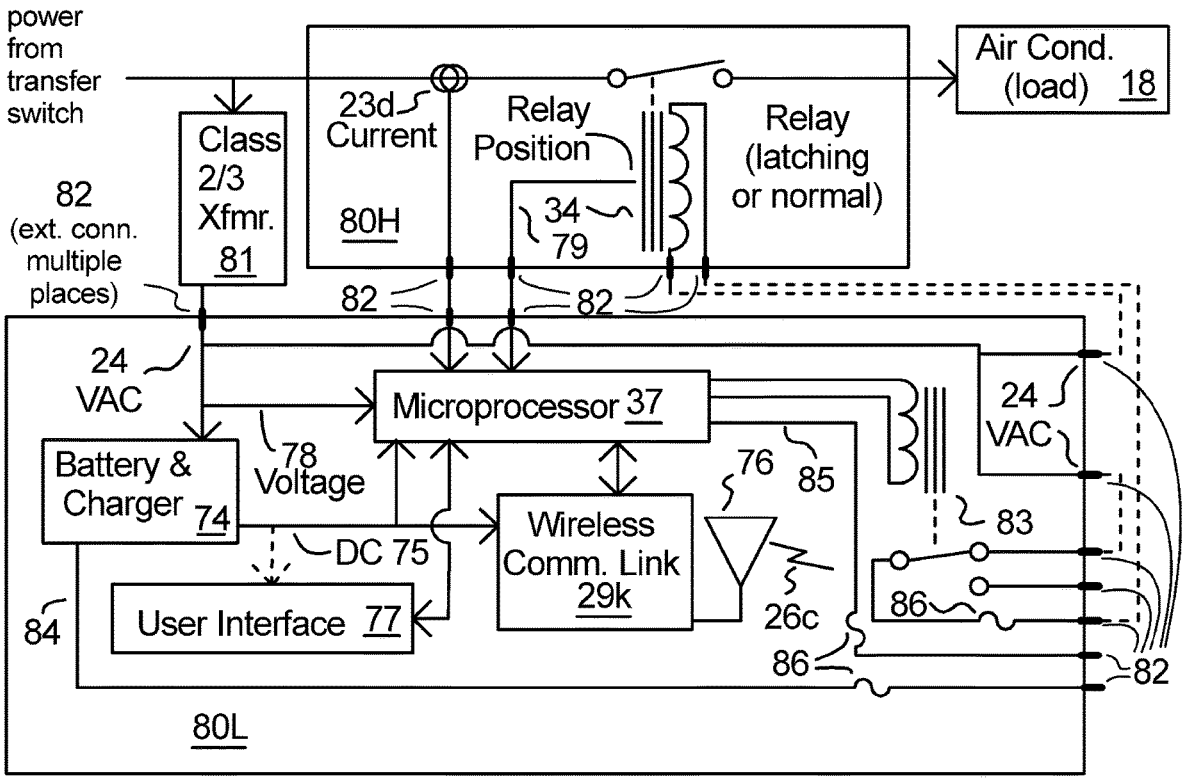

Figure 15

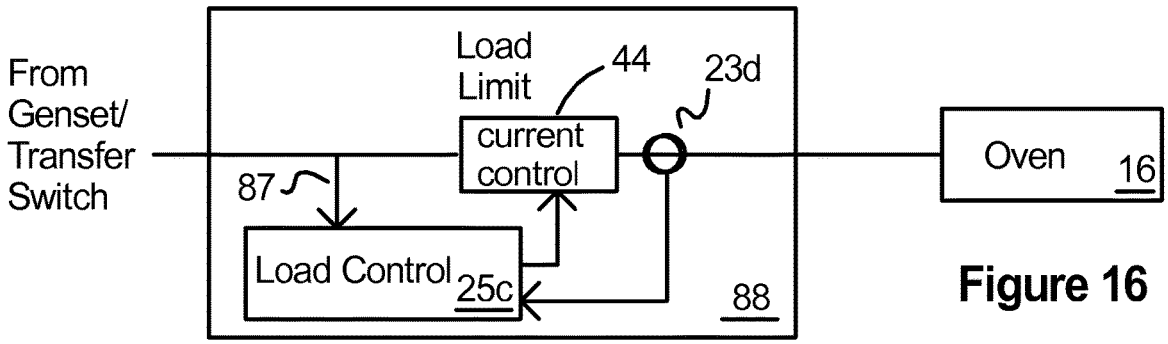

Figure 16

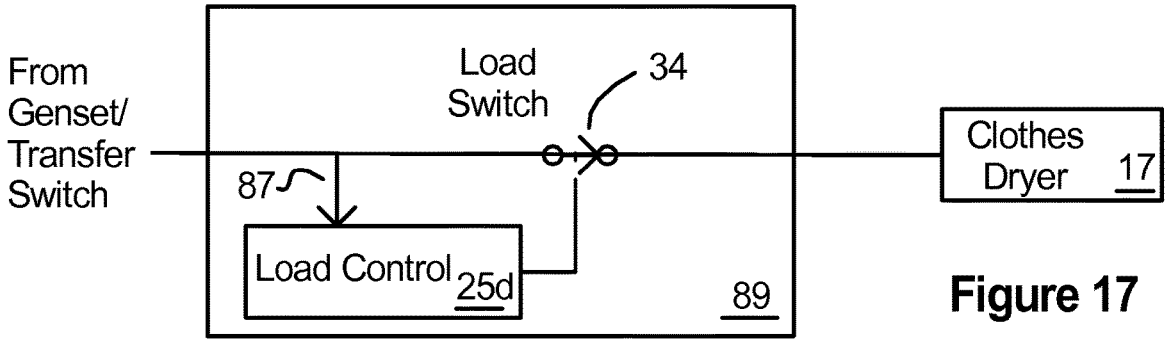

Figure 17

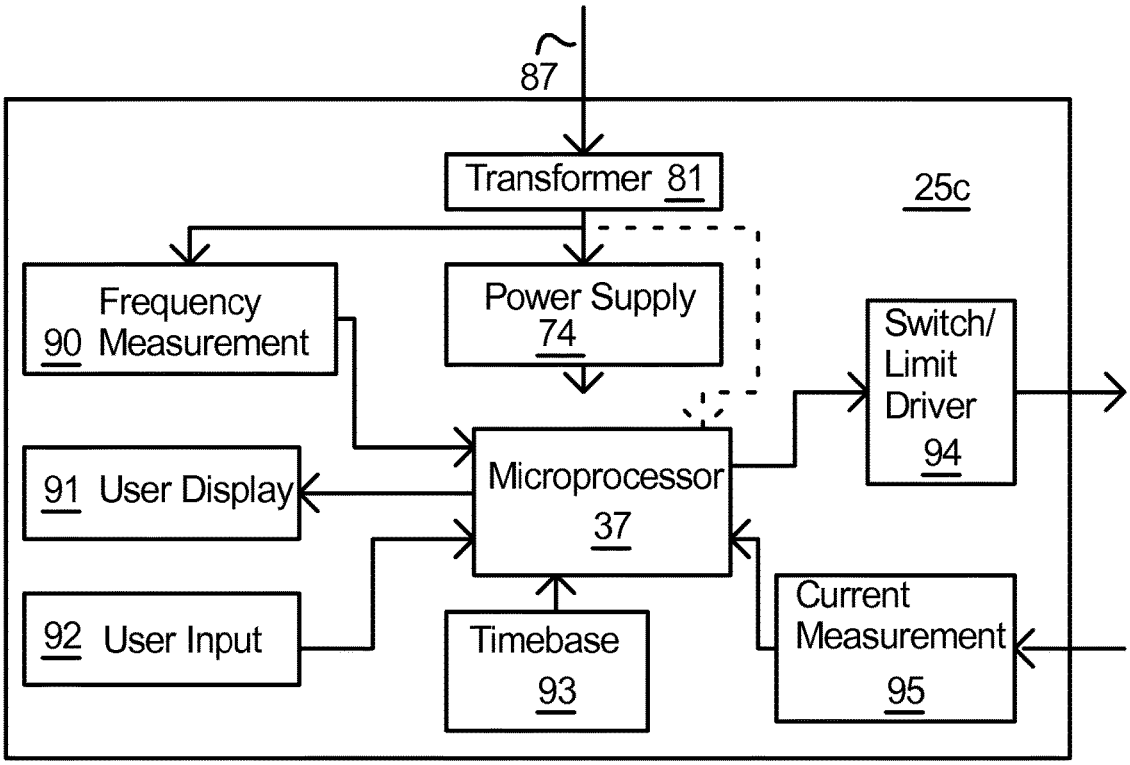

Figure 18

POWER SOURCE LOAD CONTROL

This application claims benefit of, and incorporates by reference herein in their entirety, provisional patent applications filed by the present inventor: Power Source Load Control, application No. 61/490,253 filed May 26, 2011; Power Source Load Control, application No. 61/552,722 filed Oct. 28, 2011; Load Control, application No. 61/598,564 filed Feb. 14, 2012 and Genset Overload Control, application No. 61/624,360 filed Apr. 15, 2012.

BACKGROUND OF THE INVENTION

The background of the invention, summary of the invention, brief description of the figures, detailed description of the preferred embodiment, claims and abstract are presented and described herein to a person having ordinary skill in the art to which the subject matter pertains, hereinafter sometimes referred to as person of ordinary skill or one of ordinary skill. Many people of ordinary or advanced skill in the art commonly use words, for example such as generator and load, to have language, location and context specific meaning. This usage works well for providing understanding and clarity to a person of ordinary skill, despite using words having several potential meanings. For example, valve is used in Europe in relation to vacuum tubes and in North America in relation to gaseous and fluid controls. Gas is used in the U.S. to mean gasoline and the gaseous state of a substance. One of ordinary skill will know from the language, location and context used which meaning of more than one possible meaning is intended.

As one example to demonstrate how the intended meaning is the known meaning to one of ordinary skill, consider a power generating device which is often referred to simply as a generator by one of ordinary skill, relying on the field of art and context of usage to supply specific meaning and limitations to the particular name generator. A person of ordinary skill writing a technical article about a backup generator used in the art of heating (or otherwise powering) a suburban home during loss of public utility power would know and intend generator to mean an electrical generator. A person of ordinary skill writing a technical article about a backup generator used in the art of heating a building in a large city during loss of public utility power would know that generator could be a steam generator. According to this example, depending on context, one of ordinary skill would know generator to mean a steam generator or an electrical generator. As another example, in the electrical power generating art generator is commonly meant to mean the generating device such as a motor or turbine and electrical alternator combination. As yet another example in the electrical art an electrical generator (often used in pre 1960's vehicles) outputs D.C. power and is distinguished from an alternator (often used in post 1960's vehicles) which creates A.C. power which is internally rectified to provide the needed D.C. power. Load may refer to the total load on a generator, or an individual load presented by a particular device, or may refer to the device itself which presents a load. The person of skill will recognize the meaning of generator and load from the context in which it is used.

As set forth in more detail in MPEP 2111.01 (July 2010 revision is referred to herein), Applicant, as his own lexicographer, intends the words and phrases used in the specification and claims to have their plain U.S. English meaning, unless it is clear from the specification that they have been given a different meaning. When a word or phrase for example such as a technical word or phrase has a meaning

to one of ordinary skill from the location, context, usage, time frame and/or what is well known in the art to differ from the plain U.S. English meaning as of the pertinent date, Applicant intends that meaning which is known to one of ordinary skill to be used. As set out in MPEP 2182 a patent specification need not teach, and preferably omits, what is well known in the art. Thus Applicant further notes that a meaning of a word or phrase which is well known in the art may not be specifically set forth in the instant specification other than by this note.

In a facility where a power source provides power to one or more devices which each present a load or loads to the power source there is a need to determine and control which and how many loads are connected in order that the total of the loads does not create an overload. Overloads are generally undesirable in that they may cause deviation from power output specifications, loss of power, damage or combinations thereof. In the above power source (generator) examples an overload could cause steam to not be hot enough, or electric voltage to be too low or have the wrong frequency. Additionally, management of the creation of power by the power source, as well as the loads connected thereto is desirable for efficient operation.

A given power source has a maximum load handling capability dictated by the power generation and delivery path (e.g. pressure, voltage, pipe size, wire size) or a maximum output (e.g. dictated by the design of the power source and the system it is used in). For simplicity, devices that may be connected to the power source are often referred to in the art and herein as loads. For a given group of loads that are available for connection, it may be desirable to inhibit a particular individual load from being connected to the power source at a given time (e.g. preventing connection or disconnecting an already connected load) or during a given time period or to restrict the power supplied to the load (e.g. by controlling coupling), or the power consumed by the load (e.g. by controlling the load). It may also be desirable to allow a given load to be connected at a given time or during a given time period. For example it may be desirable to inhibit the connection of a large load during times of high load demands, or to allow that load to be connected and operated only during night hours when there is ample power available and/or when fuel or energy rates are cheaper.

One of ordinary skill will recognize from the teachings herein that the inventive concepts given by way of example may be utilized for many types of power systems, including but not limited to hydraulic, fluid or gaseous heating, mechanical, thermal, solar, wind, liquid fuel, gas fuel, solid fuel and combinations thereof. The use of the invention with various types of systems will be known to the person of skill and in particular by use of well known correlations between electrical, fluid, chemical and mechanical systems. For example a voltage in an electrical system correlates to pressure in a fluid system, amperage to flow rate, wire size to pipe size, switch to valve, etc. While the present invention will be known from the teachings herein to have applicability to many forms of power sources and loads the background and teachings will be given by way of example with respect to electrical generators and loads. The electrical generators used by example often include a rotating power source and AC alternator combinations and are often referred to in the art as generator sets, gensets or simply generators as well as by a host of other names which are frequently specific to the particular type of energy source, power output and/or alternator used.

The connection and disconnection of power from the power source to the load is in general controlled by one or

more switch and it will be understood that there are many types of switching mechanisms that may perform such connection and disconnection. When speaking of switch, switching, connection or disconnection it will be understood that such action is not meant to be restricted to a particular type of switch or connection unless the type is specifically enumerated or is apparent from the context. For example when teaching connecting, coupling or switching power from an electrical generator to an electrical load it will be understood that the action is performed by an electrical circuit, for example a switch but the teaching is not otherwise limited to a particular type of electrical switch unless specifically enumerated. If the teaching is with respect to controlling the amount of current or load (as compared to simply switching the current or load on or off) it will be known that a simple on/off type of switch is not meant and the switch must be some sort which can control the amount of current.

Often there are multiple types of electrical devices available to be connected to and powered by the power source. Some devices may simply be turned on and off and some devices have loads which will vary with time or environment. A maximum load can occur when all devices are powered at the same time and each device presents its individual maximum load to the power source. As a simple example, it is possible to turn on all of the lights and appliances in a house, but that rarely happens. In many systems maximum loads are rarely presented to the power source and the typical load is frequently much less than the maximum load. That causes a system design problem because it is necessary for the power source, in the present example an electric generator, to provide power to the maximum load to prevent overload but that capability generally makes powering the typical load inefficient.

By way of background one of ordinary skill will recognize that several factors are involved in both the amount of power that can be supplied by a power generator and the amount of power consumed by a particular device which is being powered. The output of a wind turbine is dependent on the amount of wind and the design of the turbine. A solar cell array is dependent on the amount of sunlight and the design of the array. An electrical generator is dependent on the mechanical power available to turn the alternator. For a typical liquid or gaseous fuel powered backup generator, the maximum output is dependent on the size of the internal combustion engine, the alternator and its operating conditions.

With respect to internal combustion engine powered electrical generators the maximum power available and transferred to a load for a given size generator is generally dependent on many factors such as the generator's internal temperature, ambient temperature, humidity, altitude and barometric pressure, type of electrical connection (e.g. voltage and single or multiple phase), power factor of the load, fuel quality, fuel delivery rate and duration of the load. Generally the internal temperature of the engine is a factor in determining the safe maximum output of the engine and the internal temperature of the alternator is a factor in determining the safe maximum current output from the alternator. Internal temperatures of the engine and alternator are dependent on load, ambient temperature, altitude, barometric pressure and humidity, among other factors. Engine efficiency is also dependent on various fuel and air quality factors. A generator can usually withstand higher currents when it is cool but those currents will soon (often in the matter of a few minutes) cause additional internal heating which in turn limits the maximum output current. Electrical generators often have two maximum power ratings, one for generator use as a backup power source and one for use as a prime power source. The prime power maximum is usually lower in part due to the continuous operation.

Efficient operation of such generators is usually a consideration in the selection of the generator which in turn leads to a need for the present invention to manage the load presented to the generator. As an example, consider the specifications of a Cummins model GGHE 60 kW electric power generator which includes an AC alternator which is driven by a 6.8 liter V10 internal combustion engine using natural gas as fuel. Electric power generators of this type are commonly used for backup power in large homes and small businesses to provide power in the event utility company power fails. Assume for this example that this generator is chosen to power a home which can present a maximum load of 60 kW to the generator, but a typical load is only 15 kW.

At the full load output of 60 kW the natural gas fuel consumption for this generator is 24.4 cubic meters per hour (m^3/hour). One might think that at ¼ load this generator would burn fuel at approximately ¼ of the full load rate or 6.1 m^3/hour. That assumption is incorrect however because the generator is much less efficient at ¼ load. The fuel burn rate for a 15 kW load is actually 10.6 m^3/hour or about 43% of the full load rate. Among the several reasons for the inefficiency at lower loads is that the alternator and the big V10 engine's entire cooling system must be sized to handle heat output at full load. The coolant pump is pumping coolant through the engine and radiator, the fans are pulling cooling air through the alternator, across the engine and blowing air through the radiator thus performing maximum alternator and engine cooling whenever the engine is running. This cooling causes a considerable drain of engine power, even though all of that cooling is not needed for the 15 kW load. Other efficiency robbing factors such as engine friction and alternator windage are higher than needed for the typical load because of the design to handle maximum load.

If instead a less expensive Cummins model GGMA four cylinder generator rated at 20 kW were used as the power source, the natural gas burn rate when powering the typical 15 kW load is only 7.6 m^3/hour. Using the smaller 20 kW generator is less expensive to purchase and operate and thus more efficient for the typical load. Unfortunately the 20 kW generator is unable to handle the 60 kW maximum load, which if connected to the generator would cause the generator circuit breaker to trip and all power to the load would be lost. As will be described herein the present invention will find use in such applications where a generator is unable to power the maximum load which can otherwise be presented to it.

With respect to the power required by a particular load several factors may be involved depending on the load type. Several examples of varying load will be briefly described to aid in understanding the invention. It will be understood that for most devices the voltage applied from the generator is substantially constant and consequently the current drawn by the device is proportional to the load on the generator. When the voltage from the generator is substantially constant the current supplied directly corresponds to the power supplied and vice versa and either may be measured to obtain the other as is well known to one of ordinary skill. Many electric motors have a large starting current for a few seconds followed by a running current which depends on the mechanical work the motor is doing. For a motor such as one powering a vacuum cleaner that work depends on the amount of suction being created at any particular time which

in turn depends on the technique of the person operating the vacuum. Heating appliances such as ovens often require more current to initially heat up than to maintain temperature once it is heated. This change is due in part to temperature dependent resistance changes of the heating elements.

An air conditioner will require a large starting current for a few or many seconds depending on the head pressure of the compressor pump and mass of the armature of the compressor motor and the moving components of the compressor pump. Once the compressor is up to operating speed the amount of current necessary to maintain that speed depends on the head pressure which in turn is partially dependent on the temperature of the condenser coil which in turn is dependent on ambient temperature and air density. If a compressor loses power the built up head pressure will take several dozen seconds or even minutes to bleed off through the capillary tube or expansion valve in the evaporator and if an attempt is made to restart the compressor before that head pressure has dissipated the starting current will be very large. If the head pressure is too high it can cause the compressor motor to stall which in turn will cause one or more circuit breakers to trip and remove the voltage supply from the compressor, thus care must be taken to not start the compressor too quickly after it has stopped. This can be an issue when utility power is lost and a backup generator is started to replace that lost power.

A battery charger used for example to charge the batteries in an electric or hybrid vehicle or the like, can change its load to the power source based on a variety of factors including the internal temperature of the batteries and their amount of charge. Generally the charging current is decreased with increased temperature and as the batteries approach full charge. The control of battery charging current, especially in large battery arrays used with electric and hybrid vehicles and the like is well known in the art. For example U.S. Patent Application Publication 2010/0134073 assigned to Tesla Motors, Inc. describes an elaborate manner in which battery charging current, temperature and various other factors are controlled, which Publication is incorporated herein by reference in respect to its prior art teachings. It may be noted that by controlling charging current, the maximum load drawn from the power grid or generator can be controlled.

Tesla Motors, Inc. offers a high power connector which allows its vehicle to be connected to common 240 volt AC power circuits to charge the batteries. The Tesla Motors High Power Connector, or HPC includes a maximum current selector switch that is manually set at the time of installation such that the maximum amount of current which the charger is allowed to draw from the 240 volt circuit is limited according to the capability of the circuit connection to the supply. For example if a 40 amp circuit is used, the switch on the HPC is set to limit the HPC current draw to 32 amps. This is an important feature of the HPC because even though the charger is capable of operating with a 240 volt, 90 amp circuit for fast battery charging, many homes only have a 100 amp service connection and thus are incapable of providing current to the HPC via a 90 amp circuit without risk of overloading the service and tripping the main circuit breaker.

Returning now to the operation of a system having a variety of loads, in order to prevent sustained overloads and decrease the possibility of a circuit breaker trip or damage to a generator, especially those used for backup power, there are prior art systems which detect when a generator is in an overload condition and switch off loads. This operation is known as load shedding. Load shedding is well known in the prior art, for example a system is described in the Rodgers et al. U.S. Patent Application Publication 2005/0116814 which Publication is incorporated herein by reference in respect to its prior art teachings. Paragraphs 70-115 are particularly pertinent. Importantly load shedding takes place when the load is connected and overload detected as described in more detail in this Publication.

Load managers for load shedding are commercially available, for example the Generac Nexus automatic transfer switch used in conjunction with backup power generators has a load manager option. These devices, which will be explained further below in respect to FIGS. **1-3**, operate to start a gaseous or liquid fueled backup generator to power homes and businesses whenever power from the local power company fails and transfer the load from the local power company to the generator. This Generac transfer switch contains multiple switches, a main high current switch (e.g. 400 amps) for switching between the power grid and generator as the source of power for the home or business. It includes additional low current secondary switches to provide control voltages which are used to disconnect low priority loads via load managers such as the Generac DLC load control Module (contactors) when the generator is overloaded.

Most generator engines utilized for North American home backup systems rotate at 1800 or 3600 RPM, that rotation being coupled to an alternator that provides AC power at a standard 60 Hz frequency. When overloaded the rotation of the engine slows because the engine can not produce enough torque to keep the alternator rotating at the correct speed. The slow engine in turn causes the frequency of the AC power to decrease. The rotation and corresponding AC power frequency may drop substantially in the presence of a large overload and the engine and alternator can even attempt to rotate against their mounts, much like an automobile engine attempts to rotate against its motor mounts during heavy acceleration. The Nexus transfer switch includes technology which monitors the frequency of the AC power from the generator and sheds all of the low priority loads after the generator has been overloaded. Nonessential circuits (low priority loads) are shed by opening the secondary switches when the frequency of the AC power provided by the generator drops below 58 Hz (for 60 Hz systems). The secondary switch is used to control a circuit to apply or remove voltage to a contactor to control applying and removing a corresponding load on the generator thereby removing the overload when the contactor is opened. Importantly this load shedding takes place after the overload happens.

Frequency detectors have tolerances which must be accounted for to avoid false tripping so there is a tradeoff in the speed of detection of off frequency condition vs. false detection due to frequency detector error or allowable momentary frequency deviation. For example if the frequency threshold for disconnecting the load is set at 58 Hz, inaccuracies in frequency detection may cause an overload to be falsely detected and a load disconnected when no overload exists. It is possible that a combination of overload, say one which slows the frequency to 58 Hz and inaccurate frequency detection, can cause an actual overload to go undetected. Unfortunately the overload, and possibly damage to the generator or its load, may have already happened by the time the overload is detected. Despite the various shortcomings in using power frequency as an indicator of generator overload, it will be understood from the present teachings that this is nevertheless an inexpensive manner of

detecting and removing overloads, as will be taught further in connection with load limit and load switch operations.

As another example if an oven is turned on at the same time a storm drain pump automatically starts, it is still possible that the generator circuit breaker will trip before the overload can be detected and the excess load removed, thus all power will still be lost. Turning on an oven at night during a storm and having all power go off because the generator circuit breaker improperly tripped can be extremely troublesome, not to mention the inconvenience of having to find and reset that circuit breaker. At the least, it is inconvenient for someone in the home to turn on a device, only to have it or some other device(s) automatically disconnected from power shortly thereafter. In a home backup system that device causing the overload might be something that is needed in a timely fashion such as a medical device, lighting, a cooking appliance, a television, garage door opener or other important device. In most situations it would be better to have a nonessential load such as a vehicle battery charger turned off or limited to prevent any overload.

SUMMARY OF THE INVENTION

It will be understood from the present teachings that it is desirable to control the total load presented to a particular power source to keep that load at or somewhat below the maximum capability of the power source. Alternatively it may be desirable to control the total load to keep the power source at or near its optimum power output to achieve high or maximum efficiency. As part of controlling the load to the power source it is desirable to connect some or all loads according to a priority. It is also preferred to alert the user that power is not available to power a particular device and allow the user to decide what to turn off or leave off than to have the device (and possibly several others) turned off shortly after it is turned on due to actual or potential overload. If loads are available that may but do not need to be connected and operated, it may be desirable to wait and operate them when the power source is operating well below its optimum efficiency. By waiting an increase in the efficiency of the operation is achieved with the added benefit of avoiding having to disconnect loads when the power source is operating at or somewhat below its maximum capability and an unexpected additional load is applied. Thus at least these two modes of operation are desired to be provided to facilitate reliability and efficiency, operation at or somewhat below maximum output capability and operation at, near or closer to optimum power source output.

It will be understood by one of ordinary skill that short term large loads may be allowed in that many engine driven alternator systems are designed to permit short term increases in power output above the maximum power that can be continuously delivered. As used herein and in the claims, overload means a load that if not disconnected or otherwise prevented will either cause a departure from specifications for the power output from the power source, for example such as a deviation of AC power voltage or frequency for longer than a specified time period, a loss of power such as from a tripped circuit breaker, or damage such as overheating or exceeding mechanical stress limits.

When making decisions which are aimed at efficiency, one substantial consideration is the cost of providing power. If power can be obtained from the electric utility or elsewhere at lower cost during certain times, for example during the night, the invention can be utilized to control loads in a manner to best take advantage of the lower cost power. This can be done while still ensuring that the devices presenting the loads are available for use at other times if needed. Such use can include the device's intended function or use by a user, or as a load to improve power source efficiency. For example a battery charger for charging an electric or hybrid vehicle or the like can charge the battery to a given level such as half full, immediately upon being connected. This will ensure the vehicle is quickly available for use. The remainder of the charging from half to full charge can be delayed until lower price electricity is available. The delay of the remaining charge can also be used to boost an under utilized power source such as a backup generator closer to its optimum output for improved efficiency. Thus it is desired to control a charger to charge at a given rate as soon as connected until a first level of charge is reached and then charge at the same or another rate starting at a later time and continuing until a second level of charge is reached.

The delay of operating a load can be coordinated with maintenance of the power source to provide a load for the maintenance without wasting power. Most backup generators are controlled in order that they are operated periodically, with or without a load, for example 30 minutes every week. This is known as exercising and it helps to keep fluids circulating, bearings oiled, moisture dried, etc. to improve reliability. A load such as a battery charger can be delayed until an upcoming scheduled exercising when the battery is charged. Alternatively the battery can be charged at a convenient time by rescheduling the exercising. More generally loads may be supplied with current at a first known amount (which may be an amount to achieve a particular effect such as charge rate) starting at a known time (which may be upon connection or a clock time) for a known period of time (which may be the time to achieve a particular event or a particular clock duration) followed by one or more known combinations of the above known amount, known time and known period. As one example, charging a battery at full rate until half full upon connection upon return to home in the evening then charging at the maximum available current during the time period of generator exercise followed by charging at a most efficient charging rate during off peak hours when grid power is cheap with each of the times being terminated early if the battery reaches full or some other desired charge level.

The invention can also be configured to allow selection of the power source to power one or more loads from among a plurality of power sources, for example a load can be powered from a low cost source such as photovoltaic solar cell panels, a wind turbine, fuel cell, flywheel or powered from the utility company power if there is insufficient sun and wind or if more power is needed than the solar panel, wind turbine and/or fuel cell can provide. This operation may be coupled with efficient utilization of sources such as to charge a vehicle battery as described above. Changing to other power sources can be accomplished by any means or method known to the person of ordinary skill, e.g. via transfer switch, parallel input connections to the load, parallel power sources.

The invention described herein allows efficient matching of a total load made up of individual loads to one or more power sources without overloading the power sources. The present invention will allow sizing of power sources to accommodate less than the maximum possible load and can prevent overloading of the power source by preventing a load which would otherwise immediately cause or which could lead to a future overload from being connected or alternatively by restricting the power supplied to that load and/or others. This operation is achieved by the intelligent connection and disconnection of individual loads as well as

the control of the power drawn from power sources by connected individual loads and/or control of power supplied to connected individual loads as will be described in more detail below.

Most commercial generators are well characterized for operations under various conditions, including but not limited to loading and environmental conditions, and the maximum available output power is known for any particular set of such conditions. The present invention is preferred to sense one or more of the various conditions which affect that maximum available output power and use those conditions along with the characterization of the generator to determine precisely what that maximum available output power is at a given time, what the expected available power will be at one or more times in the future as well as the present and future effect the connection of a particular load may have on available power. In that fashion the present invention can select loads to be connected to the generator or other power source to power the maximum number of loads and/or to operate nearer to or achieve optimum efficiency while at the same time monitoring the present and expected future load thus ensuring that the generator will not be overloaded instantly or during the duration of any particular connection.

The description of the preferred embodiment of the invention herein is made by way of example as an improvement to an electrical backup generator system to provide power to a typical home or small business in the event power from the power grid (i.e. the municipal utility power or street power) is lost. The preferred embodiment may also be utilized with more than these two (grid and backup generator) power sources, for example wind and solar power sources may be incorporated with grid and engine driven power sources. It will be understood to one of ordinary skill from the teachings of the preferred embodiment that the invention as herein described is not limited to the particular embodiment and the invention may be practiced in a manner to be utilized with other types and combinations of power sources and loads to achieve a desired level of performance for a particular system.

The elements and steps of the preferred embodiment are preferred to be implemented with electronic circuitry as will be well known to one of ordinary skill from the present teachings. As used in the description of the preferred embodiment, circuit is meant to be an electric or electronic circuit unless it is clear from the context that it is another type of circuit. Descriptions of, and nomenclature pertaining to, elements of the invention are given in respect to names of electrical and electronic devices or operations (e.g. switch, generator, processor or processor circuit, power grid, solar panel, wind turbine, fuel cell, communications, communications channel, interface or interface circuit) or a descriptive name of a function performed with respect to some device or condition (e.g. load monitor, generator monitor, load control, load switch, communications link) all as are well known to one of ordinary skill from the teachings of the preferred embodiment of the invention and context of usage. In some instances the name of the device is also descriptive as will be well known to one of ordinary skill.

The invention described herein is preferred to utilize intelligent timing for connecting and disconnecting of loads to one or more power sources including control of power supplied to or demanded by the loads in order that the total load on any one power source is kept at or below the maximum output capability of that power source, or alternatively at or near an optimum efficiency level, which may be at or below the maximum capability. The decision making used by the preferred embodiment of the invention for connecting, supplying and/or controlling a particular load to the power source is preferred to be responsive to the capabilities of the power source and the type of load to be connected (including one or more parameter of each), the priority or importance of the load to be connected, the timeliness of the load connection, environmental parameters which affect the power source and loads and the input of one or more persons desiring to use a device presenting a particular load. As used herein and in the claims parameter means a quantity of one or more property or attribute (e.g. of a device, physical property, substance or environment) which is treated as a constant. A parameter may at times change or be adjusted. Examples of parameters of interest herein include various horsepower, mechanical load, temperature, pressure (including altitude), humidity, power, wattage, voltage, current, including maximums, minimums, safe, starting, limited, instant, real time, near real time and timely. Quantities pertaining to parameters may be in analog or digital form and expressed as numbers which are suitable for use by the device(s) using or responsive to such parameters.

BRIEF DESCRIPTION OF THE FIGURES

FIG. **1** shows a simplified flow chart of a prior art transfer switch and generator controller having elements **1-11**.

FIG. **2** shows a simplified circuit diagram of a prior art power backup system having power grid **12**, generator **13**, generator and transfer switch controller **14**, transfer switch **15***a*, load main panel **15***b*, load sub panel **15***c* and loads **16-20**.

FIG. **3** shows a simplified circuit diagram of a prior art power backup system having power grid **12**, generator **13**, generator and transfer switch controller **14**, transfer switch **15**, loads **16-20** and load manager elements **14***a*.

FIG. **4** shows a simplified circuit diagram of a power backup system which incorporates a first embodiment of the present invention, the system having power grid **12**, generator **13**, transfer switch **15**, loads **16-20**, optional environmental, user & misc. sensors **21**, load switches **22***a*-**22***c*, load monitor **23***a*, generator monitor **24**, load control **25***a* and communications links **26***a*-**26***c*, **27***b* and **28***a* and optional communications links **27***a*, **28***b* and **28***c*.

FIG. **5** shows a circuit diagram of load control **25***a* with communications links **26***a*-**26**N, **28***a*, **30**, **31**, **32**, optional communications link **28***b*, interfaces **29***a*, **29***c*-**29***h*, optional interface **29***b* and processor circuit **33***a*.

FIG. **6** shows loads **16-18**, load switches **22***b* & **22***c*, load monitor **23***b*, communications links **26***a*-**26***c*, **36**, **40***a*, optional communications link **38**, **40***b*, interfaces **29***i*-**29***k*, **35**, switches **34**, and user input and user feedback module **39**. FIG. **6** also includes Load Limit **43** having current control circuit **44**.

FIG. **7** shows user input and user feedback module **39**, display **41** and user input keys **42***a*-**42***c*.

FIG. **8** shows a simplified circuit diagram of a power backup system similar to FIG. **4** which is a more elaborate embodiment of the present invention, the system having power grid **12**, generator **13**, transfer switch **47**, loads **16-19** and **48**, environmental, user & misc sensors **21**, load switches **22***b* and **22***c*, load monitors **23***a* and **23***c*, power source monitor **49**, load control **25***b*, communications links **26***a*-**26***c*, **27***a*, **27***b*, **27***d*, **28***a*, **28***c*, **45**, **46**, optional communications links **27***c*, **28***b*, load limit **43** and third power source **50** having power output via **51**.

FIG. **9** shows a more detailed circuit diagram of load control **25***b* with communications links **26***a*-**26**N, **28***a*, **30**,

31, 32, 45, 46, optional communications link 28*b*, interfaces 29*a*, 29*c*-29*j*, optional interface 29*b* and processor circuit 33*b*.

FIG. 10 shows a simplified diagram of the embodiment of FIG. 8 which includes elements 12, 13, 16, 17, 18, 19, 22*b*, 22*c*, 25*b*, 26*a*, 26*b*, 26*c*, 27*a*, 43, 45 and 47 as in FIG. 8. FIG. 10 also includes elements for recovering heat from generator 13 including heat exchangers 52 and 53, electrically controlled valves 54 and 55, valve control circuits 56 and 57, generator heat supply 58, generator heat return 59, domestic hot water supply 60, cold water supply 61, radiant heat supply 62, radiant heat return 63, domestic heat temperature sense link 64 and radiant heat temperature sense link 65.

FIG. 11 shows a simplified diagram of a combination load and power source which the invention may be utilized with including battery 68, battery charger 66, DC to AC inverter 67, connection to transfer switch output 71*a*, communications connections to load control 69 and 70.

FIG. 12 shows a simplified diagram of an embodiment of the invention which is used with an energy storage battery 68 and optional generator 72 communicating with load control 25*b* via optional communications link 73 with battery 68 usable as a backup power supply in the event of a power grid failure. FIG. 12 includes power grid 12, loads 16-19 and 48, load control 25*b*, load switches 22*b* and 22*c*, load limit 43, communications links 26*a*-26*c*, 45 and 46 and transfer switch 47, as in FIG. 8 and including battery 68, communications links 69, 70 as in FIG. 11. Battery charger 66 the same as in FIG. 11 is connected to the output of the transfer switch 47 via 71*c*, and DC-AC inverter 67 the same as in FIG. 11 is connected to an input of transfer switch 47 via 71*b*.

FIG. 13 shows a simplified diagram of a combination of load coupler 80 shown by example configured with typical air conditioner load 18 for coupling the load to the power source, in this example power from the transfer switch. Load coupler 80, described further with respect to FIGS. 14 and 15, may be utilized for an implementation of any of the load switches 22 if desired and communicating with load control via link 26*c*. Load coupler 80 may also be configured with a current control circuit 44 (not shown), with or without a relay, to be utilized as a load limit 43 for those types of loads which may utilize controlled current, as described herein.

FIG. 14 shows a detailed diagram of the preferred embodiment of load coupler 80 of FIG. 13 having current sense 23*d*, relay 34 which may be latching or simple type, optional current control 44, relay position circuit 79, battery & charger 74 responsive to power from the transfer switch to provide backup power 75, wireless communications link circuit 29*k* receiving backup power and coupled to antenna 76 (which may be internal or external to 80) to communicate wirelessly with load control via channel 26*c*. Also shown is microprocessor circuit 37 powered by backup power 75 and responsive to current monitor shown as sense 23*d*, transfer switch power voltage monitor 78, and relay position circuit 79, with 37 controlling relay 34 and interfacing with wireless communications link 29*k* and user interface 77 which may also receive backup power 75 if desired.

FIG. 15 shows a commercially valuable embodiment of load coupler 80 which is physically separated into two sections, a high voltage section 80H and a low voltage section 80L having multiple and various circuit connections 82 for connecting internal circuits of each section to the other and/or external devices. High voltage section 80H is configured to controllably couple power from the transfer switch to a load 18 shown by example as via an externally controllable latching or simple relay 34 having relay position circuit 79, section 80H further including current monitoring shown as sense 23*d*. FIG. 15 also shows a power supply 81 coupled to the power from the transfer switch, the power supply providing power, which is preferred to be a lower voltage safe for human contact, in response thereto. FIG. 15 section 80L includes a battery and charger circuit 74 to receive AC (or DC) voltage from an external source 81 to provide regular and backup power 84 preferably made available to external devices via one or more connection 82, the battery and charger circuit 74 also providing regular and backup (DC or AC) power 75 (hereafter referred to as backup power) for internal use in 80L, a microprocessor circuit 37 is powered by backup power 75 and responsive to current sense 23*d* (located in 80H), voltage monitor 78 (from transfer switch power via supply 81) and relay position circuit 79 with microprocessor circuit 37 operative to provide control signals 85 via external connections 82 and with microprocessor circuit 37 also operating to control relay 83 which relay has connections 82 for external circuits. Connections to some external circuits are preferred to be protected via protection devices (circuits) 86. Microprocessor circuit 37 further interfaces with wireless communications link 29*k* (which is powered by backup power 75) having antenna 76 and operating to communicate with load control (s) via wireless communications channel(s) 26*c*. Microprocessor circuit 37 is also coupled to user interface 77 (which may receive backup power 75 if desired) and to connections 82 via protection device 86

FIG. 16 shows a further embodiment of a load limit 88 controlling an oven 16 wherein a load control 25*c* responsive to the input power via 87 is incorporated with 88 along with a current control circuit 44 and current sense 23*d*.

FIG. 17 shows a further embodiment of a load switch 89 controlling a clothes dryer 17 wherein a load control 25*d* responsive to the input power via 87 is incorporated with 89 along with contactor 34.

FIG. 18 shows the further embodiment of load control 25*c* including a transformer 81 responsive to the input power via 87, a power supply 74, frequency measurement circuit 90 responsive to the frequency of the incoming power, user display 90 for displaying messages to a user, user input 92 by which a user inputs information and/or commands, timebase 93 facilitating timing measurements, current measurement circuit 95 responsive to 23*d*, switch/limit driver 94 coupled to current control 44 (or alternatively 34).

DETAILED DESCRIPTION OF THE PREFERRED EMBODIMENT

FIGS. 1-3 provide background for understanding of prior art electrical power backup power systems as they pertain to the present invention. One of ordinary skill will already know these systems and the FIGS. 1-3 are simplified to aid in understanding some of the shortcomings of the prior art which are overcome by the present invention. As just one example, it will be known that the connections shown in the various FIGS. 1-3 (and 4-18) often represent a plurality of actual circuits, such as the connection from the utility power grid 12 which may entail several conductors ranging from three for a single phase system to six or even more for multiple phase systems.

FIG. 2 shows a prior art power backup system to power some of the loads 16-20 utilizing a service connection to a power grid 12 as the primary power source and a generator 13 as the backup power source. For the examples herein the power grid is subject to loss of power or power fluctuations (e.g. brownouts) and supplies power where the cost of the

power varies from time to time. Generator **13** is used in the prior art and preferred embodiment examples with respect to an electric power generator having an internal combustion engine powering an alternator. It will be understood that power sources, loads and other elements of the described systems of the present disclosure have various parameters associated with them. Some parameters for example are the maximum output power of a source, which maximum output may change from time to time, the power output (e.g. timely, current or at the present time power output) of a source, the maximum power consumption of a load which maximum consumption may change from time to time, and the power consumption (e.g. timely, current or at the present time consumption) of a load. Such parameters may be a singular parameter for example such as a maximum voltage, wattage or current, or a plurality for example such as voltage and power, may include other factors such as a time or environment related factor, such as a maximum current at a given temperature or for a limited time. Load parameters, e.g. expected or maximum watts or current consumed by a load, and maximum output power parameters, e.g. maximum watts or current that can be provided by a power source, are of particular importance herein.

In typical installations the power grid **12** is connected via a service connection to the transfer switch **15***a* and distribution panels **15***b* and **15***c* all of which have a maximum rating. The service connection has a circuit breaker to prevent the total of the loads being powered (i.e. the total load) from exceeding that maximum rating of the service connection. In particular there is a circuit breaker (known as the main breaker) located on the power grid service, usually at the power meter, which will be known to disconnect all power to the transfer switch **15** and main panel **15***b* if it trips. There will also be a circuit breaker located in the generator **13** to disconnect all power from the generator when it trips. Obviously, having either of these circuit breakers trip is a serious inconvenience, especially if it happens when there is nobody available to reset the breaker, or during a storm, at night or other inconvenient time. Additionally each panel has circuit breakers which will trip and protect individual loads if too much current is consumed.

It will be understood that generator **13** is intended to also represent other power source devices to provide power in a desired form from power in another form or from stored energy. Generator **13** may for example be a wind turbine, solar panel, fuel cell, flywheel, battery, water, wind or steam turbine and may incorporate a DC to AC inverter circuit, generator or alternator to provide electricity if that is the desired output. Stored or collected power may come from gaseous, liquid and solid sources (e.g. fuels) such as hydrocarbons like natural gas, gasoline and other petroleum or solid hydrocarbons like coal, biomass sources, water power such as tides, waves and reservoirs, wind, sunlight, chemical and nuclear energy such as batteries, fuel cells, reactors, mechanically stored energy such as stored heat, flywheels, weights and compressed gas, and other forms as will be known to one of ordinary skill. Some devices may be both power sources and power loads, and store energy which may be converted back to AC (or DC) power to provide backup power, heating, to store in another form or to sell back to the electric utility. For example in respect to battery storage of energy, it is noted that the batteries in an electric or hybrid vehicle or the like may be used as both loads and power sources.

When used with a primarily electrical circuit, generator will mean an electric generator which is compatible with that type of electrical circuit. Names such as electric generator (which primarily outputs at least electric power), AC generator which primarily outputs at least AC electric power), steam generator (which primarily outputs steam power), solar panel (which uses solar energy as the source of output power), fuel cell (which uses liquid or gaseous fuel and a chemical reaction in a cell to output power), electric solar panel or electric fuel cell (which additionally mean to output electricity). As an example of the type of generator being known from context, a generator which provides power to a transfer switch and thereby provides backup power in place of an electric power grid which has failed, will be understood from the context (i.e. to replace electric power) to be an electric power generator. Generally the type of device being referred to in the specification and claims will sometimes be specifically named, but when not specifically named will be generically named (e.g. generator) and if intended to refer to a specific device that device will be apparent from the context. As just one example, transfer switch may be any type of switch, e.g. electrical, gaseous (e.g. steam) or hydraulic but if used in an electrical system to transfer electric power will be known to be an electrical type of switch and if used with a steam system to transfer steam power will be known to be a gaseous type of switch, e.g. valve. The teachings herein with respect to the preferred embodiment of electrical systems will nevertheless be understood to be applicable to other types of power systems.

FIG. **2** shows a simplified diagram of a prior art backup generator system of the type the preferred embodiment of the invention may be used with. Electrical power from power grid **12** is normally supplied via transfer switch **15***a* and main load panel **15***b* and load sub panel **15***c* to a home which consists of a group of electrical loads consisting of an oven **16**, clothes dryer **17**, air conditioner **18**, selected lights **19** and selected miscellaneous load items **20**. It is noted that the load **19** labeled lights is intended to represent high priority loads which are desired to always be connected to the power source including for example security lights, high priority lights, food storage appliances such as freezers and refrigerators, various alarms including intrusion and fire alarms, etc. A generator and transfer switch controller **14** is responsive to the grid power to control the setting of the transfer switch **15***a* to select either grid power **12** or generator power **13** to power the home, and to start and stop the generator **13** as needed. As is conventional in the art, transfer switch **15***a* is a break before make switch to prevent it from simultaneously connecting both inputs (on the left) to the output (on the right) while switching and is shown with a dashed line connecting the moving portion, which will be referred to herein as the swinger, to communicate with **14** to indicate that the switch is controlled by **14**. Practical devices called transfer switches incorporate both **15***a* and **14**, and sometimes **15***b* and/or **15***c* in a single metal enclosure. It is noted that FIG. **2** is a simplification for purposes of explanation of operation and one of ordinary skill will know that in practice prior art transfer switch **15***a*, panels **15***b* and **15***c* and the controlling mechanism will be much more elaborate and may incorporate solenoids, relays and multiple sets of contacts as well as mechanical safety and lockout features.

While FIG. **2** shows a direct connection from the power grid **12** to the transfer switch **15***a*, it is common that that connection is taken from the main panel **15***b* which will include a power meter, circuit breakers and possibly other circuitry. Typical maximum service ratings for homes are set by the size of the wiring from the grid to the home and typically rated at 100, 200 or 400 amps depending on the size of the home. Similarly the generator connection via the transfer switch **15***a* and sub panel **15***c* will have a maximum

rating, and the generator has a circuit breaker to prevent the total of the loads being powered from exceeding that maximum rating. Typical maximum ratings for backup generators are often substantially less than the service rating for the grid connection. To prevent the generator from being overloaded backup systems often include the distribution sub panel **15***c* and only high priority and low current loads such as **19** and **20** which are needed whenever the power is lost and whether the home is occupied or not are connected to that sub panel and powered by the backup generator. The rest of the high current loads which the generator is not capable of powering are connected to the main panel **15***b* and remain unpowered while the grid power is off and the backup generator is running. While transfer switch **15***a*, main panel **15***b* and sub panel **15***c* are individually shown in FIG. **2**, for purposes of simplifying the descriptions below main panel **15***b* and sub panel **15***c* will not be shown and the transfer switch will be labeled as **15**. One of ordinary skill will know that one or more distribution panel will be required for the systems described, even though they are not shown in the drawings.

Power grid is used herein in its common and ordinary meaning and refers to any commonly known and used sources of electrical power to homes and businesses, e.g. public and private electric utility companies. While such companies normally are part of a continent wide interconnection of power companies, that does not need to be the case. Further, while the preferred embodiment of the invention described herein with respect to a system having a power grid connection, it may also be practiced with only one power source such as generator **13**, or with a plurality of power sources with none of them being a power grid. Such embodiments will find particular use where no power grid is available or is not desired to be used such as in transportation vehicles, mobile or remotely located applications.

Electrical device (or load) names oven, clothes dryer, air conditioner and lights are used in their common and ordinary meaning e.g. electrically powered devices found in the home. The miscellaneous electrically powered devices (or loads) found in the home, include but are not limited to entertainment devices, appliances and other modern, electrically powered conveniences. It will be understood that load devices are used herein by way of example and it will be understood by one of ordinary skill that the inventive teachings herein will apply to other devices as well.

Generator **13** usually includes a rotating power source, typically an internal combustion engine powered by a liquid or gaseous fuel, or a turbine powered by steam or water power, an electric motor powered by storage batteries, a flywheel powered by stored energy, a hydraulic motor powered by a compressed gas or a fluid stored with potential energy, or numerous other types of rotating power sources which convert mechanically or chemically stored energy to mechanical rotation as is known to one of ordinary skill. In addition the rotating power source is typically coupled to an AC alternator (as compared to a DC generator) to provide AC power of the same voltage and phase configuration as that received from the power grid. In the U.S. the common power for homes is 240 volts single phase and will often be used in the examples of the Figures but it will be understood by one of ordinary skill that the invention may be utilized with many other power configurations.

The transfer switch **15** and the generator and transfer switch controller **14** are also somewhat simply referred to in these teachings. The transfer switch transfers power from the generator to the loads in the house in place of the failed grid power. The generator and transfer switch controller **14** controls starting and stopping of the generator and the position of the transfer switch. These elements are divided in this manner for ease of understanding the prior art and the present invention. This usage is somewhat different from the common use of these names in the art, wherein transfer switch generally refers to a device incorporating the generator and transfer switch control circuitry **14** (and often other circuitry) as well as the switch **15***a* to transfer the load from one power source to the other. In some instances, such as the previously mentioned Generac device, one or more additional switches are included to disconnect low priority loads during generator use. For ease of understanding the present invention these are all simply referred to herein as transfer switch numbered **15**, and the controls for the switch and generator (and possibly other devices) are numbered **14**.

Some backup systems operate to supplement power supplied by the power grid during heavy peak usage times such as very hot summer afternoons when the power grid approaches its maximum capability due to widespread use of air conditioning. In these instances the grid power may still be available but the generator is used to power some or all of the house loads, or the generator power may be synchronized to and paralleled with the power grid to provide part or all of the power to the house loads. When the house load is very small such paralleled generators may feed power back into the grid to in effect sell power to the utility company by causing the power meter to run backwards. These operations require a more complex control, transfer switch and generator operation than shown in FIG. **2**. The inventive concepts disclosed herein will also be useful in such systems. It will be recognized however that in such paralleled systems when the power grid fails it is important to disconnect the power grid from the generator in order to prevent damage to the generator or possible harm to workers who are repairing the grid failure.

FIG. **1** shows an abbreviated flow chart of the decision making process of the generator and transfer switch controller **14**. Processing steps are represented by rectangles, input/output steps by parallelograms, conditional or decision steps are represented by diamonds and flow directions are shown by arrows. Basically the flow chart operates to start the generator and move the transfer switch to the generator when the grid power fails. The decision making starts at start **1**, followed by sensing the grid power **2** to obtain information about the quality of the power, followed by a decision step **3** to decide if the quality of the grid power is sufficient (e.g. the power is on and within the range of expected voltage). If the power is on a next decision step **4** is entered to determine if transfer switch **15** is in the position to supply grid power to the home, if so the decision making returns to **2** and if not the transfer switch **15** is moved to the grid power position in **6**. The loop normally remains in operation until the grid power goes off causing the timer off step **5** to be entered from decision **3**.

If the grid power remains off for 5 seconds the process continues to the generator running decision **7**. If the generator is not running it is started in **8** and another 5 second delay **10** is entered. At the end of the 5 second delay the process returns to the input of **7** to verify that the generator is running, if not another start is performed and if the generator is then running the process continues to check the transfer switch position in **9**. If the transfer switch is in the position to provide generator power to the house the process returns to **2** to continue sensing grid power to see if it has returned to normal, and if the transfer switch is not in the

position to power the house from the generator it is switched in step **11** and then the process returns to wait for sensing the return of grid power **2**.

Compared to an actual prior art device the flow shown in FIG. **1** and accompanying description above is greatly simplified for convenience of understanding the basic operation of the system of FIG. **2**. For example for simplicity no step to stop the generator is shown, nor is the exit from **5** shown if power does not stay off for 5 seconds. Many additional steps, checks and considerations are usually found in commercially available systems to recognize and accommodate the many possible modes of short and long term power failure and to protect the generator. Such steps include for example a periodic (e.g. once a week) start and exercise of the generator and transfer switch to improve reliability and a delay in shutting down a generator which has been running in order to allow it to cool down without a load being applied. The timers **5** and **10** are greatly simplified and usually involve many other decision making subroutines and branches to avoid false starts of the generator during momentary power glitches and to allow the generator to attain proper speed, corresponding to proper AC power frequency and voltage, before confirming that it is running.

It will be understood from the description of FIGS. **1** and **2** that when power from the power grid is lost, the generator **13** is started and when it is operational the transfer switch **15** is moved so the power from **13** is coupled to the loads **16-20**. Importantly, the generator **13** must be designed so that it is capable of powering all of those loads when they are simultaneously turned on, otherwise the generator will be overloaded and its internal circuit breaker will trip. In extreme cases of overloading the generator may be damaged before the internal circuit breaker can trip. Often generators are intentionally designed to only provide power to handle a part of the total load, and the occupants of the house must remember not to turn on certain large loads, for example the air conditioner and oven, which would cause an overload. In addition, if those large loads are on at the time when power is lost, the occupants must quickly turn them off before the generator is started and transfer switch moved to prevent an overload. This all presents a substantial possibility of generator damage resulting from human error.

FIG. **3** is a simplified example of an improved prior art version of the backup system in FIG. **2** which provides power to a group of loads, including a set of uncontrolled loads and a set of controlled loads which may be simultaneously switched off if the generator becomes overloaded. After the controlled loads are simultaneously switched off they may then be automatically (and blindly) switched on in a sequential fashion according to priority, each additional load being switched a time period (e.g. 3 minutes) after the previous one. The previously mentioned Generac Nexus LTS Load Shed system is representative of a system of this type. FIG. **3** additionally includes load managers **14***a* which are contactors to switch the high current load on and off in response to a control signal. A contactor is essentially a high current relay which switches the load completely on or off. The Generac DLM Load Control is a contactor of this type with a control input which is wired to and controlled by the Generac Nexus system. If during the reconnection sequence a certain priority load again overloads the generator (e.g. it is blindly switched on without knowing if it will again cause an overload), that load and all lower priority loads are disconnected for a period of time (e.g. 30 minutes) before the connection is tried again. When grid power is available the generator & transfer switch controller **14** operates (via control signal connections shown by arrowed lines) all of the load managers **14***a* connect their respective loads.

When the generator is running, the generator & transfer switch controller **14** operates to detect that the generator **13** is overloaded (by sensing the frequency of the AC power produced by the generator) and causes all of the load managers **14***a* to simultaneously disconnect their respective loads from the generator. Shedding the nonessential circuits when the generator is overloaded helps protect the generator of FIG. **3** as compared to the system of FIG. **2**, however there are shortcomings in this approach. For example by detecting the power frequency the generator must already be overloaded to the point of not being able to supply enough rotating torque to the alternator to maintain proper speed. Short term speed variations resulting from momentary loads such as electric motor starting currents must also be accommodated. Most generators can handle significant excessive output currents for short periods of time and that is useful in providing large starting currents for motors, for example such as those required for starting air conditioner compressors. These large starting currents normally go away after a few seconds when the motor armature and its mechanical load have been accelerated to operating speed. Additionally, as will be recognized from the teachings herein, in some circumstances which will be described more fully below, it is unnecessary to simultaneously disconnect all of the low priority loads or to blindly reconnect them.

Accommodating such momentary high currents is common in the circuit breaker art, where circuit breakers are designed to trip according to a programmed load vs. time curve. For example a particular 10 amp breaker will trip with a 12 amp load after 30 seconds, may support a 15 amp load without tripping for 5 seconds, but will trip very quickly with a 20 amp load. Various thermal and magnetic technologies are utilized for such circuit breakers. For example a bimetallic strip may be used to trip with slightly high currents after those currents have persisted for enough time to cause the strip to heat and bend whereas an electromagnet is used to quickly pull a latch to disconnect for large currents. A generator will often have such a circuit breaker installed for protection. It is important that loads presented to the generator do not exceed the circuit breaker's load vs. time curve causing it to trip. Most such circuit breakers used in backup generators for homes and small businesses have to be manually reset.

The use of AC power frequency detection for control of load shedding is problematic. If the frequency detection is too sensitive unneeded shedding may occur, or if it is not sensitive enough, slow or no load shedding may occur with the possible result of the generator's circuit breaker tripping thus removing all power. A one size fits all frequency threshold used to cause complete disconnect of the load from the generator may allow overheating or other damage to the generator **13** under some combination of time and load conditions. It is preferred that the present invention control of the load shedding be designed to accommodate varying loads of connected loads, determine if a load can be safely powered before the load is connected and otherwise operate such that it prevents an overload from happening, rather than attempting to detect and cure the overload after it has happened.

Another problem occurs when the transfer switch first switches from the power grid to the generator with too many loads connected. A similar condition exists when a connected load instantly or quickly increases its individual load causing the total generator load to exceed the generator's capability. In such situations if the generator has been sized

such that it can not simultaneously power all of the loads which are connected, it will immediately go into overload. Depending on how fast the detection of the condition and disconnect of the loads takes the overload condition can continue for several seconds, or possibly even minutes. Most generators are designed to accept an instant 0 to 100% of its rated load change without damage (although not without serious speed and voltage fluctuations), however they may not be designed to accept an instant 0 to overload condition change which can happen when switching from grid to generator power, or a partial to overload condition which can happen when a connected load suddenly changes. Such overload conditions may damage the generator or, as with any closed loop system, cause the generator to become unstable, possibly even going into speed and/or power output oscillations if proper linearity and/or damping does not exist to make the loop stable for that overload condition.

The following FIGS. **4-18** are simplified diagrams given by way of example to enable one of ordinary skill to understand and practice the invention in small backup power systems, defined herein as those used for an individual home or business with a single or multiple phase service connection of 440 volts or less and 400 amps or less. It is often desirable to utilize a backup generator which is only capable of providing power for part of the maximum possible load which can be presented. In respect to FIGS. **4-18** the following brief descriptions will be useful. More detailed descriptions of these and other elements will be understood from the teachings below.

Environmental, User & Misc. Devices **21**. User interface, e.g. an iPad or computer type display with interactive software, Environmental Sensors e.g. for home & outdoor such as temperature, sunlight, humidity, wind, generator operating conditions, Misc. Devices e.g. vehicle and battery sensors (e.g. usage time and distances, charge, temperature) appliance sensors (e.g. wine cooler, freezer and oven temperature), vehicle battery charger and battery, communications (e.g. telephone, internet, wireless, alarm), motion sensors to detect when areas of the property, particular rooms, or the home are vacant or occupied.

Power Source Monitor **49** and Load Control Processor **25***b*. The Power Source Monitor is preferred to be a separate module because of its need to monitor the power source(s) outside the home but may be part of the load control processor. The Power Source Monitor may be installed at the backup power source and monitors its operating parameters and conditions which may affect its operation, for example such as ambient temperature. The load control processor is the computing unit of the system and may be part of the user interface (e.g. iPad) which is preferred to be located in the home but may also be part of other equipment. The load control processor receives information about the various components of the system, receives user input, inputs from various monitors and sensors (including a time clock) and controls the Transfer Switch, Generator and Loads according to various pre-programmed parameters and those inputs.

Load Modules **43**, **22***b*, **22***c*. Modules which communicate with the load control processor and which may provide information about the load, the load's environment and/or operate to permit control of the load. Load Modules include Load Limit Modules and Load Switch Modules.

Load Limit Module **43**. Load limit modules limit the load presented by various devices by e.g. current limiting, power factor adjustment and/or time modulation of current. Load Limit Modules may include load condition sensors such as voltage, current and power factor sensors and the type of load operation for communication to the load control processor.

Load Switch Module **22***b*, **22***c*. Load Switch Modules switch power to loads on and off. Load Switch Modules may include load condition sensors such as current sensors and the type of load operation for communication to the load control processor.

Controllable Load(s) **48**. These are loads which may be controlled directly without the need for a Load Module. Examples include electronically controlled devices such as heating and air conditioning systems, vehicle battery chargers, light dimmers & remotely controlled lights and internet and wirelessly controlled appliances.

Communications between the various system components **27**, **28**, **45**, **46** may be wired or wireless. For ease of installation are preferred to be via bidirectional wireless data links, for example such as via IEEE Std. 802.1X. For those elements which communicate in one direction the associated receiver or transmitter circuitry may be omitted.

It will be understood that many elements that are necessary for an actual system have been omitted as they will be readily known to the person of ordinary skill from the present teachings. Additionally many inventive features and elements which are described with respect to one Figure will not be shown in another Figure but it will be recognized from the teachings herein that such omitted features and elements may still be incorporated.

FIG. **4** shows a simplified diagram of the preferred embodiment of the invention in which the power grid **12** or a generator **13** may power a group of loads including set of uncontrolled loads and a set of individually switched loads. The invention may be utilized with the power grid alone, the generator alone, both, or with the generator serving as a backup during power grid failure. Heretofore overloads of the power grid service has typically been addressed by making the service, transfer switch and distribution panel(s) large enough to handle the maximum load that can occur. While that approach works well it is nevertheless expensive due to increased equipment costs and may become unworkable in the future. For consumers wishing to purchase electric and hybrid vehicles, having to upgrade their existing electric service to accommodate one or two vehicles and their associated high current chargers operating at the same time is an additional and costly consideration for such a purchase. In some instances the public utility may not be able to provide enough power via the existing grid to upgrade existing service and provide new service to everyone desiring such capability. Accordingly while using large service connections has worked well in the past, with the demand created by electric and hybrid vehicles may not allow larger capability service which effectively prevents overload from being used.

As an example, consider a family that wishes to purchase two new electric vehicles of the kind that could each use a 90 amp 240 volt charger circuit. If both drivers work during the day and wish to charge their vehicles when they come home from work that presents a substantial load to the electric service. Two of these circuits added to an existing 100 amp service would trip the service breaker if both chargers were simultaneously used. If only one charger was used any other high power load such as an electric stove or oven or air conditioner would trip the service breaker. Similar problems would exist for a 200 amp service. Upgrading to a 400 amp service would be costly, and might not even be possible if the utility company does not have an adequate transformer and grid wiring to the house. The

present invention will operate to intelligently manage the loads and prevent tripping the service breaker while at the same time allowing the family to set priorities for the use of power that can be safely delivered.

It is desired that the invention operate to ensure that the loads are controlled so that they do not overload the power grid service connection when power is provided by the power grid, or overload the generator when power is provided by the generator. One of the inventive features of the invention is that it may be determined whether or not an overload will occur, or is likely to occur at the time of connection or subsequently during that connection, before a load is connected. The inventive features of the preferred embodiment are described herein primarily in respect to preventing overloads of the generator **13** but it will be understood from these teachings that the invention may operate as well to prevent overloads to the power grid service connection. This feature of the invention will not only reduce possible damage or circuit breaker tripping during generator operation but will also reduce possible damage or circuit breaker tripping during power grid operation.

FIG. **4** has the same power grid **12**, generator **13**, transfer switch **15** and loads **16**-**20** as with FIGS. **2** and **3**. Generator and transfer switch controller **14** is not shown in FIG. **4** for simplicity, however it is preferred that load control **25***a* communicates with either the **14** or **15** in order to verify the position of the transfer switch. In addition FIG. **4** shows load monitor **23***a* to monitor the load on the generator (which is also the power supplied by the generator) and the timely power output from the generator is conveyed to load monitor **25***a* via generator monitor **24**. Load monitor **23***a* also provides timely power output from (e.g. provided via) the service connection and thus the load on the power grid, when the transfer switch is in the power grid position. In that the invention finds applicability for preventing overloads it will be understood that it may be utilized for any power source or combination of sources, including off grid systems such as remote terrestrial, aircraft, on and off road vehicles and marine applications with or without connection to the power grid.

It is preferred that the timely power output is an instantaneous measure of the current provided by the generator. Because most generators incorporate voltage sensing and correction circuitry, often by way of controlling the power applied to the exciter winding in the alternator, the output voltage is maintained nearly constant. Of course the voltage (and power factor if desired) may be measured and utilized as well. By knowing the output voltage of the generator is being held to a constant value, for example 240 volts in a single phase output, by measuring or sensing the instantaneous current flowing from the generator, an instantaneous measure of the output power may be had. It may also be desirable to utilize a measure which is not instantaneous. Examples of some non instantaneous measures include an average over time, a time related measure of output power, a measurement with reduced noise, an approximation of the average load provided to the generator, to provide a measure of the resulting heating of the alternator or engine, to provide a measure of fuel consumption by the generator, to provide a measure of the power consumption by the load(s).

A generator monitor **24** which receives data from load monitor **23***a* and communicates that load information to a load control **25***a* via communications link **28***a*. It is noted that load monitor **23***a* may be located in the circuit input to (to the left of) the transfer switch **15** in order to monitor the load only when power is provided by the generator. Monitoring the output of the transfer switch is preferred e.g. it is useful for characterizing load parameters e.g. current or wattage consumption, as individual loads are turned on and off (or turn on and off on their own) at any time, and for controlling the load presented to the grid so as not to exceed the service connection capability as will be explained below.

FIG. **4** also shows load switch **22***a* is responsive to load control **25***a* via communications link **26***a* and operable to connect and disconnect oven **16** from power coming from the transfer switch, load switch **22***b* via communications link **26***b* is operative to connect and disconnect the clothes dryer **17** and load switch **22***c* via communications link **26***c* is operative to connect and disconnect the air conditioner **18**. It will be understood from the teachings of the present invention that one or more load switch **22** may be removed (for controllable devices or high priority devices as described herein) or replaced with a load control **43** or other types of control devices as will be described in more detail with respect to FIGS. **6**-**9**. While load switches **22** have been described as being responsive to load control **25***a*, it will be preferred that they also include bidirectional communications capability in order that load control **25***a* may determine and/or verify the state of the switch (e.g. open, closed, dropped or other information) and further it is preferred that the switch include other functions as will be discussed below. In addition, it will be understood that load switches may be operated without a separate load control **25***a*, as that function may be incorporated within the load switch **22** (or load limit **23**).

As used herein, communications and communications link is meant to encompass the conveyance of information from one point to another by one or a plurality of electronic circuits and may be the same or different for each type of information and each type of connection as desired. The communications links may be of any type suitable for communicating the particular information desired over the desired distance at an adequate speed and resolution with necessary reliability and may be continuous or not in order to fit a particular application of the invention. The information may be in, and may be communicated in, any suitable form, or forms e.g. analog, digital, optical, magnetic, electromagnetic waves, wired or wireless and may be communicated in single direction, bidirectional, singular or redundant form, and the communication may use handshaking, networking or broadcasting, may be multiplexed in any fashion, networked, daisy chained, point to point or otherwise as desired to fit a particular embodiment of the invention. For example if wired communications links are desired, RS-232, IEEE 1901 or USB may be used or for wireless ZigBee, IEEE 802.1X, Bluetooth, or Wi-Fi may be used, all being well known to one of ordinary skill. The communications may be simply contained within a dedicated implementation of the invention or may utilize a network covering a larger area for communications, for example via the internet. The invention described herein and/or its communications circuits may be shared or included in other systems and devices such as for example a home control system. Communications theory is a broad but well known field of art readily available to one of ordinary skill wishing to practice the invention, accordingly the communications links will not be discussed extensively herein.

Communications between the load control **25***a* and load switches **22***a*-**22***c* (or load control **43** described below) are provided by communications links **26***a*, **26***b* and **26***c* respectively. In addition, communications between load monitor **23***a* and generator monitor **24** is provided by communications link **27***b*. Communications between generator monitor

24 and load control 25*a* is provided by communications link 28*a*. Additionally optional communications link 27*a* may be provided between generator 13 and generator monitor 24, and additional communications may be provided by optional communications link 28*b* between generator monitor 24 and load control 25*a*. These communications links are preferred to be utilized to provide generator monitor 24 and load control 25*a* with, inter alia, additional information about the operation of generator 13 and to communicate back to generator 13 and generator monitor 24. Various parameters of the connected devices may be communicated to load control 25*a* as well.

Many prior art generator systems incorporate digital engine and alternator control systems which incorporate monitoring of the performance of the generator. Such monitoring includes determining the engine and alternator temperature, engine overload, voltage output, RPM, AC power frequency, current and power output for each leg of the alternator, total current output from the alternator, power factor, and percent of true total available power being supplied to the load. These control systems often further include over current warning, under frequency warning and overload warning (by measure of current and/or frequency). In many systems it is desirable to communicate with these control systems to provide some or all of the monitoring information and device parameters to the load control 15 for use in its load connection and other decision making. A load shed signal, responsive to a low frequency or over current condition or both, indicates the generator is overloaded, is also available on some systems. Assuming adequate information about the operation of the generator is available directly from the engine and alternator control systems, that information may be coupled directly to load control 25*a* via a communications link (not shown) making load monitor 23*a*, generator monitor 24 and their communications links redundant in respect to monitoring the generator so that they may be eliminated in that respect. Load monitor 23*a* is still desirable for use to characterize loads and for timely monitoring of the load presented to the power grid, which is also the timely power output from the service connection, as previously discussed. In the instance where the power grid output is desired, 23*a* may be located at any point on the power grid circuit, such as the input or output of the transfer switch 15.

It is preferred that load control 25*a* operate to provide power, either directly or indirectly e.g. via generator monitor 24, to all of the devices to which it is connected for purposes of communications and/or sensing operation. It is also preferred that load control 25*a* (as well as the devices with which it communicates wirelessly) include its own backup power source, such as a rechargeable battery, in order that it and the devices with which it communicates may continue to operate without interruption whenever its primary power source fails such as during the time interval between the failure of power from the power grid and the supply of power backup power from the generator. Of course for wireless communication links it is preferable that the various wireless devices have their own power source(s), including backup if the device is critical to operation during outages of that source.

One or more optional additional communication link(s) shown in FIG. 4 by 28*c*, may be provided between load control 25*a* and other optional devices such as sensors, information sources, displays, feedback, etc. shown as environmental, user and misc, devices 21. The display and feedback elements used in respect to the user may be combined if desired, for example such as with a touchscreen. These devices can include various sensors, for example such as temperature sensors to monitor outside temperature useful in controlling air conditioner operation, engine or alternator cooling air inlet or exhaust temperature useful in determining genset load, refrigerator or freezer temperature to determine if additional cooling is needed. The sensors for example may be utilized by 25*a* in the setting of priorities for loads to be connected to the generator. Such devices are desired to communicate with the load control as will be described further by way of example below.

Sensors and other components suitable for interface with the processor of 25 and/or use in practicing the invention are available from Analog Devices of Norwood Mass., Texas Instruments of Dallas Tex., National Semiconductor of Santa Clara, Calif., Sensirion of Westlake Village, Calif. and many other suppliers as will be known to the person of ordinary skill in the art from the present teachings. Additionally the load control of the invention herein may communicate with other devices or services within or outside of the home area such as via telephone, internet, long distance wireless and the like e.g. in order to provide and receive information as well as handle and generate requests regarding power consumption, the devices which are connected, available for connection and the like, as will be described in more detail below.

Generally the communications links which are considered desirable to practice the preferred embodiment (i.e. the best mode) of the invention are shown in FIGS. 4 and 5 with solid lines with solid arrows showing the primary direction of communications. For example the load information from load monitor 23*a* is communicated to load control 25*a* by communications link 27*b* which is shown in a solid line with a solid arrow. Additional communications which may be desirable to practice advanced features of the invention are shown with dashed lines and arrows, for example the environmental, user and miscellaneous devices 21 communicating with load control 25*a*.

Load switches 22*a*-22*c* are preferred to be of a latching, dropout type which will automatically open circuit when power to the load switch (from transfer switch 15) is lost and thereafter and must be subsequently directed to close their circuit (after generator power is available via transfer switch 15) to provide power to the load. Accordingly when power from the power grid is lost the load switches 22*a*-22*c* will switch to open circuit and remain in that state until they are closed by load control 25*a* thus preventing a generator overload when the transfer switch selects the generator output. Other switch types, or load control circuits, e.g. such as 43, or load controls, discussed below, may be utilized as well as will be known to person of ordinary skill from the teachings herein. Additionally, while the load switches 22*a*-22*c* and load control 43 below are shown as separate units they may be combined with, or incorporated in the transfer switch or its control or in particular loads. The parts or all of the invention are also suitable for being combined with or incorporated in the generator, and may also include transfer switch control and/or transfer switch as will be known to one of ordinary skill from the teachings herein.

After a grid power loss the generator 13 will be started and transfer switch 15 will be switched to couple generator power to the house under control of the generator and transfer switch controller 14 (not shown in FIG. 4). At this time load monitor 23*a* will operate to measure the electrical load presented to the generator by the house, which at this point of this explanation is the load presented by the lights 19 and miscellaneous loads 20 since load switches 22*a*-22*c* are preferred to have switched, and remain open when grid

power was lost and thereafter until turned on. Accordingly, **23***a* provides the timely power output of the generator.

Because the voltage out of the generator is known, for example 240 volts, the load monitor **23***a* may simply be a current sense coil, inductor, transformer, sensor or integrated circuit which provides an analog voltage output that is proportional to the electrical current supplied to the loads by the generator. Rogowski coils such as that described in U.S. Pat. No. 6,313,623 to Kojovic et al. are particularly useful in that they can respond to fast changing currents and are not prone to saturation as are iron core transformers and coils and are reasonably immune to electromagnetic interference. The output of **23***a* is coupled to generator monitor **24** where it is preferred to be converted to digital with the digital value of the current being coupled to load control **25***a* via communications channel **28***a*. Various other types of known load monitors are readily available and may be utilized and coupled to load control **25***a* as will be apparent to one of ordinary skill from the teachings herein.

As previously described, load (and other generator) information may be taken directly from the generator. For example the aforementioned Cummins model GGHE generator includes their PowerCommand control module which provides a wealth of information about the operation of the engine and alternator over RS-232 and other communications links. Many other generator manufacturers provide similar modules and functionality. It should be kept in mind however that the information provided by these modules may not always be accurate due to cost savings and tolerances. For example an overload indication may respond only to electric power output but not measure engine or alternator temperature. If the generator is operated at significant altitude, or on a hot and humid day, the cooling system may not be able to prevent an over temperature type of overload from occurring even though the power output is otherwise below that which would generate an overload signal. Accordingly it is desirable that load control **25***a* be capable of sensing several parameters of the generator, and that it may be programmed or otherwise set to operate in response to those parameters and the particular generator and environment.

Load Monitor **23***a* may be used to determine the actual kilowatt output by measuring both voltage and current and may also be used to determine the power factor (the ratio of active power to the arithmetic apparent power) of power being supplied to the load. Calculations may be performed in load monitor **23***a*, or generator monitor **24** or load control **25***a* as desired, however in this example it is preferred that **23***a* sense active and apparent power by sensing or measuring the present voltage and current in real time (or near real time), transmit those values to generator monitor **24** in real time (or near real time) where they are converted to digital in near real time with the digital values being communicated to load control **25***a* in near real time where the calculations of power factor and load are performed. By using real time or near real time values of voltage and current the relative phase of the two is preserved and that phase information can be used in the calculations to timely determine the power output of the generator which is used to determine the available power for other loads. As used herein, timely will be used to mean instant, real time, close to real time or a suitable time. In particular timely voltage, current, wattage, power or other quantity or parameter will mean the quantity of, or value representing the quantity of, the parameter existing at a time which is suitable to be useful in the operation of the invention. For example timely voltage output or power output values may be measured and transmitted to the load control with some time delay which delay is not long enough to impair the proper operation of the load control.

For this explanation, load control **25***a* will be assumed to know at least one maximum output power parameter e.g. maximum wattage or current of generator **13** (or a plurality of parameters e.g. its maximum output current vs. time capability). The maximum output power parameter is compared against the actual output at the time as measured by **23***a* and the remaining available power at the time is then calculated. Other parameters may be utilized to determine the projected power available at a future time or over a future time period may also be calculated. It is also desired that the power parameters e.g. initial current requirements and current vs. time curve(s) of each load **16-18** are known to the load control **25***a*. It is desired that each of the loads **16-18** has associated with it one or more known priority parameter(s). As used herein, know and known mean to have been previously stored in a memory and available e.g. having been previously manufactured with, programmed with or measured. All such parameters are preferred to be manually or automatically changeable as will be described below. In reality it may be that one or more parameters is not know at the time and must be determined or estimated as will be described further below.

After generator power is made available via the transfer switch, load control **25***a* operates to determine if the highest priority load **16-18** can be supported by the available power of generator **13** and if so load control **25***a* causes the load switch associated with that load to be closed via commands conveyed to the switch by its corresponding communications channel. Next load control **25***a* operates in response to the new power measurement from **23***a* to determine if the next highest priority load **16-18** can be supported by the available power from the generator. If so that load is connected by command sent via its switch's corresponding communications channel. Likewise the third priority load requirement (in this case the last load of the three) is checked against available generator power and the load connected if sufficient power available. While only three controlled loads are shown in FIG. **4**, it will be known from the present teachings that the number of loads which may be controlled is not so limited and additional controlled loads and corresponding communication links (e.g. **26***d*-**26**N) may be utilized. In the event one or more of the loads cannot be connected because of insufficient available power from the generator, the load control **25***a* will periodically compare the available power supplied by the generator to the power required by the load and if possible connect the load. It may be that available power for a load results from one or more previously connected loads no longer requiring power, for example the clothes dryer is finished and that load may be disconnected to prevent it from being turned on and creating an overload. Or, the air conditioner may require less power to run because outside air has cooled and that additional information may be utilized by load control **25***a* to determine it is safe to connect another load.

Load control **25***a* is preferred to operate in substantially continuous mode to constantly compute load requirements and generator capabilities to connect and disconnect loads according to priorities as a result of changing loads and priorities. Lower priority loads may be disconnected to accommodate higher priority loads. Environmental, user and other parameters may be utilized by load control **25** in order to determine that it is safe (or that there is a high probability that it is safe) to connect a particular load. It is preferred that load control **25***a* ensure that loads such as air conditioners

which should not be cycled too quickly remain disconnected and/or remain connected for appropriate amounts of time. Load control **25***a* also monitors the generator **13** for overloads, and other parameters such as minor equipment failures such as slight overheating and chooses which loads to disconnect, or in the event of a significant failure may change the transfer switch **15** back to the grid power position (even though there is no grid power). Of course load control **25***a* will monitor grid power and change the transfer switch **15** back to the grid power position when power returns, meets expected parameters and is expected to continue meeting those parameters. It is preferred that after the transfer switch returns to grid power that loads are reconnected one at a time in order to prevent a large instantaneous power demand surge.

Although continuous operation is preferred, the invention may be practiced with other types of operation as well, especially when power consumption of the load control is intended to be kept to a minimum. It may be operated at periodic intervals or may be caused to operate only when one or more parameter of the system changes appreciably. In one alternative, load control **25***a* may operate in a low power standby mode, only checking for the presence of power from power grid **12** and remain in standby as long as grid power is present, but change to a more active or fully active mode if grid power experiences problems such a fluctuations in voltage or frequency (outside of expected parameters), or failure.

It will be appreciated from these teachings that load changes on the generator **13** may occur during operation because the switched loads **16**-**18** (if connected) or the unswitched loads **19** and **20** may change, and those changes may be communicated by the generator monitor **24** via **27***b* or otherwise to provide data via generator monitor **24** to load control **25***a* which may use this data to characterize and store load characteristics. For example if a request is made of load control **25***a* to turn on clothes dryer **17** via load switch **22***b*, the change in current sensed by load monitor **27***b* over the next few minutes can be stored and used as some of the parameters, e.g. starting and current after initial warm up, for that load. In this fashion unknown parameters may be determined or estimated and known parameters may be updated. While this type of measurement might be interfered with by other loads changing, if several consistent measurements and some inconsistent measurements are made for a number of dryer requests, it is probable that the consistent measurements are reasonably accurate. The consistent and inconsistent measurements may be determined by correlation or other statistical matching techniques. The consistent measurements may then be averaged to remove small variations due to dryer load, ambient temperature and other such changes. Of course more accurate measurements may be made by directly monitoring the dryer load as will be discussed below.

FIG. **5** shows a more detailed diagram of load control **25***a*. Communication links provide for communications between a processor circuit **33***a* and various devices as discussed herein. Load control **25***a* contains interface circuits **29***a*-**29***h* to interface communications channels **28***a*, **28***b* (optional), **30**, **31**, **32** and **26***a*-**26**N to a processor circuit **33***a*.

The processor circuit will include a processor, e.g. a digital machine performing logic, computing and/or program execution operations which machine accepts data and runs (i.e. executes) logic operations, computing operations and/or program steps to produce results. The processor circuit will also include supporting circuitry to facilitate the processor accepting data, executing one or more logic operations, computing operations and/or program(s), produce and utilize the necessary results and communicate with other components and devices. The processor circuit and its various elements may be of any of the types suitable for performing the various desired ones of control, monitoring, storage, communications, calculation and decision making operations described herein which are necessary to implement a particular version of the invention. The processor circuit may be implemented with any type(s) of circuit devices currently known or which will become to be known in the electronic control systems art including but not limited to analog and digital circuits, LSI, VLSI, ASIC, PLD, CPLD, FPGA, DSP, IP Core, Array, microcontroller, microprocessor, Multicomputer, RISC or CPU integrated circuits.

Processor circuit **33***a* may also include one or more interface circuits similar to **29** (thus eliminating one or more interface circuits **29** which are external to **33***a*). A particular processor circuit may be chosen for use in implementing the present invention by one of ordinary skill from the teachings herein in view of other considerations as well, e.g. power consumption, cost, complexity, ease of use, speed of operation and flexibility of operation. Examples of such computer circuits include PCs using Windows, Linux or other operating systems, Apple products such as iPhone, iPad, iPod, Android product such as the Asus Eee Pad tablet, various RISC, parallel microcomputer and embedded devices. While the processor circuit **33***a* has been described in the singular, it may be implemented by multiple circuits or devices as desired.

Communications links **26***a*-**26**N, **28***a* and **28***b* operate as described previously and in further detail below. Communication links **30**, **31** and **32** (in FIG. **4** as part of **28***c*) communicate with one or more environmental, user and miscellaneous devices (shown in FIG. **4** as part of **21**). Communication link **30** is used to supply data from a user input module(s) to processor circuit **33***a* of load control **25***a* and if desired communication link **31** operates to supply data from the processor circuit **33***a* of load control **25***a* to the same or different user module(s). It is of course possible that such data may be supplied by a single bidirectional communications link as indicated by the dashed arrow on **30** and **31**. Data to and from other auxiliary devices may be communicated to and from processor circuit **33***a* of load control **25***a* by one or more communications link(s) **32** as will be discussed further below. Processor circuit **33***a* communicates via communications links **26***a*-**26**N to communicate with load switches or replacement devices **1**-N respectively to cause loads to be connected to the power source (via transfer switch **15**) and if desired to receive data from one or more load switches or replacement devices. It will be understood that the preferred embodiment of FIGS. **4** and **5** may utilize a particular processor circuit **33***a*, for example the Asus Eee Pad tablet wherein various other elements of FIGS. **4** and **5** are provided by **33***a*. In the present example all of the user inputs and feedback devices are preferred to be provided by the Asus Eee Pad touch screen and communications links **26***a*-**26**N, **28***a*, **28***b* and **32** being provided via its IEEE 802.11 and/or Bluetooth wireless communications capability.

As a simplified example to aid in understanding the operation of the load monitor and load control of the preferred embodiment, consider a generator which because of its existing load and internal temperature can provide 30 amps for up to 5 seconds and 20 amps for 5 minutes and 18 amps after 10 minutes. Now consider an air conditioner which requires 30 amps for 4 seconds to start, 20 amps to run after that for 1 minute and then increasing to 21 amps as the

condenser coil heats thereby causing the head pressure and compressor current to increase. Starting the air conditioner and running it for 1 minute would be possible without overloading the generator. After 1 minute the condenser coil heats and the air conditioner would overload the generator by 1 amp and disconnecting it would be advisable. After 10 minutes the generator would be overloaded by 3 amps and would need to be disconnected because of the substantial overload of the generator. It is desirable that the load control also keep track of the operating characteristics of the other loads which are connected. By knowing the characteristics of the generator and load(s), the load control can make a decision of whether to connect the load, which in this example would not be advisable.

As a further example, add to the above example an ambient temperature monitor to provide an environmental parameter. Assume the load control **25***a* records a decrease of the ambient temperature due to cold rainfall with the internal temperature of the generator decreasing for a given load which in turn will allow a somewhat larger load to be accommodated. As used in this context records means to store a plurality of values of the same changing parameter, in this instance temperature, over a time period. The rainfall may also be sensed and recorded, For the air conditioner compressor a decreasing ambient temperature will lead to a reduced condenser coil temperature, decreased compressor head pressure and decreased compressor current draw. In this instance, depending on the rate of temperature drop, the expected increase of generator capacity and expected decrease of compressor current, it may be possible to predict that the air conditioner may be safely connected to the generator.

Adding a further environmental parameter to the example, it is likely that humidity will increase due to the rain and the higher humidity air will decrease the maximum torque output of the generator's motor. This additional environmental parameter may be sensed and recorded for utilization by the load control **25***a* in determining the maximum output power which will be available in the near future. Because humidity also affects the cooling of the condenser coil by airflow across the coil, this may be taken into account by load control **25***a* as well. It will be understood that timely determinations of generator maximum output power as well as load power consumption for a given load may be made by using various environmental parameters. It will be further understood that determinations of upcoming generator maximum output power as well as upcoming load power consumption for a given load may be made by using various changing environmental parameters, upcoming meaning over at least the next hour unless otherwise specified.

To continue the above example, consider the same generator capability as above, i.e. 30 amps for up to 5 seconds and 20 amps for 5 minutes and 18 amps after 10 minutes. Consider a different load, an oven which will draw 25 amps for 5 seconds, 20 amps decreasing to 15 amps over 3 minutes and 15 amps intermittently thereafter as the oven thermostat switches the heating element on and off. This load can be safely connected to the generator since it will not exceed the generator's capacity at any time.

Of course, in the above examples it is assumed that when a connection to the air conditioner or the oven is made that device will be in operation and will immediately begin loading the generator. It would be useful to know if each device would in fact be in operation or could be in operation at some time after connection. As an added factor in the decision making it would be useful to input the status of the device (e.g. on or off as a parameter), or otherwise determine the likelihood that the device would present a load if connected. This consideration relates to establishing a priority for a load, for example if the oven or the air conditioner is turned off then it would not present a significant load if it is connected. If the indoor or outdoor air temperature were low it is unlikely the air conditioner would present a load if connected. If the oven were operating before loss of grid power the thermostat will likely power the heating element when the oven is connected or within a few minutes thereafter. It is desirable for load control **25***a* to record and use these parameters in its load connection decision making.

As a further example of the operation of the load control **25***a* consider the priority of the loads. If the time of day (sunset) is after the normal time that dinner is prepared in the oven then the oven has a relatively low priority. If the temperature in the house is hot, the air conditioner has a high priority. If generator capacity is available the air conditioner would be connected instead of the oven. On the other hand, if the oven is in use when the grid power fails it is reasonable to assume food is being prepared. The interruption of power while food is being prepared can cause a serious problem for the occupants of the house making the oven a very high priority load. If the inside temperature of the house is at a reasonably comfortable level, and if generator capacity is available the oven would be connected instead of the air conditioner. The oven use likely will end within an hour or two and at that time it may be possible to connect the air conditioner, meanwhile the inside temperature of the house will likely not rise to uncomfortable levels. It is thus preferred that load control **25***a* include a real time clock and calendar feature, coupled with calendar factors such as sunrise and sunset, identification of local temperature norms, highs and lows for each calendar day and other information such as load usage habits, as will be useful in managing generator operation and loads.

If the oven was operating in a self cleaning mode instead of food preparation mode when grid power failed as detected by steady and higher then normal current draw. It is preferred that the oven current draw be recorded by the load control **25***a* and used to determine that the oven was in cleaning mode. That determination is preferred to be incorporated into the assignment of priority to reconnecting the oven. Since oven cleaning is not as important as preparing food, that cleaning can be delayed while other higher priority loads such as the air conditioner are connected. Of course it will be desirable to allow the occupants of the house to make the decision as to applying power to the oven or the air conditioner as will be explained further below. A temperature sensor, part of **21**, may be provided for a refrigerator or freezer and that temperature is used in determining the priority of connecting the associated load. For example if the freezer temperature is well below the safe limit the freezer would be determined to be a low priority load whereas if the temperature rises to be near the safe limit the freezer would be determined to be higher or high priority load.

Secondary factors, such as the time of day and decreasing ambient temperature of the above example are also preferred to be taken into account in deciding to connect a particular device to or disconnect it from the power source. Such factors include, but are not limited to, calendar data, load usage habits, one or more parameter of the load for the particular device e.g. maximum possible load, expected load for current conditions, projected changes in the load with time or conditions, starting and surge currents (e.g. the starting current of an electric motor), power factor of the load such as resistive, capacitive or inductive type loads, the

probability that a load will need to be connected or disconnected during the near and distant future, damage done by failing to connect a load or by disconnecting a load once connected. The short and long term ability of the power source to supply power in known or projected amounts, environmental factors such as ambient temperature, humidity, altitude, quantity of fuel available, fuel delivery rate, quality of fuel, cost of fuel, cost of supplying power from a given power source vs. cost of purchasing or supplying power from another power source and environmental effects of supplying power from a given power source.

In order to evaluate various factors and parameters used by the load control **25***a* for decisions to connect or disconnect loads, information will need to be available to the load control. It is preferred that the load control be programmable in order to store such information, however that information may be incorporated at manufacture, or may be learned by the load control by monitoring and recording parameters e.g. the operation of various loads, as will be explained further in respect to FIG. **6**. As a simple example the current and time parameters of the oven may be recorded to compute current vs. time curves from initial turn on until reaching temperature for both cooking at different temperatures and cleaning operation of the oven can be used in subsequent decision making. The higher the oven thermostat is set, the longer it takes for the thermostat to reach its first cycle and the more frequently it cycles, which information may be utilized to characterize the oven operation.

Of course those time and cycling parameters are also influenced by the mass and initial temperature of the food being cooked but about half way into the cooking time when the surface temperature of the food approaches the oven setting, that influence is greatly decreased. Curves for different temperatures as determined by the time from turn on until first thermostat cycle and then the cycle time thereafter can be recorded. When the oven is first started in a new cooking cycle, the temperature the oven thermostat is set to may be estimated from the time of turn on to first several thermostat cycles and comparison to the curves computed for previous operations. While such determinations are not absolutely accurate they will nevertheless provide an approximation which load control **25***a* may use in determining whether or not to connect a load. In some applications the oven may be configured to communicate directly with load control **25***a*, to provide useful information such as thermostat setting, cooking time and/or oven temperature.

FIG. **6** shows the preferred embodiment of the invention with various embodiments of load switches **22***b* and **22***c* (note load switch **22***a* of FIG. **4** is replaced with load limit **43**) and a combination user input and user feedback module **39**. Load limit **43** includes a current control **44** to control current supplied to load **16** which control may, if desired, include complete disconnect of load **16** (an electric oven in this example) to/from the power source selected by the transfer switch **15**. As just one example of a load limit device which may be utilized for **43**, consider a remotely controlled light dimmer switch commonly found in the home and connected to a 250 watt incandescent light bulb. The light bulb will draw a full load of 250 watts of power if connected directly to the 120 volt power but a load limit circuit which in this example is the dimmer will limit the amount of power supplied to the light bulb.

Such load limiting circuits are well known in the art and include current limit circuits which operate to prevent a current from exceeding its prescribed limit, which in the present example is set in response to load control **25***a*. Constant current circuits may be also used for **44** and operate to maintain a preset current through a range of a variable load, which current in this example will be set in response to load control **25***a*. For clarity, as used in the present specification and claims a load limit (or current control) device limits the power supplied to a device which if connected directly to the power source under the same conditions is capable of consuming more power than that the power delivered via the load limit. This usage is in contrast to a controllable load for which the load itself is controlled so that the amount of power that is consumed when connected directly to the power source is controlled. As a simple example, remote controlled room heaters are such a controllable load.

It will be further understood to one of ordinary skill from the teachings herein that other types of control circuits may be utilized for **44** to control the power supplied to the load, e.g. phase vector drive circuits, variable frequency circuits, direct torque control, SCR and thyristor circuits, pulse width modulation and chopper circuits, and various soft start circuits, many of which are commonly used as drive circuits for electric motors. Some of the other circuits which may be utilized operate by reducing the amplitude of the supplied voltage, or by reducing the duty cycle of supplied current or altering the phase of the voltage and current applied to the load, and various combinations thereof. One of ordinary skill will be able to select a particular type of circuit for use with a particular load type.

Load limit **43** communicates with load control **25***a* via communication links **26***a* and **36** in order to send and receive data. Interface **29***i* couples the communication link **26***a* to current control **44** to allow the load control **25***a* to operate current control **44**. While shown in respect to an electric oven in this example, it will be understood from the teachings herein that load limit **43** may be utilized with other types of loads, and will be particularly useful with high demand loads, for example heating and other resistive loads, battery chargers, electrolysis and other electro-chemical loads, in order to limit the maximum amount of power the load draws. One of ordinary skill will also understand that many types of high demand loads do not lend themselves to operation with particular load control circuits, for example many large constant speed rotating machinery loads which are desired to operate synchronously with relatively fixed voltage AC power and thus are difficult to use with variable voltage control circuits.

Load control **25***a* may cause the load to be controlled in discrete levels, for example full, 75%, 50% etc. or may cause the load to be controlled in essentially continuous fashion, for example 1% or smaller increments from 0 to 100%. It is desirable however that many loads such as the oven be continuously provided with some minimum amount of power to power clocks, timers, control circuits and the like in order that they do not have to be reprogrammed after power is completely interrupted for a longer period of time. Many ovens and other high demand loads include switching power supplies to power their clocks, timers, control circuits and the like with these supplies being capable of operating with reduced voltages. Alternatively the clocks, timers and the like may be provided power via a continuously connected circuit, or may incorporate backup power such as battery operation.

Load monitor **23***b* is preferred to be included in load limit circuit **43** but may, as well as **35**, be omitted if their capabilities are not desired for operation of load control **25***a*. Load monitor **23***b* is similar to **23***a* except for possible changes to match it to the current controlled and different maximum load. **23***b* monitors the electric power supplied to

load **16** and communicates via interface **35** and communication channel **36** with load control **25***a*. This monitor may be utilized to send load power (e.g. current) information to load control **25***a* for several purposes. For example full power oven load characteristics such as initial heating current and current to maintain temperature when heated to provide current vs. time parameters as previously discussed will allow load control to predict future load. Also **23***b* may be used to enable load control **25***a* to determine that the current actually being used has dropped below the value the current is set to by current controlled **44**. This will allow load control **25***a* to further adjust current to thus guarantee a lower maximum load without adversely affecting oven performance. It is also desirable that communications link **26***a* and/or **36** operate bidirectionally to provide information to load control **25***a* thus allowing verification and monitoring of the operation of load limit **43**.

The oven load information may be used by load control **25***a* to detect when the oven heating element has just been turned off by the oven thermostat (and thus expected not to turn on again for several seconds or longer). This will allow load control **25***a* to use the resulting extra generator capacity for other purposes, for example to provide additional starting current such to as an air conditioner compressor. As a safety precaution load control **25***a* may also lower the current supply to the oven to a very low value for a short time. This lowering will not impair oven operation while guarding against an unintentional overload of generator **13** in the event the oven thermostat unexpectedly closes due to an unforeseen event such as an opened door. Oven load information may be used to cycle another load out of phase with the oven heating element, that is to only turn on or increase another load such as a battery charger for a time period after the oven heating element is turned off. Alternatively the other load can be turned on or increased when the oven heating element is turned off and turned off or decreased immediately after the oven heating element is turned on, the momentary overlap of the two being handled by the short term higher current capability of the generator. These operations will generally be possible with any type of load which cycles on and off.

It will be recognized from the teachings herein that the operation of load limit **43** may be partially or completely incorporated within a particular load as desired. For example the current control **44** and/or load monitor **23***b* may be incorporated within the oven **16**. Alternatively other loads which are capable of being limited, for example the battery charger for an electric or hybrid vehicle or the like discussed above, may be connected in a fashion to provide current limit and/or load monitoring interconnection to load control **25***a* as desired. If the load has internal control of its current available, for example such as the battery charger for an electric or hybrid vehicle or the like, it may be connected to load control **25***a* without an additional current limit circuit. As with the additional current control **44**, load control **25***a* may cause the load to be controlled in discrete levels or may cause the load to be controlled in essentially continuous fashion. As with the separate current control circuit, for loads which have internal clocks, timers or the like which require some small amount of current to operate it is desirable not to completely disconnect them from the power source for long times which will cause these circuits to need to be reset, or alternate continuous circuit power or backup capability can be provided.

Control of individual loads to limit the power supplied to them or power consumed by them (one controls the other) under control of load control **25***a* is desired, particularly during times when the power grid is in heavy use and during times when generator **13** is supplying power. For example heavy current loads like ovens and chargers may still be operated at reduced current in order to prevent overload of the power source, as compared to their being entirely disconnected. An oven for example will take longer from initial turn on to heat to its thermostatically controlled temperature, but once at that temperature the thermostat will be able to control the temperature, assuming a reasonable amount of current less than the maximum is still available to the heating element. In a situation where a power failure occurs after oven use is started, limiting the current to the oven may allow the oven to be powered from the generator, thus allowing the cooking to be completed, as compared to an oven which is not so limited and thus can not be connected to the generator because it will cause an overload.

FIG. **6** also shows load switch **22***b* including a switch **34** to connect and disconnect load **17**, an electric clothes dryer, to/from the power source selected by the transfer switch **15**. Load switch **22***b* communicates with load control **25***a* via communication links **26***b*. Interface **29***j* couples the communication link **26***a* to switch **34** to allow the load control to operate switch **34**. Load **17** may optionally communicate with load control **25***a* via communications link **40***b*. The switch may be operated in a normally closed or a normally open configuration or a latching condition as known to one of ordinary skill, however it is preferred that load control **25***a* simulate any of those switch types for a given switch. It is also desirable that communications link **26***b* operate bidirectionally to provide information to load control **25***a* thus allowing verification and monitoring of the operation of load switch **22***b*.

FIG. **6** further shows load switch **22***c* which includes a switch **34** to connect and disconnect load **18**, an electric air conditioner, to/from the power source selected by the transfer switch **15**. Load switch **22***c* communicates with load control **25***a* via communication links **26***c*. Interface **29***k* and switch logic circuit **37** couple the communication link **26***c* to switch **34** to allow the load control **25***a* to operate switch **34** via logic circuit **37**. Logic circuit **37** is preferred to be configurable by communications from load control **25***a* to cause it to operate in response to power from the transfer switch as a normally open, normally closed, latching or special function switch. It is preferred that **37** normally be configured by load control **25***a* to operate the switch to open when power to the switch from the transfer switch is lost and to stay open until a command to close is received and thereafter as a latching switch (until power from the transfer switch is lost again). In this fashion the load is automatically removed from the transfer switch when power is lost, thus eliminating the need to have it disconnected by the load control. It is further preferred that **37** include a time delay function to prevent power from being applied to the air conditioner for a time period after it has been removed in order that the compressor head pressure can bleed off thus avoiding the possibility of excessive compressor starting currents. It is also desirable that communications link **26***c* operate bidirectionally to provide information to load control **25***a* thus allowing verification and monitoring of the operation of load switch **22***c*.

FIG. **6** still further shows a combination user input and user feedback module **39** which communicates with load **16** via communications link **38** and communicates with load control **25***a* via communications link **40**. As previously discussed **39** may be incorporated into or supplied by processor circuit **33**. While shown as a combination input and feedback module, the two operations may be separated

into different devices using common or different communications. In the present example, a user desiring to operate the oven may be alerted that insufficient power capability exists for such operation, thereby allowing further user interaction with load control **25***a*.

While the load switches **22**, load limit **43**, controllable loads e.g. **16**, **17** and **48** are most commonly described herein as being preferred to be separate from the load control **25**, one of ordinary skill will recognize that the invention may very well be practiced with load control circuitry, especially that circuitry corresponding to controlling a particular switch, limit and/or load, being incorporated within or specific to a particular switch, limit and/or load, or small number thereof, which will be referred to herein as load specific control circuitry. In this respect the communications which sense overloads and other load related parameters and user inputs e.g. generator monitor **24** and environmental, user & miscellaneous devices **21**, as well as particular user interfaces, may be contained within the load or load controlling device, and/or communicate directly with load specific control circuitry.

In particular, in low cost systems, the aforementioned use of power frequency may be utilized directly within a load or load control device to sense an overload and disconnect the load. One of skill in the art will recognize that it will be useful to establish priorities for each such device which priorities may be established by incorporating circuitry to determine the degree or level of overload, various time delay operations or combinations thereof in one or more of load switches **22**, load limit **43**, controllable loads e.g. **16**, **17** and **48** such that some loads are shed or prevented from connecting more readily than others. For example the power frequency detector may be set to detect degrees or levels of frequency change, with some loads being disconnected, transferred, limited or prevented from being connected to a particular source at a small frequency change and others being disconnected, limited or prevented from being connected with larger frequency changes or combinations thereof being utilized with a particular load. As described herein, particular loads may be switched from one power source to another to facilitate a desired optimization or operation of the system.

As one example a low priority load may be prevented from being connected if the power frequency makes more than normal excursions, if even momentary, below a given frequency threshold. Such excursions would have a high probability of indicating the generator is close to an overload and is momentarily overloaded by small and/or short term load increases for example such as the starting current of a small motor in a kitchen appliance such as a refrigerator. When a larger or longer term power frequency deviation is detected a delay may be incorporated in one or more of load switches **22**, load limit **43**, controllable loads e.g. **16**, **17** and **48**, with lower priority loads being disconnected faster than higher priority loads. In this example a low priority load such as an air conditioner may be quickly disconnected which could very well eliminate the overload and return the power frequency to normal and thus eliminate the need to disconnect more loads.

A load circuit may be part of or otherwise incorporated to control one or a small number of loads, load switches, transfers and/or load limits in order to sense power frequency to determine the probability of nearing an overload, being in a small overload, a moderate overload or large overload with this information being utilized to control limiting the current supplied to one or more load, disconnecting or transferring one or more load and/or preventing the connection of one or more load. In addition other features of the invention described herein may be incorporated, such as preventing the reconnection of a load for a time period after it normally turns off or is disconnected. It will be understood that the individual features, e.g. those of **22***b*, **22***c*, **43** and **39** described with respect to the Figures may be rearranged to operate with a particular load, set of loads or sets of loads as desired to provide a particular combination of inventive features for a particular system as will be known to the person of ordinary skill from the teachings herein.

With systems where load specific control circuitry is utilized to control the connection of one or a small number of loads in response to the power frequency, it is desirable to know the loading vs. frequency of the power source or sources. In particular the characteristics of the frequency versus load are preferred to be programmed into the microprocessor either at manufacturer or by the user during installation in order that the microprocessor may know if the load being supplied by the generator is below, near, slightly overloaded, significantly overloaded or highly overloaded. In this respect it is also useful to control the frequency of the A.C. power provided by the power source in response to the load on the power source in order that the frequency may be more accurately utilized by the load specific control circuitry to prevent or remove overloads. This frequency control may be accomplished by sensing the load on the source and controlling the power frequency by feedback to the frequency control, e.g. the rotational speed of a genset or frequency reference of an A.C. inverter.

FIG. **7** shows an example of a mechanical layout of the combination user input and user feedback module **39**, including a display **41** for displaying messages from load control **25***a* to the user and switches **42***a*-**42***c* to allow the user to (among other capabilities) provide commands to the load control **25***a*. User commands and messages are conveyed to and from the load control **25***a* via communications link **40***a*, and to and from load **16** via communications link **38**. Load **16** and load control **25***a* may also communicate with each other via **39** (and communications links **38** and **40***a*). For example if the user wants to turn on the oven it can instruct the load control to provide power for the oven to be operated in a particular mode such as full power or at some level of reduced power as described herein. The load control **25***a* can offer a set of options to the user including options to chose the level of operation of the desired load and corresponding decreases in the level of, or termination of, operation of other loads. In this fashion the user may communicate with the load control in order to change priorities to enable the user to obtain power for the desired device. It will be understood that one or more user input and/or user feedback modules may be provided with any of the loads in order to allow the user to communicate with the load control in order to enable the user to operate a desired device, or to allow communications with the load control in order for the user to operate multiple devices. The feedback and input capabilities may be combined if desired, for example by use of a touch screen as is well known in the art.

For example, a user desiring to use the oven to bake for 45 minutes at 400 degrees can enter that information to load control **25***a* via **39** and keys **42**. The load control will then determine options available to allow oven operation and provide them to the user. The user then selects one or more (or none) of the options and the load control puts the user's desired operation into effect. For example the load control might offer the user the following options: a) operate the oven at full power by turning off an air conditioner; b)

operate the oven at full power by turning off a vehicle battery charger; c) operate the oven at 75% power by reducing the battery charger current by 50% with an increase of 7 minutes to preheat the oven to 400 degrees; d) operate the oven at 65% power by turning off a hot water heater, with an increase of 10 minutes to preheat the oven; e) select option d) and in addition reduce the battery charger power by 75% and operate the water heater only while the oven heating element is turned off by the oven thermostat. It will be understood from the above example that there are numerous capabilities and options which may be determined by the load control **25***a* and presented to a user to assist the user to achieve a desired operation. This assistance may be provided in several manners with menu selection, interactive querying and graphical user interface being just a few.

Accordingly it will be understood that the system of FIG. **4** as implemented with the various features of FIGS. **6** and **7** will be capable of operation to power ones, which will be understood to include some or all, of a group of loads. The group of loads may include loads which may be individually switched on and off, loads for which the power supplied to the load is limited to a known maximum amount, loads which may be controlled to limit the amount of power they take from the power source and loads which are not controlled. It is noted that practice of the invention will virtually always include loads which are not controlled, which for example will most probably include the generator and transfer switch controller **14** as well as the power supply for the load control **25**, lighting and electrical outlets for consumer electronic devices. It will be understood that the invention may be practiced as needed in a particular system with only one load comprising any one or more particular type of loads and/or without any combination of the above described types of loads.

FIG. **8**, similar to FIG. **4** shows a simplified diagram of another embodiment of the invention which includes operation with a third power source **50** which by way of example is shown as a solar panel and controllable load(s) **48**. Elements **12**, **13**, **16**, **17**, **18**, **19**, **21**, **22***b*, **22***c*, **23***a*, **26***a*, **26***b*, **26***c*, **27***a*, **27***b*, **28***a*, **28***b* and **28***c* are shown, the same as in FIG. **4** except that **21**, **27***a* and **28***c* are changed from optional in this embodiment. Load limit **43** is the same as described in respect to FIG. **6**. FIG. **8** further includes load control **25***b* similar to **25***a* of FIG. **4** but having increased capabilities including controlling the generator and transfer switch instead of **14**, as will be described below by way of example. FIG. **8** also includes transfer switch **47**, similar to switch **15** except that it is an on-off-on type switch (as compared to break before make on-on type for prior art switch **15**) which can connect its output to either power grid **12**, or generator **13** or neither, thus leaving only the third power source (solar panel) **50** to power the loads. Transfer switch **47** is controlled by load control **25***b* via communications link **45** (shown at the top of the transfer switch and bottom of the load control) and controllable load(s) **48** communicating with load control **25***b* via load control communications link **46**. One of ordinary skill will understand that in order to simplify the description of the invention FIG. **8** does not show many elements, e.g. circuit breakers, safety features and the like that are required of an actual system and as with transfer switch **15**, one of ordinary skill will know that transfer switch **47** will be much more complex in practice and is shown herein in simplified form for purposes of explanation.

One of ordinary skill will know from the present teachings, to practice the invention utilizing the on-off-on type of transfer switch **47**. As with FIG. **4**, the embodiment of FIG. **8** may be utilized to prevent overload of any combination of the power grid service **12**, generator **13** and third power source **50**. It will also be understood that third power source **50** may be operated while the power grid is connected in order to reduce the power supplied by the power grid, or even to sell power back to the power utility, however it will be recognized that in such paralleled systems when the power grid fails it is important to disconnect the power grid from the generator in order to prevent damage to the generator or possible harm to workers who are repairing the grid failure. Additionally, when the generator is connected by transfer switch **47** to power the loads it is likewise important not to transfer substantial (i.e. damaging) amounts of power from the third power source to the generator to prevent damage to the generator. Because of this it is important to monitor the generator current output or otherwise to connect an additional load or disconnect the generator when the third power source **50** can provide enough current to power the loads.

Communications link **27***a* is utilized for communications between generator **13** and load control **25***b* via power source monitor **49** in order that load control **25***b* may start and stop the generator in response to power grid failure (sensing link to power grid is not shown) or as otherwise needed. Note that communications link **27***a* may connect directly from generator **13** to load control **25***b* as previously described. One of ordinary skill will understand from the present teachings that the third power source, solar panel **50** is representative of one or more additional individual power sources which may be utilized with the invention. A solar panel which is made up of individual photovoltaic cells that convert sunlight to electricity is chosen in FIG. **8** by way of example with the teachings of the inventive concepts being applicable to individual and combinations of other types and numbers of power sources, e.g. stored energy, wind, water and geothermal types of power sources in addition to solar. As with communications link **27***a*, the solar panel communications link **27***c* may be connected directly to load control **25***b* if desired. When solar panel **50** and generator **13** are connected directly to load control **25***b* power source monitor **49**, load monitors **23***a* and **23***c* and their associated communications links may become redundant and may be eliminated with respect to monitoring the generator and solar panel respectively.

Solar panel **50** has a power output via connection **51** which is connected with the output of transfer switch **47** to provide power to the loads as is well known in the art, e.g. it is synchronized to and paralleled with the power from transfer switch **47**. The power output from the solar panel is measured via load monitor **23***c* and communicated to power source monitor **49** via communications link **27***d*. Load monitor **23***c* is similar to **23***a* except for possible changes to match it to the maximum output power of the solar panel. Power source monitor **49** functions in a manner similar to generator monitor **24**, receiving generator and power grid load information from **23***a* via communications link **27***b* and optionally communicating via communications link **27***a*. As explained with respect to FIG. **4**, load monitor **23***a* may also monitor power supplied by the grid.

Additionally power source monitor **49** receives solar panel power output information via **23***c* and communications link **27***d* and optionally communicates with solar panel **50** via communications link **27***c*. The power source monitor **49** communicates with load control **25***b* via communication link **28***a* and optionally **28***b* as previously described in respect to FIGS. **4** and **5** but additionally includes information and communications with respect to solar panel **50**. As

will be known to one of ordinary skill from the teachings herein, the power source monitor and load control may be expanded or duplicated to handle more power sources than the generator **13** and solar panel **50**. Connection of those extra power sources to the system may be via extra transfer switch circuits as with generator **13**, or via paralleling as with solar panel **50**, and will be accommodated by load control **25***b* for control of the loads being powered. As previously explained with respect to generator **13**, if the power source(s) provide information about their operating parameters from their own control and/or monitoring systems that information may be communicated directly to load control **25***b* and power source monitor **49** along with its sensors and communications link may be eliminated with respect to those power sources.

The operation of the embodiment of FIG. **8** is similar to that of FIG. **4**, however additional capabilities of powering loads **16-19** and **48** from the solar panel **50** are provided as well as interacting with and controlling load(s) **48** directly by load control **25***b* to set its maximum load presented to the power source(s). For example a controllable load **48** may be a Lasko Model 5350 room heater which can be remotely switched from off to 900 watts to 1500 watts via wireless communications link via load control **25***b*. Solar panel **50** is connected to the output of the transfer switch **47** to provide additional power to the loads when environmental conditions permit, thereby reducing the amount of power required from the other power source(s). In particular, during periods of low load demand when power is available from **50** the load control **25***b* is preferred to communicate via **45** to cause transfer switch **47** to switch to its off position in order to power those of the loads **16-19** and **48** which are consuming power to receive that power from **50**.

Controllable load(s) **48**, such as the aforementioned room heater may be powered by solar panel **50** and controlled to either heat at 1500 watts if there is enough power available and heating is desired because of a cold room or outdoor temperature (sensed by sensors **21**), or may be reduced to 900 watts if a higher priority load needs power or the solar panel **50** is incapable of providing power for the high setting, or may be switched off if the room temperature is high enough or solar panel **50** can not provide 900 watts. It will be recognized in this example that when the room temperature reaches the thermostat temperature of the heater **48** (which may be set by load control **25***b* or directly on the heater by a user), the heater will turn off its heating element thereby drawing minimal power. Load control **25***b* may nevertheless turn off the heater to avoid a sudden overload of the solar panel **50** should the room temperature cool to the point where the heater's thermostat turns the heating element on again.

Accordingly to the present example, low cost power is selected by load control **25***b* to power the loads while at the same time the load control will communicate to various components of the system to monitor (e.g. via load monitor **23***c*) and control power supplied to several loads each of differing types including high priority loads such as lights **19**, switchable loads such as by load switch **22***b* to clothes dryer **17**, limitable loads such as via load limit **43** to oven **16** and controllable loads such as the heater **48** to allow loads of various priorities to be powered by the low cost power source while at the same time preventing overload of that source. Load control **25***b* will monitor and control power demands by the various loads so as to not exceed the available power from a given power source or set of power sources. If demand increased beyond what a power source such as the solar panel **50** is capable of providing, the load control will decide to either not connect the additional load(s), or to connect but control power supplied to the additional load(s), or to connect additional power source(s) such as grid power **12**, or start and connect the generator **13**, or other power sources (not shown) thus providing additional power for the additional loads. The decision making by load control **25***b* is preferred to be based on one or more of user input, load priorities, load parameters, power source parameters, power cost and environmental parameters in order to prevent overload of the power source(s) powering the loads.

In particular, the decision to connect to additional power sources is preferred to be made according to the priority of the load(s) to be connected, availability and cost of the power from the various power sources which are available to provide additional power, or according to other decision making criteria which is provided to the load control during manufacture, installation or afterward by an operator, either by the operator's changing and storing priorities or by the operator's instant override of stored priorities. It will be understood that more than the three power sources may be accommodated. There may be one or more wind turbines, solar panels, fuel cell, generators and the like provided in the system in addition to the grid power as one of ordinary skill will find desirable to fit a particular application. In systems requiring high reliability there may also be multiple connections to the power grid, the multiple connections being provided by different grid service paths, or even to multiple power grids provided by different utilities. Such multiple connections are known in the art to be used in broadcasting and medical facilities. Of course as previously described there may also be many loads of different types to be controlled by load control **25***b* using the devices, capabilities and features described herein.

A controllable load **48** may be of any type where control of the power consumed by the load is provided within the load, e.g. those described in respect to FIG. **6** or those which include any of the various circuits described with respect to current control **44** of FIG. **6**, and those which are otherwise controllable without requiring a separate load limit **43** or load switch **22***b* or **22***c* as previously discussed. A three way light bulb is such a controllable load. Other such controllable loads include the above mentioned low and high power oven and clothes dryer and the Tesla Motors vehicle High Power Connector and battery charger. Controllable load **48** communicates with load control **25***b* via communications link **46** to provide load control communications, which may be single direction or bidirectional as desired.

FIG. **9** shows a diagram of load control **25***b*, similar to FIG. **5** with the same elements **26***a*-**26**N, **28***a*, **28***b*, **29***a*-**29***h*, **30**, **31** and **32**. In addition, load control **25***b* has additional interface circuits **29***i* and **29***j* and communications links **45** and **46** to provide communications with transfer switch **47** and controllable load(s) **48** respectively. One of ordinary skill will understand that processor circuit **33***b* of **25***b* is preferred to have additional capabilities as compared to processor circuit **33***a* of FIG. **5** in order to accommodate the additional capabilities such as may be needed in relation to solar panel **50**, transfer switch **47** and controllable load(s) **48**. Implementation of such additional capabilities will be within the ability of one of ordinary skill from the teachings herein.

It is preferred that the operation of the embodiment of FIGS. **8** and **9** be such that power is provided to each individual load at times and in amounts, and from one or more of a plurality of available sources as are desirable to minimize cost and maximize reliability for a given set of

circumstances, as controlled by load control **25***b*. It is further preferred that the operation of load control **25***b* be performed at least in part by taking into account established priorities for one or more individual loads, established parameters for one or more loads, established parameters for one or more power sources and monitoring parameters for one or more power sources and one or more loads. It is further preferred that the operation of load control **25***b* be performed to allow input from one or more user in order to allow changing of priorities of loads and changing of the operation of one or more load so as to change at least that load's current in operation.

FIG. **10** shows a simplified diagram of the embodiment of FIG. **8** which includes additional capabilities for management of loads presented to a power source wherein the power source provides power in one or more form, and the loads consume power in more than one form, e.g. electric and heat. FIG. **10** includes elements **12**, **13**, **16**, **17**, **18**, **19**, **22***b*, **22***c*, **25***b*, **26***a*, **26***b*, **26***c*, **27***a*, **43**, **45**, and **47** as in FIG. **8**. Other elements of FIG. **8** are omitted from FIG. **10** for simplicity. Additional elements are included in FIG. **10** for the purpose of recovering power in the form of heat from generator **13** as controlled by load control **25***b*. The elements of FIG. **8** which are not shown in FIG. **10** will be known to be available for inclusion in FIG. **10** as desired. Generator **13** is assumed for the teachings herein given by way of example and in particular with respect to the instant explanation of heat transfer with respect to FIG. **10**, as being of a type such as a fuel cell, internal combustion engine, battery or battery array, or the like having significant heat generation as a byproduct of its operation. Generator **13** will further be assumed to have a liquid or gaseous coolant system which may utilize glycol, water, steam or any other coolant suitable for use with generator **13**, along with a radiator or other heat exchanger for removing such heat thereby cooling the generator. As used herein the coolant will be referred to as a fluid, even though it may be in a gaseous or mixed state form. In the system of FIG. **10**, the coolant is supplied from the generator's cooling system via piping (piping shown by heavier lines) **58** to electrically controlled valves **54** and **55** to heat exchangers **52** and **53** where the coolant loses heat to the fluid on the other side of the heat exchangers. The cooler fluid (which may change phase from gaseous to liquid due to cooling in the heat exchanger), is then returned to the generator via piping **59** (and change phase from liquid to gaseous in the generator). Circulation of the coolant may be provided by the cooling pump in generator **13**, or externally by an additional pump or pumps (not shown). In this manner the excess heat from **13** will be removed and utilized to heat other needed devices and/or systems. As noted FIG. **10** is a simplified diagram and one of skill will know there are several operation details and considerations which will be pertinent to the proper operation of the generator, load control and heat exchangers in a particular system. For example it is desirable that additional flow control, mixing and safety valves, temperature and pressure sensors and/or pumps are included in the systems. These are not shown but nevertheless necessary as will be known the one of ordinary skill.

Heat exchanger **52** operates to transfer heat in the coolant from **13** to heat cold water **61** from a supply such as a well or municipal water utility to be used as domestic hot water **60**. Heat exchanger **52** is preferred to be a double wall construction type to prevent leakage of coolant into domestic hot water. The domestic hot water may be heated to proper temperature, usually around 125° F. directly by heat exchanger **52** or may be only partially heated to its desired temperature with heating to the desired temperature accomplished by another heating stage (not shown) as is well known in the hot water heating industry. Similarly, heat exchanger **53** operates to heat returning glycol or other fluid **63** used in a radiant heating system to the proper temperature, usually around 150° F. to provide a supply of radiant heat fluid **62** or only partially with heat to the desired temperature accomplished by another heating stage (not shown) as is well known in the hydronic heating industry. Temperature sensors (e.g. RTD and other resistive sensors, thermocouple, silicon junction, silicon bandgap, thermostats or aquastats) inside the heat exchangers **52** and **53** sense the temperature of the domestic hot water supply and radiant heat supply respectively and convey those temperatures to load control **25***b* via domestic heat sense link **64** and radiant heat sense link **65** respectively as known in the respective industries. Load control **25***b* operates to adjust the opening of one or both of valves **54** and **55** to maintain radiant heat supply and/or domestic hot water supply at or near a desired and preferably constant temperature. Valve opening may be controlled such that the valve is either fully open or closed with heating controlled by the time of opening, or partially opened with heating controlled by the amount of opening, or a combination of the two.

FIG. **10** elements **52**-**65** will be understood to be common and ordinary components of hydronic and hot water heating systems as are known to the person of ordinary skill. In some systems it may be desired that temperature sensors be omitted (but not relief valves) where the heat exchanger **52** or **53** can only partially heat to desired temperature and another heating stage is used. It is desired that both the domestic hot water system and radiant heat system include additional heating stages to ensure both systems operate when generator **13** is not running. When generator **13** is running and at operating temperature, if the domestic hot water temperature and/or radiant heat temperature as sensed via **64** and **65** respectively is below the desired temperature load control **25***b* causes opening of the corresponding valve. Generator temperature will be made available to the load control via communications link **27***a*. It is desired that the radiant heat system be controlled so that when generator **13** is not running the radiant heat fluid is not circulated through heat exchanger **53** which might lead to some inefficiencies due to heat loss in **53**. Other arrangements of the system and its components will be possible from the teachings herein.

As another example, one or more battery pack(s) in an energy storage system such as that utilized in an electric or hybrid vehicle, or wind turbine, and in particular a battery pack stored in an unheated location, may be heated by connection to radiant supply **62** or by a separate heat exchanger in order to prevent excessive cooling and/or to maintain the temperature of the batteries at or near optimum temperature for the type and intended use of the battery. In addition, during charging the excess heat from the battery may be removed by the same system and used to heat other devices or systems, for example such as the radiant heat supply or domestic hot water. The integration and operation of such additional heating and cooling connections and control thereof by the load control **25***b* will be within the skill of one of ordinary skill from the teachings herein.

Also, it will be desirable to regulate the cooling of the generator **13**, which is provided by its own radiator, in order that sufficient heat is available to the heat exchangers when needed, and when heat is not needed by the heat exchangers the generator radiator dissipates sufficient heat to keep the generator properly cooled. This heat management may be had by proper choice of the generator's cooling thermostat

temperature, somewhat above the highest output temperature of the heat exchangers. In the above example if the generator's thermostat is chosen to be 160° F. it will open and cool the generator independent of the heat exchangers if sufficient heat is not drawn away from the generator by the heat exchangers. The proper handling of these operation details and considerations will be apparent to one of ordinary skill from the present teachings.

It may be desirable that the system of FIG. **10** be used with a fuel cell which has its electrical output connected to the output of the transfer switch in the same fashion as the solar panel **50** of FIG. **8**. This will provide more continuous heat for use by the heat exchangers **52** and **53**. Alternatively, because most fuel cells include one or more internal heat exchanger that heat exchanger may be used to heat the domestic hot water and/or the radiant heat. As with the generator example above provisions must be made to ensure proper cooling of the fuel cell in the event sufficient heat is not drawn away by the heat exchanger. The proper handling of operation details and considerations will be apparent to one of ordinary skill from the present teachings.

The coupling of a second form of energy (heat) from generators and other power sources such as fuel cells for use in the heating of domestic hot water and radiant heat supply is given by way of example and one of ordinary skill will recognize from the present teachings that other forms of energy may be produced, recovered, transmitted, stored and/or utilized to power devices or systems for which it is desirable to utilize that energy. Such systems may utilize the teachings and features of the preferred embodiment of the present invention to benefit from improved management of energy therein as will be known to one of ordinary skill. For example, some vehicles are known to utilize stored compressed air for power and energy may be managed in a gaseous form utilizing the inventive concepts disclosed herein.

FIG. **11** shows a simplified diagram of a load which may also be utilized as a power source which the present invention may be used with. In this example the load is shown as a battery (or battery array) which may be charged to store power. Such batteries may be part of a green power system such as a solar panel, wind or water turbine and may be permanently located or otherwise such as installed in an electric or hybrid vehicle, described in more detail with respect to FIG. **12**. Other forms of energy storage may be utilized in place of the battery, as long as suitable interface devices to store and recover stored energy are used as will be known to one of ordinary skill from the teachings herein. For example energy storage forms using compressed air in a container, heat in a vessel, fluid pumped to an elevated reservoir, mechanical such as a flywheel or spring, and many other suitable forms may be resorted to by the person of ordinary skill.

In FIG. **11** a connection **71***a* from the transfer switch (preferred to be made via a circuit breaker which is not shown), for example a high current 240 volt connection such as discussed herein with respect to a vehicle battery charger, is made to the input of battery charger **66** and output of DC to AC inverter **67**. The output of the battery charger **66** is connected to the battery **68** and the battery **68** is also connected to the input of DC to AC inverter **67** which when it operates is preferred to synchronize with and parallels power (if any) available at the transfer switch output. U.S. Pat. No. 7,338,364 describes this type of power inverter. It is possible that both charger **66** and inverter **67** will be in close proximity to the battery **68** in order to minimize wiring costs and it is possible that both charger **66** and inverter **67** will be combined into one instrument. Both charger **66** and inverter **67** are connected to load control **25** (not shown) via communications links **69** and **70**. The communications may be combined in one communications link if desired. In this fashion power from the transfer switch may be utilized to charge the battery or the battery may be used to power the inverter **67** to provide AC power to the other loads or to the power grid, all under control of load control **25**. In particular the battery array of an electric or hybrid vehicle may be utilized in order to provide backup power to one or more loads in the event of a failure of the power grid.

Recalling that many homes only have a 100 amp service from the grid it normally would be unwise to use a 90 amp connection from the transfer switch to the battery charger due to the risk of overloading the service connection. When, as in this example, the charger can be controlled by the load control to keep its maximum load to the service at a much lower level, for example 20 amps, or to otherwise prevent overload of the service connection, a larger capacity connection may be utilized as will be understood from these teachings. The load control may at any time monitor the charge of the battery **68** via the charger **66** and communications link **69**. If the battery has a sufficient charge and the load control needs to have additional power available, such as during a grid outage or during a high load conditions, the load control may turn off the battery charger **66** and turn on the DC to AC inverter **67**, thereby taking power from the battery to be used elsewhere.

In this example, having the 90 amp connection to the battery inverter **67** will allow a significant amount of power to be supplied, almost enough to replace the entire 100 amp service in the event of a grid power failure. Of course the power taken from the battery may be utilized for other applications as previously discussed, including supplementing grid power during heavy loads or expensive power rates or even selling power back to the utility. One will recognize that it is also possible to charge the battery with cheap power from another source such as solar panel **50** or at a time of availability of cheap power from the grid **12** such as at night. That cheap power which is stored in the battery may then be used when power from the grid (or other sources) is more expensive, or may even be sold at a profit. Control of charging and discharging of the battery **68** by load control **25** may also take into account the timing and need of power for other uses as well, such as driving the vehicle which the battery is installed in.

FIG. **12** shows a diagram of an embodiment of the invention which is used with an energy storage battery **68**, optional communications link **73** and charging generator **72**. Battery **68** and DC to AC inverter **67** are configured as a backup power supply to be used in the event of a power grid failure. Power grid **12**, loads **16-19** and **48**, load control **25***b*, load switches **22***b* and **22***c*, load limit **43**, communications links **26***a*-**26***c*, **45** and **46** and transfer switch **47** are described above as in FIG. **8**. Battery **66**, DC-AC inverter **67**, battery **68**, communications links **69** and **70** operate as described above in respect to FIG. **11**, except that the battery charger **66** is connected to the output of the transfer switch via **71***c* whereas the output of DC to AC inverter **67** is connected to an input of the transfer switch **47** instead of to the output of the transfer switch as in FIG. **11**. If it is desired to provide power from **67** to the power grid, synchronization with and parallel operation may be obtained with the connection moved to the output of the transfer switch. It will be recognized that it will be necessary to disconnect the power grid in the event it fails.

The embodiment of FIG. **12** will find use as a home backup system and in particular where the battery (or battery array) **68** is contained within an electric vehicle which is charged by battery charger **66** or a hybrid vehicle which may be charged by battery charger **66** or by a generator **72**. It will be known that generator **72** may be of any type suitable for use with the battery **68**, or with a vehicle which contains the battery, for example an internal combustion engine or more preferably a fuel cell. It will be understood that when the battery **68** is part of a vehicle that battery charger **66** detect and convey to load control **25***b* when it is connected to the battery and similarly DC to AC inverter **67** communicate to load control **25***b* when it is connected to the battery. Of course when the two are configured to be connected simultaneously, e.g. by a single connector, either charger **66** or inverter **67** may convey the communications via a single connection. When the vehicle includes an on board generator operable to charge the battery, load control **25***b* may communicate with generator **72** as desired via **73**, it being preferred that **73** be wireless, or included in the communications link **69** or **70**. DC to AC Inverter **67** may also be located in the vehicle. When the vehicle includes an operating system to manage those of **66**, **67**, **68** and/or **72** which are located in the vehicle, communications between those element and load control **25***b* may be handled via a communications link with that operating system.

Battery charger **66** will be turned off by load control **25***b* whenever inverter **67** is selected by transfer switch **47**. Generator **72** is preferred to be utilized to charge battery **68** whenever the battery is being used as an energy source for backup power and the battery becomes discharged from that operation or is already in a discharged state when needed for backup power. It is preferred that load control **25***b* operate to determine the level of charge of battery **68** at or below which it is desirable to start the generator **72** to charge the battery in order to maintain or extend the amount of energy which is available to power DC to AC inverter **67** to be utilized as backup power in the event of failure of the power grid **12**. It is additionally preferred that in normal operation battery charger **66**, under control of load control **25***b*, operate to charge battery **68** with low cost power, for example during night hours or from a low cost power source such as solar, wind or water power as previously discussed. Thus battery **68** may be kept at or near a fully charged state using low cost energy and used to power inverter **67** during power outages. Although the battery **68** and related elements of FIGS. **11** and **12** are not shown in FIGS. **4-10** the teachings related thereto generally may be incorporated with respect to any of FIGS. **4-10**. FIG. **11** does not show a battery charger other than **66**, however it will be understood that the teachings of FIG. **12** and in particular with respect to generator **72** will also be applicable to the system of FIG. **11**.

If battery **68** is discharged to a predetermined level due to extended use for backup power or lack of initial charge, generator **72** may be started by load control **25***b* (or otherwise by the vehicle's own operating system) to recharge the battery. Load control **25***b* is preferred to manage loads in order to minimize the discharge of battery **68** while maintaining a user preferred level of power to various loads, either during normal backup operation or during charging by generator **72** or both. As an additional consideration, while generator **72** is preferred to be a fuel cell with no dangerous or annoying emissions, if generator **72** is an internal combustion engine or similar generating device which emits dangerous or annoying emissions it is preferred that the facility such as a garage in which it is housed (if any) include provisions for suitable ventilation and other protection against such emissions. Such protection is desired to be controlled by or otherwise monitored by load control **25***b* in order to ensure safe operation of generator **72**. In an example of such protection, a garage will be fitted with an exhaust fan and monitor for potentially dangerous emissions (e.g. a carbon monoxide monitor) which fan is started when or near the time which the generator is started with the fan not being shut off by load control **25***b* until after generator **72** is stopped and carbon monoxide levels (and any other potentially dangerous emissions) are verified via the monitor(s) to be at or below safe levels. The exhaust fan is preferred to be otherwise controlled by load control **25***b* to run whenever the level of any emission is above safe levels.

FIG. **13** shows a simplified diagram of a combination of load coupler **80** configured with a load **18** shown as a typical air conditioner and communicating with load control via link **26***c* in order to control the coupling of power from the transfer switch to the load as taught above and as will be explained further in respect to FIGS. **14** and **15**. Control link **26***c* may be of any type previously described but will be shown by way of example in FIGS. **14** and **15** below as a wireless link. As described herein the power and loads may take on various forms however for purposes of explaining the invention description will be given by way of single or multiple phase electrical power in commercial voltage and currents available to homes powering loads which are relatively heavy as compared to the utility service, for example electric air conditioners. Accordingly, **80** may also be configured as a load limit **43** if desired to provide control of suitable loads as discussed herein.

FIG. **14** shows a detailed diagram of a commercially valuable embodiment of load coupler **80**. Power from the transfer switch is controllably coupled to the load **18**, shown in this example via controllable relay **34** which may be a latching or a simple type as desired. If desired, relay **34** may be replaced by or combined with a current control circuit **44** which communicates unidirectionally or bidirectionally with microprocessor **37** to control or limit current to the load as an implementation of load limit **43** previously discussed. It is preferred that by using microprocessor **37** and user interface **77**, load coupler **80** may be manufactured as a standard device with each of multiple devices configured via the user interface **77** at the time of installation in a particular system to match the particular load being controlled.

Additionally the load coupler **80** may be designed such that optional features, for example such as the aforementioned current control, or different size latching or simple relays, may be installed after manufacture as desired. For example it will be desirable for the installer to have the ability to install a current control and/or relay of proper current rating to match the load. Once a unique name or other identifier is assigned to a particular coupler **80** via the user interface (or in manufacture), other configuration and test settings may be made via the user interface **77** or via a load control **25** or both. It is further desired that the installer have the capability to operate current control **44** and/or relay **34** and to operate, calibrate, test and/or check other functions such as battery charge, communications integrity and operation of sensing functions from either the user interface **77** or the load control **25** or both.

A latching relay which operates independent of external control from **37** to drop out and latch open when the voltage from the transfer switch rises above drops below known levels (setting a range of permissible voltage) is useful in protecting the load. This type of operation achieves high immunity from momentary disconnection due to over and under voltage conditions which frequently accompany

power loss situations. Utilizing a relay which automatically drops out and latches provides a degree of protection which is independent of the other control circuitry, e.g. the relay will drop out independent of the control circuitry but the aforementioned capabilities may also be provided via microprocessor circuit **37** if desired.

If utilized, the latching operation may be configured to latch open only, or latch open and closed. Additional protection including noise and spike filters, snubbers, limiters or absorbers such as transient voltage suppressors (e.g. TVS diodes) may be utilized (not shown) to protect the load from such unwanted occurrences as will be known to the person of ordinary skill in the art from the teachings herein. For example, when a simple relay is used momentary high voltage spikes may be passed to the load causing unwanted operation or damage and momentary disconnection of the load due to brown out or other low voltage conditions may cause unwanted operation or damage. For example a short disconnection during a brownout may cause an attempt to restart an air conditioner compressor with a high head pressure as previously discussed. By use of a latching relay operating to drop out and latch independent of control circuitry an extra degree of load protection is provided.

Because microprocessors are low voltage and low current devices a current driver and/or voltage translator must often be used to provide a higher voltage and/or current to energize the coil of relay **34** than the microprocessor alone can provide. Such current driver (or voltage translator) may be incorporated in the microprocessor circuit **37**, or the relay **34** or elsewhere. Accordingly the energizing the coil of relay **34** may be dependent on power from the transfer switch (which would directly or indirectly power the relay coil) thus allowing short voltage transients to cause the current to the relay **34** coil to lower to the point of allowing the relay to briefly disconnect the load. That brief disconnection can happen even though microprocessor circuit **37** maintains a constant command to the relay coil driver circuit intending to keep the load energized. In this example the use of a latching relay which will latch off in the event of a momentary dropout will avoid a relatively quick restart of the load and the resulting damage. Other types of relays and disconnect and connect operations may be utilized to prevent or reduce such problems if desired as will be known to the person of ordinary skill in the art from the teachings herein.

If a latching type relay or other circuit more complex than a standard relay is used, it is preferred that relay position circuit **79** be included in order that the microprocessor may know which position the relay or other circuit is in and in particular may know when the relay drops out. Such knowledge will be useful for example when voltage transients not timely sensed (or not sensed at all) by the microprocessor **37** occur. The relay position information will also be useful in the event the microprocessor is not programmed to store the relay setting when a change is made, or when the microprocessor is caused to reboot such as might happen in response to a monitoring routine, or as a failsafe to verify that the relay actually switches to the position commanded by the microprocessor.

The control of the relay is provided by the microprocessor **37** in response to various inputs and programming as described elsewhere herein. In particular a current monitor **23***d* provides a measure of current provided to the load to **37** and a voltage monitor **78** provides a measure of the transfer switch voltage to **37**. While the control of the coupling of power from the transfer switch to the load is shown in FIG. **14** by way of example as a relay, it may also be performed by other circuits as well, for example by way of current control, current limiting or otherwise as will be known to the person of ordinary skill from the teachings herein.

A battery & battery charger **74** provides backup power to the various elements of **80** as desired in order that they may continue to operate in the absence of power provided by the transfer switch. The output of **74** may be AC and/or DC at any voltage desired to fit a particular use and application of **80** as will be known to the person of ordinary skill in the art from the teachings herein. In the preferred embodiment of FIG. **14** it is desired that the battery be a rechargeable type and that it be charged whenever AC power is available from the transfer switch. It is further preferred that **74** include a switching type power supply to provide the desired DC and/or AC power at various voltages (and frequencies) which are needed by the various circuits within **80** in order that all desired circuits are operational whether AC power is available from the transfer switch or not. In this manner **80** may operate to provide control of the coupling of power to the load as taught herein. In particular, in the event grid power is lost and there is a delay before power is restored via the transfer switch, microprocessor **37** will have recorded the state of power consumption by the load immediately before power loss, will have a timer to determine the amount of time power has been lost and will have available load characteristics and/or other data which is used to determine the manner in which backup power may be coupled to the load when available. As one example, when an air conditioner compressor was running when the power is lost the microprocessor will know not to couple backup power from the transfer switch to the air conditioner until sufficient time has passed to allow head pressure to bleed off thus preventing excessive starting current or compressor stall. The user interface **77** may operate to provide various interaction between the user and microprocessor, and via the microprocessor to the load control as described elsewhere herein and in addition allows an installer to configure **80** to operate with a particular load.

In particular, it is desired that the microprocessor and/or load control may be accessed via user interface **77** in order to identify the particular load (and its characteristics) to the system and configure the system and/or microprocessor **37** to the particular load at the time load control **80** is installed in the system, or at subsequent times for example such as when the load or its characteristics are changed. This user capability will facilitate physical installation of **80** in near proximity to the load, for example at an outside air conditioner compressor and will reduce the number to trips between the load (and **80**) and the load control which likely will be located near the transfer switch, the utility service entrance or a location convenient to the home owner.

FIG. **15** shows a commercially valuable embodiment of load control **80** like that of FIG. **14** but which is physically separated into two sections, a high voltage section **80**H and a low voltage section **80**L. The two sections will facilitate design and manufacture to meet a particular application, including various testing and regulatory approvals. The low voltage section may be configured to provide a desired level of features and functionality for a particular system of level of systems and the high voltage section may be configured to provide a desired level of features and/or type of control of the load. Both sections may for example have options which may be installed after manufacture, such as the aforementioned capability of having relay and/or current control options installed at the time of installation to match operation of **80** with a particular load. It is desired that the interface between the low and high voltage sections be compatible for all combinations thereof. For example, the

low voltage section may be configured in several models starting with a basic, low cost model with wired communications and a simple user interface to allow the user to only assign an identifier to each device in a small system with advanced, higher cost models (or installation of options) providing more features such as keypads, LCD displays, additional configuration and advanced programmability capabilities, wireless communications, etc.

The high voltage section may likewise configured in several models from low cost basic to higher cost advanced models (or installation of options) to accommodate various power sources and loads such as particular operating voltages, maximum load currents and multiple power phases. In this fashion a manufacturer may sell a small number of low voltage section models and a small number of high voltage section models with a particular system installer choosing the type and number of each model and options to match the particular system being installed. Additionally separate high voltage models may be utilized for relay or current control or a single model may incorporate both relay and current control or may incorporate multiple relays and/or current control devices. The high voltage devices may be controlled by a lesser number of low voltage sections or even a single low voltage section if desired, the latter being particularly well suited for utilizing the invention with, or incorporating the invention into, the transfer switch, power entrance service panel, a power sub-panel or any of the various local power generating devices taught herein, for example with respect to FIG. **8**.

As an example of the usefulness of separate sections and options, a manufacturer might offer only one low voltage section with options for: user keypad, LCD display, relay **83** and wireless communications link **29***k* and two high voltage sections, one for single phase and one for multiple phase power, each with options for: current sensing, latching or simple relays of differing voltage and current ratings, current control circuits for differing voltage and current ratings.

The physically separated sections **80**H and **80**L will also facilitate installation and operation of the invention. For example by keeping all of the high voltage components in the **80**H section safety is enhanced by only having a minimum number of circuits which are potentially exposed to high voltages and to electrical interference and noise created by controlling high voltages and currents. Additionally physical size is kept to a minimum thereby facilitating installation of that section near to or within the enclosure which houses the load. On the other hand, the low voltage section may be designed without overdue attention to high voltage, high current, interference, noise, regulatory and safety considerations. For example, by utilizing only low voltages in the 24 volt and below range various regulatory approvals will not be needed for the **80**L section.

FIG. **15** shows an embodiment of the invention where high voltage and high current (e.g. a 240 VAC 50 amp supply) from the transfer switch is coupled to the load **18** via a relay with a 24 VAC control (coil). In addition a class 2 (dry environment) or class 3 (wet environment) 240 volt to 24 volt transformer **81** is utilized to provide low voltage for the **80**L section. It is desired that **81** be connected to the 240 volt power physically close to **80**H in order that the 24 volt output may be used by microprocessor **37** (via **78**) to monitor the 240 volt power from the transfer switch. For example in a simple form the 24 volt AC output of **81** is monitored by the microprocessor circuit **37** to determine and compare the RMS voltage to a high and a low limit. If desired, the amount of time that voltage exceeds the high limit or falls below the low limit may be monitored as well. If the voltage falls outside of either acceptable limit for more than a predetermined time then the microprocessor circuit **37** may actuate relay **83**, which in turn causes relay **34** to open thus disconnecting the load **18** from the transfer switch. The parameters for the high and low voltage limits as well as the aforementioned time duration are preferred to be programmable in order to protect load **18** from damage as well as to prevent it from contributing to overload and possible damage of the backup power source during a power outage as will be known to one of ordinary skill in the art from the teachings herein. If desired a current monitor **23***d*, such as the aforementioned current transformer may be incorporated, as well as a relay position circuit **79** may be included to facilitate microprocessor circuit **37** control of power coupling to load **18**.

Supply **81** is preferred to be a 24 volt AC transformer to provide low voltage power to section **80**L and is chosen because it is a readily available standard device used in home heating and air conditioning controls, doorbells and elsewhere. Other AC or DC supplies may be utilized if desired, for example plug in 120 volt to low voltage AC or DC power supplies frequently referred to as "wall warts" may be utilized. In addition, the battery charger and/or battery of **74** may be incorporated as well. It will be noted that if a power supply which incorporates a voltage regulation circuit is utilized, the regulation will prevent monitoring of the voltage of the power from the transfer switch except for the loss of power causing the output of **81** to shut down. If a simple voltage presence is all that is desired then that may be monitored via microprocessor circuit **37** but if a more accurate indication of the actual voltage is needed other provisions will be required as discussed elsewhere herein.

Relay position circuit **79** is simply shown in the drawings as a connection from the relay **34** to the microprocessor circuit **37**. The relay position circuit is preferred to incorporate a switch or switches which are coupled to the position of the movable portion of the relay, e.g. its armature, or to otherwise respond to its state, in order to open or close electrical circuitry in response to that position or state. Coupling may be by mechanical, magnetic, optical, electrical or other well-known coupling and the switch action itself may be mechanical, magnetic, optical, solid state or other well-known action. For a two state (open/closed) relay the switching action may indicate the relay closed or open or both as desired. For example, a switch may close a two wire circuit when the relay is closed, or may close a two wire circuit when the relay is open, or may include a three wire circuit with a common, first wire and second wire with the switch closing the common to first wire circuit with the relay in a first position (e.g. closed) and close the common to the second wire circuit when the relay is in another position (e.g. open).

Relays may incorporate more than two positions or states, e.g. the open, latched open, closed, latched closed of one type of latching relay, and the position circuit **79** may be configured to indicate all or a portion of the possible positions or states. Additionally, as discussed herein the relay **34** may be replaced by or augmented with other load control functions, circuits or devices, for example such as a circuit breaker capability or an electronic current limit with or without a switch, and the relay position circuit **79** may be configured to indicate such operation(s). For example **79** may indicate breaker open, breaker closed, breaker tripped open in response to excessive current, or **79** may indicate relay open, relay closed, relay closed with a first current limit, relay closed with a second current limit. The relay

position circuit **79** may also be combined with other operations as desired, for example the relay position **79** and current sense **23***d* may be combined to report to the microprocessor **37** over a shared or common communications channel. As another example the relay position **79** may be shared by a relay and a separate circuit breaker with **79** reporting relay open, relay closed and breaker tripped conditions (note it may be possible for the breaker to be tripped or closed while the relay is open or closed). The selection of particular circuit(s), action(s) and coupling(s) to fit a particular load and application will be well known to the person of ordinary skill in the art from the teachings herein and may be resorted to without departing from the spirit and scope of the invention as claimed.

Various circuit connections **82** for connecting the 24 VAC supply from **81**, 24 VAC relay control, relay position and current circuit circuits to **80**L are provided and it is desired that these connections be selected to facilitate installation of the sections via low voltage wiring, e.g. screw terminals, punch terminals or the like. Accordingly the implementation of **80**H may be performed with many off the shelf components, e.g. a U.L. approved class 2 transformer and relay mounted in a U.L. approved enclosure (which may be the air conditioner housing) and in a large number of air conditioners and other loads the relay and transformer are already present such that only **80**L needs to be added to provide a controllable load **48**. The low voltage portion **80**L may then be installed nearby the load, but in a location convenient to the installer, for example mounted in a waterproof plastic case mounted to the outside of the load housing or an adjacent building wall. In such an installation the connections from the load housing (or **80**H) to **80**L may be achieved by use of an 8 conductor cable such as common 20 gauge thermostat wire. If the current transformer and relay position elements are not needed, such as in many air conditioners, a 4 or 3 wire (one side of the 24 VAC line will usually be common) thermostat cable may be used. Other AC or DC voltages may be utilized as well.

FIG. **15** section **80**L includes a battery and charger circuit **74** to receive the AC (or DC) voltage from an external source. In this example power supply **81** serves as the external source, however power may be received from other sources as desired including via one or more wired communications link. The 24 volt AC power is preferably also made available to external devices via connections **82**, and shown in this drawing as being used to control relay **34** via relay **83** and dashed connections. Connections **82** which are preferred to be readily available, low cost and easy to use terminals and can for example be spade lugs, screw, press fit or quick connect terminals and may be assembled on open or enclosed terminal blocks. The battery and charger circuit **74** provide backup (DC) power **75** with microprocessor **37**, wireless link **29***k* having antenna **76** (which may be internal or external to **80**L), user interface **77** and other circuits if desired, powered thereby. As with **74** of FIG. **14** a switching power supply may be incorporated to provide multiple output DC and/or AC voltages as desired including power **84** to external connectors **82**.

While DC voltage **75** could be coupled to external connectors, it is preferred that **84** be a separate DC output which is isolated from **75** in order to protect **75**, and the circuits it powers, from any adverse effects which would be experienced if some external device failed in a short circuit mode. In that event, power **84** might be shut down due to the short circuit however **75** will continue unaffected. In the embodiment of **80**L it is desired for reasons of installation flexibility that the section includes a relay **83** which is controlled by the microprocessor and that the relay contacts are made available for external connection and further that one or more of these connections be current limited or otherwise protected, in this instance shown by the use of **86** in the relay swinger circuit. DC voltage output(s) **85** from the microprocessor circuit are also preferred to be made available for external connection as shown, including protection **86**.

For example a microprocessor output may control a 12 volt DC supply connected to a screw terminal as shown by **85**. Connections to external connection terminals, if not otherwise protected (e.g. as with class 2 or 3 transformers) are preferably made via protection **86**. Positive temperature coefficient (PTC)_resettable fuses are particularly useful choices for such protection but other means of protection including for example current limiting circuits and devices, standard or other automatically resettable fuses or standard or automatically resettable circuit breakers may be utilized if desired. In this fashion **80**L may be easily connected to **80**H. **80**L may as well be connected to various types of systems and devices by providing DC and/or AC voltage sources as well as normally open and normally closed relay contacts via screw terminal or other convenient types of connections **82**. As shown via dashed lines between **80**L and **80**H in FIG. **15** these connections may be configured to control the coupling of power to the load in **80**H. For example a microprocessor output may control a 12 volt DC supply connected to a screw terminal. Connections to external connection terminals, if not otherwise protected (e.g. as with class 2 or 3 transformers) are preferably made via protection **86**. Positive temperature coefficient (PCT) resettable fuses are particularly useful choices but other means of protection including for example current limiting circuits and devices, standard or other automatically resettable fuses or standard or automatically resettable circuit breakers may be utilized if desired. In this fashion **80**L may be easily connected to **80**H as well as various types of systems and devices by providing DC and/or AC voltage sources as well as normally open and normally closed relay contacts via screw terminal or other convenient types of connections **82**. As shown via dashed lines between **80**L and **80**H in FIG. **15** these connections may be configured to control the coupling of power to the load in **80**H.

In addition it is desired that the type and number of circuits and their connections **82** be chosen in order to facilitate commonality of connections between various models of high voltage and low voltage sections and in particular any circuits unused in a particular installation be designed such that having any unconnected terminal(s) will not have an adverse effect on the system. For example if a highly featured low voltage section **80**L provides for a number of connections **82** to the high voltage section **80**H and external devices such as **81**, and it is desired that if a basic high voltage section **80**H is connected to that **80**L, any unused circuits (or circuits which are intended to be used but are miswired or defective) are automatically detected by **80**L such that they are reported to the user interface and/or load control, disregarded or the circuits are otherwise designed to accommodate the lack of connection.

One example in understanding this feature may be given in respect to current sense **23***d*. If the low voltage section **80**L is designed to accept a connection to **23***d* but the high voltage section **80**H is a basic model which does not include a current sense then **80**L is desired to operate to detect the lack of a connection to a current sense and operate without it. This operation may be achieved via sensing the voltage, resistance or other characteristic (for example such as impedance or capacitance) between the connections and

detecting a high resistance if there is no connection to **23***d* and a known resistance if **23***d* is connected. The microprocessor circuit **37** may operate to perform this sensing or to respond to other sensing circuitry. Multiple types of current sense devices may be detected and accommodated in this fashion, assuming each type has a different resistance or other characteristic. Previously present circuits which become disconnected, silent or otherwise inoperative or suspect (e.g. because of unusual readings) may be detected via the microprocessor circuit **37** and reported via the user interface **77**, via communications link **29** to load control **25** or otherwise.

Another manner of accommodating unconnected circuits is via circuit design of the particular circuit. For example a resistor or other component may be connected between two current sense connections on the low voltage section **80**L or the high voltage section **80**H to ensure little or no static charge or noise will build up on the circuits and thus zero current will be sensed and reported in the microprocessor circuit **37** if no current sense **23***d* is connected. The resistor or other component may also be used to signify the presence of the current sense **23***d*. If the current sense circuit **23***d* is connected the microprocessor circuit **37** will eventually be able to detect or respond to a voltage on the circuit (corresponding to a current flow in the load) when the relay **34** is closed and thus detects that the current source is connected. The microprocessor circuit **37** may also detect or respond to a voltage on the circuit (corresponding to a current flow in the load) and that voltage (load current flow) going to zero immediately after the relay **34** opens and know the current sense is connected. At initial installation or other times the microprocessor circuit **37** may be caused to energize relay **34** to determine if a load sensor is connected, or to energize an alternative voltage or current circuit in the high voltage section **80**H to simulate a current flowing to the load and thereby detect if the current sense circuit **23***d* is connected, which may also be used to calibrate the current sense circuit. These and other circuit operations and/or designs may be incorporated at either or both ends of the circuit communications between the two modules or the connections themselves to allow detection of connected or unconnected circuits, effectively communicating the configuration of one section or device to another. Microprocessor circuit **37** may also be programmed by an installer via user interface **77** and/or communications link **29** to identify the presence or absence of particular models, devices, features, options and the like.

It is envisioned in the commercially valuable embodiments of FIGS. **14** and **15** (as well as those of the of the preceding Figures) that for cost reduction reasons the microprocessor circuit **37** will be configured to perform many of the functions and features described, with the relays **83** and **34**, current control **44**, wireless communications link **29***k* and associated antenna, user interface **77** and battery and charger **74**, current sense **23***d*, and power supply **81** being separate circuits for reasons of their diverse physical and/or electrical requirements. For example relay **34** is required to handle high voltages and currents which with present technology make it difficult to incorporate that relay function into the microprocessor circuit **37**. In keeping with the teachings herein, the load control **80** (or **80**H and/or **80**L) of FIG. **14** or **15** and their individual circuits and functions may be configured by the person of ordinary skill in the art to fit particular needs and sets of requirements It is envisioned however that in the practice of the invention for particular applications and their requirements that combining various of the individual circuits and functions, and/or further separating of combined functions, removing features and functions as well as adding additional features and functions may be useful. Additionally, for higher volume applications it is envisioned that ARM and RISC types of processors, along with embedded designs and even ASIC devices will become attractive technologies for implementing portions of the present invention.

FIG. **16** shows a simplified diagram of a further load control embodiment **88** which is coupled to power from the genset which is supplied via a transfer switch and controlling the power supplied to a load **16** with a current control **44**. The load control circuit **25***c*, senses one or more parameter of the power, in this example the A.C. power frequency via connection **87** as well as the current drawn by the load via a current sense **23***d* and controls the current delivered to the load via control of current control **44**. Load control **25***c* may also sense the voltage, distortion or other parameter of the power via **87** and incorporate those measurements into the control. In this embodiment the load control circuit **25***c* will operate to sense the power frequency (and/or voltage or other parameter) via **87** or otherwise and when the load in the genset nears or enters an overload condition the power to the oven will be reduced or limited or even turned off, thereby preventing or removing a genset overload.

FIG. **17** shows a simplified diagram of a further load control embodiment **89** which is coupled to power from the genset and connecting or disconnecting the power supplied to the load via switch **34**. The load control circuit **25***d* senses one or more parameter of the power, in this example the A.C. power frequency (and/or voltage or other parameter) via connection **87** and controls the connection of the load. In this embodiment a clothes dryer **17** is shown as the load by way of example and it will be recognized that if the voltage to the dryer were to be reduced by any substantial amount the electric motor which provides rotation of the dryer drum could overheat and be damaged. Otherwise, any slowing of the electric motor caused by reduced voltage (even for synchronous motors) could cause reduced airflow through the dryer and create a fire hazard. For these reasons it is more desirable to simply switch the dryer on and off via switch **34** than to attempt to limit the current supplied to the dryer. The embodiments of FIGS. **16** and **17** may operate with power inputs from any power source known in the art in which one or more parameter of the power changes as the load on the power source approaches maximum or enters overload, or a novel power source in which one or more parameter of the power is controlled in response to the load thereon as will be described in more detail below.

FIG. **18** shows a more detailed diagram of the preferred load control circuit **25***c* having a transformer **81** which is connected to the A.C. power via **87**, a frequency measurement circuit **90** responsive to the A.C. power via transformer **81** and supplying frequency information to microprocessor **37**. A power supply **74** receives low voltage A.C. power from transformer **81** and supplies power to the circuitry of **25***c* as necessary. A user display **91** and user input **92** allow a user to communicate with the microprocessor **37** and a timebase **93** provides time information to **37**. A current measurement circuit **95** is responsive to a current sensor **23***d* (not shown in FIG. **18**) to provide load current information to **37** with **37** operating to communicate with a switch and/or limit driver circuit **94** to control the associated load. Microprocessor **37** may also be configured to sense one or more parameter of the power for example such as the voltage at **87** either directly or from the output of transformer **81** by using a voltage measurement circuit or otherwise as will be known from the present teachings. It will be recognized that the

circuit may also be used as the load control **25***d* and if desired may eliminate or not utilize the current measurement circuit **95**. Additionally the circuit of FIG. **18** may also be utilized to control a parameter of the power for example such as by control of the frequency and/or voltage of the A.C. power supplied by the genset in response to the load on the genset as will be described further below.

Load control circuit **25***c* may include a transformer **81** coupled to the A.C. power from the genset (e.g. which is supplied for a particular load) and to provide a safer low voltage for use by the circuitry. In particular it is desired that **81** be the aforementioned Class 2 (dry) or Class 3 (wet) transformer having an input voltage matching the genset voltage (e.g. 120 volts) and an output voltage of 24 volts as is well known in the genset industry. Other types of transformers may be utilized as well to fit particular needs. Power supply **74** is preferred to receive the A.C. voltage from the transformer and provide battery backed up D.C. power out at a voltage, or voltages, utilized by the circuitry of **25***c*. In particular 5 or 3.3 volt outputs for powering the various circuits **90-92**, **37** and **93-95** are desired.

A microprocessor circuit **37** is provided which operates to interface with the circuits **90-92** and **93-95** to receive A.C. power frequency information from frequency measurement circuit **90**, optionally receives parameters such as voltage information from **87** or otherwise, receives timebase information from timebase **93** (which may be provided by the crystal oscillator for the microprocessor clock and internal circuitry), current information from current measurement circuit **95**, and user information from a user input **92**, and to provide messages to the user via user display **91** and control of the current control **44** of FIG. **16** or load switch **34** of FIG. **17**. Optionally the circuitry may provide control of the speed of the genset engine or voltage of the generator output (not shown) via an electronic switch/limit driver circuit **94**. User display **91** may be of any type well known in the art suitable to display messages to the user as taught herein and may also be utilized to facilitate user input, to display operating conditions, provide fault warnings and to display other messages as will be known to the person of ordinary skill from the teachings herein. User input **92** may be of any type well known in the art suitable for input by the user as will be known to the person of ordinary skill from the teachings herein. User display **91** and user input **92** may be combined if desired, e.g. via a touchscreen.

It is preferred that **25***c* be mechanically configured in order that it may be physically located next to current control **44**, load switch **34**, the controlled load, e.g. **16** or **17**. In particular it is desired that it be incorporated with those components within their enclosures for ease of installation. In particular, by incorporating the elements as shown in FIGS. **16** and **17**, or within the load, or within the genset the additional wiring necessary for connection of the load, or the genset is kept to a minimum. In this fashion control of individual loads may be provided without the need for a more complex load control communicating via links to a plurality of load limits and load switches thus providing flexible and cost effective overload protection, but at the potential cost of accuracy due to reliance on power parameters measured at that load as compared to the embodiments of the earlier figures which may operate with accurate measurement of the total power output of the power generator.

In operation **25***c* or **25***d* is preferred to monitor power parameters for example the A.C. frequency (and/or voltage) of the supplied power and control the load accordingly. In particular the characteristics of the frequency (and/or voltage) versus load are preferred to be programmed into the microprocessor either at manufacture_or by the user during installation in order that the microprocessor may know if the load being supplied by the generator is below overload, near overload, slightly overloaded, significantly overloaded or highly overloaded. It is also preferred that the microprocessor be programmed in order to know the type of load being controlled and its priority and to control the load, via driver **94** according to the amount of overload, the time that amount of overload has existed and particular characteristics of the load.

As one example if the genset is nearing overload the load control circuit will operate to prevent a low priority load from being connected to prevent additional loading of the genset, or to disconnect or limit the current supplied to a low priority load in order to reduce the load already coupled to the genset. As another example if the genset suddenly becomes significantly or highly overloaded a low priority load would be prevented from being connected or immediately disconnected if it is connected. Lower priority loads are preferred to be connected only when the genset is below overload, or if a high priority load is relatively small it may be connected when the genset is only slightly overloaded. If already connected when the genset goes into any overload condition the higher priority load would be disconnected only after a time delay (set by the user) in order to give other lower priority loads time to be disconnected by their controllers. In this respect it may be recognized that a plurality of FIGS. **16** and/or **17** load controls may be utilized with each one programmed with a different time delay in order that the lowest priority load is disconnected first, thus avoiding the prior art problem of disconnecting all lower priority loads simultaneously. In addition a low priority load may be disconnected or left unconnected with no attempt to reconnect the load being made until the genset is below (or well below) overload thus preventing the prior art problem of blindly connecting low priority loads. Of course multiple driver **94** and/or current measurement circuits **95** may be incorporated within load control **25***c* in order to monitor and control multiple loads according to the teachings herein.

Additionally in **25***c* or **25***d* current measurement **95** may be utilized to monitor the current drawn by a load and to control that or other loads accordingly. For example if the load is one that should not be connected immediately after is disconnected, such as an air conditioner compressor, **95** may be utilized by the microprocessor **37** to determine when the load was last drawing current and a timer used to prevent reconnection before it is safe. It is preferred that the microprocessor **37** have stored parameters pertaining to at least the frequency at which the genset is exhibiting an overload, and may also have stored parameters pertaining to time durations versus overload and parameters pertaining to the load being controlled, priorities and desired system operation. The stored parameters may be stored at the time of manufacture, at the time of installation or later, e.g. via user input **92**, or may be determined by the microprocessor during operation and stored for future use.

A novel feature of load control circuit **25***c* is that it may be utilized to control one or more parameter of the power output from the genset in order to convey load information to load controls **88** and **89**. For example the speed of the genset engine and thus the power frequency, and/or the alternator control and thus the voltage, of the output A.C. power may be controlled as a measure of the loading of the genset. In this fashion this reasonably accurate measure is coupled to individual load controls for control of those individual loads without the need for separate communica-

tions therebetween. In this fashion the prior art need to hard wire communications from the transfer switch to the load contactor is eliminated while at the same time improving the accuracy of overload detection. This capability is particularly useful with typical gensets which have an engine sized such that the alternator will overload before the engine slows down, but is also useful for gensets where the engine will slow down first. The current supplied by the genset is preferred to be sensed with a current sense such as **23***d* which is coupled to current measurement **95**. That current is then utilized by the microprocessor **37** to generate a control signal (or a plurality of control signals) via driver **94** which is coupled to the genset engine's engine control module, or otherwise to the throttle of the engine in order to control the engine speed and thus the power frequency by know amounts in response to the load.

The driver **94** or another driver may also be coupled to the alternator to control the voltage output if desired, either in addition to frequency control or in place of frequency control. For example if the genset is at 95% of its rated load the power frequency can be lowered from a steady state 60 Hz to for example a steady state 59.5 Hz. If voltage adjustment is used the voltage may be lowered from a steady state 120 volts to 115 volts. These are relatively small amounts but may be measured by frequency measurement circuits **90** and/or voltage measure function of **37** in individual load controls to signify that the genset is nearing full output capability. It is preferred that a microprocessor **37** which is utilized for such frequency and/or voltage control have stored parameters related to current levels relative to overload and desired frequency and/or voltage relative to current or loading levels. The stored parameters may be stored at the time of manufacture, at the time of installation or later, e.g. via user input **92**, or may be determined by the microprocessor during operation and stored for future use.

If the genset goes into overload, for example 105% of its rated load, the microprocessor can then operate to adjust the frequency and/or voltage to a different amount, for example 59 Hz and 110 volts. This will let the individual load control circuits know that the genset is slightly overloaded in order that they can control their loads accordingly. For example at this value one or more low priority loads can be limited or disconnected, preferable in sequence according to their priority with the lowest priority loads being disconnected first, until the genset load returns to an acceptable amount which would result in the genset control returning the frequency to 60 Hz and 120 volts. For very low loads the frequency could also be increased, for example if the genset is only loaded at 50% the frequency could be set at 60.5 Hz and the voltage set to 125 volts.

Of course setting engine RPM and/or frequency accurately in response to load is useful in the preferred embodiment and the microprocessor **37** may operate to sense that RPM indirectly by monitoring the power frequency via **13** and sense voltage via its voltage circuit. In this fashion highly accurate settings may be established with any inaccuracies being sensed and removed or reduced via adjustment of the control provided to the engine via **90**. It is noted that the use of frequency measurement circuit **90** and voltage sensing circuitry in **37** are provided by way of example and one of ordinary skill will know to practice the invention with many variations of circuitry and microprocessor types **37**. For example separate voltage and frequency circuits may be utilized with their outputs coupled to **37**, a combined voltage and frequency circuit may be utilized with its output coupled to **37**, or for some microprocessors having analog input capabilities, e.g. one with an analog to digital converter, a low voltage version of **87** (e.g. the output of transformer **81** coupled via a resistor divider or otherwise) may be coupled to **37** as known in the art and any desired power parameter or combination thereof may be determined directly thereby.

It is preferred to accurately control engine RPM and many gensets already incorporate a frequency control circuit so that the driver **94** should be coupled to that frequency control instead of the engine control module or throttle. It is also possible to modify some frequency control circuits to accomplish a known relationship between power frequency and genset load without the use of the full circuitry of **25***c*. It is still further possible that the voltage regulator or other circuitry of the alternator which controls output voltage may be coupled to be controlled via **37** utilizing a driver circuit **94** or otherwise or that that control circuitry may be modified to provide a known relationship between output voltage and power without utilizing the full circuitry of **25***c* as will be known from the teachings herein. Further, both voltage and frequency control of a genset may be utilized to convey load information to load controls.

Whether there is a dedicated control of genset frequency or voltage in response to the load, or merely a simple engine speed or alternator control without any controlled response to load (e.g. via a circuit **25***c*), it is possible for the microprocessor of a load control **25***c* to operate to infer load conditions by measurement of one or more parameters of the output power. One or more of frequency, voltage, distortion and noise changes which take place as loads are connected and disconnected as previously described may be utilized. Performance of a genset generally decreases as it approaches overload and that decreased performance often results in measurable changes in one or more parameter such as frequency, voltage, distortion and noise which may be utilized to sense loading. As an example, when the genset is lightly loaded a refrigerator motor starting might cause the frequency to only dip 0.1 Hz for 3 seconds and when the genset is near maximum load the same motor starting would cause a 0.3 Hz dip for 3 seconds. The voltage might dip one volt if lightly loaded and 5 volts if near maximum. Distortion, such as sine wave distortion of the power might not increase at all if lightly loaded but jump to 5% if near maximum output and noise might increase by 10 Db.

More generally, for a particular genset the parameters such as frequency and/or voltage variations of the output power may be known to increase in size or duration as the genset approaches full load or enters overload conditions. By monitoring these parameter changes which take place with the somewhat random normal load changes during operation the microprocessor may estimate the amount of load. In particular by utilizing the aforementioned circuitry to perform current and voltage measurements combined with either a known connection of a load such as an air conditioner compressor or the somewhat random changes of normal operation it will be possible to estimate the total load on the genset. Such monitoring is particularly useful for controlling large loads where it is undesirable to allow those loads to impart large step loads to an already heavily loaded genset.

The above described feature of determining genset loading from output power parameters such as the frequency, voltage, distortion or noise resulting from a particular load change is particularly useful when multiple loads are controlled by a given load control circuit. In this fashion differing loads of differing priority may be controlled to optimize powering those loads without overloading the genset, according to information about the loads, genset, priorities and desired performance of the system as pro-

grammed in the load control operation time of manufacture, or manually or automatically at time of installation, or later via automated monitoring of power parameters or manually via the user display and input.

One example of an embodiment of the invention described above which will find particular usefulness in modern homes and businesses is the incorporation of the load control **25***b* and various communications links within, or combined with, a more extensive home control system in order to provide flexible backup power in the event of a power grid failure and to manage the cost of power consumed by the loads. It is preferred that the a home control system (or part of the system) will automatically manage the operation of the home as is well known in the home control industry, e.g. to set temperatures, provide home operating modes such as away and occupied, operate lighting and entertainment appliances, operate door locks and control access to the home, monitor the home for failures and intrusions, all of which may be performed automatically or as commanded or programmed directly or remotely by the home owner. U.S. Pat. No. 7,379,778 describes one such home control system. Of particular advantage in such a combination is the relative ease of adjusting load priorities. For example if the home control is programmed for unoccupied operation various loads such as hot water heaters, air conditioners, ovens and other devices which are primarily used for comfort of the occupants can be assigned low priorities.

Additionally the present invention is desired to be incorporated in or otherwise combined with the home (or business) control system to include not only control of power consumption during times of limited available power or failure, such as when the grid power goes into brownout or fails, but also to facilitate reduced waste and lowered cost. Additionally the incorporation in a home control system allows the invention to respond directly or remotely via telephone, internet or other communications link(s) as described herein to provide the home (or business) owner with information about the home, including grid, generator and load operations and to additionally respond to desired priorities for powering devices and otherwise operating the home (or business). In particular as explained above several types of power sources generate excess heat in their operation, which excess heat may be utilized under control of load control **25***b* to provide heating, e.g. water heating or radiant heating as requested by the automation system.

Exemplary Small Backup Power System Embodiment

An embodiment of the invention as used with small backup power systems, which is believed to achieve a commercially desirable tradeoff of performance and cost is given by way of example. This embodiment is described with respect to FIG. **8** as used in a home and is explained in more detail below and may operate to prevent overloading of one or more of the power sources **12**, **13** and **50** and in particular may be utilized to allow the use of distribution panels having amperage ratings higher than the service or backup power source rating. The explanations below may depart from the more general explanations given above under the description of the preferred embodiment in specific areas.

This small backup power systems utilizes a backup generator which is only capable of providing power for part of the maximum possible load which can be connected when the power grid fails and the total load must be controlled to prevent an overload. With some prior art systems such as that of FIG. **2** this limit is hard wired, that is, only certain higher priority loads are connected to the backup generator and those lower priority loads which are not connected simply go without power. In other prior art systems such as that of FIG. **3** certain lower priority loads are connected but are all immediately disconnected if the frequency of the AC power from the generator drops as a result of an overload. Those disconnected loads are then reconnected after a time delay without regard to whether the generator will be able to power it and thus a high probability that another overload may be created.

Neither of these systems is capable of a high degree of utilization of the power available from the generator with high overload immunity, in the first low priority loads are never powered and the generator may run well below its load capability and in the second a low priority load may be powered part of the time but when it is disconnected after an overload it will not be reconnected until after a time delay which is unrelated to the generator's ability to power that load at that later time, i.e. it is blindly reconnected which may result in an instant overload and possible damage or circuit breaker tripping. In addition when utilizing prior art gensets (i.e. those which do not have an active control of frequency in response to loading) and relying on power frequency as a measure of overload the detection of overloads has less that desired reliability in many cases.

Recognizing the above faults, this embodiment of FIG. **8** controls the total load presented to the generator **13** to connect some or all loads **16-19** & **48** according to a priority, which priority may be changed manually or automatically. In particular the load control **25***b* is programmed with parameters pertaining to the power sources and loads, which parameters are necessary to achieve the desired mode(s) of operation of the system. For example **25***b* is preferred to be programmed with the maximum current output of the solar panel **50** (if utilized), the maximum current output of the generator **13**, the current output for optimum efficiency of the generator **13** and the current drawn (e.g. load) by each load which **25***b* is capable of controlling (e.g. connecting). A group of high priority loads **19** such as selected lights, home controls, alarms, food storage appliances and the like which are desired to be powered whether the home is occupied or not are always connected and receive power from the transfer switch **47** upon loss of grid power, it being preferred that these high priority loads are selected to ensure that they are not capable of overloading the generator at their maximum current demand.

When operating with the solar panel **50** (if provided) and/or generator **13** it is preferred that load control **25***b* operate a) to prevent overloading the generator **13** or solar panel **50** by preventing or limiting the connection of loads which would cause an overload, b) to immediately cure an overload by promptly disconnecting or limiting one or more connected load, c) to maximize efficiency of solar panel **50** and/or generator **13** by allowing operation of loads which the generator and/or solar panel are capable of powering when they are operating below their optimum capability, d) to alert the home owner that power is not available to power one or more particular device(s) which the home owner may wish to operate and e) allow the home owner to decide what to turn off (or limit or leave off) in order to prevent having a device (and possibly several others) turned off shortly after the desired device turned on due to an overload. Selected loads that may but do not need to be connected are preferred to be connected when the generator and/or solar panel is operating below its optimum capacity or efficiency in order to provide operation closer to that optimum. These operations are performed by the load control **25***b* in response to the loads currently connected to the solar panel **50** and

generator **13** as measured via current sense devices **23***a* and **23***c* and the herein described stored parameters for the generator and solar panel, as well as stored parameters for loads which can be connected or otherwise controlled by **25***b*.

When the generator is operating well below optimum, either during exercising or during outages, an increase in the efficiency of the operation is achieved by connecting lower priority loads such as battery chargers, water heaters, heat and air conditioning units. Accordingly, different modes of operation may be assigned to the backup system by the user via **21** or otherwise, with the user selecting priority of connection of the loads and the system automatically connecting and disconnecting loads to best achieve the priority based modes of operation under control of load control **25***b* operating in conjunction with the other elements of the load control system shown in FIG. **8**.

Importantly, the priority of one or more load(s) is preferred to be changed automatically, or by the user if needed with the changed priority being permanently stored, at least until it is updated, for an amount of time selected by the user, or for other conditions selected by the user. For example to cook a meal which has already been started when the grid power goes off. The load priority for the oven may be changed automatically by **25***b* recognizing that the oven was in use when power failure occurred, with the priority of the oven being returned to its previous value when the cooking ends as sensed by the current being drawn by the oven or otherwise. Alternatively, if the priority is not automatically changed by **25***b* the user may assign a higher priority to the oven for a time period such as an hour to allow completion of the cooking, or in response to the condition of the oven no longer utilizing a large current for 15 minutes indicating the cooking is completed. Thermal sensors may also be utilized to provide oven temperature to **25***b* as part of the miscellaneous devices **21**, which temperature may be utilized to set priority.

Priorities may be automatically changed, temporarily, permanently or repeatedly in response to environmental or other conditions via **21** or otherwise. For example some lights are more important at night than in the daytime and heating is more important when it is cold outside than when it is hot, but this importance is tempered by whether or not anybody is home and thus priorities for such items are preferred to be set at a first value when the home is not occupied and/or during daylight hours and a second value when the home is occupied and/or during night hours. As another example a temperature sensor may be provided for a food storage appliance such as a freezer, refrigerator or wine cooler as part of **21** and if the temperature should approach a dangerous level (high or low) that food storage appliance can be made a high priority until a safer temperature is reached. If the problem of the food appliance approaching a dangerous temperature occurs often during power loss events its priority may be automatically changed to a higher priority by **25***b* whereas the priority may be automatically lowered if the problem infrequently or never occurs. Such automatic changes will serve to adjust operation to a more optimum condition.

Decisions can also be aimed at efficiency. One substantial consideration which can be utilized is the cost of providing power from the grid vs. cost from the generator, for example for a homeowner having one or more electric vehicle. If power can be obtained from the electric utility or elsewhere at lower cost during certain times, for example during the night, the load control can be utilized to control loads in a manner to best take advantage of the lower cost power. Load control **25***b* may receive the cost of grid power at various times and the cost of generator fuel (e.g. natural gas) automatically via the internet or otherwise and calculate the best time to charge the vehicle's batteries from the grid or alternatively from the generator even though grid power is available, depending on the cost. The load control **25***b* may also take into account the need to exercise the generator and delay battery charging until an upcoming scheduled exercise, advance the exercise time once to charge the battery or change the exercise time schedule to accommodate the home owner's changing vehicle usage.

The load control is preferred to utilize intelligent timing for connecting and disconnecting loads to one or more power sources in order that the total load on any one power source is kept at or below the maximum output capability of that source, or alternatively at or near an optimum efficiency level, which may be at or below the maximum output capability. It is preferred that at all times the home owner has the opportunity to interact with the load control processor in order to facilitate any out of the ordinary power needs the home owner may desire or require and which are not automatically provided for by the load control. For example the home owner may choose to turn off an air conditioner or vehicle charger for 30 minutes in order to allow normally low priority clothes dryer to be used. As another example the home owner may want to limit the current supplied to an oven (causing the heating element to be on for longer periods of time) to allow an air conditioner to be used.

More generally, the present invention described herein may also be utilized to communicate with a power utility to allow that utility to manage power consumption, for example to cause partial or total removal of loads from the power grid as the utility deems desirable or necessary during times of high power consumption, lack of grid capacity or grid failure. The power company may notify the load control of possible or scheduled events pertaining to the supply of power from the grid, e.g. poor power quality (i.e. power not meeting specifications set by for example the utility, the home owner or a regulatory agency) or rolling blackouts. The load control will then cooperate with the utility to accomplish the desired degree of power consumed from the grid.

It may be desired that the utility company may interact with the load control to negotiate sending power to the grid from one or more power sources or loads e.g. during times of peak load. For example the power company could request that the load manager send power from the power sources **13**, or **50** or from the battery **68** via inverter **67** (FIG. **11**) or the like into the grid. The load manager may be configured to negotiate pricing with the electric utility for the power which it wishes to be delivered. In such negotiations the load manager is preferred to take into account the cost of power available from various sources which are available to it to transfer power back to the grid.

The several simplifications and operational related examples and exemplary descriptions used herein in conjunction with the descriptions of the prior art and the teachings of the preferred embodiment of the invention are not to be considered limiting of the inventive concepts which are herein disclosed. Although this invention has been described in its preferred embodiment with a certain degree of particularity, it is understood that the invention is not so limited and the present disclosure of the preferred embodiment with its various benefits, features and capabilities has been made by way of example and numerous changes in the details of construction and the combination and arrangement of parts may be resorted to in order to meet a particular level

of performance, reliability and cost without departing from the spirit and the scope of the invention as hereinafter claimed.

What is claimed is:

1. An apparatus for controlling the amount of power used by at least one of a group of loads which are powered by a small backup power system power source comprising an output circuit breaker, the apparatus including:

a) an electronic processor circuit including digital logic circuits, a digital parameter memory storing the maximum output power parameter for a small backup power system power source and at least one first load parameter for a first load, the maximum output power parameter being a manufacturer specified amount less than the amount of output power which will cause the output circuit breaker to trip;

b) a communications link providing a timely power output parameter for the small backup power system power source to the electronic processor circuit;

c) the electronic processor circuit communicating via a communications link with a load module and in response to the maximum output power parameter, the timely power output parameter and the first load parameter, operating in advance to restrict coupling the first load to the small backup power system power source when the small backup power system power source is not capable of powering the first load without exceeding the maximum output power parameter but less than the amount which trips the breaker.

2. An apparatus for controlling power provided to one or more loads of a group of loads by a small backup power system power source, the apparatus including:

a) an electronic processor circuit including a processor executing a program, a parameter memory storing the maximum output power parameter for a small backup power system power source having an output circuit breaker, and at least one first load parameter for the first load, the maximum output power parameter being less than the amount of power which would trip the output circuit breaker;

b) a communications link providing a timely power output parameter for the small backup power system power source to the electronic processor circuit;

c) the electronic processor circuit communicating via a communications link with a load limit circuit in response to the maximum output power parameter, the timely power output parameter and the first load parameter and operating in advance to prevent coupling an amount of power from the small backup power system power source to the first load which the small backup power system power source is not capable of providing without exceeding the maximum output power parameter but which is below an amount which trips the breaker.

3. An apparatus for controlling the amount of power provided to one or more loads of a group of loads by a backup power source having an output circuit breaker, the apparatus including:

a) an electronic processor circuit including a processor executing a program, a parameter memory storing the maximum output power parameter for the small backup power system power source and at least one first load parameter for a first load, the maximum output power parameter being a manufacturer specified continuous amount of power which will cause an overload but is less than the amount of continuous power which will trip a circuit breaker protecting the small backup power source from an overload;

b) a communications link providing a timely power output parameter for the small backup power system power source to the electronic processor circuit;

c) the electronic processor circuit communicating via a communications link with the first load in response to the maximum output power parameter, the timely power output parameter and the first load parameter thereby adjusting the amount of current while it is being consumed by the first load to prevent overloading the small backup power system power source with an amount of current in excess of the maximum output power.

4. An apparatus for providing power to one or more loads of a group of loads, the apparatus including:

a) a small backup power system power source having an output circuit breaker and a manufacturer specified maximum output power parameter which is an amount less than what will trip the output circuit breaker, the power source operating to provide power via the circuit breaker to at least a first load and a second load of the group of loads with the second load being a controllable load which is connected to the small backup power system power source by a switch or relay;

b) an electronic processor circuit including a processor executing a program, a parameter memory storing the maximum output power parameter, a first load parameter for the first load and a second load parameter for the second load;

c) a communications link providing a timely power output parameter for the small backup power system power source to the electronic processor circuit;

d) the electronic processor circuit communicating via a communications link, which may be the same or different than the communications link of c), with a load limit circuit responsive to the maximum output power parameter, the timely power output parameter, the first load parameter and operating to adjust the amount of current being consumed by the first load to an amount the small backup power system power source is capable of providing without exceeding the maximum output power parameter;

e) the electronic processor circuit communicating via a communications link, which may be the same or different than the communications links of c) and d), with the second load in response to the maximum output power parameter, the timely power output parameter, the first load parameter and operating before the second load is connected to adjust and thereby prevent the power consumed by the second load from overloading the small backup power source when the second load is initially connected.

5. The apparatus of claim **1**, **2**, **3** or **4** wherein the electronic processor circuit of c) communicates with and receives the timely power output parameter from the power source, the parameter indicating the amount of electrical current being produced by the power source.

6. The apparatus of claim **1**, **2**, **3** or **4** further including a transfer switch having an output, a first input coupled to the small backup power source, a second input coupled to a power grid, the transfer switch operating to select the power grid or the power source to output power to at least the first load and wherein the electronic processor circuit of c) communicates with and receives the timely power output parameter from an electrical current sensor circuit which

senses the current provided from the transfer switch output, the parameter indicating the amount of electrical current being produced by the power source when the power source is selected and to indicate the amount of electrical current being provided by the power grid when the power grid is selected, and wherein the electrical current sensor circuit includes a current sensing element chosen from the group consisting of: coil, inductor, transformer, integrated circuit and Rogowski coils.

7. The apparatus of claim **1**, **2**, **3** or **4** wherein the first load parameter is the average power drawn by the first load and is determined and stored in response to the timely power output parameter.

8. The apparatus of claim **1**, **2**, **3** or **4** wherein the power source of element a) is a backup power source made available to provide power only during failure of a primary power source.

9. The apparatus of claim **1**, **2**, **3**, or **4** wherein the power source of element a) is made available to provide additional power during the availability of power from a primary power source.

10. The apparatus of claim **1**, **2**, **3** or **4** wherein the power source of element a) is made available to provide power via a transfer switch when power from an electrical power grid fails to meet specifications as determined by the transfer switch, the apparatus further comprising a load monitor circuit connected to measure power provided at the output of the transfer switch and provide the timely power output parameter when the power source of element a) provides power and to provide a timely grid power parameter when the power grid is providing power.

11. The apparatus of claim **1**, **2**, **3** or **4** including a transfer switch to connect to a power grid primary power source service connection, the parameter memory of element b) stores power grid quality specification parameters, the electronic processor circuit of element c) receives timely power parameters for power provided from the service connection and the electronic processor circuit responds to the timely power parameters and the stored power grid specification parameters before connecting the first load to the primary power source.

12. An apparatus for controlling power provided from a plurality of power sources to a group of loads, the apparatus including:

a) a transfer switch which is controllable to select a power grid service circuit or a generator to power various loads of a group of loads, the power grid service circuit and said generator each having a maximum output current capability;

b) a processor circuit programmed to control the transfer switch and the generator to power a group of loads from the power grid when the power grid operates at an acceptable voltage and to cause one or more loads of the group of loads to be powered by the generator when the power grid does not operate at the acceptable voltage;

c) the processor circuit being programmed to timely monitor the current provided to less than all of the one or more loads of the group of loads by the generator and to communicate with an associated load limiter circuit to control the amount of current which will be consumed by a given load of the one or more loads of the group of loads so as to prevent exceeding the manufacturer specified maximum current capacity of the generator.

13. An apparatus for controlling power provided from a plurality of power sources to a group of loads, the apparatus including:

a) a transfer switch which is controllable to select a power grid service circuit or a generator to power various loads of a group of loads, the power grid service circuit and the generator each having a maximum output current capability;

b) a processor circuit programmed to control the transfer switch and the generator to power the group of loads from the power grid when the power grid operates at an acceptable voltage and to cause one or more loads of the group of loads to be powered by the generator when the power grid does not operate at the acceptable voltage;

c) the processor circuit being programmed to timely monitor the current provided to the one or more loads of the group of loads when they are powered by the generator and to timely monitor the group of loads when they are powered by the power grid operating in advance and when necessary to communicate with one or more loads or corresponding load modules of the group of loads to control the current consumed thereby to prevent exceeding the maximum output current capacity of the power source selected by the transfer switch.

14. An apparatus for controlling power provided from three power sources to a group of loads, the apparatus including:

a) a transfer switch which is controllable to select a power grid service circuit or a generator to provide power to various loads of a group of loads or to connect neither leaving a third power source to power one or more loads of the group of loads, with the power grid service circuit, the generator and the third power source each having a maximum output current capability;

b) a processor circuit programmed to control the transfer switch and the generator to disconnect the group of loads from the power grid service circuit when the power grid fails and to connect the generator to one or more loads of the group of loads when the power grid fails and current consumed by the group of loads is more than the maximum output current capability of the third power source;

c) the processor circuit programmed to timely monitor and control the current consumed by the group of loads and to control the transfer switch and the generator to prevent exceeding the maximum current capacity of the third power source and the generator.

15. An apparatus for controlling power provided from three power sources to a group of loads, the apparatus including:

a) a transfer switch which is controllable to select a power grid service circuit or a generator to provide power to various loads of a group of loads or to connect neither leaving a third power source to power the group of loads, with the power grid service circuit, the generator and the third power source each having a maximum output current capability;

b) a processor circuit programmed to control the transfer switch and the generator to disconnect the generator and the power grid service circuit when the current consumed by the group of loads is less than the maximum output current capability of the third power source;

c) the processor circuit programmed to timely monitor the current provided by the third power source to the group

of loads to control the current which will be consumed by the group of loads and to control the transfer switch and the generator to prevent exceeding the maximum current capacity of the third power source.

16. The apparatus as claimed in claim **12**, **13**, **14** or **15** wherein in element c) the processor circuit is programmed to control the amount of current consumed by a given load by limiting the current provided thereto to a maximum amount.

17. The apparatus as claimed in claim **12**, **13**, **14** or **15** wherein in element c) the processor circuit is programmed to control the amount of current consumed by a given load by controlling the given load to change the amount of current it consumes.

18. The apparatus as claimed in claim **12**, **13**, **14** or **15** wherein in element c) the processor circuit is programmed to connect a given load to one of the power sources when both are available and before making the connection calculates from a plurality of load parameters including a previously measured load current whether the given load can be connected to that power source without causing an overload wherein the previously load current measurement was responsive to the change in total current output of the one the power source when the given load was turned on.

19. The apparatus as claimed in claim **12**, **13**, **14** or **15** wherein in element c) the processor circuit is programmed to connect a given load to one of the power sources and before making the connection determines from actual measurement of current drawn by the given load during a previous connection, the amount of current which will be consumed by the given load at the time of connection and determines the amount of current that can be provided by that power source without causing overload wherein the actual measurement of current was responsive to the change in total current output from the one power source when the given load was turned on.

20. The apparatus as claimed in claim **12**, **13**, **14** or **15** wherein in element c) the processor circuit is programmed to connect a given load having a constant current consumption throughout the duration of connection to one power source and before making the connection determines the amount of current previously consumed by the given load and determines the amount of current that can be provided by the one power source without causing overload for the expected duration of time of the connection.

21. The apparatus as claimed in claim **12**, **13**, **14** or **15** wherein in element c) the processor circuit is programmed to connect a given load to one power source, the given load having a variable current consumption from the time of connection until a steady operating current is reached and before making the connection the processor circuit recalls from a parameter memory the amount of current and the length of time that variable current is needed to connect the given load and determines the amount of current that can be provided by the power source without causing overload for the time from the connection until the given load reaches a steady operating current.

22. The apparatus as claimed in claim **12**, **13**, **14** or **15** wherein in element c) the processor circuit is programmed to also monitor the current consumed by a given connected load to ensure the power source is not overloaded by increased current consumption by that given load.

23. The apparatus as claimed in claim **12**, **13**, **14** or **15** wherein in element a) the generator is powered by internal combustion and in c) the processor circuit is programmed to use timely environmental parameters to determine the maximum output current capability for the generator.

24. The apparatus as claimed in claim **12**, **13**, **14** or **15** wherein in element a) the generator is powered by internal combustion and in c) the processor circuit is programmed to monitor and use changing timely environmental parameters to estimate the upcoming maximum output current capability for the generator.

25. The apparatus as claimed in claim **12**, **13**, **14** or **15** wherein in element c) the processor circuit is programmed to use timely environmental parameters to determine the current power consumption for a given load.

26. The apparatus as claimed in claim **12**, **13**, **14** or **15** wherein in element c) the processor circuit is programmed to monitor and use changing timely environmental parameters to estimate the upcoming power consumption for a given load.

27. The apparatus as claimed in claim **12**, **13**, **14** or **15** wherein the processor circuit is programmed to monitor the frequency of power provided by the generator to detect an overload in response to the power frequency dropping below a known amount and disconnect one or more loads.

28. The apparatus as claimed in claim **12**, **13**, **14** or **15** wherein in element c) the processor circuit is programmed to respond to a user's inputs when the processor circuit automatically chooses to connect a given load.

29. The apparatus as claimed in claim **12**, **13**, **14** or **15** wherein the processor circuit is programmed to monitor the frequency of power provided by the generator to detect an overload in response to the power frequency being below a known amount for a known time and disconnect one or more low priority loads to remove the overload in order to power other permanently and controllably connected loads.

30. The apparatus as claimed in claim **12**, **13**, **14** or **15** wherein in element c) the processor circuit is programmed to respond to a user's inputs to determine if a given load may be connected without overloading the generator and to provide feedback to the user if the generator has insufficient available power to connect the load without an overload.

31. The apparatus as claimed in claim **12**, **13**, **14** or **15** wherein in element c) the processor circuit is programmed to respond to a user's inputs to determine if a given load may be connected without overloading the generator and to provide feedback to the user if said generator has insufficient available power to connect the load without an overload, which feedback includes a request for further user input.

32. The apparatus as claimed in claim **12**, **13**, **14** or **15** wherein in element c) the processor circuit is programmed to respond to a user's inputs to determine if a given load may be connected without overloading the generator and to provide feedback to the user if the generator has insufficient available power to connect the load without an overload, which feedback includes a request for further user input to choose a load which may be disconnected thereby providing sufficient generator power to allow connection of the given load.

33. The apparatus as claimed in claim **12**, **13**, **14** or **15** wherein in element c) the processor circuit is programmed to disconnect a given load having a high starting current for a time period and after disconnect to not connect the given load again until the time period has elapsed.

34. The apparatus as claimed in claim **14** or **15** wherein in element c) the processor circuit is programmed to prevent a damaging amount of current from flowing into the generator.

35. The apparatus as claimed in claim **14** or **15** wherein in element c) the processor circuit is programmed to prevent a damaging amount of current from flowing into the generator

by increasing the current consumed by a connected load or connecting one or more additional loads to the third power source.

36. The apparatus as claimed in claim **14** or **15** wherein in element c) the processor circuit is programmed to prevent a damaging amount of current from flowing into the generator by controlling the transfer switch to disconnect the generator.

37. An apparatus for controlling power provided from a plurality of power sources to a group of loads, the apparatus including:

a) a small backup power system transfer switch which is controllable to select a power grid service circuit or a DC to AC inverter to power a group of loads, the DC to AC inverter being powered by a battery with the battery being charged by a battery charger, the power grid service circuit and the DC to AC inverter each having a maximum output current capability;

b) a processor circuit being programmed to control the transfer switch and the DC to AC inverter to power one or more loads of the group of loads including the battery charger from the power grid when the power grid operates at an acceptable voltage and to cause the one or more loads of the group of loads but not the battery charger to be powered by the DC to AC inverter when the power grid does not operate at the acceptable voltage;

c) the processor circuit being programmed to timely monitor the current provided to the loads by said DC to AC inverter and to prevent exceeding the maximum current capacity of the DC to AC inverter.

38. The apparatus as claimed in claim **37** wherein the processor circuit being programmed in element c also operates to prevent exceeding the maximum current capacity of the power grid service circuit.

39. The apparatus as claimed in claim **37** or **38** further including a generator communicating with the processor circuit and operable to charge the battery when the battery charger is not available to charge the battery.

40. The apparatus as claimed in claim **37** or **38** wherein the battery is contained in and provides propulsion power for an electric vehicle with the battery communicating with the processor circuit so that the processor circuit monitors the charge on the battery.

41. The apparatus as claimed in claim **37** or **38** wherein the battery and the battery charger are contained in an electric vehicle and the battery provides propulsion power for the electric vehicle with the battery charger communicating with the processor circuit so that the processor circuit monitors the charge on the battery and controls the current consumed by the battery charger.

42. The apparatus as claimed in claim **37** or **38** wherein the battery is contained in and provides propulsion power for an electric vehicle, the vehicle further including a generator operable to charge the battery when the battery charger is not available to charge the battery.

43. The apparatus as claimed in claim **37** or **38** wherein the battery and the battery charger are contained in an electric vehicle and the battery provides propulsion power for the electric vehicle with the battery charger communicating with the processor circuit so that the processor circuit monitors the charge on the battery and controls the current consumed by the battery charger, the vehicle further including a generator operable to charge the battery when the battery charger is not available to charge the battery.

44. An apparatus for selecting power provided from one of a plurality of power sources to a group of loads, the apparatus including:

a) in a small backup power system, a transfer switch having two inputs and an output and connected to receive electrical grid power from a power grid at the first input and connected to receive electrical backup power from a backup power source at the second input the transfer switch having an output normally providing grid power to a group of loads and when the grid power is not of suitable quality or not present the transfer switch output provides the backup power to a plurality of backup loads of the group of loads;

b) a current sensor circuit coupled to the transfer switch output to provide a measure of output current from the transfer switch including output grid power when grid power is selected and the backup current output from the backup power source when it is selected to provide backup power to the backup loads;

c) a load control circuit responsive to the measure of the backup current, the load control circuit including stored load priorities for a plurality of the backup loads, the load control further including a stored parameter selected from the group of;

i) a known parameter which is the backup power source manufacturer's specified maximum short term output current,

ii) a known parameter which is the backup power source manufacturer's specified maximum long term output power,

iii) a known maximum current parameter for one or more individual backup loads, determined for the corresponding load in response to the current sensor circuit,

iv) a known running current parameter for one or more individual backup loads, determined for the corresponding load in response to the current sensor circuit,

the load control circuit including a processor programmed to perform calculation and decision making operations in response to the stored load priorities, the stored parameter and the backup current to prevent overloading the backup power source by determining in advance if a load can be connected without an overload and if so connecting the load using at least one of;

1) a load switch for switching current supplied to an individual load on and off,

2) a load limiter circuit configured to limit the current supplied to an individual load including to one or more discrete levels including a level greater than zero and less than the maximum amount of current the load would otherwise draw,

3) a load limiter circuit configured to limit the current supplied to an individual load including to a continuously adjustable amount greater than zero and less than the maximum amount of current the load would otherwise draw,

4) a communications link communicating with a controllable load to cause the controllable load to reduce the current drawn thereby including to an amount greater than zero and less than the maximum current the controllable load would otherwise draw.

45. The apparatus as claimed in claim **44** wherein in c) the load control includes and responds to a plurality of stored parameters selected from the group.

46. The apparatus as claimed in claim **44** wherein in c) the load control includes and responds to three stored parameters selected from the group.

47. The apparatus as claimed in claim **44** wherein in c) the load control includes and responds to all of the stored parameters in the group.

48. The apparatus as claimed in claim **44** wherein the stored parameter automatically changes from time to time.

49. The apparatus as claimed in claim **44** wherein at least one of the load priority parameters automatically changes from time to time.

50. The apparatus as claimed in claim **44** wherein the load control circuit includes a real time clock circuit providing time of day data wherein at least one of the load priority parameters automatically changes in response to the time of day data.

51. The apparatus as claimed in claim **44** wherein the load control circuit includes a real time clock and calendar circuit wherein at least one of the load priority parameters automatically changes in response to the calendar of the real time clock and calendar circuit.

52. The apparatus as claimed in claim **44** wherein the backup power source includes an internal temperature sensor with the load control circuit operating to prevent overloading the backup power source in response to the internal temperature sensor.

53. The apparatus as claimed in claim **44** wherein the backup power source includes an ambient temperature sensor with the load control circuit operating to prevent overloading the backup power source in response to the ambient temperature sensor.

54. The apparatus as claimed in claim **44** wherein in c) the load control circuit is responsive to the current and voltage of the power output from the transfer switch to determine the apparent power output, which may be expressed in units of volt-amperes or VA.

55. The apparatus as claimed in claim **44** wherein in c) the load control circuit includes the stored parameter ii) which is the manufacturer's specified maximum long term power output capability adjusted as specified by the manufacturer in response to one or more environmental parameter.

56. The apparatus as claimed in claim **44** wherein the current sensor circuit of b) includes a current transformer which is physically located to sense current flowing through a hot conductor which is part of the transfer switch output circuitry.

57. The apparatus as claimed in claim **44** wherein the current sensor circuit of b) includes a plurality of current transformers each of which is physically located to sense current flowing through a hot conductor which is part of the transfer switch output circuitry, thereby allowing the current sensor circuit to measure current provided from the power grid or the backup power source as selected by the transfer switch.

58. The apparatus as claimed in claim **44** wherein the current sensor circuit of b) includes a plurality of current transformers each of which is physically configured and located such that a hot conductor of the transfer switch output physically passes through the current transformer thereby allowing the current sensor circuit to measure current provided through that hot conductor from the power grid and the backup power source as selected by the transfer switch, and further including a voltage measuring circuit to measure the corresponding voltage of the power flowing through the respective hot conductor with the processor responsive thereto to compute the V/A of the power flowing through each current transformer and thereby compute the total power flowing from the transfer switch output.

59. The apparatus as claimed in claim **44** wherein the current sensor circuit of b) includes a plurality of current transformers each of which is physically configured and physical located in proximity to the transfer switch output such that each hot output conductor physically passes through a current transformer allowing the current sensor circuit to measure the transfer switch output current provided from the power grid or the backup power source as selected by the transfer switch, the load control circuit further operating in response to the transfer switch output current to determine the load current for the given load when the transfer switch supplies grid power thereto to determine and store in memory as iii) a peak maximum power parameter and iv) an average running power parameter for the given load.

60. The apparatus as claimed in claim **44** wherein the backup power source is an internal combustion engine powered generator and the load control circuit operates to monitor the generator output power and in response thereto adds or removes loads to prevent generator overload while powering controllable loads and further responds to generator output power frequency to cure a generator overload if one occurs.

61. The apparatus as claimed in claim **44** wherein the backup power source is an internal combustion engine powered generator and the load control circuit adds or removes loads to prevent overloads while powering controlled loads and additionally removes one or more loads in response to an overload detected when the frequency of the backup power drops below a known amount.

62. The apparatus as claimed in claim **44** wherein the backup power source is an internal combustion engine powered generator and the load control circuit adds or removes loads to prevent overloads while powering controlled loads and additionally removes one or more loads in response to an overload detected when the frequency of the backup power drops below a known amount for a known length of time.

* * * * *