SMART MANAGEMENT MODULES

50A Smart Management Module
Model #: 7000
UPC: 696471070002

100A Smart Management Module
Model #: 7006
UPC: 696471077520

Generac's Smart Management Modules (SMMs) allow PWRcell™ to make the most of its leading backup power and capacity by helping to manage power usage and to prevent overload. A PWRcell system can be augmented with up to eight individual Smart Management Modules. SMMs do not require additional control devices for operation.

SMMs function by monitoring inverter power frequency (Hz). When loads demand more power than the inverter can produce, the PWRcell inverter will change frequency, signaling SMMs to shed loads and allow the inverter to recover.

The modules can be set to a load priority between 1-8 or be set in a lock-out mode for loads that do not need to run in an outage.

FEATURES & BENEFITS

- Integrate into a PWRcell solar + storage system for automatic power management
- Type 3R enclosure for indoor or outdoor installation
- Lock-out feature prevents loads from operating when system is operating under backup power
- Intelligently manage up to 12 loads when used in conjunction with the PWRcell Automatic Transfer Switch

*It is recommended to size the system with appropriate excess capacity to allow starting of the largest managed loads (i.e. loads with highest starting currents). Each managed load of the PWRcell Automatic Transfer Switch and SMM must be assigned a unique priority setting, so no two managed loads attempt to start simultaneously.

GENERAC 1044
Generac v. PSLC
IPR2026-00024

Specifications

SPECIFICATIONS	50 AMP (G0070000)	100 AMP (G0070060)
POWER SUPPLY SOURCE	240 VAC (FROM LINE INPUT)	240 VAC (FROM LINE INPUT)
CONTACTOR VOLTAGES	220/240 VAC	220/240 VAC
RESISTIVE AMPS	50	100
FOR COMPLETE PRODUCT SPECIFICATIONS, REFER TO EACH INDIVIDUAL MODULE'S SPEC SHEET		

DIMENSIONS		50 AMP (G0070000)	100 AMP (G0070060)
HEIGHT (IN/MM)	H1	6.17 / 156.8	7.0 / 178.5
	H2	2.36 / 60	2.4 / 61
WIDTH (IN/MM)	W1	7.06 / 179.4	11.39 / 289.4
	W2	4.72 / 120	7.8 / 200
DEPTH (IN/MM)		3.7 / 94	5.3 / 136.9
WEIGHT (LBS/KG)		2.06 / 0.94	5.3 / 2.4

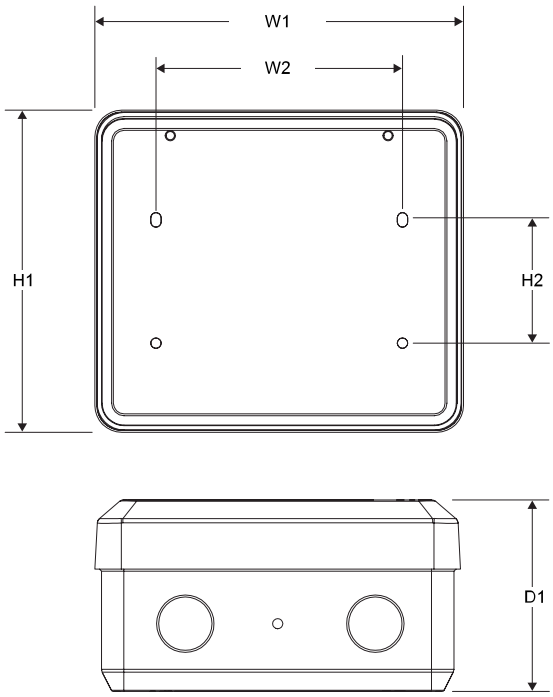

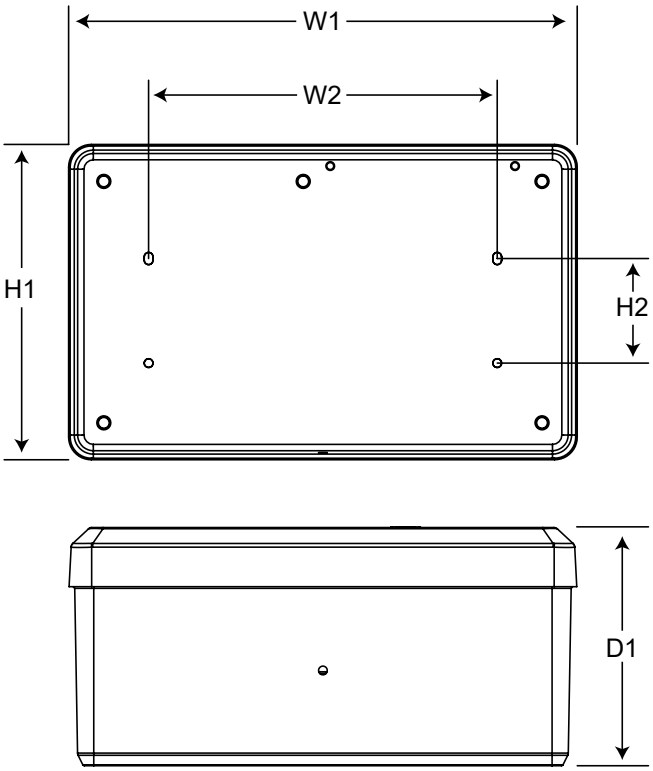

Generac Power Systems, Inc.
S45 W29290 Hwy. 59, Waukesha, WI 53189

www.Generac.com | 888-GENERAC (436-3722)

A0000953961 REV A

©2020 Generac Power Systems. All rights reserved.
Specifications are subject to change without notice.