US011108265B2

(12) **United States Patent**
**Pancheri et al.**

(10) **Patent No.: US 11,108,265 B2**
(45) **Date of Patent: Aug. 31, 2021**

(54) **LOAD SHED SYSTEM**

(71) Applicant: **Generac Power Systems, Inc.**, Waukesha, WI (US)

(72) Inventors: **Brendan Pancheri**, Milwaukee, WI (US); **Greg Wischstadt**, Wales, WI (US); **Robert Iles**, Delafield, WI (US); **Andy Phillips**, Wind Lake, WI (US); **Taesik Yu**, Hwaseong-si (KR); **Sungmin Lee**, Chungcheongnam-do (KR)

(73) Assignee: **Generac Power Systems, Inc.**, Waukesha, WI (US)

( * ) Notice: Subject to any disclaimer, the term of this patent is extended or adjusted under 35 U.S.C. 154(b) by 0 days.

(21) Appl. No.: **16/744,601**

(22) Filed: **Jan. 16, 2020**

(65) **Prior Publication Data**

US 2020/0227938 A1 Jul. 16, 2020

**Related U.S. Application Data**

(60) Continuation of application No. 15/608,046, filed on May 30, 2017, now Pat. No. 10,554,074, which is a

(Continued)

(51) **Int. Cl.**
***H02J 9/06*** (2006.01)
***H02J 3/14*** (2006.01)

(Continued)

(52) **U.S. Cl.**
CPC ..... ***H02J 9/061*** (2013.01); ***G01R 11/04*** (2013.01); ***G01R 11/06*** (2013.01); ***H02J 3/14*** (2013.01);

(Continued)

(58) **Field of Classification Search**
CPC .... Y04S 20/222; Y04S 20/242; Y04S 20/248; H02J 3/14; H02J 9/061; H02J 2310/12;

(Continued)

(56) **References Cited**

U.S. PATENT DOCUMENTS

4,324,987 A 4/1982 Sullivan, II et al.
4,357,665 A 11/1982 Korff

(Continued)

OTHER PUBLICATIONS

Generac 50A Power Management Module, Owner's/Installation Manual Power Management Module (PMM) and Starter Kit, 14 pages, dated Feb. 20, 2013.

*Primary Examiner* — Jared Fureman
*Assistant Examiner* — Esayas G Yeshaw
(74) *Attorney, Agent, or Firm* — Merchant & Gould P.C.

(57) **ABSTRACT**

A load shed module configured to be connected in series between a power supply and a load is disclosed. A separate load shed module is connected in series between each load and the power supply. The load shed module determines the frequency of the voltage supplied from the power supply. Based on the frequency, the load shed module determines if utility power is connected or if a generator is connected. If the generator is connected and the frequency of the voltage goes outside of a desired operating range for a preset time, the load shed module disconnects the load from the power supply. Each load shed module includes a priority setting and reconnects its corresponding load after a predetermined time corresponding to the priority setting.

**18 Claims, 2 Drawing Sheets**

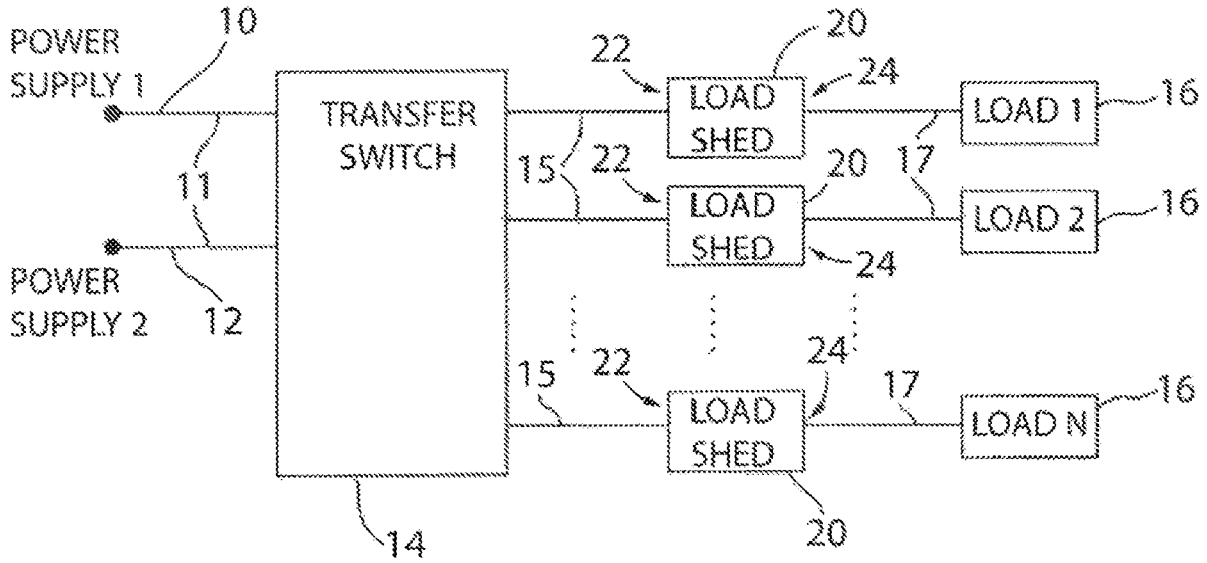




GENERAC 1047
Generac v. PSLC
IPR2026-00024

**Related U.S. Application Data**

division of application No. 14/593,058, filed on Jan. 9, 2015, now Pat. No. 10,069,331.

(51) **Int. Cl.**
***G01R 11/04*** (2006.01)
***G01R 11/06*** (2006.01)

(52) **U.S. Cl.**
CPC ..... *H02J 2310/14* (2020.01); *Y02B 70/30* (2013.01); *Y02B 70/3225* (2013.01); *Y04S 20/222* (2013.01); *Y04S 20/248* (2013.01)

(58) **Field of Classification Search**
CPC .. H02J 2310/14; Y02B 70/3225; Y02B 70/30; G01R 11/06; G01R 11/04
See application file for complete search history.

(56) **References Cited**

U.S. PATENT DOCUMENTS

5,462,225 A 10/1995 Massara et al.
6,172,432 B1 * 1/2001 Schnackenberg ..... H02J 3/14 307/23
6,624,532 B1 9/2003 Davidow et al.
6,631,310 B1 10/2003 Leslie
6,671,586 B2 * 12/2003 Davis ..... H02J 13/00017 700/295
6,747,368 B2 6/2004 Jarrett
6,832,135 B2 12/2004 Ying
6,891,478 B2 5/2005 Gardner
7,132,951 B2 11/2006 Ziejewski et al.
7,460,930 B1 12/2008 Howell et al.
7,528,503 B2 5/2009 Rognil et al.
8,135,499 B2 3/2012 Haugh
8,248,203 B2 8/2012 Hanwright et al.
8,260,471 B2 9/2012 Starch et al.
8,324,755 B2 12/2012 Stair et al.
8,369,998 B2 2/2013 Drake et al.
8,373,569 B2 2/2013 Glipatrick
8,410,633 B2 4/2013 Batzler et al.
8,417,393 B2 4/2013 Drake et al.
8,433,452 B2 4/2013 Fleck et al.
10,698,433 B2 * 6/2020 Baba ..... H02M 3/04
2003/0075982 A1 4/2003 Seefeldt
2004/0075343 A1 4/2004 Wareham et al.
2006/0028069 A1 * 2/2006 Loucks ..... H02J 3/005 307/130
2009/0240377 A1 9/2009 Batzler et al.
2010/0019574 A1 1/2010 Baldassarre et al.
2010/0114387 A1 5/2010 Chassin
2011/0054707 A1 3/2011 Batzler et al.
2011/0254370 A1 10/2011 Wischstadt et al.
2012/0029717 A1 2/2012 Cox et al.
2012/0049638 A1 3/2012 Dorn et al.
2012/0053739 A1 3/2012 Brian et al.
2012/0074780 A1 3/2012 Fleck
2012/0104848 A1 5/2012 Lathrop et al.
2012/0109395 A1 5/2012 Finch et al.
2012/0175955 A1 7/2012 Carralero et al.
2012/0205986 A1 8/2012 Frampton et al.
2013/0026840 A1 1/2013 Arditi et al.
2013/0035887 A1 2/2013 Fan
2013/0270908 A1 10/2013 Wedel et al.
2014/0111006 A1 * 4/2014 Baldassarre ..... H02J 9/06 307/23

* cited by examiner

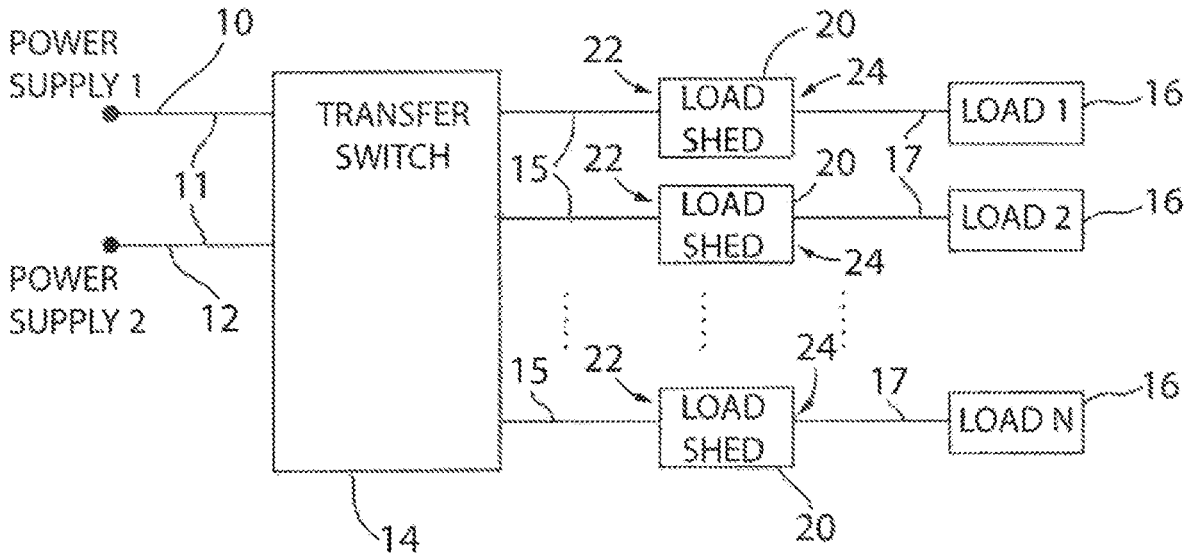
POWER SUPPLY 1
10
11
POWER SUPPLY 2
12
TRANSFER SWITCH
14
15
22
LOAD SHED
20
24
LOAD 1
16
17
LOAD 2
LOAD N

FIG. 1

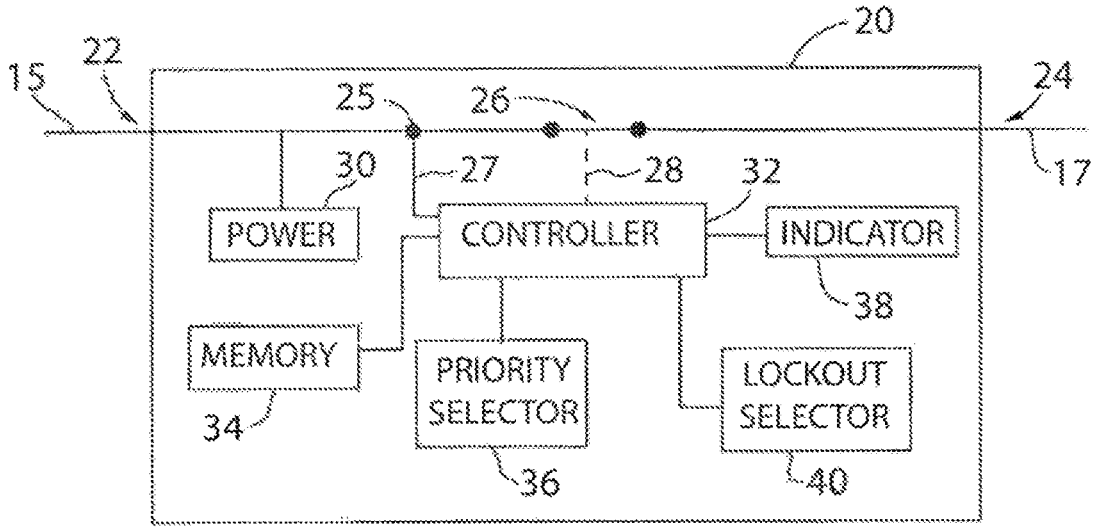
15
22
20
24
17
25
26
27
28
30
32
POWER
CONTROLLER
INDICATOR
38
MEMORY
34
PRIORITY SELECTOR
36
LOCKOUT SELECTOR
40

FIG. 2

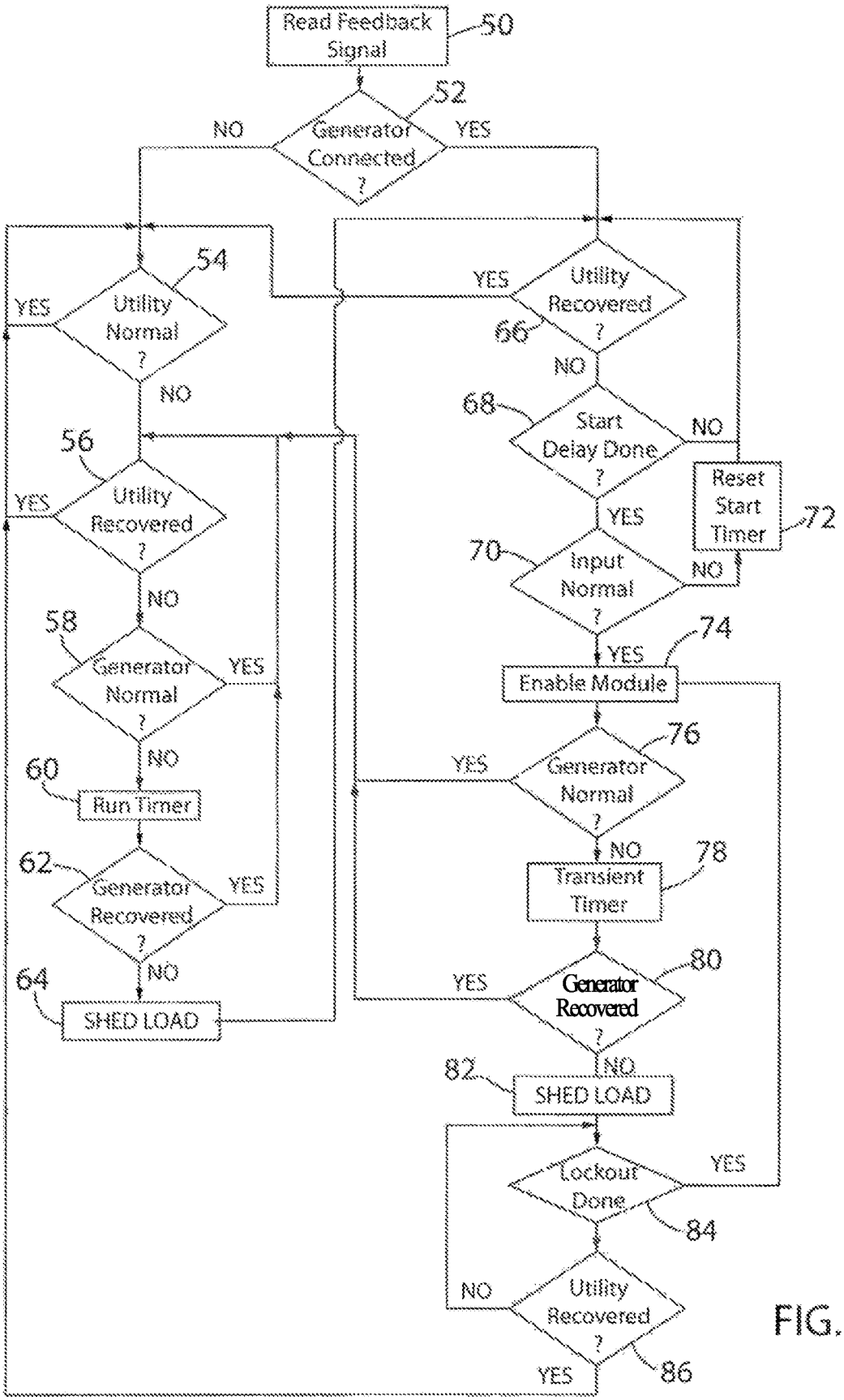
Read Feedback Signal
50
Generator Connected ?
52
NO
YES
Utility Normal ?
54
YES
NO
Utility Recovered ?
56
YES
NO
Generator Normal ?
58
YES
NO
Run Timer
60
Generator Recovered ?
62
YES
NO
SHED LOAD
64
Utility Recovered ?
66
YES
NO
Start Delay Done ?
68
NO
YES
Reset Start Timer
72
Input Normal ?
70
NO
YES
Enable Module
74
Generator Normal ?
76
YES
NO
Transient Timer
78
Generator Recovered ?
80
YES
NO
SHED LOAD
82
Lockout Done
84
YES
Utility Recovered ?
86
NO
YES

FIG. 3

# LOAD SHED SYSTEM

## CROSS-REFERENCE TO RELATED APPLICATION

This application is a continuation of U.S. Ser. No. 15/608,046, filed May 30, 2017, which is a divisional of U.S. Ser. No. 14/593,058, filed Jan. 9, 2015, now U.S. Pat. No. 10,069,331, issued Sep. 4, 2018.

## FIELD OF THE INVENTION

The subject matter disclosed herein relates generally to a load shed module and, in particular, to an independent load shed module which can be connected to each load line and which requires no signal wires connected between modules or to a transfer switch.

## BACKGROUND AND SUMMARY OF THE INVENTION

Electrical generators are used in a wide variety of applications. Typically, an individual electrical generator operates in a stand-by mode wherein the electrical power provided by a utility is monitored such that if the commercial electrical power from the utility fails, the engine of the electrical generator is automatically started causing the alternator to generate electrical power. When the electrical power generated by the alternator reaches a predetermined voltage and frequency desired by the customer, a transfer switch transfers the load imposed by the customer from the commercial power lines to the electrical generator. As is known, most residential electric equipment in the U.S. is designed to be used in connection with electrical power having a fixed frequency, namely, sixty (60) hertz (Hz).

Typically, electrical generators utilize a single driving engine coupled to a generator or alternator through a common shaft. Upon actuation of the engine, the crankshaft rotates the common shaft so as to drive the alternator that, in turn, generates electrical power. The frequency of the output power of most prior electrical generators depends on a fixed, operating speed of the engine. Typically, the predetermined operating speed of an engine for a two-pole, stand-by electrical generator is approximately 3600 revolutions per minute to produce the rated frequency and power for which the unit is designed.

The output power of a generator is, however, load dependent. As the electrical load on the generator increases, the frequency of the electricity output may decrease. Further, a sudden, significant change in load can cause the generator speed to drop several hertz, for example. If the generator has sufficient capacity to power the additional load, the generator controller regulates the speed and brings the output frequency back to the desired output frequency. If, however, the additional load exceeds the capacity of the generator, the generator may stall, resulting in none of the loads receiving power. For example, a generator may be running and providing power to lights and a television in one room. A sump pump, furnace, or another electrical load may be switched on, creating an additional power demand on the generator. The additional load may cause the engine to begin to slow and/or to stall.

Historically, it has been known to provide a load shed module which may be connected to the output of a transfer switch. The load shed module, therefore, receives power from the generator as an input. One or more sensors are utilized within the load shed module to monitor operation of



the generator. Optionally, the load shed module may receive one or more signals from the generator as inputs providing an indication of the operation of the generator. The signals may indicate, for example, that the generator is providing power to the loads rather than utility power or that the generator is overloaded. The load shed module also includes a number of switches or contactors to connect load circuits to the generator. A central controller receives the signals from the sensors monitoring operation of the generator or the signals from the generator to determine whether the load circuits may be connected to the generator. If the generator begins to stall, the load shed module may disconnect a portion, or all, of the loads according to the load management routines programmed into the load shed module. However, such a load shed module requires a central controller interconnected with each of the switches. Further, installation of the load shed module requires routing the electrical conductors from all of the loads to the load shed module. Each load typically includes a hot conductor and a neutral conductor and may further include a ground conductor. Each of the electrical conductors must then be properly connected within the load shed module. Depending on the arrangement of the load shed module, only the hot conductors may be switched or both the hot and neutral conductors may be switched. Further, each load must be connected to the appropriate switch designated for that load. The varying potential configurations and multiple conductors from each of the loads increase the potential for a wiring error to occur during installation of the load shed module.

Therefore, it is a feature of the present invention to provide a load shed module with reduced installation complexity.

According to one embodiment of the invention, a load shed module is configured to be connected in series between a power source and a load. The load shed module includes an input configured to receive a first electrical connection from the power source, an output configured to provide a second electrical connection for the load, and a switch operatively connected in series between the input and the output. The switch receives a control signal to selectively open and close the switch. A sensor is configured to generate a feedback signal corresponding to an alternating current (AC) voltage present at the input, and a priority selector is operable to generate a priority signal for the load shed module. A controller is connected to the sensor to receive the feedback signal, to the priority selector to receive the priority signal, and to the switch to supply the control signal. The controller is operable to determine whether the power source is a utility power source or an alternate power source as a function of the feedback signal, compare the feedback signal to a threshold when the power source is the alternate power source, generate the control signal to open the switch when the feedback signal exceeds the threshold for a first predetermined time, and generate the control signal to close the switch when the power source is the alternate power source and when a second predetermined time has passed, where the second predetermined time is selected as a function of the priority signal.

According to another aspect of the invention, the controller is further operable to determine a frequency of the AC voltage present at the input from the feedback signal and determine whether the power source is the utility power source or the alternate power source as a function of the frequency of the AC voltage. The controller may store a minimum and maximum frequency of the AC voltage and determine a difference between the minimum and maximum frequencies. The threshold to open the switch may be a

maximum difference between the minimum frequency and the maximum frequency. Optionally, the controller may determine a difference between the frequency of the AC voltage present at the input and an expected frequency of the AC voltage present at the input. The threshold may be a maximum difference between the frequency of the AC voltage present at the input and the expected frequency of the AC voltage present at the input.

According to yet another aspect of the invention, the controller may be configured to operate in a first operating mode and in a second operating mode. During the first operating mode, the controller generates the control signal to open the switch when the feedback signal exceeds the threshold for the first predetermined time. During the second operating mode, the controller generates the control signal to open the switch when the feedback signal exceeds the threshold for a third predetermined time, and the third predetermined time is less than the first predetermined time. The controller may also enter a lock out operating mode when the feedback signal exceeds the threshold for the third predetermined time.

According to another embodiment of the invention, a method of connecting a load to a power source in a power distribution system is disclosed. A feedback signal, corresponding to a voltage received at an input of a load shed module from the power source, is read. A frequency of the voltage is determined from the feedback signal with a controller in the load shed module and compared to a threshold frequency. A control signal is generated with the controller to open a switch connected in series between the input and an output of the load shed module when the frequency of the voltage at the input is outside of the threshold frequency for a first predetermined time. A priority level of the load shed module is determined and the control signal is generated with the controller to close the switch connected in series between the input and the output of the load shed module after a second predetermined time when the frequency of the voltage is within the threshold frequency, where the second predetermined time is a function of the priority level of the load shed module.

These and other objects, advantages, and features of the invention will become apparent to those skilled in the art from the detailed description and the accompanying drawings. It should be understood, however, that the detailed description and accompanying drawings, while indicating preferred embodiments of the present invention, are given by way of illustration and not of limitation. Many changes and modifications may be made within the scope of the present invention without departing from the spirit thereof, and the invention includes all such modifications.

## BRIEF DESCRIPTION OF THE DRAWINGS

The drawings furnished herewith illustrate a preferred construction of the present invention in which the above advantages and features are clearly disclosed as well as others which will be readily understood from the following description of the illustrated embodiment.

In the drawings:

FIG. **1** is a block diagram representation of an exemplary power distribution system incorporating a load shed module according to one embodiment of the invention;

FIG. **2** is a block diagram representation of a load shed module according to one embodiment of the invention; and

FIG. **3** is a flowchart graphically illustrating operation of one embodiment of the load shed module.

## DETAILED DESCRIPTION OF THE PREFERRED EMBODIMENTS

The various features and advantageous details of the subject matter disclosed herein are explained more fully with reference to the non-limiting embodiments described in detail in the following description.

Referring to FIG. **1**, a load distribution system incorporating load shed modules **20** according to one embodiment of the invention is illustrated. A transfer switch **14** selectively connects a first power supply **10** or a second power supply **12** to one or more electrical loads **16**. The transfer switch **14** includes a first input configured to receive one or more electrical conductors from the first power supply **10** and a second input configured to receive one or more electrical conductors **11** from the second power supply **12**. Each power supply **10**, **12** may provide, for example, 120 VAC or 240 VAC via one or more hot leads and a neutral lead. Each of the hot leads and the neutral lead are defined by one of the electrical conductors **11** which may be bundled as a single electrical cable. A switch device in the transfer switch **14** is operable in a first mode to connect the first power supply **10** to each electrical load **16** and in a second mode to connect the second power supply **12** to one or more of the electrical loads **16**. The switch device may be manually or automatically activated to selectively connect one of the power supplies **10**, **12** to the loads **16**. According to the illustrated embodiment, the transfer switch **14** includes a distribution system to supply power to multiple loads **16**. The distribution system may include, for example, a series of conductive busses. Each hot lead from the power supplies **10**, **12** is connected to a corresponding hot bus and the neutral lead from the power supplies **10**, **12** is connected to a neutral bus. A load shed module **20** is connected in series between the transfer switch **14** and each load **16**. At least one hot lead and a neutral lead are connected from each bus to the loads **16**. A first load-side electrical conductor **15** is connected for each lead between the transfer switch **14** and the load shed module **20**, and a second load-side electrical conductor **17** is connected for each lead between the load shed module **20** and each load **16**.

Referring next to FIG. **2**, each load shed module **20** includes an input **22** configured to receive the first load-side electrical conductors **15** from the transfer switch and an output configured to connect to the second load-side electrical conductors **17** which is, in turn, connected to one of the loads **16**. A switch **26** is connected between the input **22** and the output **24**. The switch **26** may be an electronically activated, mechanical relay, a solid-state switch, or any other suitable switch according to the application requirements. The switch **26** includes at least two operating modes. In a first operating mode, the switch **26** connects the input **22** to the output **24** and establishes an electrical connection between the transfer switch **14** and the load **16**. In a second operating mode, the switch **26** disconnects the input **22** from the output **24** and breaks the electrical connection between the transfer switch **14** and the load **16**. As illustrated, separate load shed modules **20** are connected between the transfer switch **14** and each load **16**.

The load shed module **20** also includes a power section **30**. The power section **30** is connected to the input **22** and configured to receive power from either the first power supply **10** or the second power supply **12** according to which power supply **10**, **12** the transfer switch **14** is connecting to

the loads **16**. Optionally, the load shed module **20** may include a battery connected to the power section **30**. The power section **30** includes any power converters and/or voltage regulators that are required to provide power to each of the components in the load shed module **20**.

The load shed module **20** further includes a controller **32** to control operation of the switch **26**. The controller **32** may include discrete devices, such as operational amplifiers, logic devices, and the like. Optionally, the logic circuit may include one or more processors configured to operate separately or in parallel. Each processor may be a microprocessor or be implemented on a dedicated device, such as a field programmable gate array (FPGA) or application specific integrated circuit (ASIC). According to still another embodiment, the controller **32** may include a combination of discrete devices and a processor. The controller **32** is in communication with a memory device **34**. The memory device **34** may be a single device or multiple devices and may include persistent memory, non-persistent memory, or a combination thereof. According to yet another embodiment of the invention, the memory device **34** may be incorporated on a single device with the controller **32**. A sensor **25** is connected to the input **22** of the load shed module to generate a feedback signal **27** corresponding to the voltage present at the input **22**. The feedback signal **27** is connected to the controller **32** and, as discussed in more detail below, is used to generate a control signal **28** used to cause the switch **26** to transition between operating modes. The load shed module **20** also includes a priority selector **36**, configured to set a priority level for the load shed module **20**; an indicator **38**, configured to provide an audio and/or a visual indication of the operation of the load shed module **20**; and a lockout selector **40**, configured to manually enable and disable operation of the load shed module **20**.

In operation, each load shed module **20** is operable to disconnect its respective load **16** without communicating with the other load shed modules **20** when a generator overload condition is detected. Referring next to FIG. **3**, an exemplary sequence of steps for controlling operation of each load shed module **20** is illustrated. At step **50**, the controller **32** reads the feedback signal **27** corresponding to the voltage present at the input **22** of the load shed module **20**. The controller **32** may also store some or all of the values of the feedback signal **27** in the memory device **34**. At startup, the controller **32** may stay at step **50** for an initial duration, such as five seconds. During the initial duration, the controller **32** stores values of the feedback signal **27** read at a periodic rate, such as once every microsecond, in the memory device **34**. From the stored values, the controller **32** may determine, for example, a magnitude and/or frequency of the voltage present at the input **22** of the load shed module **20**. A buffer may be defined in the memory device **34** which is filled during this initial duration and which, during subsequent operation, may become a first-in, first-out (FIFO) buffer. The controller **32** continually stores new values of the feedback signal **27** in the FIFO buffer while removing or over-writing the oldest values.

From the feedback signal **27**, the controller **32** determines a frequency of the voltage present at the input **22** of the load shed module **20**. The frequency may be determined, for example, by detecting minimum values, maximum values, or zero-crossings of the voltage present at the input **22** and determining the time between subsequent instances of the corresponding minimum value, maximum value, or zero-crossing. These values may be detected utilizing dedicated detection circuits or by inspection of the buffer in the memory device **34**. Optionally, the controller **32** may utilize any other suitable method, as would be understood in the art, to determine the frequency of the voltage at the input **22** based on the measured values and a sequence of stored measurements of the voltage. The frequency value may be determined for each cycle of the voltage or may be filtered and/or averaged over multiple cycles of the voltage at the input **22**. The controller **32** further saves a minimum frequency and a maximum frequency detected over a predefined duration, such as the duration of the FIFO buffer (e.g., a five second interval).

The controller **32** utilizes the frequency measurement of the input voltage to determine whether utility power or a backup generator is connected to the input **22** of the load shed module **20**. When utility power is connected, the controller **32** expects a "stiff" input voltage, meaning that the frequency and amplitude of the voltage have little variation. According to one embodiment of the invention, the controller **32** may indicate that the utility is connected if the frequency remains within four tenths of a hertz (i.e., +/−0.4 Hz) of the expected frequency (e.g. 50 or 60 Hz). Preferably, the frequency remains within two hundredths of a hertz (i.e., +/−0.02 Hz). If the frequency of the measured input voltage remains within the expected frequency range, the controller **32** determines that the utility power is connected to the load shed module **20**. When the backup generator is connected, the controller **32** expects a "soft" input voltage, meaning that the frequency and/or amplitude of the voltage may have greater variation than when the utility power is connected. According to one embodiment of the invention, the controller **32** expects the frequency to vary about seven-tenths of a hertz when the generator is connected to the input **22**. At step **52**, the controller **32** utilizes the frequency measurement and the expected stiff or soft input voltages to determine whether the generator is connected. The controller **32** may utilize a short term variation in frequency, a long term variation in frequency, or a combination thereof to determine whether the generator is connected. In order to determine the variation in frequency, the controller **32** finds the difference between the minimum frequency and the maximum frequency as stored in the memory device **34**. If the difference exceeds, for example, three-tenths of a hertz (+/−0.3 Hz) at any point during the predefined duration of frequency measurements, the controller **32** detects a short term deviation and indicates the generator is connected. Optionally, if the frequency measurement remains more than two-tenths of a hertz (+/−0.2 Hz) away from the nominal frequency (e.g., 50 or 60 Hz) for one second or more, the controller **32** detects a long term deviation and indicates the generator is connected. Thus, either a quick fluctuation in the frequency or a continuous drift away from the nominal frequency indicates that the generator is connected. In some applications, the generator may have sufficient capacity and/or include internal control routines that regulate the output of the generator to provide a stiff output voltage. In these applications, the generator may be configured to generate an output voltage outside of the detection parameters at a periodic interval such that the load shed module **20** may detect that a generator is connected to the input **22** of the module **20**.

If, at step **52**, the controller **32** determines that the generator is not connected and, therefore, that the utility power is connected. At step **54**, the controller **32** monitors the feedback signal **27** to determine whether the utility power is within normal operating parameters. The controller **32** may compare the frequency of the input voltage to a utility threshold to determine whether the input frequency is within an expected operating range when utility power is

connected. According to one embodiment of the invention, the utility threshold is selected at two-tenths of a hertz (i.e., 0.2 Hz). If the frequency of the input voltage is outside of this range (i.e., +/−0.2 Hz) for a predefined time, such as one second, the controller **32** indicates that the utility input is not within normal operating parameters. Optionally, the controller **32** may monitor the difference between the minimum frequency and the maximum frequency of the measured input voltage. If the difference exceeds, for example, one-tenth of a hertz (i.e., 0.1 Hz), the controller **32** may also indicate that the utility is not within the normal operating parameters. As long as the utility remains within normal operating parameters, the controller **32** loops back to step **54** and continues to monitor operation of the utility input. While the utility power is within normal operating parameters and the controller **32** is monitoring operation of the utility power, the load shed module **20** may be considered to be in a running operating mode.

If the controller **32** detects that the utility input is outside of the normal operating parameters while in the running operating mode, the controller **32** determines whether the load shed module **20** may stay in a running operating mode or transition to a disconnected operating mode. At step **56**, the controller **32** determines whether the utility input has recovered. The controller **32** may utilize the same criteria used at step **54** to determine whether utility power was within normal operating parameters, and when the feedback signal **27** indicates that the utility power is again operating normally, the controller loops back to step **54**. While the utility power has failed or is outside of normal operating parameters, a backup generator, connected as the second power supply **12**, and/or the transfer switch **14** may similarly be monitoring the utility voltage to detect failures in the utility power supply. The generator controller may start-up the generator and generate a signal to the transfer switch **14** to connect the second power supply **12** to the loads **16**. Thus, at step **58**, the controller **32** determines whether the generator is running within normal operating parameters. During the initial start-up of the generator, the generator may be outside of its normal operating parameters. Thus, at step **60**, the controller **32** executes a run timer **60**. At step **62**, the controller **32** determines whether the generator has started up within the duration of the run-timer. If so, the controller **32** loops back to step **56** to monitor for the utility power being reestablished and to monitor that the generator remains within normal operating parameters. Thus, the controller **32** may keep the loads **16** connected and remain in the running operating mode during a transition from the first power supply **10** (e.g., utility power) to the second power supply **12** (e.g., a backup generator).

While the generator is running and the load shed module **20** is in the running operating mode, the controller **32** monitors the input feedback signal **27** to verify that the generator is within normal operating parameters. If, for example, a sudden change in the loads **16** occurs, the speed of the generator and, subsequently, the frequency of the output voltage may change. If a load **16** is added, the speed of the generator may slow down and, if a load **16** of sufficient magnitude is added, the generator may stall. If a small change in the frequency of the feedback signal **27** is detected, a small change in the loads **16** may be indicated and it is likely the generator will be able to resume normal operation. If a large change in the frequency of the feedback signal **27** is detected, a large change in the loads **16** may be indicated and the generator may or may not be able to resume normal operation. Thus, the controller **32** may allow a small change in the output frequency to continue without shedding a load **16** for a longer duration than if a large change in the frequency of the feedback signal **27** is detected. According to one embodiment of the invention, if, at step **58**, the controller **32** detects that the frequency of the feedback signal **27** has dropped at least two hertz (e.g., less than 58 Hz for a 60 Hz nominal frequency), the run timer may be executed with a first duration, such as three and one-half seconds. If, at step **58**, the controller **32** detects that the frequency of the feedback signal **27** has dropped more than eight hertz (e.g., less than 52 Hz for a 60 Hz nominal frequency), the run timer may be executed with a second duration, such as one second. If at the end of the run timer, the controller **32** detects that the generator has recovered such that the frequency of the feedback signal **27** is within two hertz or within eight hertz, the controller **32** returns to step **56**. If, however, the controller **32** detects that the frequency of the feedback signal **27** remains outside the normal operating range for the generator, the controller **32** generates the control signal **28** to open the switch and shed the load **16** connected to the load shed module **20**, as indicated at step **64**.

Upon shedding the load **16**, the load shed module **20** enters a waiting operating condition. The waiting operating condition may similarly be entered during the initial power-up of the load shed module **20** or if the controller **32** detects that the generator is connected rather than utility power being connected at step **52**. At step **66**, the controller **32** evaluates the feedback signal **27** to determine whether the utility power supply has returned to normal operating conditions. The controller **32** may utilize the same criteria used at step **54** to determine whether utility power was within normal operating parameters, and when the feedback signal **27** indicates that the utility power is again operating normally, the controller loops back to step **54**. If the load shed module **20** is in the waiting operating condition and the utility power has not returned to normal, a start delay is executed. According to one embodiment of the invention, the delay is equal to five minutes plus an extra interval set according to the priority level of the load shed module **20**. The priority level is set according to the priority selector **36**. The priority selector **36** may be, for example, a series of DIP switches, a multi-position selector switch, a voltage divider circuit generating a known reference voltage, or any other suitable device to provide an input to the controller **32** corresponding to a desired priority level. According to one embodiment of the invention, the priority selector **36** may be configurable in the field. Optionally, the priority selector may be configured by a technician prior to installation. The controller **32** may read a duration from the memory device **34** as a function of the priority level input. For example, a look-up table may be stored in the memory device **34** storing different start-up durations for each priority level. Optionally, the controller **32** may use a fixed duration and multiply the fixed duration times the priority level. For example, a fixed duration of five seconds may be used. If the priority level of the load shed module **20** is one, the total duration is five seconds, and if the priority level of the load shed module **20** is two, the total duration is ten seconds, and so on for increasing priority levels. While the start-up delay is executing, the load shed module **20** remains in the waiting operating condition and executes steps **66** and **68**.

When the start-up delay is done executing, the controller **32** checks the feedback signal **27** to determine whether the frequency of the voltage at the input **22** of the load shed module is within a normal operating range, as shown in step **70**. According to one embodiment of the invention, the controller **32** checks that the frequency of the feedback

signal **27** is at least within two hertz of the nominal frequency (i.e., >=58 Hz for a 60 Hz nominal frequency). If the frequency of the feedback signal **27** is more than two hertz below the nominal frequency, the controller **32** determines that the generator is not operating normally and resets the start timer, as shown in step **72**. The load shed module **20** may remain in the waiting operating mode until it detects either that one of the power supplies **10**, **12** (e.g., the utility power or the generator) are operating within normal operating parameters. Once the controller **32** detects that one of the power supplies **10**, **12** is operating within normal operating parameters, the controller **32** generates the control signal **28** to close the switch **26** connecting the load **16** at the output **24** of the load shed module **20** to the power supply **10**, **12** connected to the input **22**, as shown in step **74**. After enabling the load shed module **20**, the controller **32** then enters a transitional operating mode.

In the transitional operating mode, the controller **32** verifies that the load **16** which was just connected to the power supply **10**, **12** does not negatively impact operation of the power supply **10**, **12**. In particular, the controller **32** verifies that a step change in load **16** when a generator is connected to the load shed module **20** does not cause the generator to slow excessively or stall. At step **76**, the controller **32** monitors the feedback signal **27** to determine whether the generator is within normal operating parameters. The detection sequence is similar to that discussed above with respect to step **58**. If a small change in the frequency of the feedback signal **27** is detected, a small change in the loads **16** may be indicated and it is likely the generator will be able to resume normal operation. If a large change in the frequency of the feedback signal **27** is detected, a large change in the loads **16** may be indicated and the generator may or may not be able to resume normal operation. Thus, the controller **32** may allow a small change in the output frequency to continue without shedding a load **16** for a longer duration than if a large change in the frequency of the feedback signal **27** is detected. According to one embodiment of the invention, if, at step **76**, the controller **32** detects that the frequency of the feedback signal **27** has dropped at least two hertz (e.g., less than 58 Hz for a 60 Hz nominal frequency), the transient timer (step **78**) may be executed with a first duration. If, at step **76**, the controller **32** detects that the frequency of the feedback signal **27** has dropped more than eight hertz (e.g., less than 52 Hz for a 60 Hz nominal frequency), the transient timer (step **78**) may be executed with a second duration. During the transitional operating mode, the first and second durations of the transient timers are configured to be shorter than the first and second durations of the run timers. According to one embodiment of the invention, the first and second duration of the transient timer is one-half second shorter than the corresponding duration of the run timer. As a result, if one or more load shed modules **20** have already connected their respective loads **16** to the power supply **10**, **12**, the timer executing in the load shed module **20** that has most recently connected its load **16** to the power supply **10**, **12** will complete prior to the timers executing in the load shed modules **20** that have previously connected loads **16**. Thus, the additional load **16** that results in generator operation outside of its normal operating range is removed prior to other loads **16** being removed. At step **80**, the controller **32** checks whether the generator has recovered from the additional load **16**. If the controller **32** detects that the generator has recovered such that the frequency of the feedback signal **27** is within two hertz or within eight hertz, the controller **32** switches from the transitional operating mode to the running operating mode and begins execution at step **56**. If, however, the controller **32** detects that the frequency of the feedback signal **27** remains outside the normal operating range for the generator, the controller **32** generates the control signal **28** to open the switch and shed the load **16** connected to the load shed module **20**, as indicated at step **82**.

In order to prevent repeated attempts to connect a load **16** to the generator that will result in an undesirable performance of the generator, the load shed module **20** enters a lock out operating mode after shedding a load during the transitional operating mode. As shown in steps **84** and **86**, the lock out operating mode executes a delay loop to prevent another connection attempt. A lock out timer is executed that has, for example, a one-half hour duration. At step **84**, the controller **32** determines whether the lock out timer has completed execution. If not, the controller **32** also determines whether the feedback signal **27** indicates the utility power supply has resumed normal operation, as shown in step **86**. If neither condition has occurred, the controller **32** loops back to step **84** to again check whether the lock out time is done executing.

When the lock out time is done executing, the controller **32** returns to step **74** and again generates the control signal **28** to close the switch **26** and again attempt to connect the load **16** to the power supply connected to the load shed module **20**. The additional delay time from the lock out timer may permit, for example, the combination of loads **16** present to change such that the load **16** connected to the load shed module **20** exiting the lock out operating mode to be successfully connected to the power supply. If during the execution of the lock out timer, the utility power supply recovers, the controller **32** may switch from the lock out operating mode to the running operating mode and continue execution at step **54**. Further, a manual lockout selector **40** may be used to keep the load shed module **20** in the lock out operating mode such that the controller **32** continually generates a control signal **28** which opens the switch **26** between the input **22** and the output **24**. The sequence of steps described above with respect to FIG. **3**, describe one embodiment of the present invention. It is understood that various steps may be executed in different orders, for different durations, and using different thresholds without deviating from the scope of the invention.

With reference again to FIG. **1**, multiple load shed modules **20** are provided in a load distribution system. Each load shed module **20** is connected between the transfer switch **14** and one of the loads **16** in the system. Each of the load shed modules **20** executes the series of steps discussed above with respect to FIG. **3** independently of the other. However, each load shed module **20** is monitoring the same voltage at its respective input **22** and, therefore, receives the same variations in conditions and/or transitions between power supplies **10**, **12**. Although there may be some variation in time for execution of individual steps due, for example, to manufacturing tolerances in sensing circuits and clock signal generation, each load shed module **20** ends up executing the steps at generally the same time. As a result, the priority level at which each load shed module **20** is set will cause the load shed module to enable its respective load **16** at a different time than the other load shed modules **20**. It is contemplated that a set of load shed modules **20** may be configured for each distribution system where the priority selector **36** for each load shed module **20** is set to a different priority level. Optionally, multiple load shed modules **20** may be set to the same priority level if the total value of the loads **16** connected to each load shed module **20** is not expected to have a negative impact on the generator. Accord-

ing to still another embodiment of the invention, the priority selectors **36** may be configurable in the field and the priority level set when the load shed modules **20** are installed.

Because each load shed module **20** executes independently, it may be installed independently of the other modules **20** as well. It is contemplated that all of the load shed modules **20** may be installed at a common location, for example, proximate to a distribution panel at which utility power enters a facility and proximate to a transfer switch receiving the utility power and the input from a backup generator. Optionally, one or more of the load shed modules **20** may be mounted proximate to the load **16** to which it is to be connected. For example, the load shed module **20** may be connected next to an electrical connection for a furnace, oven, or other electronic device. Because the transfer switch **14** controls which power supply **10**, **12** is connected to the load shed module **20** and the load shed module **20** monitors the voltage at the input **22** to determine which power supply is connected, the load shed module **20** needs no control signal from the transfer switch, generator, or other system controller. Similarly, the differing priority levels permit each load shed module **20** to execute without communication between other load shed modules **20**.

It should be understood that the invention is not limited in its application to the details of construction and arrangements of the components set forth herein. The invention is capable of other embodiments and of being practiced or carried out in various ways. Variations and modifications of the foregoing are within the scope of the present invention. It also being understood that the invention disclosed and defined herein extends to all alternative combinations of two or more of the individual features mentioned or evident from the text and/or drawings. All of these different combinations constitute various alternative aspects of the present invention. The embodiments described herein explain the best modes known for practicing the invention and will enable others skilled in the art to utilize the invention

We claim:

**1**. A method of reconnecting a load to a power source in a power distribution system after shedding the load, comprising the steps of:

reading a feedback signal corresponding to an alternating current (AC) voltage received at an input of a load shed module from the power source;

determining a frequency of the AC voltage from the feedback signal with a controller in the load shed module;

determining whether the AC voltage at the input of the load shed module is from a utility power source or from a backup power source based on the frequency of the AC voltage;

closing a switch connected in series between the input and an output of the load shed module when the frequency of the AC voltage at the input is within a frequency range, wherein the output of the load shed module is connected to the load, and wherein the switch is connected between a transfer switch and the load; and

keeping the switch open when the frequency of the AC voltage at the input is outside the frequency range.

**2**. The method of claim **1**, wherein the closing the switch connected in series between the input and an output of the load shed module includes:

determining that a delay period has passed; and

closing the switch connected in series between the input and an output of the load shed module.

**3**. The method of claim **1**, wherein the determining whether the AC voltage at the input of the load shed module is from the utility power source or from the backup power source based on the frequency of the AC voltage includes:

determining whether the frequency of the AC voltage at the input of the load shed module is within the frequency range; and

determining that the AC voltage at the input of the load shed module is from the utility power source when the frequency is within the frequency range, while determining that the AC voltage at the input of the load shed module is from the backup power source when the frequency is outside the first frequency range.

**4**. The method of claim **1**, wherein the determining whether the AC voltage at the input of the load shed module is from the utility power source or from the backup power source based on the frequency of the AC voltage includes:

determining a minimum frequency of the AC voltage at the input of the load shed module over a measurement period;

determining a maximum frequency of the AC voltage at the input of the load shed module over the measurement period;

determining a difference between the minimum frequency and the maximum frequency; and

determining that the AC voltage at the input of the load shed module is from the utility power source when the difference is equal to or smaller than a threshold difference, while determining that the AC voltage at the input of the load shed module is from the backup power source when the difference is greater than the threshold difference.

**5**. The method of claim **1**, wherein the determining the frequency of the AC voltage includes:

detecting a first peak of the AC voltage;

detecting a second peak of the AC voltage, the second peak being next to the first peak; and

determining the frequency of the AC voltage based on the first peak of the AC voltage and the second peak of the AC voltage.

**6**. The method of claim **1**, wherein the backup power source is a backup generator.

**7**. A load shed module configured to be connected in series between a transfer switch and a load, the load shed module comprising:

an input configured to receive a first electrical connection from the transfer switch;

an output configured to provide a second electrical connection for the load;

a switch operatively connected in series between the input and the output, wherein the switch is configured to be connected between the transfer switch and the load, and wherein the switch receives a control signal to selectively control the switch;

a sensor configured to generate a feedback signal corresponding to an alternating current (AC) voltage at the input;

a controller connected to the sensor to receive the feedback signal, and connected to the switch to supply the control signal, wherein the controller is operable to:

determine whether the AC voltage at the input of the load shed module is from a utility power source or from a backup power source based on a frequency of the AC voltage;

close the switch when the frequency of the AC voltage at the input is within an expected frequency range; and

keep the switch open when the frequency of the AC voltage at the input is outside the expected frequency range.

**8**. The load shed module of claim **7**, wherein the operation to close the switch includes:

determine that a delay period has passed; and

close the switch.

**9**. The load shed module of claim **7**, wherein the operation to determine whether the AC voltage at the input of the load shed module is from the utility power source or from the backup power source based on the frequency of the AC voltage includes:

determine whether the frequency of the AC voltage at the input of the load shed module is within the expected frequency range; and

determine that the AC voltage at the input of the load shed module is from the utility power source when the frequency is within the expected frequency range, while determining that the AC voltage at the input of the load shed module is from the backup power source when the frequency is outside the expected frequency range.

**10**. The load shed module of claim **7**, wherein the operation to determine whether the AC voltage at the input of the load shed module is from the utility power source or from the backup power source based on the frequency of the AC voltage includes:

determine a minimum frequency of the AC voltage at the input of the load shed module over a measurement period;

determine a maximum frequency of the AC voltage at the input of the load shed module over the measurement period;

determine a difference between the minimum frequency and the maximum frequency; and

determine that the AC voltage at the input of the load shed module is from the utility power source when the difference is equal to or smaller than a threshold difference, while determining that the AC voltage at the input of the load shed module is from the backup power source when the difference is greater than the threshold difference.

**11**. The load shed module of claim **7**, wherein the frequency of the AC voltage at the input is obtained by detecting a first peak of the AC voltage and a second peak of the AC voltage, the second peak being next to the first peak.

**12**. The load shed module of claim **7**, wherein the backup power source is a backup generator.

**13**. A load shed module configured to be connected in series between a transfer switch and a load, the load shed module comprising:

an input configured to receive a first electrical connection from the transfer switch;

an output configured to provide a second electrical connection for the load;

a switch operatively connected in series between the input and the output, wherein the switch is configured to be connected between a transfer switch and the load, and wherein the switch receives a control signal to selectively control the switch;

a sensor configured to generate a feedback signal corresponding to an alternating current (AC) voltage at the input;

a controller connected to the sensor to receive the feedback signal, and connected to the switch to supply the control signal, wherein the controller is operable to:

determine whether the AC voltage is from a utility power source or a backup power source based on a frequency of the AC voltage at the input; and

when the AC voltage is from the utility power source, generate the control signal to close the switch.

**14**. The load shed module of claim **13**, wherein the operation to generate the control signal to close the switch when the AC voltage is from the utility power source includes:

when the AC voltage is from the utility power source, determine that the frequency of the AC voltage is within an expected frequency range for a first period of time; and

generate the control signal to close the switch.

**15**. The load shed module of claim **13**, wherein the operation to determine whether the AC voltage is from the utility power source or the backup power source based on the frequency of the AC voltage at the input includes:

determine whether the frequency of the AC voltage is within an expected frequency range; and

determine that the AC voltage is from the utility power source when the frequency is within the expected frequency range, while determine that the AC voltage is from the backup power source when the frequency is outside the expected frequency range.

**16**. The load shed module of claim **13**, the operation to determine whether the AC voltage is from the utility power source or the backup power source based on the frequency of the AC voltage present at the input includes:

determine a minimum frequency of the AC voltage over a measurement period;

determine a maximum frequency of the AC voltage over the measurement period;

determine a difference between the minimum frequency and the maximum frequency; and

determine that the AC voltage is from the utility power source when the difference is equal to or smaller than a threshold difference, while determine that the AC voltage is from the backup power source when the difference is greater than the threshold difference.

**17**. The load shed module of claim **13**, wherein the frequency of the AC voltage at the input is obtained by detecting a first peak of the AC voltage and a second peak of the AC voltage, the second peak being next to the first peak.

**18**. The load shed module of claim **13**, wherein the backup power source is a backup generator.

* * * * *